SUZUKI

PARTS CATALOGUE

DF70A/80A/90A/100B

DF70A/ATH
DF80A
DF90A/ATH/AWQH
DF100B

SUZUKI

Way of Life!

OUTBOARD MOTOR

E01/E40

2020-3

2ND EDITION

PREFACE

When it becomes necessary to replace parts on SUZUKI OUTBOARD MOTORS, always use SUZUKI GENUINE PARTS which have passed a strict inspection which guarantees quality and performance.

This parts catalogue covers the list of all service parts for SUZUKI DF70A/80A/90A/100B production start 2019.

INSTRUCTIONS FOR QUOTING THE CATALOGUE

1. DIMENSIONS

Dimensions of the parts in this catalogue are indicated in unit millimeters.

2. ABBREVIATIONS

Abbreviations used in this catalogue are as follows:

AR	: As required	NT	: Number of teeth
ASSY	: Assembly	OPT	: Optional
E.NO.	: Engine number	OS	: Over size
F.NO.	: Frame number	STD	: Standard
D	: Diameter of material	T	: Thickness
ID	: Inside diameter	US	: Under size
OD	: Outside diameter	W	: Width
L	: Length	W/	: With
LH(PORT)	: Left hand side	L,X	: Transom type
RH(STBD)	: Right hand side	SUS	: Stainless steel
～031234	: Up to E.No.09003F-031234	PTT	: Power trim and tilt
031234～	: From E.No.09003F-031234		

12 x 34 x 5.6…… Figures in the description column show the dimensions of parts.
ID OD T(or W,L)

→12345-56781 (Parts No.) : indicates that the parts number was changed to 12345-56781 and the new parts are interchangeable with the former ones but the former ones are not interchangeable with new ones.

←12345-56781 (Parts No.) : indicates that the former and new parts are interchangeable with each other and both are usable.

3. INNER PARTS OF ASSEMBLY

Part name with a dot (.) in front as shown in the description column indicates the component of the assembly also available individually.

4. MODIFICATION NOTICE

A parts bulletin will be sent to you on all occasions when changes in parts occur, including interchangeable modifications between new parts and old ones.

5. NOTE

5-1. There are some different parts from those of production models among spare parts for the administrative reasons and common use of them with other models.

5-2. In respect of rubber hoses and vinyl tubes, please be sure to use them by cutting off according to the length mentioned on parts catalogue or what is actually required on the vehicle.

5-3. Note that the drawings on the illustration page are for ready reference of spare parts number, not to be used as an assembly manual. When assembling, use "SUZUKI SERVICE MANUAL".

6. MODEL NAME AND ENGINE NUMBER

MODEL	DESTINATION	TYPE	TRANSOM	COLOR	ENGINE No.
DF70AT	E01,E40	07003F	L,X	YAY,Y5S	07003F-040001～
DF70ATH	E01,E40	07003F	L,X	YAY	07003F-040001～
DF80AT	E01,E40	08002F	L,X	YAY	08002F-040001～
DF90AT	E01,E40	09003F	L,X	YAY,Y5S	09003F-040001～
DF90ATH	E01,E40	09003F	L,X	YAY	09003F-040001～
DF90AWQH	E40	09003F	L,X	YAY	09003F-140001～
DF100B	E01,E40	10004F	L,X	YAY,Y5S	10004F-040001～

MILLIMETER → INCH CONVERSION CHART

	0	1	2	3	4	5	6	7	8	9
00	.000	.039	.079	.118	.157	.197	.236	.276	.315	.354
10	.394	.433	.472	.512	.551	.591	.630	.669	.709	.748
20	.787	.827	.866	.906	.945	.984	1.024	1.063	1.102	1.142
30	1.181	1.220	1.260	1.299	1.339	1.378	1.417	1.457	1.496	1.535
40	1.575	1.614	1.654	1.693	1.732	1.772	1.811	1.850	1.890	1.929
50	1.969	2.008	2.047	2.087	2.126	2.165	2.205	2.214	2.283	2.323
60	2.362	2.402	2.441	2.480	2.520	2.559	2.598	2.638	2.677	2.717
70	2.756	2.795	2.835	2.874	2.913	2.953	2.992	3.031	3.071	3.110
80	3.150	3.189	3.228	3.268	3.307	3.346	3.386	3.425	3.465	3.504
90	3.543	3.583	3.622	3.661	3.701	3.740	3.780	3.819	3.858	3.898

How to read

	0	1	2	3	4
00	…	…	…	…	…
10	…	…	…	…	…
20	…	…	…	0.906	…
30	…	…	…	…	…

23 millimeters equal 0.906 inch

Contents are subject to change without notice or obligation.

FIG.111A

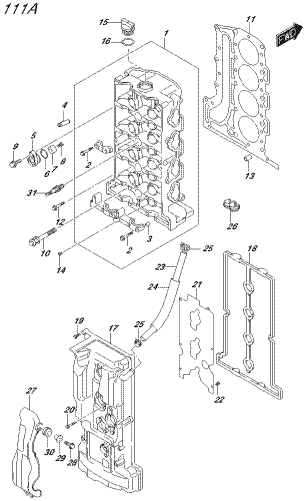

DF90A_E01_020_111A
CYLINDER HEAD

FIG.111B

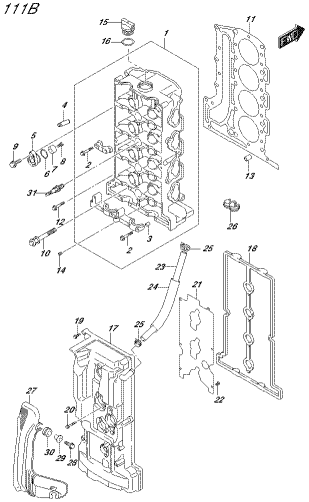

DF90A_E01_020_111B
CYLINDER HEAD

FIG.113A

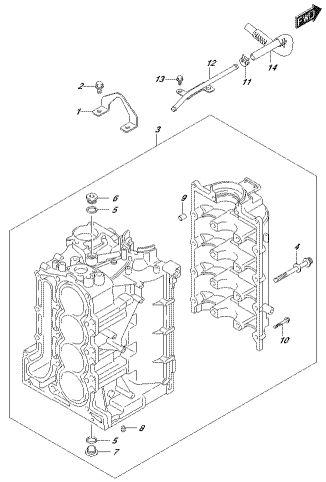

DF90A_E01_020_113A
CYLINDER BLOCK

FIG.116A

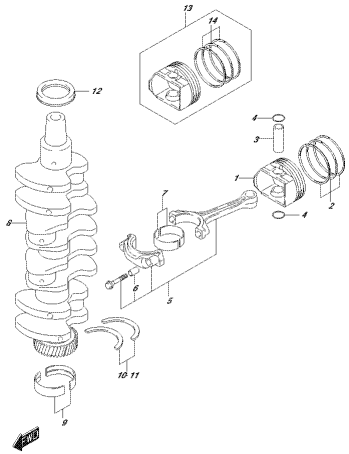

DF90A_E01_020_116A
CRANKSHAFT

FIG.119A

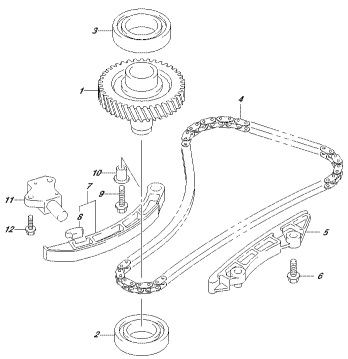

DF90A_E01_020_119A
TIMING CHAIN

FIG.121A

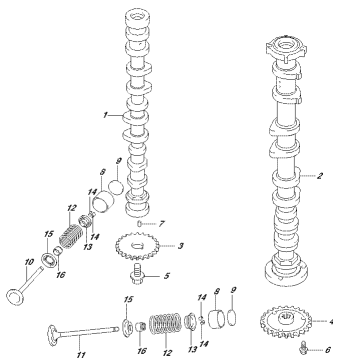

DF90A_E01_020_121A
CAMSHAFT

FIG.121B

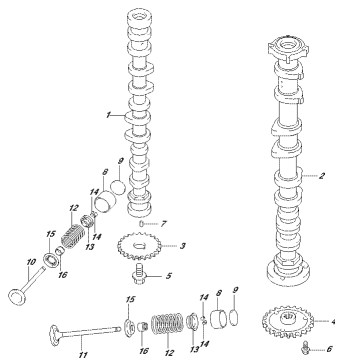

DF90A_E01_020_121B
CAMSHAFT

FIG.121C

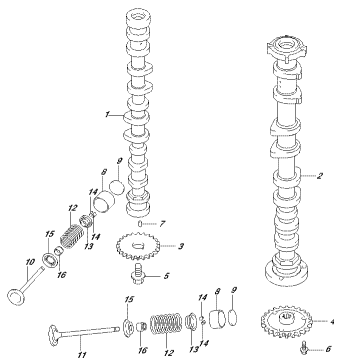

DF90A_E01_020_121C
CAMSHAFT

FIG.122A

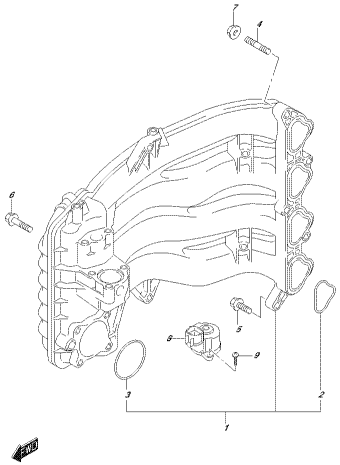

DF90A_E01, 02D, 122A
INTAKE MANIFOLD

FIG.134A

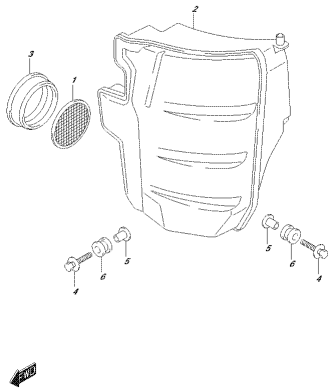

DF90A_E01, 02D, 134A
SILENCER

FIG.136A

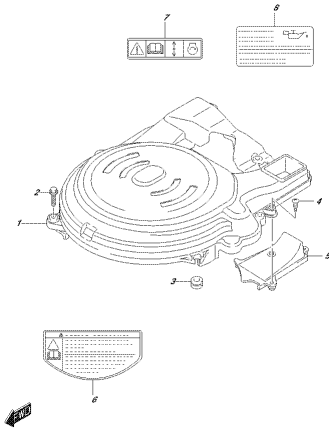

DF90A_E01, 02D, 136A
RING GEAR COVER

FIG.140A

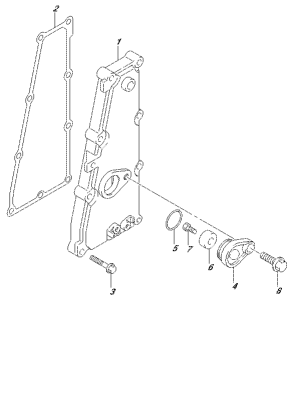

DF90A_E01, 02D, 140A
EXHAUST COVER

FIG.143A

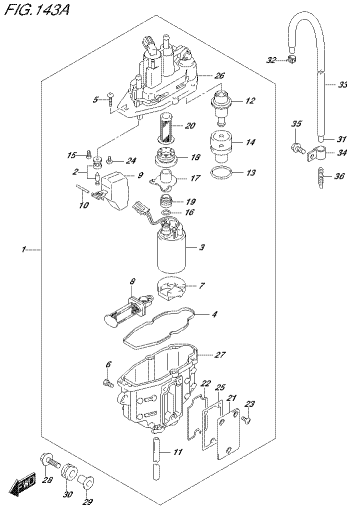

DF90A_E01, 02D, 143A
FUEL VAPOR SEPARATOR

FIG.143B

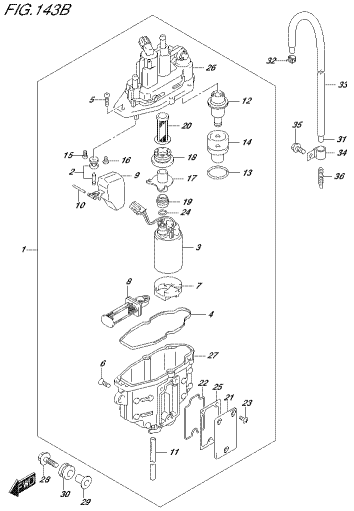

DF90A_E01, 02D, 143B
FUEL VAPOR SEPARATOR

FIG.144A

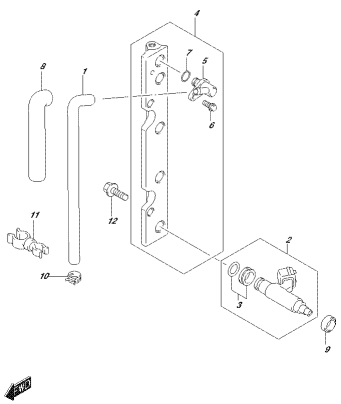

DF90A_E01, 02D, 144A
FUEL INJECTOR

FIG.144B

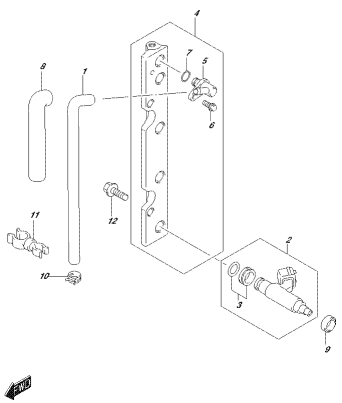

DF90A_E01, 02D, 144B
FUEL INJECTOR

FIG.146A

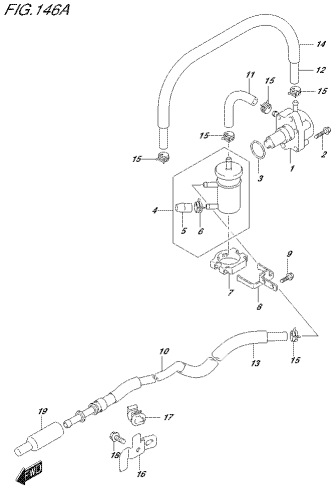

DF90A_E01, 02D, 146A
FUEL PUMP

FIG.146B

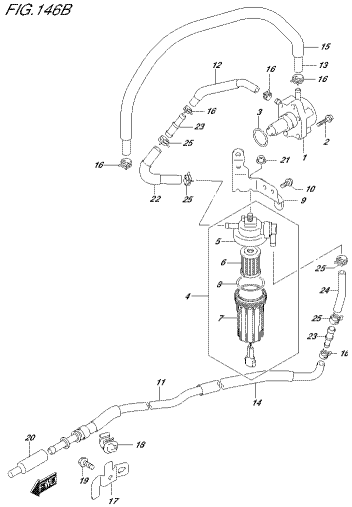

DF90A_E01, 02D, 146B
FUEL PUMP

FIG.160A

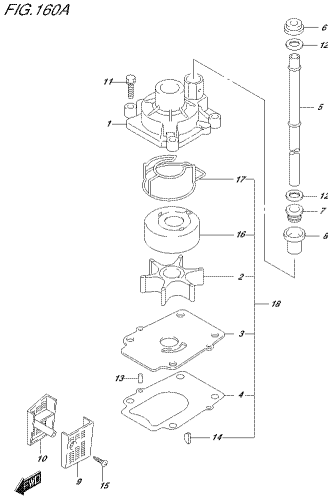

DF90A_E01, 02D, 160A
WATER PUMP

FIG.160B

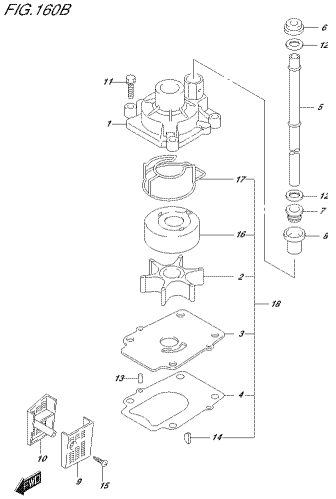

DF90A_E01, 02D, 160B
WATER PUMP

FIG.160C

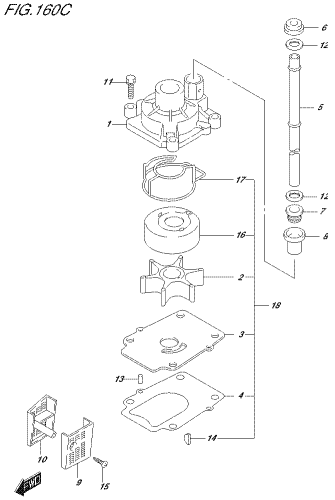

DF90A_E01, 02D, 160C
WATER PUMP

FIG.160D

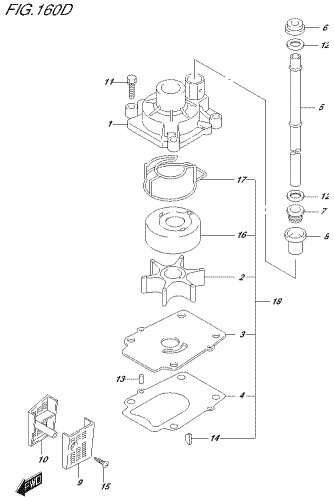

DF90A_E01, 02D, 160D
WATER PUMP

FIG.160E

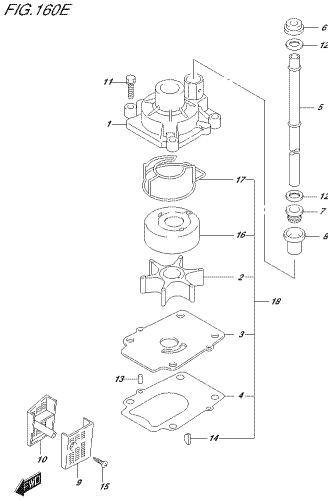

DF90A_E01, 02D, 160E
WATER PUMP

FIG.160F

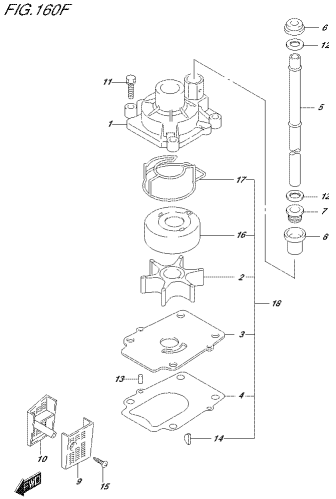

DF90A_E01, 02D, 160F
WATER PUMP

FIG.160G

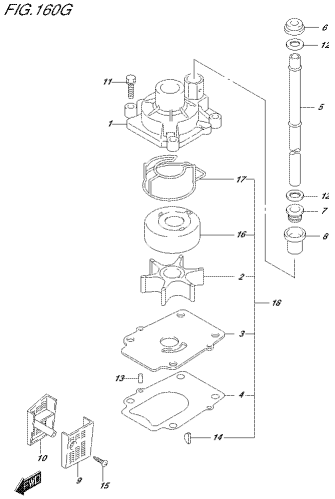

DF90A_E01, 02D, 160G
WATER PUMP

FIG.160H

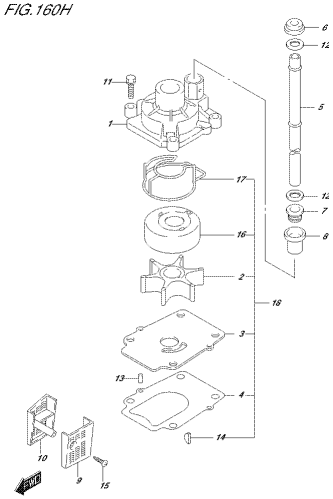

DF90A_E01, 02D, 160H
WATER PUMP

FIG.160J

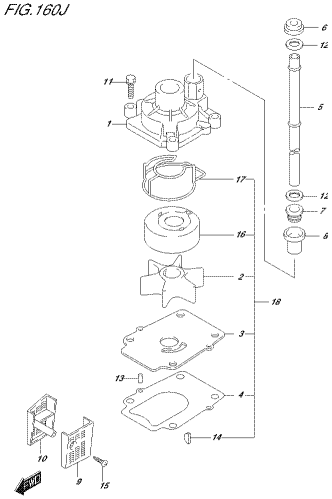

DF90A_E01, 02D, 160J
WATER PUMP

FIG.160K

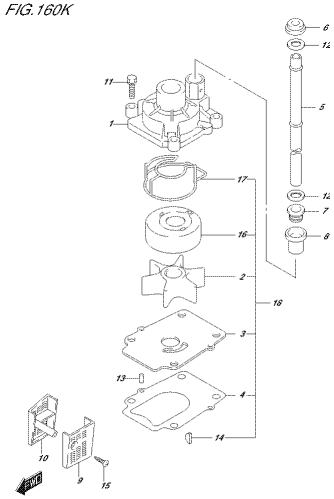

DF90A_E01, 02D, 160K
WATER PUMP

FIG.162A

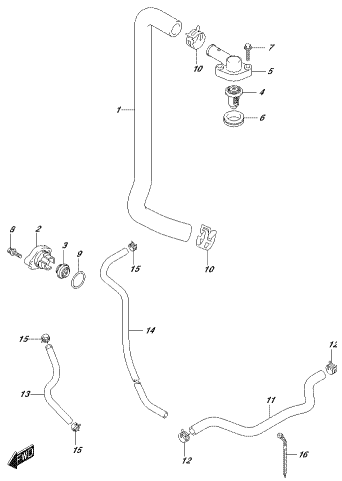

DF90A_E01, 02D, 162A
THERMOSTAT

FIG.162B

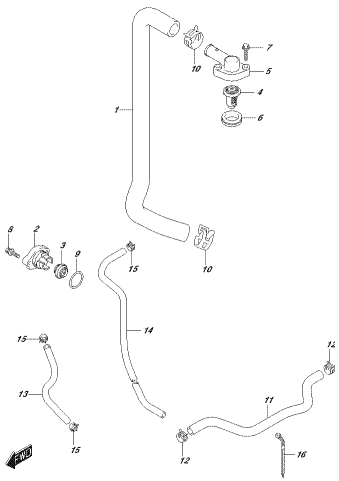

DF90A_E01, 02D, 162B
THERMOSTAT

FIG.163A

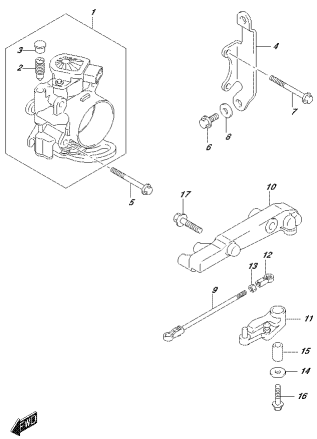

DF90A_E01, 02D, 163A
THROTTLE BODY

FIG.163B

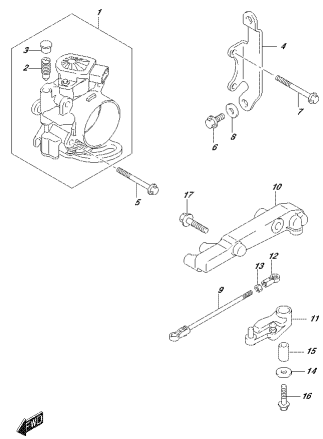

DF90A_E01, 02D, 163B
THROTTLE BODY

FIG.175A

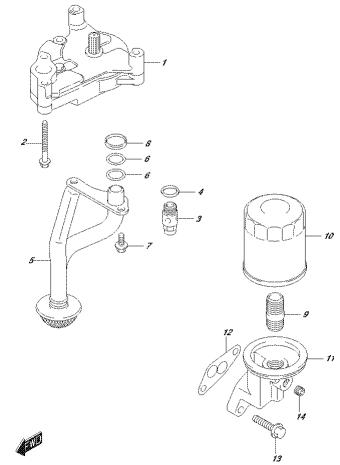

DF90A_E01_020_175A
OIL PUMP

FIG.180A

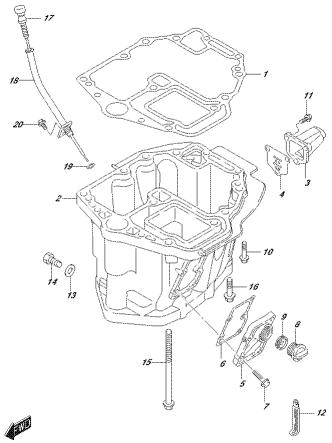

DF90A_E01_020_180A
OIL PAN

FIG.180B

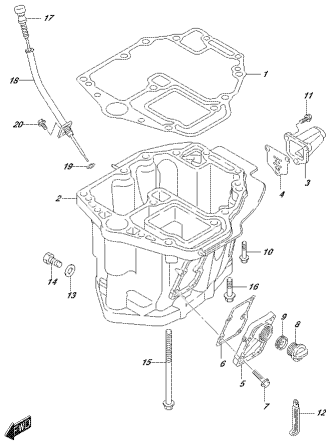

DF90A_E01_020_180B
OIL PAN

FIG.204A

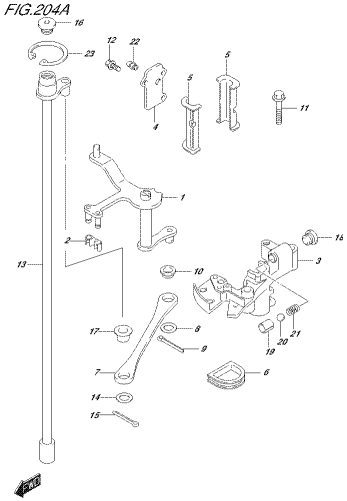

DF90A_E01_020_204A
CLUTCH SHAFT

FIG.204B

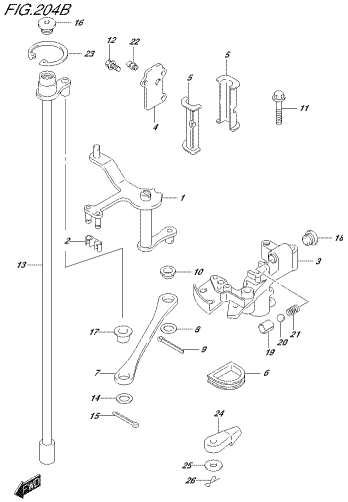

DF90A_E01_020_204B
CLUTCH SHAFT

FIG.204C

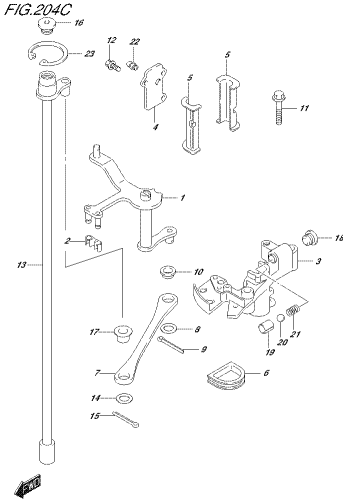

DF90A_E01_020_204C
CLUTCH SHAFT

FIG.206A

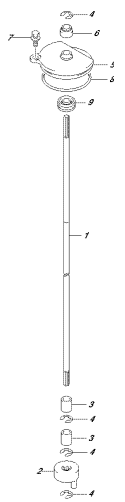

DF90A_E01_020_206A
CLUTCH ROD

FIG.206B

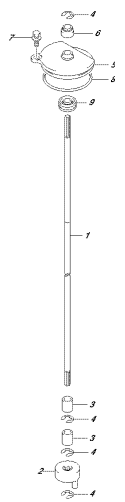

DF90A_E01_020_206B
CLUTCH ROD

FIG.206C

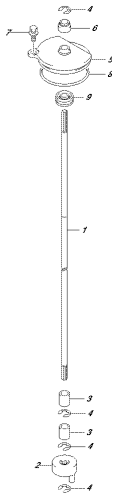

DF90A_E01_020_206C
CLUTCH ROD

FIG.220A

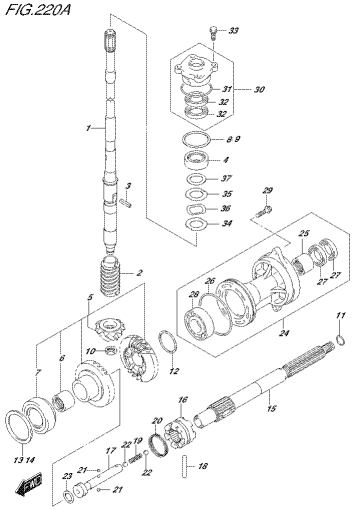

DF90A_E01_020_220A
TRANSMISSION

FIG.220B

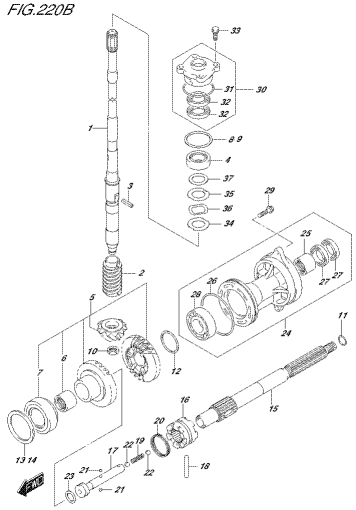

DF90A_E01_020_220B
TRANSMISSION

FIG.220C

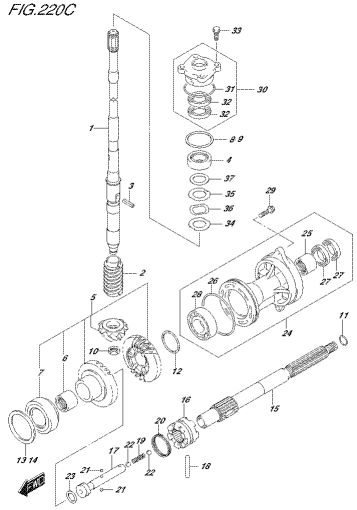

DF90A_E01_020_220C
TRANSMISSION

FIG.220D

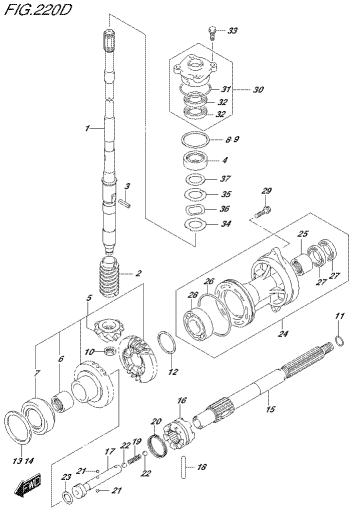

DF90A_E01_020_220D
TRANSMISSION

FIG.220E

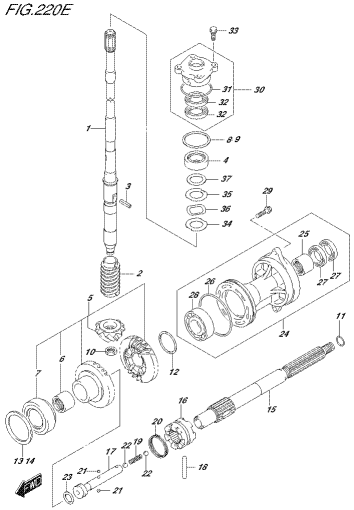

DF90A_E01_020_220E
TRANSMISSION

FIG.301A

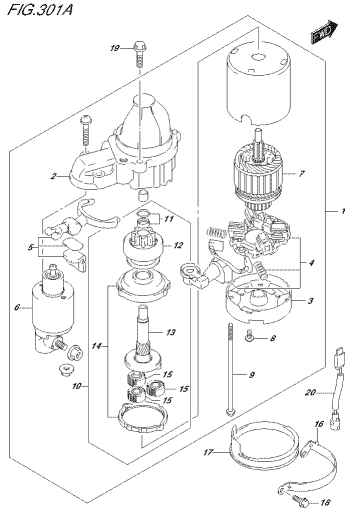

DF90A_E01_020_301A
STARTING MOTOR

FIG.303A

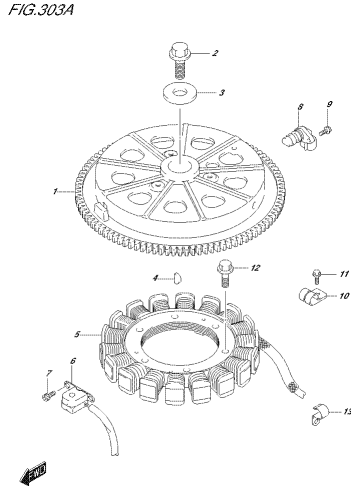

DF90A_E01_020_303A
MAGNETO

FIG.310A

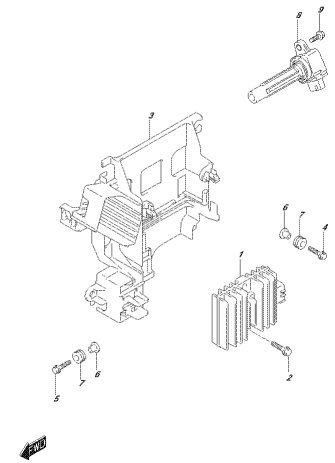

DF90A_E01_020_310A
RECTIFIER/IGNITION COIL

FIG.315A

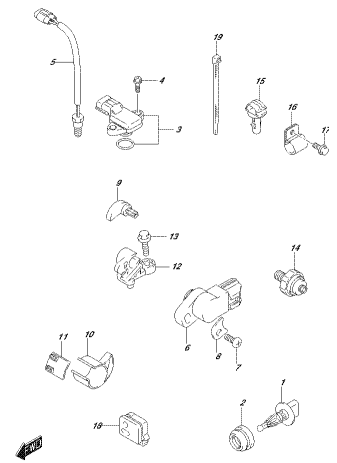

DF90A_E01_020_315A
SENSOR

FIG.315B

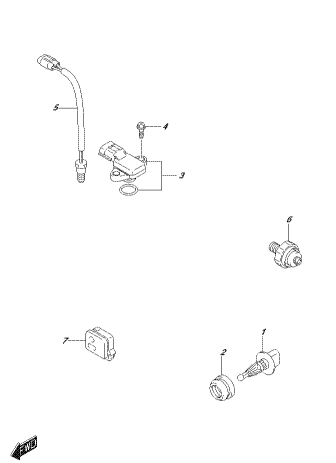

DF90A_E01_020_315B
SENSOR

FIG.315C

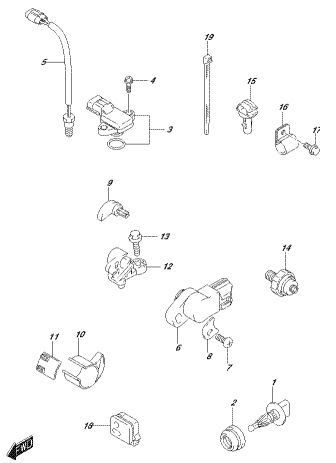

DF90A_E01_020_315C
SENSOR

FIG.322A

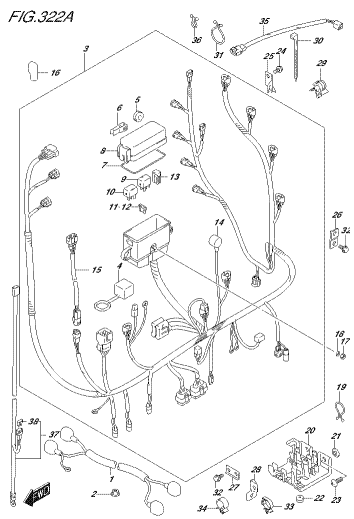

DF90A_E01_020_322A
HARNESS

FIG.322B

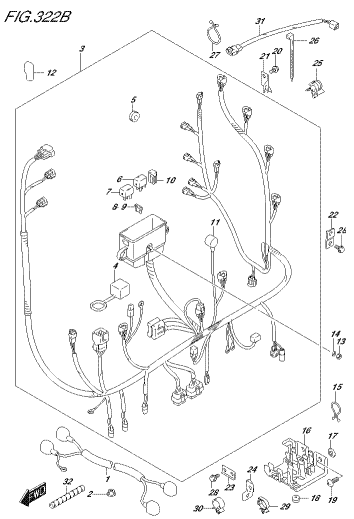

DF90A_E01_020_322B
HARNESS

FIG.322C

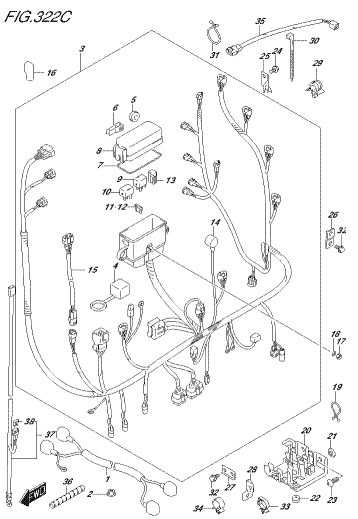

DF90A_E01_020_322C
HARNESS

FIG.326A

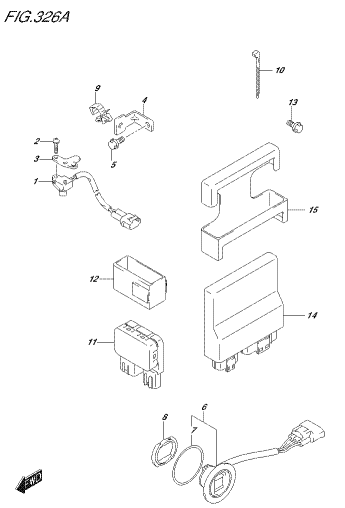

DF90A_E01_020_326A
PTT SWITCH/ENGINE CONTROL UNIT

FIG.326B

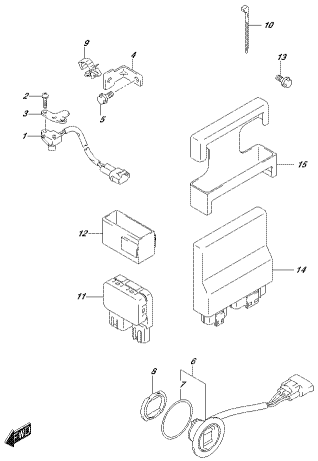

DF90A_E01_020_326B
PTT SWITCH/ENGINE CONTROL UNIT

FIG.326C

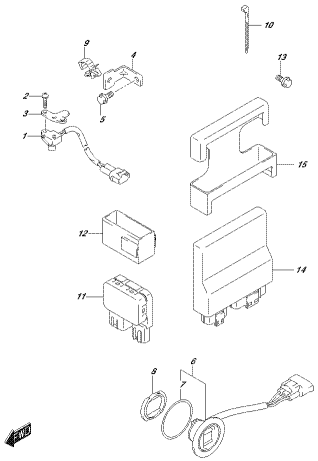

DF90A_E01_020_326C
PTT SWITCH/ENGINE CONTROL UNIT

FIG.326D

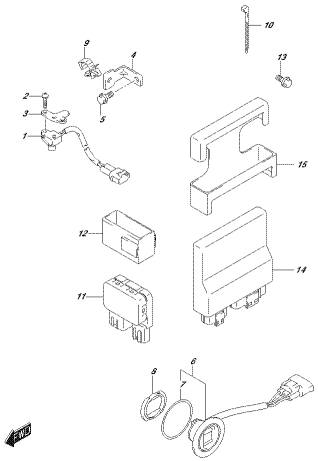

DF90A_E01_020_326D
PTT SWITCH/ENGINE CONTROL UNIT

FIG.326E

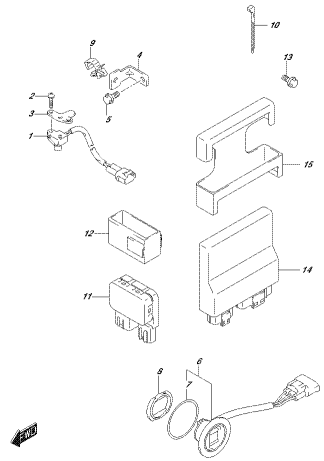

DF90A_E01_020_326E
PTT SWITCH/ENGINE CONTROL UNIT

FIG.326F

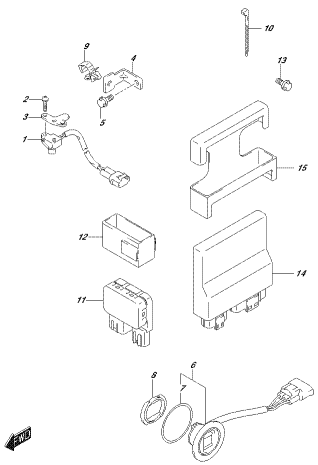

DF90A_E01_020_326F
PTT SWITCH/ENGINE CONTROL UNIT

FIG.326G

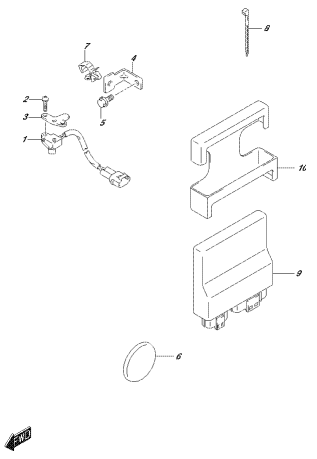

DF90A_E01_020_326G
PTT SWITCH/ENGINE CONTROL UNIT

FIG.326H

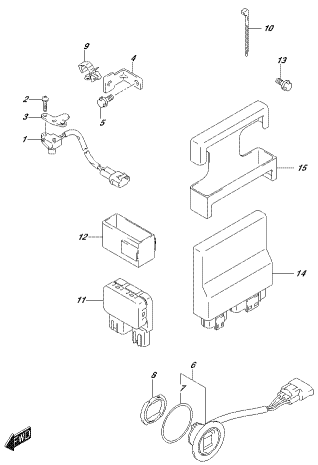

DF90A_E01_020_326H
PTT SWITCH/ENGINE CONTROL UNIT

FIG.326J

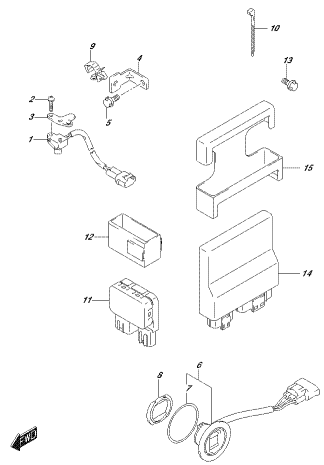

DF90A_E01_020_326J
PTT SWITCH/ENGINE CONTROL UNIT

FIG.331A

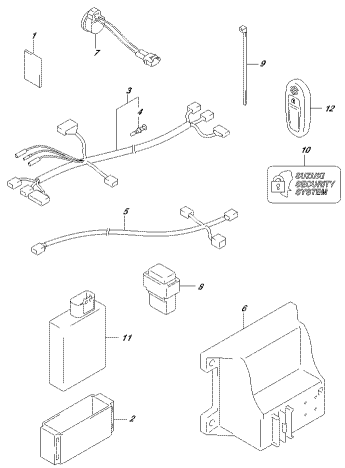

DF90A_E01_020_331A
KEY LESS START

FIG.335A

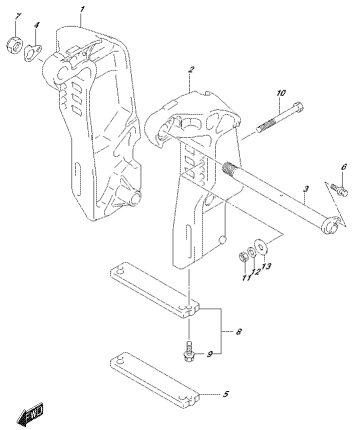

DF90A_E01_020_335A
CLAMP BRACKET

FIG.335B

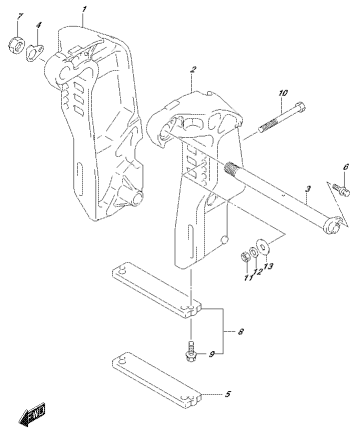

DF90A_E01_020_335B
CLAMP BRACKET

FIG.335C

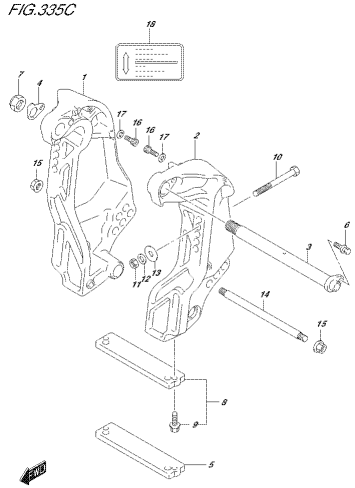

DF90A_E01_020_335C
CLAMP BRACKET

FIG.336A

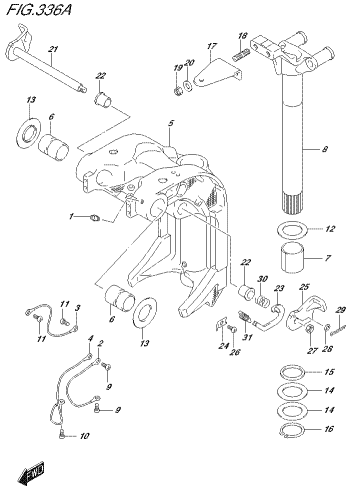

DF90A_E01_020_336A
SWIVEL BRACKET

FIG.336B

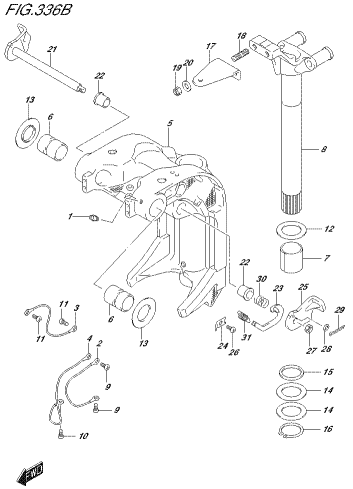

DF90A_E01_020_336B
SWIVEL BRACKET

FIG.336C

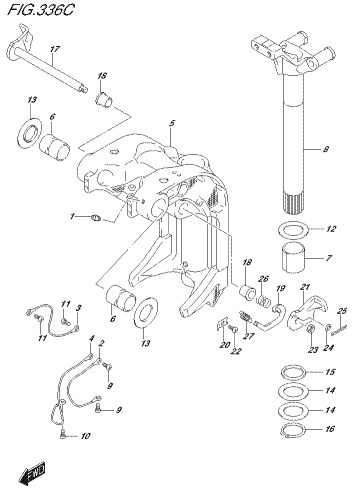

DF90A_E01_020_336C
SWIVEL BRACKET

FIG.336D

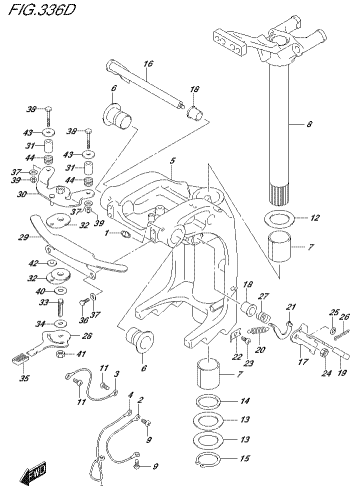

DF90A_E01_020_336D
SWIVEL BRACKET

FIG.337A

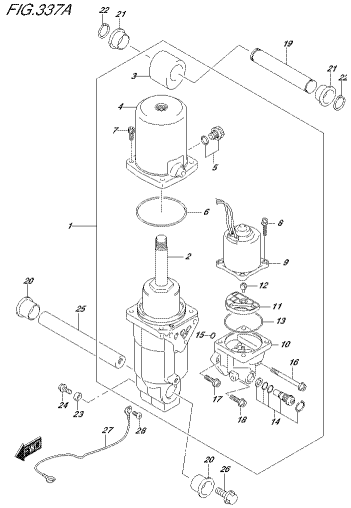

DF90A_E01_020_337A
TRIM CYLINDER

FIG.337B

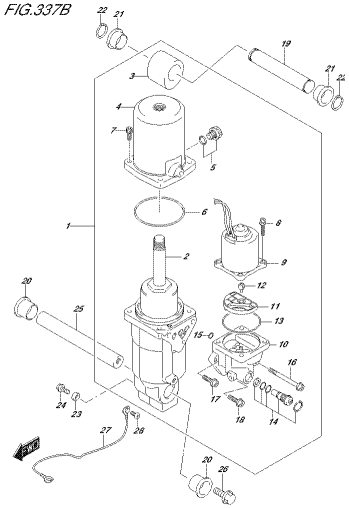

DF90A_E01_020_337B
TRIM CYLINDER

FIG.339A

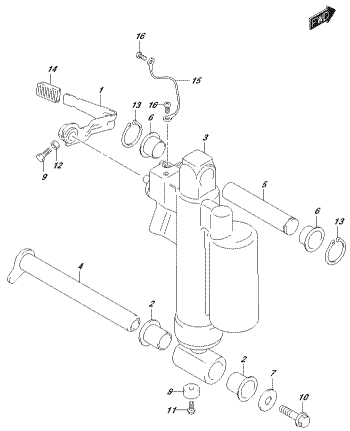

DF90A_E01_020_339A
GAS CYLINDER

FIG.340A

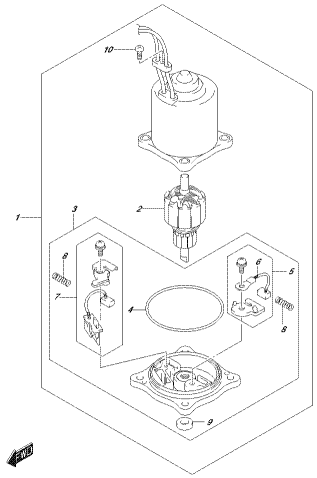

DF90A_E01_020_340A
PTT MOTOR

FIG.340B

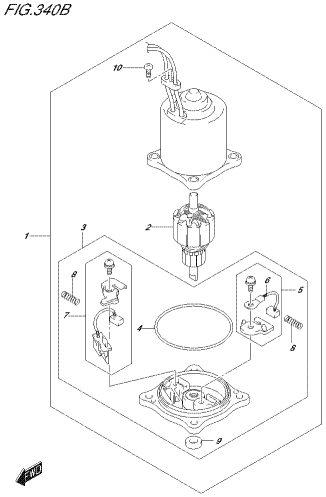

DF90A_E01_020_340B
PTT MOTOR

FIG.401A

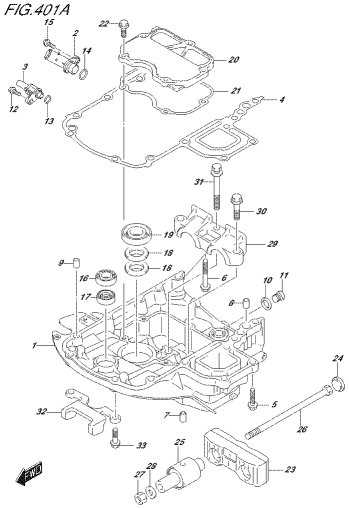

DF90A_E01_020_401A
ENGINE HOLDER

FIG.401B

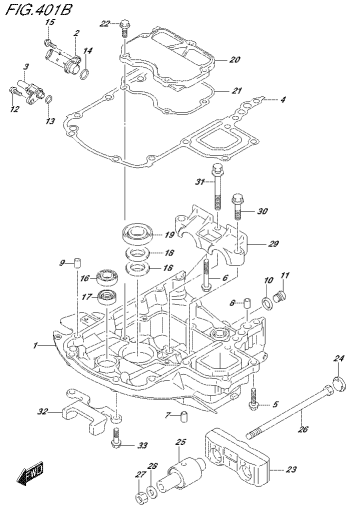

DF90A_E01_020_401B
ENGINE HOLDER

FIG.405A

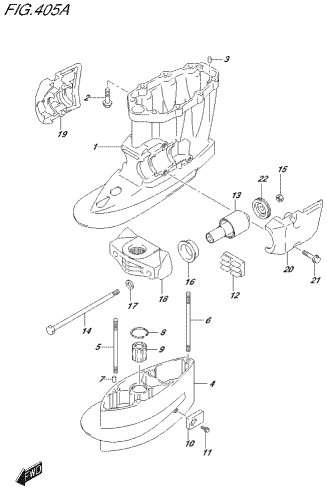

DF90A_E01_020_405A
DRIVE SHAFT HOUSING

FIG.405B

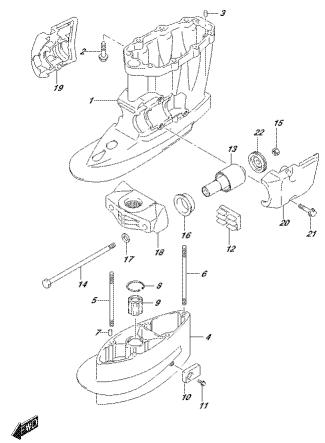

DF90A_E01, 02D, 405B
DRIVE SHAFT HOUSING

FIG.405C

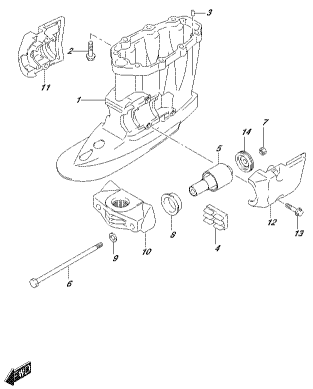

DF90A_E01, 02D, 405C
DRIVE SHAFT HOUSING

FIG.405D

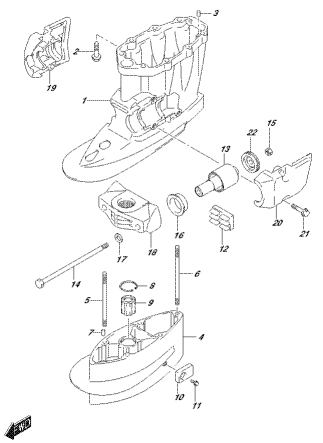

DF90A_E01, 02D, 405D
DRIVE SHAFT HOUSING

FIG.407A

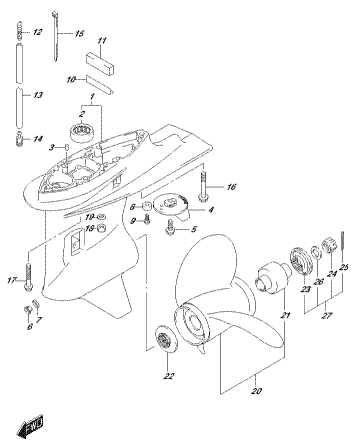

DF90A_E01, 02D, 407A
GEAR CASE

FIG.407B

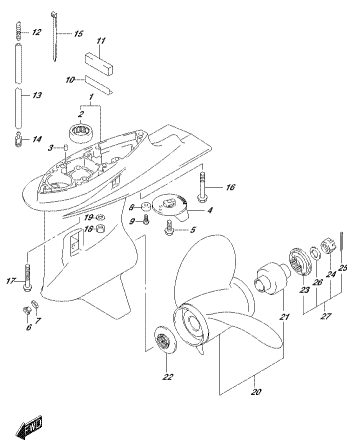

DF90A_E01, 02D, 407B
GEAR CASE

FIG.407C

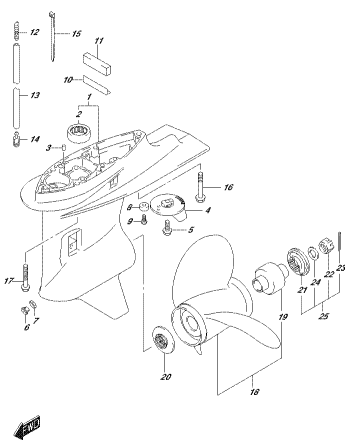

DF90A_E01, 02D, 407C
GEAR CASE

FIG.407D

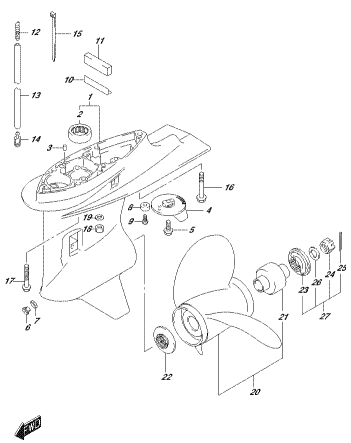

DF90A_E01, 02D, 407D
GEAR CASE

FIG.407E

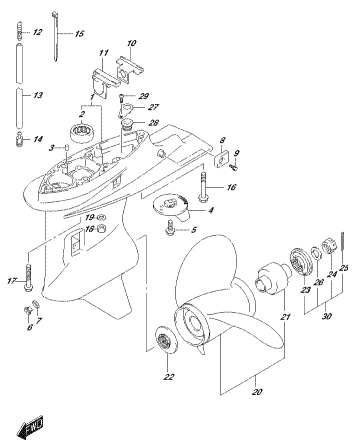

DF90A_E01, 02D, 407E
GEAR CASE

FIG.410A

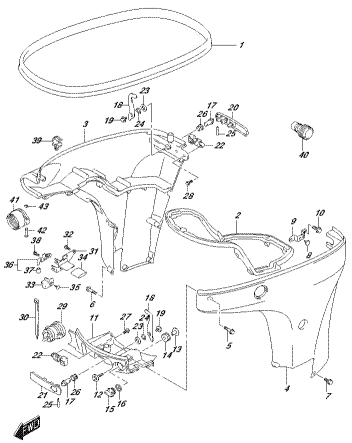

DF90A, E01, 020, 410A
SIDE COVER

FIG.410B

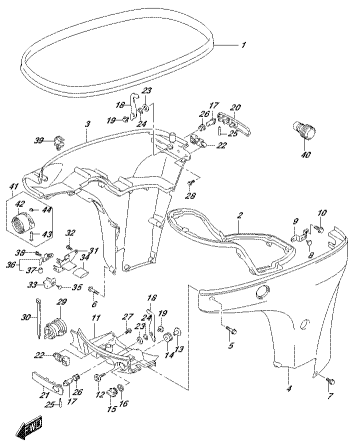

DF90A, E01, 020, 410B
SIDE COVER

FIG.410C

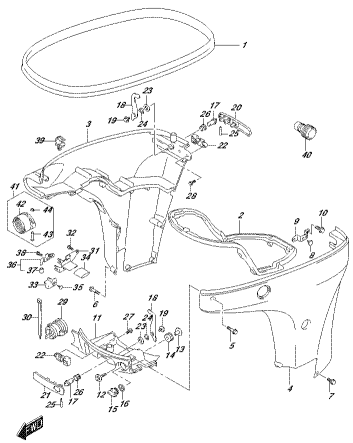

DF90A, E01, 020, 410C
SIDE COVER

FIG.410D

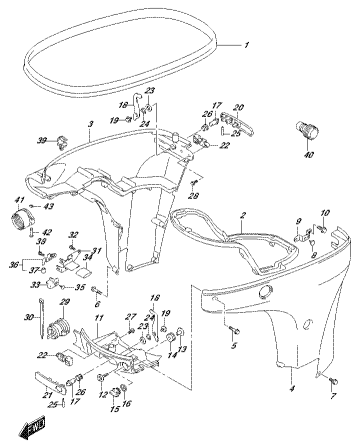

DF90A, E01, 020, 410D
SIDE COVER

FIG.420A

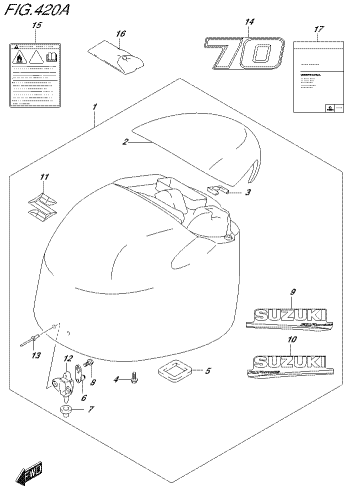

DF90A, E01, 020, 420A
ENGINE COVER

FIG.420B

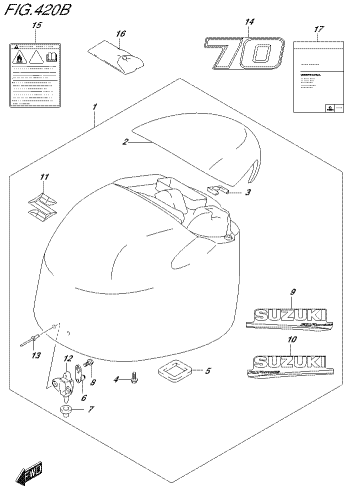

DF90A, E01, 020, 420B
ENGINE COVER

FIG.420C

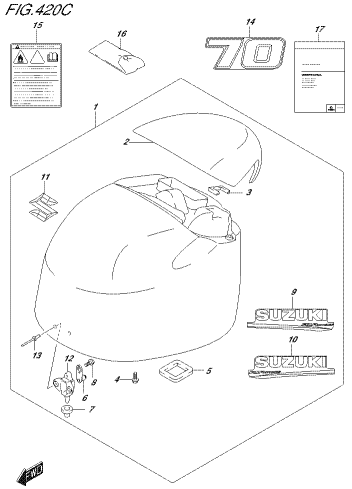

DF90A, E01, 020, 420C
ENGINE COVER

FIG.420D

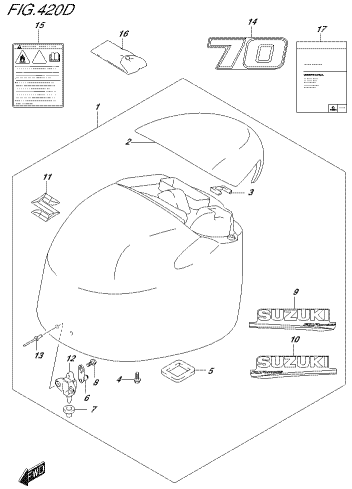

DF90A, E01, 020, 420D
ENGINE COVER

FIG.420E

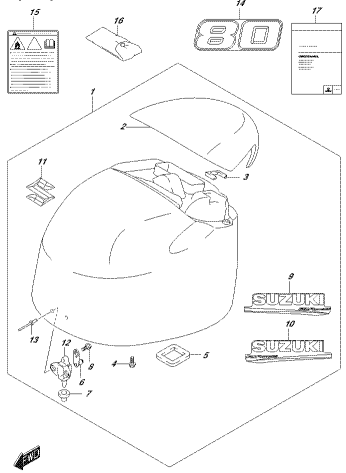

DF80A, E01, 02D, 420E
ENGINE COVER

FIG.420F

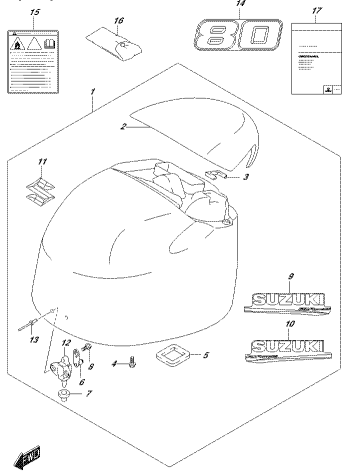

DF80A, E01, 02D, 420F
ENGINE COVER

FIG.420G

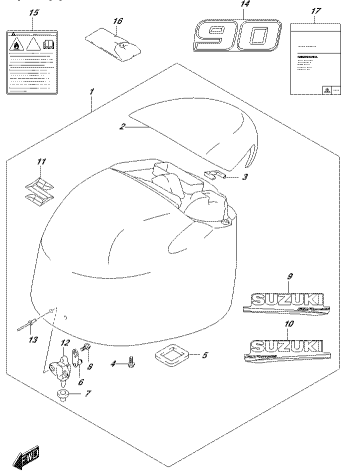

DF90A, E01, 02D, 420G
ENGINE COVER

FIG.420H

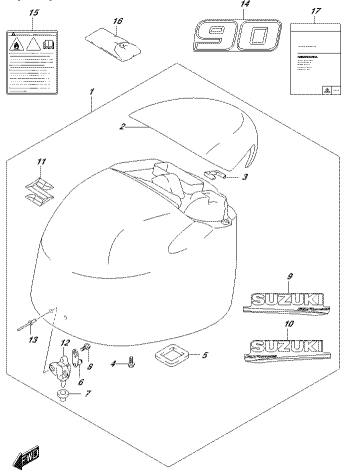

DF90A, E01, 02D, 420H
ENGINE COVER

FIG.420J

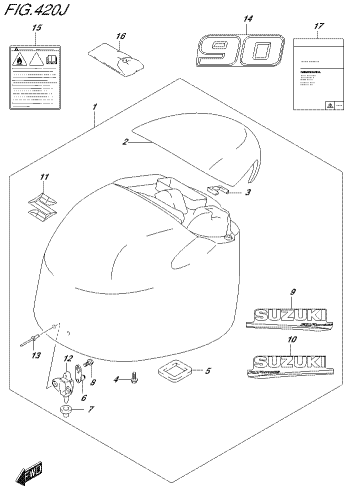

DF90A, E01, 02D, 420J
ENGINE COVER

FIG.420K

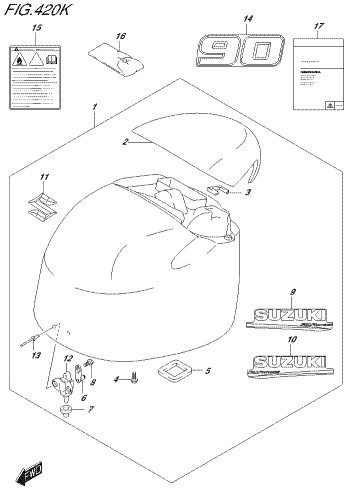

DF90A, E01, 02D, 420K
ENGINE COVER

FIG.420L

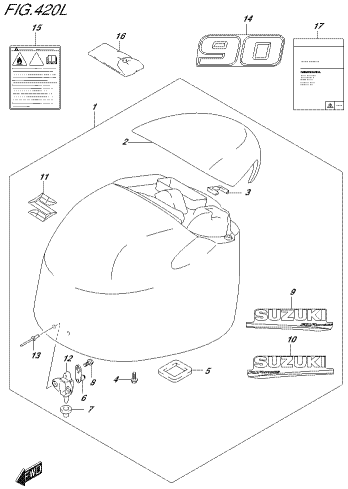

DF90A, E01, 02D, 420L
ENGINE COVER

FIG.420M

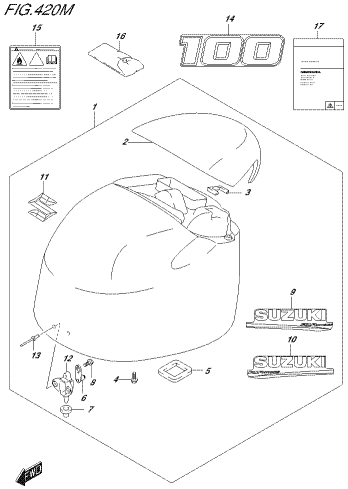

DF90A, E01, 02D, 420M
ENGINE COVER

FIG.420N

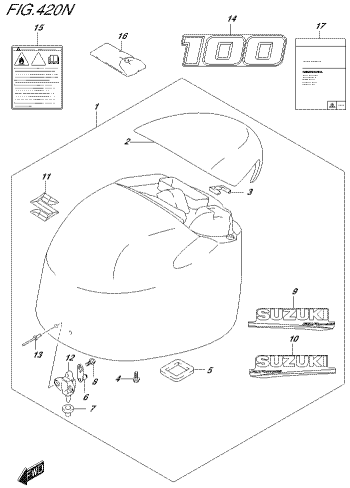

DF90A_E01_020_420N
ENGINE COVER

FIG.432A

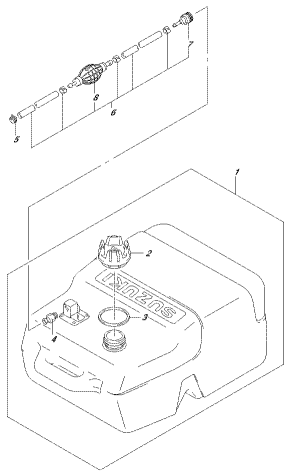

DF90A_E01_020_432A
FUEL TANK

FIG.442A

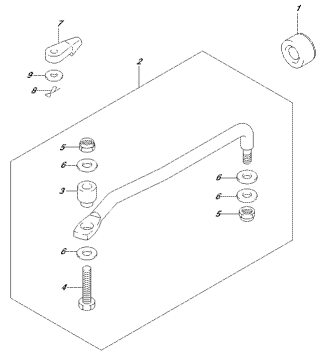

DF90A_E01_020_442A
DRAG LINK

FIG.442B

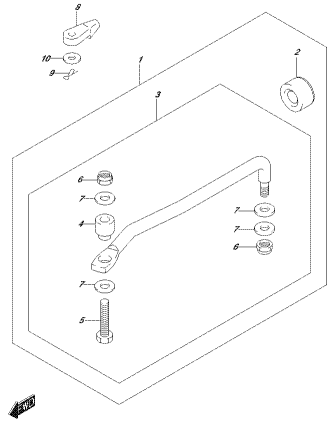

DF90A_E01_020_442B
DRAG LINK

FIG.444A

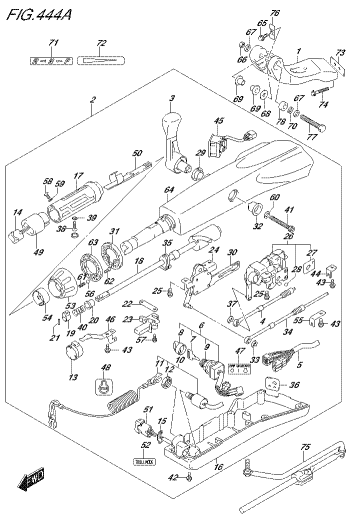

DF90A_E01_020_444A
TILLER HANDLE

FIG.444B

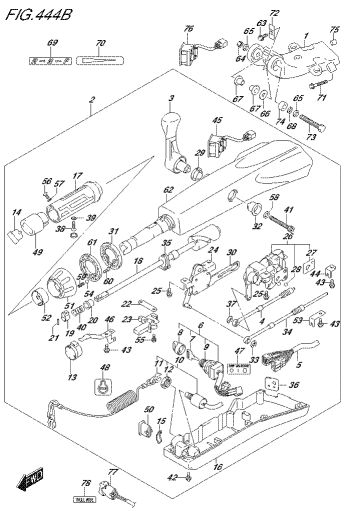

DF90A_E01_020_444B
TILLER HANDLE

FIG.460A

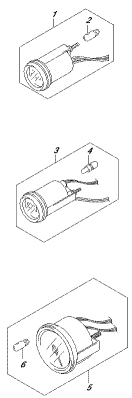

DF90A_E01_020_460A
METER

FIG.501A

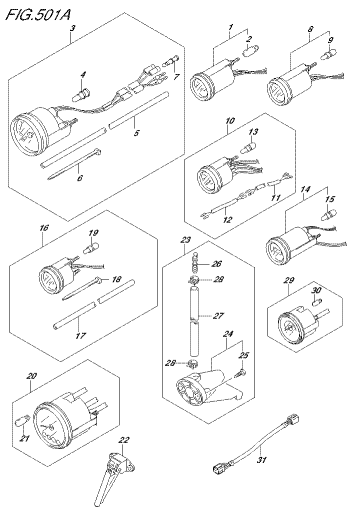

DF90A_E01_020_501A
LIFT METER

FIG.501B

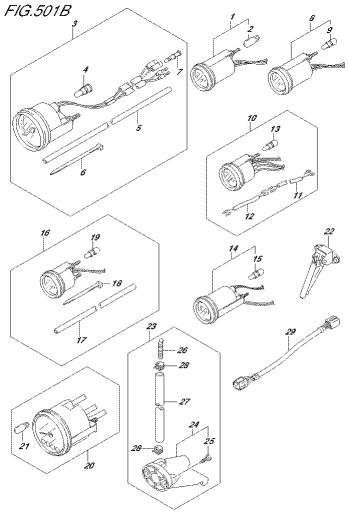

DF90A_E01_020_501B
OPT:METER

FIG.507A

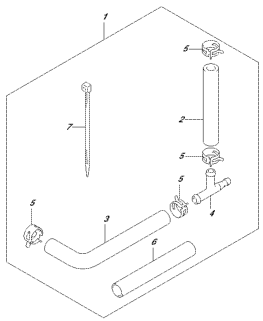

DF90A_E01_020_507A
OPT:WATER PRESSURE GAUGE SUB KIT

FIG.508A

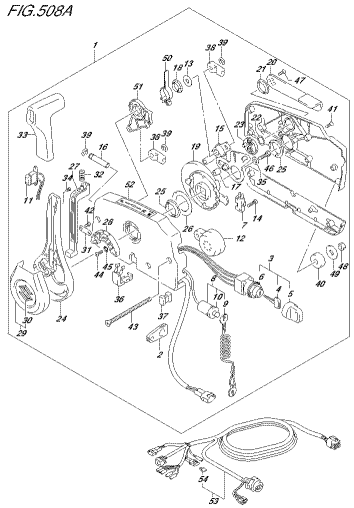

DF90A_E01_020_508A
OPT:REMOTE CONTROL

FIG.508B

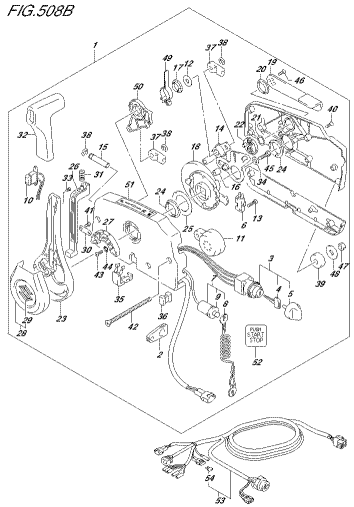

DF90A_E01_020_508B
OPT:REMOTE CONTROL

FIG.517A

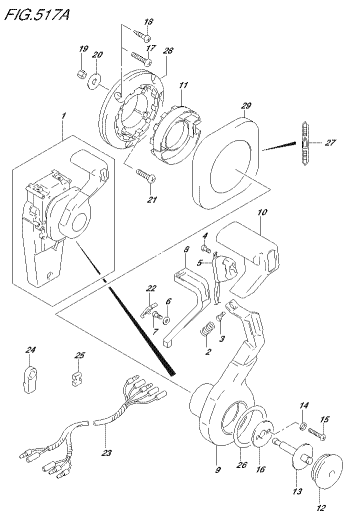

DF90A_E01_020_517A
OPT:CONCEALED REMOCON (1)

FIG.518A

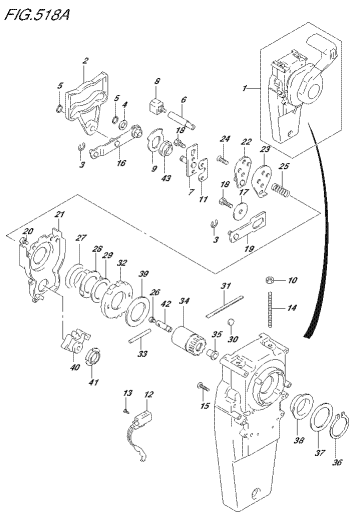

DF90A_E01_020_518A
OPT:CONCEALED REMOCON (2)

FIG.519A

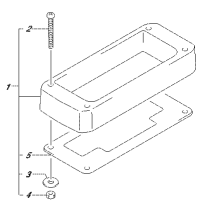

DF90A_E01_020_519A
OPT:REMOTE CONTROL SPACER

FIG.519B

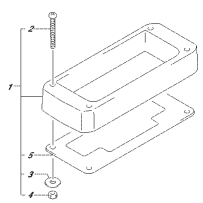

DF90A_E01_020_519B
OPT:REMOTE CONTROL SPACER

FIG.521A

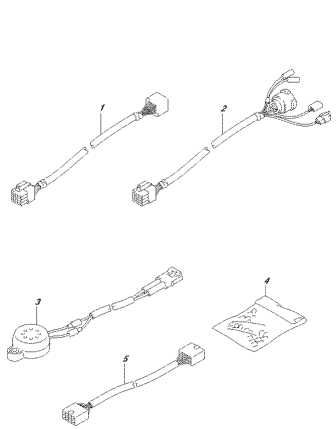

DF90A_E01_020_521A
OPT:HARNESS

FIG.521B

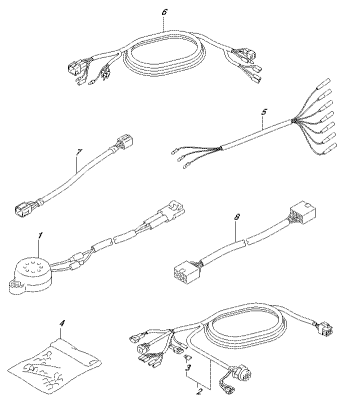

DF90A_E01_020_521B
OPT:HARNESS

FIG.530A

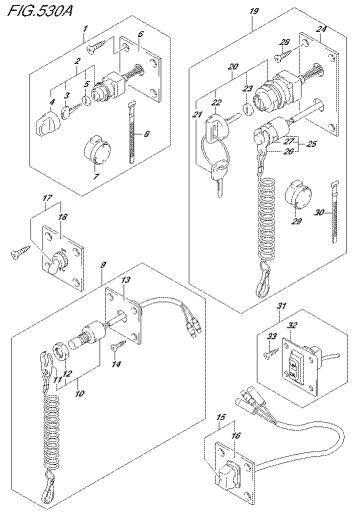

DF90A_E01_020_530A
OPT:SWITCH

FIG.535A

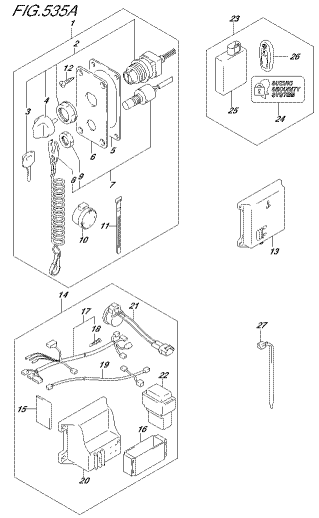

DF90A_E01_020_535A
OPT:KEY LESS START

FIG.544A

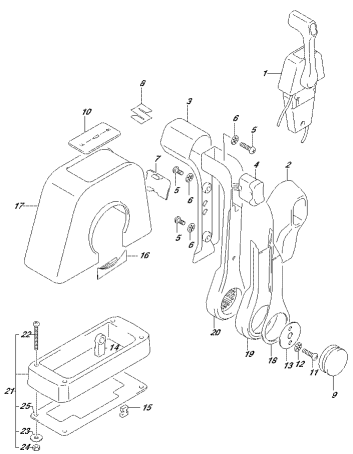

DF90A_E01_020_544A
OPT:REMOTE CONTROL ASSY SINGLE (1)

FIG.545A

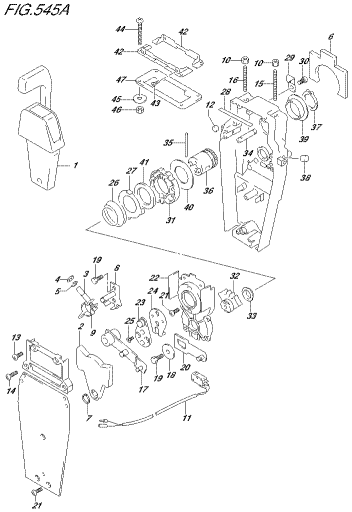

DF90A_E01_020_545A
OPT:REMOTE CONTROL ASSY SINGLE (2)

FIG.570A

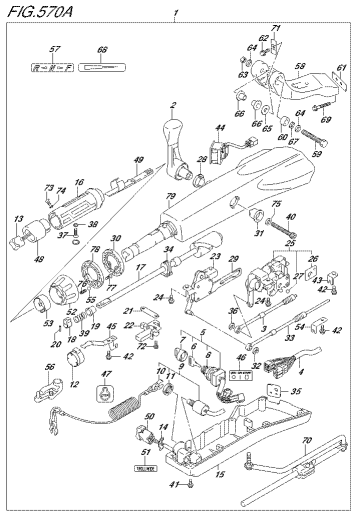

DF90A_E01_020_570A
OPT:TILLER HANDLE

FIG.585A

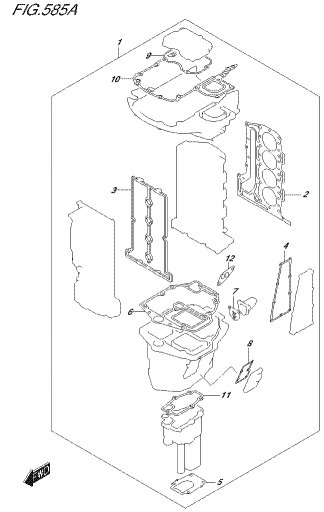

DF90A_E01_020_585A
OPT:GASKET SET

FIG.585B

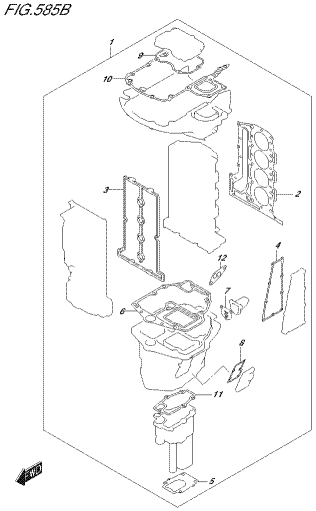

DF90A_E01_020_585B
OPT:GASKET SET

FIG.600A

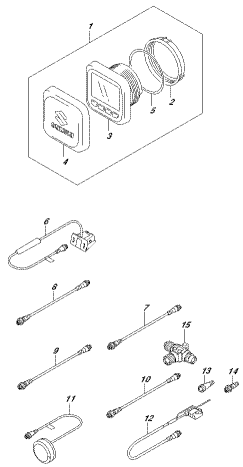

DF90A_E01_020_600A
OPT:MULTI FUNCTION GAUGE

FIG.601A

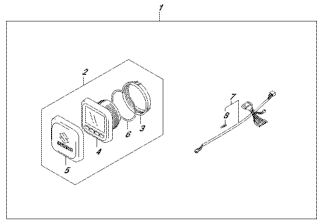

DF90A_E01_020_601A
OPT:MULTI FUNCTION GAUGE (1)

FIG.601B

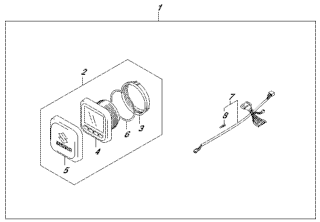

DF90A_E01_020_601B
OPT:MULTI FUNCTION GAUGE (1)

FIG.602A

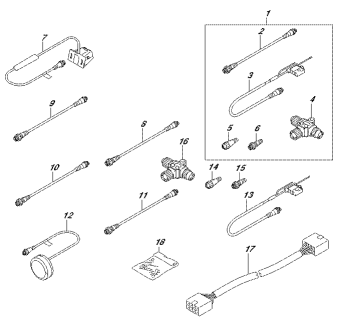

DF90A_E01_020_602A
OPT:MULTI FUNCTION GAUGE (2)

FIG.602B

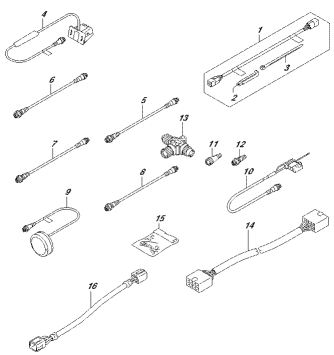

DF90A_E01_020_602B
OPT:MULTI FUNCTION GAUGE (2)

FIG.111A

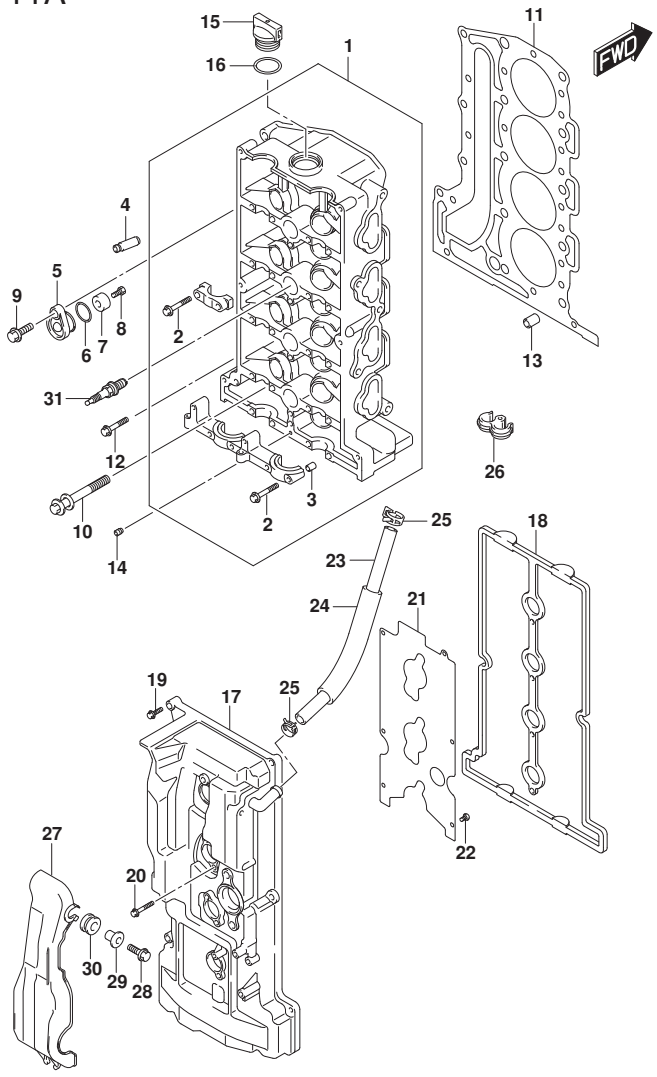

FIG.111A (1-B-2) CYLINDER HEAD (DF70A)(DF70ATH)(DF80A)(DF90A)(DF90ATH)

REF NO.	PART NO.	DESCRIPTION	Q'TY	REMARKS
1	11100-87L10	HEAD ASSY, CYLINDER	1	
2	09103-06266	.BOLT (6X40)	22	
3	09206-08001	.PIN (8X11)	18	
4	11115-73G01-001	GUIDE, VALVE (OS:0.5)	16	OPT
5	11261-93J00	COVER, PROTECTION ANODE	2	
6	09280-22019	O RING (D:1.9,ID:21.8)	2	
7	55321-87J01	ANODE, PROTECTION	2	
8	09103-06281	BOLT (6X14)	2	
9	01550-0820C	BOLT	2	
10	11117-89J00	BOLT, CYLINDER HEAD	10	
11	11141-87L00	GASKET, CYLINDER HEAD	1	
12	01550-08407	BOLT	5	
13	04211-13189	PIN	2	
14	11112-96L00	PLUG, OIL VENTURI	1	
15	11382-93J00	CAP, OIL FILLER	1	
16	09280-26006	O RING (D:3.1,ID:26.4)	1	
17	11170-87L11	COVER, CYLINDER HEAD	1	
18	11189-87L00	GASKET, CYLINDER HEAD COVER	1	
19	01550-0625C	BOLT	8	
20	01550-0645C	BOLT	4	
21	11173-87L00	PLATE, BREATHER	1	

FIG.111A

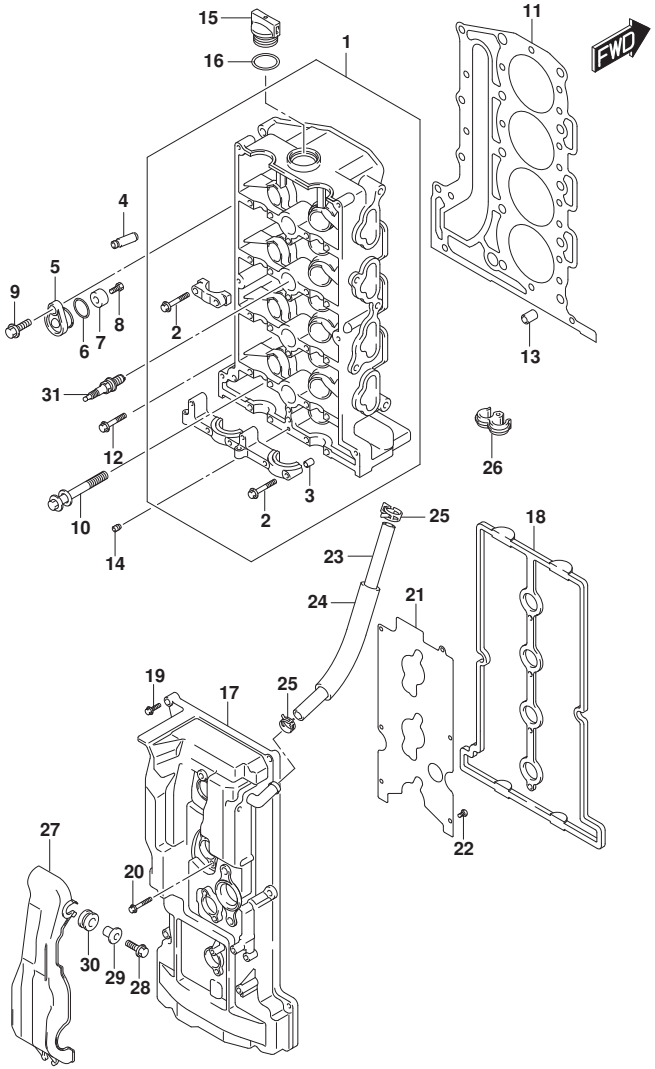

FIG.111A (1-B-3) CYLINDER HEAD (DF70A)(DF70ATH)(DF80A)(DF90A)(DF90ATH)

REF NO.	PART NO.	DESCRIPTION	Q'TY	REMARKS
22	02112-0612A	SCREW	6	
23	09355-11165-600	HOSE (11X16X600)	1	L:600->260
24	18498-95J01	PROTECTOR, BREATHER HOSE	1	
25	09401-15414	CLIP	2	
26	09408-00155	CLAMP	1	
27	11194-87L10	GUARD, FUEL HOSE	1	
28	01550-0620C	BOLT	2	
29	09169-06062	WASHER	2	
30	09320-09016	CUSHION	2	
31	09482-00446	SPARK PLUG (DCPR6E)	4	NGK

DF70A E01
DF70A E40
DF70ATH E01
DF70ATH E40
DF80A E01
DF80A E40
DF90A E01
DF90A E40
DF90ATH E01
DF90ATH E40

FIG.111B

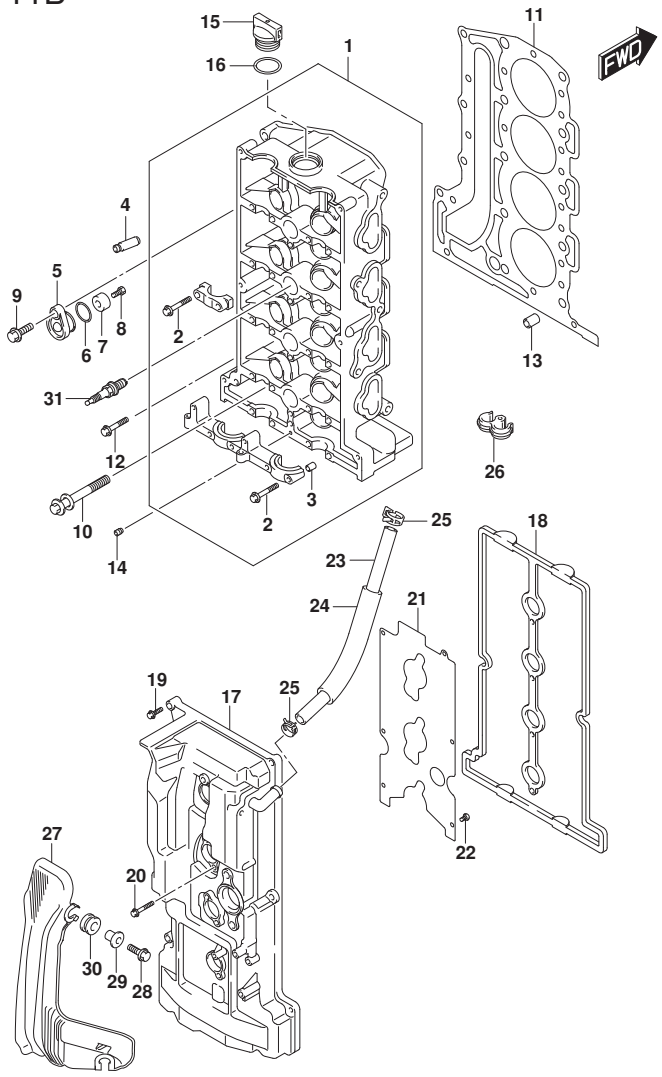

FIG.111B (1-B-4) CYLINDER HEAD (DF90AWQH)(DF100B)

REF NO.	PART NO.	DESCRIPTION	Q'TY	REMARKS
1	11100-87L10	HEAD ASSY, CYLINDER	1	
2	09103-06266	.BOLT (6X40)	22	
3	09206-08001	.PIN (8X11)	18	
4	11115-73G01-001	GUIDE, VALVE (OS:0.5)	16	OPT
5	11261-93J00	COVER, PROTECTION ANODE	2	
6	09280-22019	O RING (D:1.9,ID:21.8)	2	
7	55321-87J01	ANODE, PROTECTION	2	
8	09103-06281	BOLT (6X14)	2	
9	01550-0820C	BOLT	2	
10	11117-89J00	BOLT, CYLINDER HEAD	10	
11	11141-87L00	GASKET, CYLINDER HEAD	1	
12	01550-08407	BOLT	5	
13	04211-13189	PIN	2	
14	11112-96L00	PLUG, OIL VENTURI	1	
15	11382-93J00	CAP, OIL FILLER	1	
16	09280-26006	O RING (D:3.1,ID:26.4)	1	
17	11170-87L11	COVER, CYLINDER HEAD	1	
18	11189-87L00	GASKET, CYLINDER HEAD COVER	1	
19	01550-0625C	BOLT	8	
20	01550-0645C	BOLT	4	
21	11173-87L00	PLATE, BREATHER	1	
22	02112-0612A	SCREW	6	
23	09355-11165-600	HOSE (11X16X600)	1	L:600->260
24	18498-95J01	PROTECTOR, BREATHER HOSE	1	
25	09401-15414	CLIP	2	
26	09408-00155	CLAMP	1	

FIG.111B

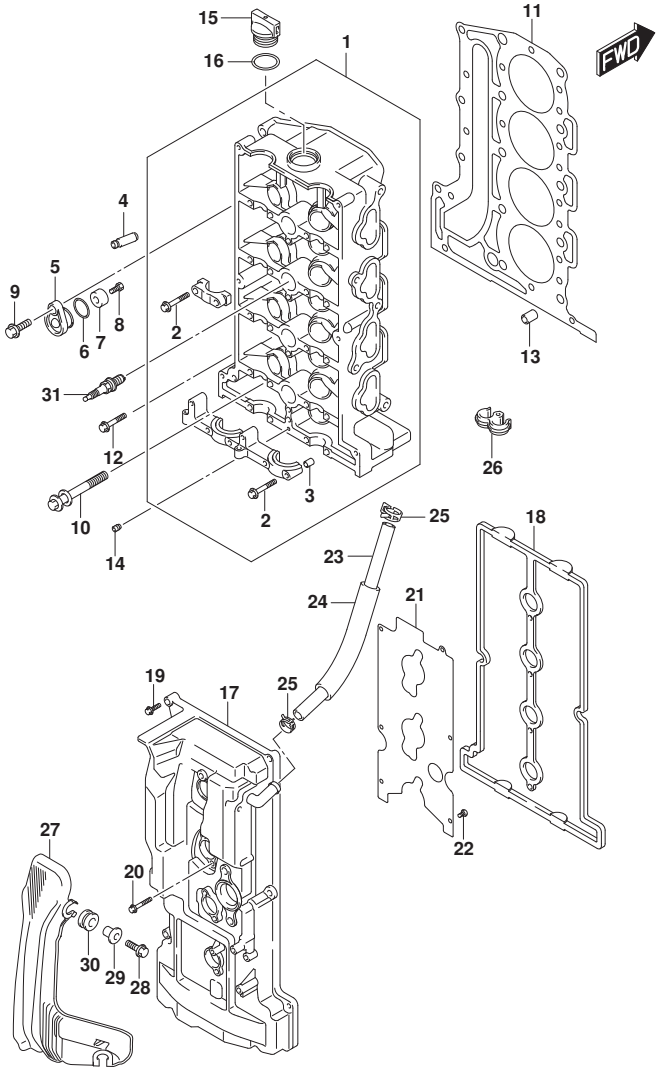

FIG.111B (1-B-5) CYLINDER HEAD (DF90AWQH)(DF100B)

REF NO.	PART NO.	DESCRIPTION	Q'TY	REMARKS
27	11194-87L20	GUARD, FUEL HOSE	1	
28	01550-0620C	BOLT	3	
29	09169-06062	WASHER	3	
30	09320-09016	CUSHION	3	
31	09482-00446	SPARK PLUG (DCPR6E)	4	NGK

DF90AWQH E40
DF100B E01
DF100B E40

FIG.113A

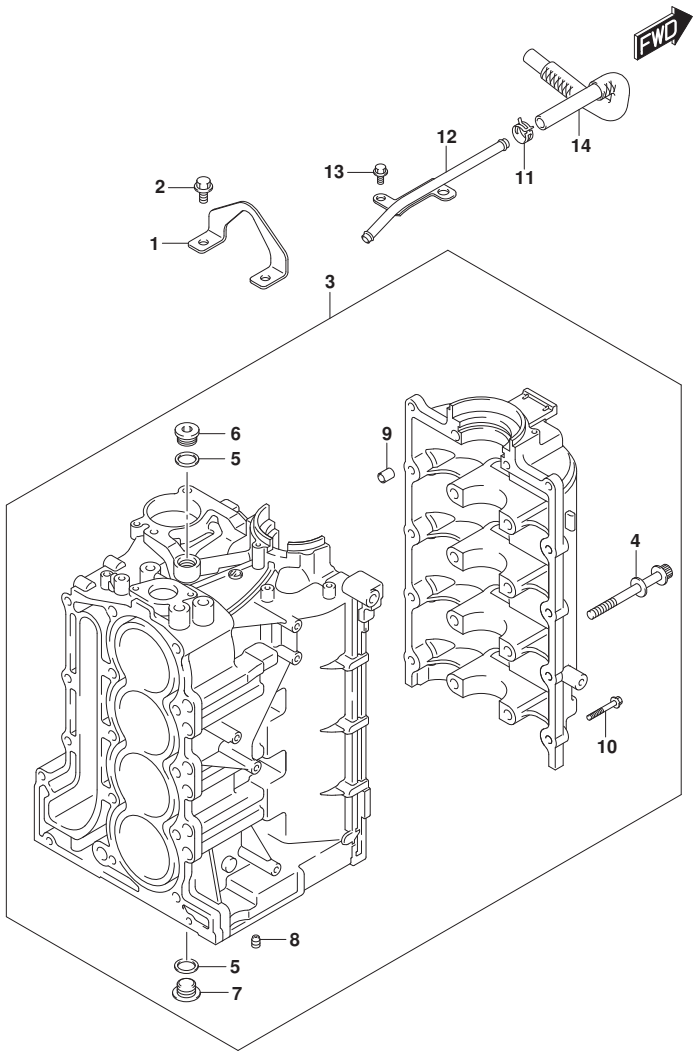

FIG.113A (1-B-6) CYLINDER BLOCK

REF NO.	PART NO.	DESCRIPTION	Q'TY	REMARKS
1	11291-87L00	HOOK, ENGINE	1	
2	01550-0820C	BOLT	2	
3	11300-87L11	BLOCK ASSY, CYLINDER	1	
4	11117-90J10	.BOLT, CRANKCASE	10	
5	11216-90J10	.GASKET, OIL GALLERY PLUG	3	
6	09248-18011	.PLUG (18X8)	1	
7	09248-18014	.PLUG (18X8)	2	
8	11118-98J01	.PLUG, WATER	1	
9	09206-13019	.PIN (10.4X13X16)	5	
10	01550-08407	.BOLT	10	
11	09401-15414	CLIP	1	
12	11223-87L00	PIPE, BREATHER	1	
13	01550-0612C	BOLT	2	
14	11224-87L00	HOSE, BREATHER NO.2	1	

DF90A_E01_020_113A
CYLINDER BLOCK

FIG.116A

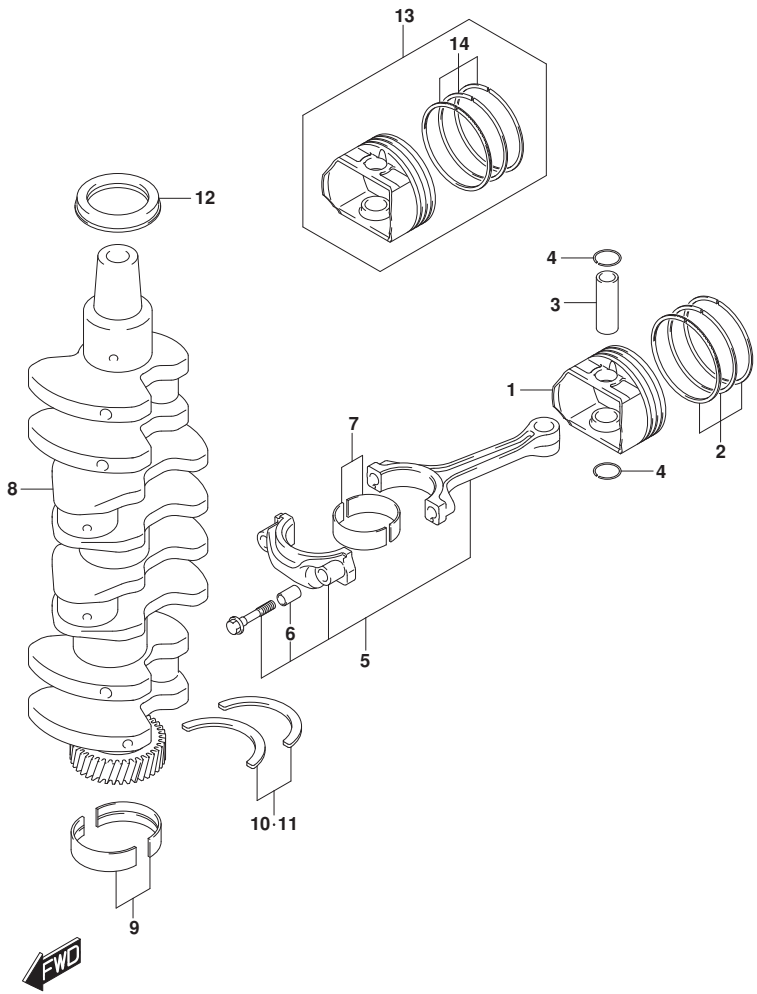

FIG.116A (1-B-7) CRANKSHAFT

REF NO.	PART NO.	DESCRIPTION	Q'TY	REMARKS
1	12111-87L01	PISTON	4	
2	12140-87L01	RING SET, PISTON	4	
3	12151-54A50	PIN, PISTON	4	
4	09381-18002	CIRCLIP	8	
5	12160-87L10	CONNROD ASSY	4	
6	04221-04089	.PIN	8	
7-1	12100-69830-0A0	BEARING SET, CONNROD	4	GREEN
7-2	12100-69830-0B0	BEARING SET, CONNROD	4	BLACK
7-3	12100-69830-0C0	BEARING SET, CONNROD	4	NON
7-4	12100-69830-0D0	BEARING SET, CONNROD	4	YELLOW
7-5	12100-69830-0E0	BEARING SET, CONNROD	4	BLUE
7-6	12100-69830-025	BEARING SET, CONNROD (US:0.25)	4	OPT
8	12220-87L00	CRANKSHAFT	1	
9-1	12340-57K02-0C0	BEARING SET, CRANKSHAFT	5	GREEN
9-2	12340-57K02-0D0	BEARING SET, CRANKSHAFT	5	BLACK
9-3	12340-57K02-0E0	BEARING SET, CRANKSHAFT	5	NON
9-4	12340-57K02-0A0	BEARING SET, CRANKSHAFT	5	PURPLE
9-5	12340-57K02-0B0	BEARING SET, CRANKSHAFT	5	BROWN
9-6	12300-57820-0AA	BEARING SET, CRANKSHAFT (RED/PURPLE) (US:0.25)	5	OPT
9-7	12300-57820-0BA	BEARING SET, CRANKSHAFT (RED/BROWN) (US:0.25)	5	OPT
9-8	12300-57820-0CA	BEARING SET, CRANKSHAFT (RED/GREEN) (US:0.25)	5	OPT
9-9	12300-57820-0DA	BEARING SET, CRANKSHAFT (RED/BLACK) (US:0.25)	5	OPT
9-10	12300-57820-0EA	BEARING SET, CRANKSHAFT (RED) (US:0.25)	5	OPT
10	12300-78890	BEARING SET, CRANK THRUST	1	
11	12300-78890-012	BEARING SET, CRANK THRUST (OS:0.125)	1	OPT

FIG.116A

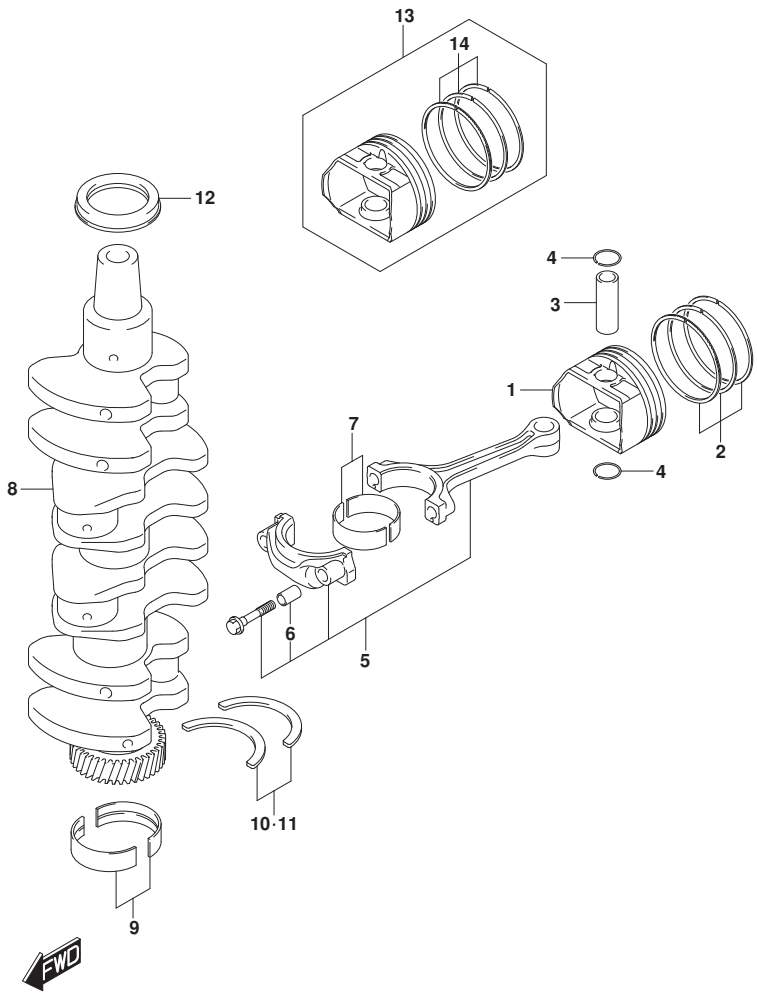

FIG.116A (1-B-8) CRANKSHAFT

REF NO.	PART NO.	DESCRIPTION	Q'TY	REMARKS
12	09283-52006	OIL SEAL (52X70X10)	1	
13	12100-87L02-050	PISTON SET (OS:0.50)	4	OPT
14	12140-87L01-050	.RING SET, PISTON (OS:0.50)	4	OPT

DF90A_E01_020_116A
CRANKSHAFT

FIG.119A

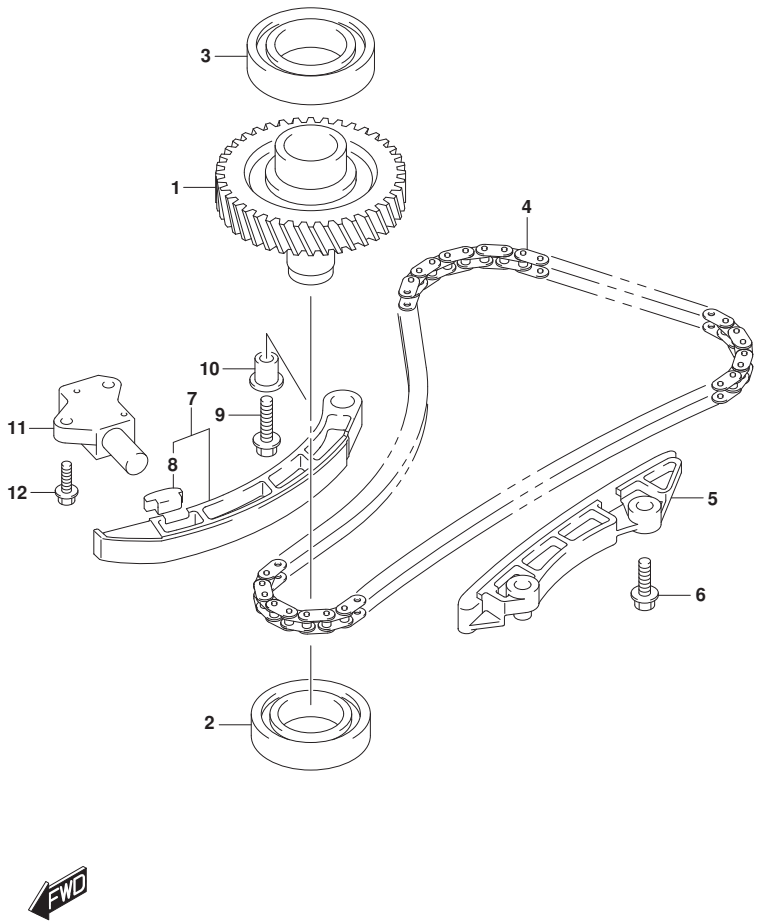

FIG.119A (1-B-9) TIMING CHAIN

REF NO.	PART NO.	DESCRIPTION	Q'TY	REMARKS
1	12730-87L00	GEAR, DRIVEN (NT:36)	1	
2	09262-32023	BEARING (32X58X13)	1	
3	09262-35070	BEARING (35X62X14)	1	
4	12761-87L00	CHAIN, TIMING	1	
5	12771-87L00	GUIDE, TIMING CHAIN	1	
6	01550-0825A	BOLT	2	
7	12810-87L00	TENSIONER ASSY, TIMING CHAIN	1	
8	12813-73G00	.PAD, TIMING CHAIN TENSIONER	1	
9	01550-0835A	BOLT	1	
10	12812-90J00	SPACER, TIMING CHAIN TENSIONER	1	
11	12831-93J01	ADJUSTER ASSY, TENSIONER	1	
12	01550-0620A	BOLT	2	

DF90A_E01_020_119A
TIMING CHAIN

FIG.121A

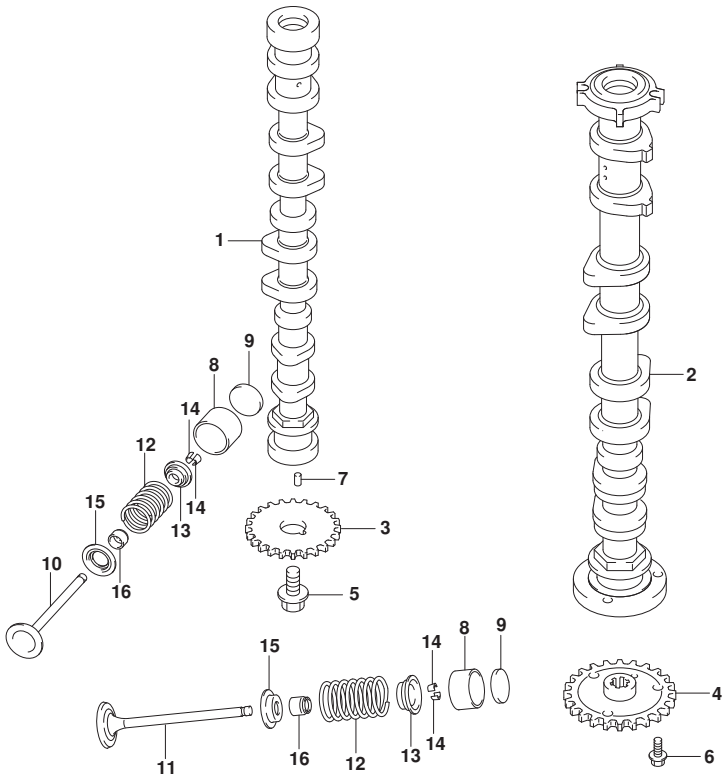

FIG.121A (1-B-10) CAMSHAFT (DF70A)(DF70ATH)

REF NO.	PART NO.	DESCRIPTION	Q'TY	REMARKS
1	12701-87L20	CAMSHAFT, INTAKE	1	
2	12705-87L00	CAMSHAFT, EXHAUST	1	
3	12741-90J01	SPROCKET, CAMSHAFT TIMING (NT:29)	1	
4	12748-87L00	SPROCKET, EXH CAMSHAFT (NT:29)	1	
5	12749-93J00	BOLT, CAMSHAFT	1	
6	01550-0612A	BOLT	3	
7	04221-05109	PIN	2	
8	12891-69J00	TAPPET	16	
9-1	12892-69J00-208	SHIM, TAPPET (T:2.08)	16	
9-2	12892-69J00-210	SHIM, TAPPET (T:2.10)	16	
9-3	12892-69J00-212	SHIM, TAPPET (T:2.12)	16	
9-4	12892-69J00-214	SHIM, TAPPET (T:2.14)	16	
9-5	12892-69J00-216	SHIM, TAPPET (T:2.16)	16	
9-6	12892-69J00-218	SHIM, TAPPET (T:2.18)	16	
9-7	12892-69J00-220	SHIM, TAPPET (T:2.20)	16	
9-8	12892-69J00-222	SHIM, TAPPET (T:2.22)	16	
9-9	12892-69J00-224	SHIM, TAPPET (T:2.24)	16	
9-10	12892-69J00-226	SHIM, TAPPET (T:2.26)	16	
9-11	12892-69J00-228	SHIM, TAPPET (T:2.28)	16	
9-12	12892-69J00-230	SHIM, TAPPET (T:2.30)	16	
9-13	12892-69J00-232	SHIM, TAPPET (T:2.32)	16	
9-14	12892-69J00-234	SHIM, TAPPET (T:2.34)	16	
9-15	12892-69J00-236	SHIM, TAPPET (T:2.36)	16	
9-16	12892-69J00-238	SHIM, TAPPET (T:2.38)	16	
9-17	12892-69J00-240	SHIM, TAPPET (T:2.40)	16	
9-18	12892-69J00-242	SHIM, TAPPET (T:2.42)	16	
9-19	12892-69J00-244	SHIM, TAPPET (T:2.44)	16	
9-20	12892-69J00-246	SHIM, TAPPET (T:2.46)	16	
9-21	12892-69J00-248	SHIM, TAPPET (T:2.48)	16	
9-22	12892-69J00-250	SHIM, TAPPET (T:2.50)	16	
9-23	12892-69J00-252	SHIM, TAPPET (T:2.52)	16	
9-24	12892-69J00-254	SHIM, TAPPET (T:2.54)	16	

FIG.121A

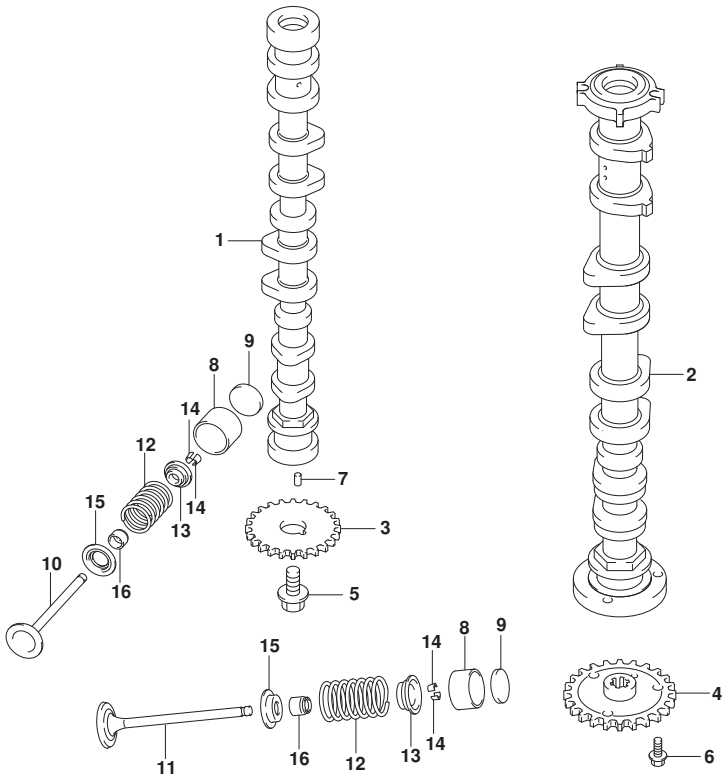

FIG.121A (1-B-11) CAMSHAFT (DF70A)(DF70ATH)

REF NO.	PART NO.	DESCRIPTION	Q'TY	REMARKS
9-25	12892-69J00-256	SHIM, TAPPET (T:2.56)	16	
9-26	12892-69J00-258	SHIM, TAPPET (T:2.58)	16	
9-27	12892-69J00-260	SHIM, TAPPET (T:2.60)	16	
9-28	12892-69J00-262	SHIM, TAPPET (T:2.62)	16	
9-29	12892-69J00-264	SHIM, TAPPET (T:2.64)	16	
9-30	12892-69J00-266	SHIM, TAPPET (T:2.66)	16	
9-31	12892-69J00-268	SHIM, TAPPET (T:2.68)	16	
9-32	12892-69J00-270	SHIM, TAPPET (T:2.70)	16	
9-33	12892-69J00-272	SHIM, TAPPET (T:2.72)	16	
9-34	12892-69J00-274	SHIM, TAPPET (T:2.74)	16	
9-35	12892-69J00-276	SHIM, TAPPET (T:2.76)	16	
9-36	12892-69J00-278	SHIM, TAPPET (T:2.78)	16	
9-37	12892-69J00-280	SHIM, TAPPET (T:2.80)	16	
9-38	12892-69J00-282	SHIM, TAPPET (T:2.82)	16	
9-39	12892-69J00-284	SHIM, TAPPET (T:2.84)	16	
9-40	12892-69J00-286	SHIM, TAPPET (T:2.86)	16	
9-41	12892-69J00-288	SHIM, TAPPET (T:2.88)	16	
9-42	12892-69J00-290	SHIM, TAPPET (T:2.90)	16	
10	12911-87L00	VALVE, INTAKE	8	
11	12915-87L50	VALVE, EXHAUST	8	
12	12921-87J11	SPRING, VALVE	16	
13	12931-78G00	RETAINER, VALVE SPRING	16	
14	12932-24400	COTTER, VALVE	32	
15	12933-51E00	SEAT, VALVE SPRING	16	
16	09289-05012	OIL SEAL (5.5X11.5X9.3)	16	

DF70A E01
DF70A E40
DF70ATH E01
DF70ATH E40

FIG.121B

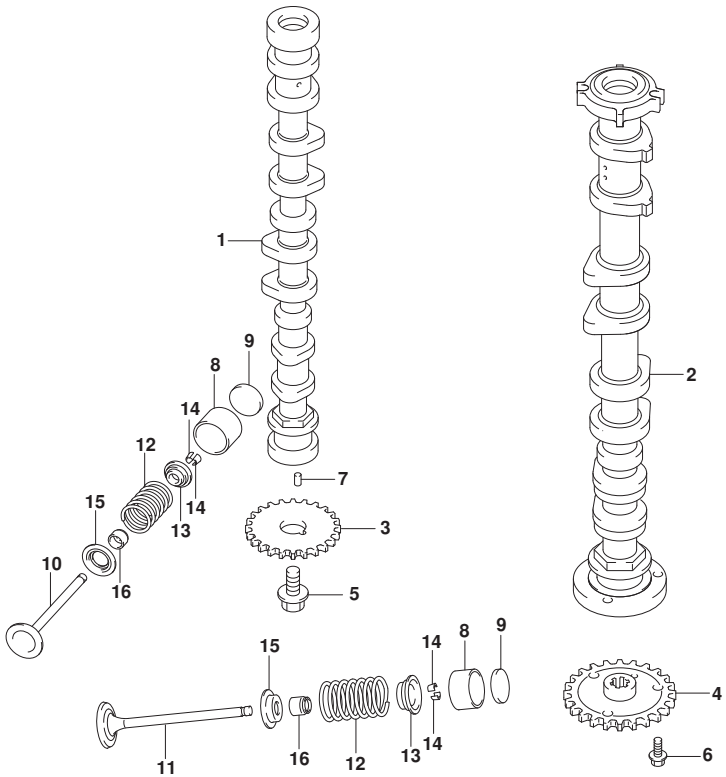

FIG.121B (1-B-12) CAMSHAFT (DF80A)

REF NO.	PART NO.	DESCRIPTION	Q'TY	REMARKS
1	12701-87L00	CAMSHAFT, INTAKE	1	
2	12705-87L00	CAMSHAFT, EXHAUST	1	
3	12741-90J01	SPROCKET, CAMSHAFT TIMING (NT:29)	1	
4	12748-87L00	SPROCKET, EXH CAMSHAFT (NT:29)	1	
5	12749-93J00	BOLT, CAMSHAFT	1	
6	01550-0612A	BOLT	3	
7	04221-05109	PIN	2	
8	12891-69J00	TAPPET	16	
9-1	12892-69J00-208	SHIM, TAPPET (T:2.08)	16	
9-2	12892-69J00-210	SHIM, TAPPET (T:2.10)	16	
9-3	12892-69J00-212	SHIM, TAPPET (T:2.12)	16	
9-4	12892-69J00-214	SHIM, TAPPET (T:2.14)	16	
9-5	12892-69J00-216	SHIM, TAPPET (T:2.16)	16	
9-6	12892-69J00-218	SHIM, TAPPET (T:2.18)	16	
9-7	12892-69J00-220	SHIM, TAPPET (T:2.20)	16	
9-8	12892-69J00-222	SHIM, TAPPET (T:2.22)	16	
9-9	12892-69J00-224	SHIM, TAPPET (T:2.24)	16	
9-10	12892-69J00-226	SHIM, TAPPET (T:2.26)	16	
9-11	12892-69J00-228	SHIM, TAPPET (T:2.28)	16	
9-12	12892-69J00-230	SHIM, TAPPET (T:2.30)	16	
9-13	12892-69J00-232	SHIM, TAPPET (T:2.32)	16	
9-14	12892-69J00-234	SHIM, TAPPET (T:2.34)	16	
9-15	12892-69J00-236	SHIM, TAPPET (T:2.36)	16	
9-16	12892-69J00-238	SHIM, TAPPET (T:2.38)	16	
9-17	12892-69J00-240	SHIM, TAPPET (T:2.40)	16	
9-18	12892-69J00-242	SHIM, TAPPET (T:2.42)	16	
9-19	12892-69J00-244	SHIM, TAPPET (T:2.44)	16	
9-20	12892-69J00-246	SHIM, TAPPET (T:2.46)	16	
9-21	12892-69J00-248	SHIM, TAPPET (T:2.48)	16	
9-22	12892-69J00-250	SHIM, TAPPET (T:2.50)	16	
9-23	12892-69J00-252	SHIM, TAPPET (T:2.52)	16	
9-24	12892-69J00-254	SHIM, TAPPET (T:2.54)	16	

FIG.121B

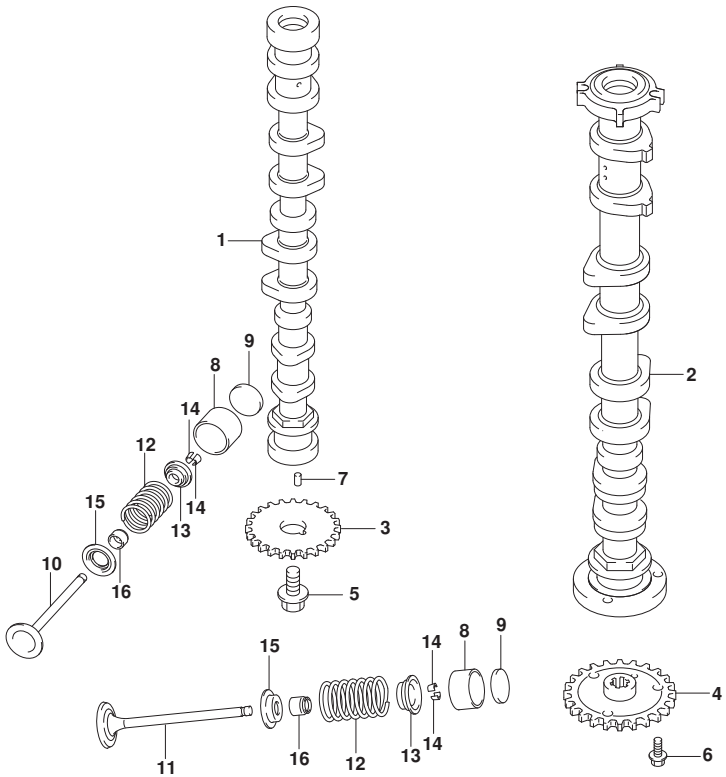

FIG.121B (1-B-13) CAMSHAFT (DF80A)

REF NO.	PART NO.	DESCRIPTION	Q'TY	REMARKS
9-25	12892-69J00-256	SHIM, TAPPET (T:2.56)	16	
9-26	12892-69J00-258	SHIM, TAPPET (T:2.58)	16	
9-27	12892-69J00-260	SHIM, TAPPET (T:2.60)	16	
9-28	12892-69J00-262	SHIM, TAPPET (T:2.62)	16	
9-29	12892-69J00-264	SHIM, TAPPET (T:2.64)	16	
9-30	12892-69J00-266	SHIM, TAPPET (T:2.66)	16	
9-31	12892-69J00-268	SHIM, TAPPET (T:2.68)	16	
9-32	12892-69J00-270	SHIM, TAPPET (T:2.70)	16	
9-33	12892-69J00-272	SHIM, TAPPET (T:2.72)	16	
9-34	12892-69J00-274	SHIM, TAPPET (T:2.74)	16	
9-35	12892-69J00-276	SHIM, TAPPET (T:2.76)	16	
9-36	12892-69J00-278	SHIM, TAPPET (T:2.78)	16	
9-37	12892-69J00-280	SHIM, TAPPET (T:2.80)	16	
9-38	12892-69J00-282	SHIM, TAPPET (T:2.82)	16	
9-39	12892-69J00-284	SHIM, TAPPET (T:2.84)	16	
9-40	12892-69J00-286	SHIM, TAPPET (T:2.86)	16	
9-41	12892-69J00-288	SHIM, TAPPET (T:2.88)	16	
9-42	12892-69J00-290	SHIM, TAPPET (T:2.90)	16	
10	12911-87L00	VALVE, INTAKE	8	
11	12915-87L50	VALVE, EXHAUST	8	
12	12921-87J11	SPRING, VALVE	16	
13	12931-78G00	RETAINER, VALVE SPRING	16	
14	12932-24400	COTTER, VALVE	32	
15	12933-51E00	SEAT, VALVE SPRING	16	
16	09289-05012	OIL SEAL (5.5X11.5X9.3)	16	

DF80A E01
DF80A E40

FIG.121C

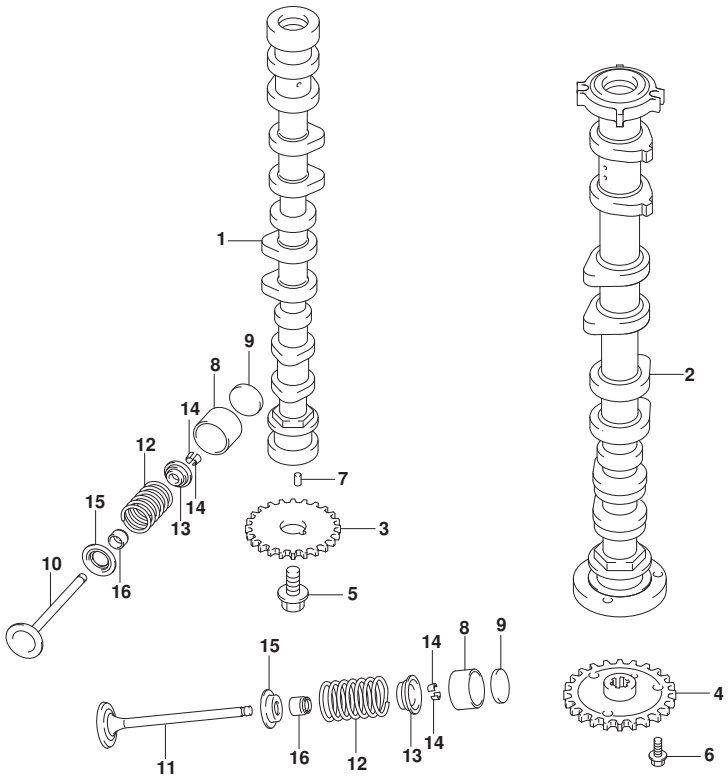

FIG.121C (1-B-14) CAMSHAFT (DF90A)(DF90ATH)(DF90AWQH)(DF100B)

REF NO.	PART NO.	DESCRIPTION	Q'TY	REMARKS
1	12701-87L10	CAMSHAFT, INTAKE	1	
2	12705-87L10	CAMSHAFT, EXHAUST	1	
3	12741-90J01	SPROCKET, CAMSHAFT TIMING (NT:29)	1	
4	12748-87L00	SPROCKET, EXH CAMSHAFT (NT:29)	1	
5	12749-93J00	BOLT, CAMSHAFT	1	
6	01550-0612A	BOLT	3	
7	04221-05109	PIN	2	
8	12891-69J00	TAPPET	16	
9-1	12892-69J00-208	SHIM, TAPPET (T:2.08)	16	
9-2	12892-69J00-210	SHIM, TAPPET (T:2.10)	16	
9-3	12892-69J00-212	SHIM, TAPPET (T:2.12)	16	
9-4	12892-69J00-214	SHIM, TAPPET (T:2.14)	16	
9-5	12892-69J00-216	SHIM, TAPPET (T:2.16)	16	
9-6	12892-69J00-218	SHIM, TAPPET (T:2.18)	16	
9-7	12892-69J00-220	SHIM, TAPPET (T:2.20)	16	
9-8	12892-69J00-222	SHIM, TAPPET (T:2.22)	16	
9-9	12892-69J00-224	SHIM, TAPPET (T:2.24)	16	
9-10	12892-69J00-226	SHIM, TAPPET (T:2.26)	16	
9-11	12892-69J00-228	SHIM, TAPPET (T:2.28)	16	
9-12	12892-69J00-230	SHIM, TAPPET (T:2.30)	16	
9-13	12892-69J00-232	SHIM, TAPPET (T:2.32)	16	
9-14	12892-69J00-234	SHIM, TAPPET (T:2.34)	16	
9-15	12892-69J00-236	SHIM, TAPPET (T:2.36)	16	
9-16	12892-69J00-238	SHIM, TAPPET (T:2.38)	16	
9-17	12892-69J00-240	SHIM, TAPPET (T:2.40)	16	
9-18	12892-69J00-242	SHIM, TAPPET (T:2.42)	16	
9-19	12892-69J00-244	SHIM, TAPPET (T:2.44)	16	
9-20	12892-69J00-246	SHIM, TAPPET (T:2.46)	16	
9-21	12892-69J00-248	SHIM, TAPPET (T:2.48)	16	
9-22	12892-69J00-250	SHIM, TAPPET (T:2.50)	16	
9-23	12892-69J00-252	SHIM, TAPPET (T:2.52)	16	
9-24	12892-69J00-254	SHIM, TAPPET (T:2.54)	16	

FIG.121C

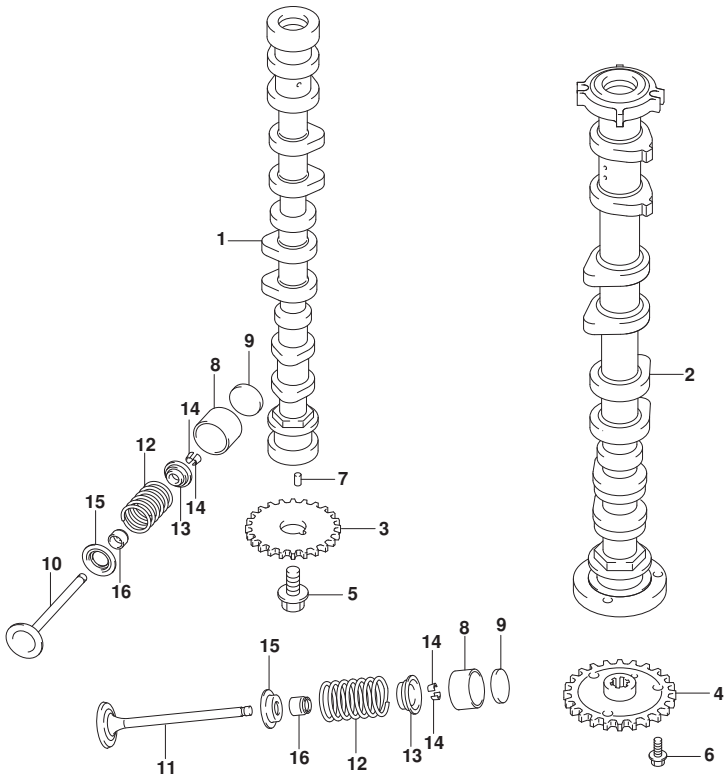

FIG.121C (1-B-15) CAMSHAFT (DF90A)(DF90ATH)(DF90AWQH)(DF100B)

REF NO.	PART NO.	DESCRIPTION	Q'TY	REMARKS
9-25	12892-69J00-256	SHIM, TAPPET (T:2.56)	16	
9-26	12892-69J00-258	SHIM, TAPPET (T:2.58)	16	
9-27	12892-69J00-260	SHIM, TAPPET (T:2.60)	16	
9-28	12892-69J00-262	SHIM, TAPPET (T:2.62)	16	
9-29	12892-69J00-264	SHIM, TAPPET (T:2.64)	16	
9-30	12892-69J00-266	SHIM, TAPPET (T:2.66)	16	
9-31	12892-69J00-268	SHIM, TAPPET (T:2.68)	16	
9-32	12892-69J00-270	SHIM, TAPPET (T:2.70)	16	
9-33	12892-69J00-272	SHIM, TAPPET (T:2.72)	16	
9-34	12892-69J00-274	SHIM, TAPPET (T:2.74)	16	
9-35	12892-69J00-276	SHIM, TAPPET (T:2.76)	16	
9-36	12892-69J00-278	SHIM, TAPPET (T:2.78)	16	
9-37	12892-69J00-280	SHIM, TAPPET (T:2.80)	16	
9-38	12892-69J00-282	SHIM, TAPPET (T:2.82)	16	
9-39	12892-69J00-284	SHIM, TAPPET (T:2.84)	16	
9-40	12892-69J00-286	SHIM, TAPPET (T:2.86)	16	
9-41	12892-69J00-288	SHIM, TAPPET (T:2.88)	16	
9-42	12892-69J00-290	SHIM, TAPPET (T:2.90)	16	
10	12911-87L00	VALVE, INTAKE	8	
11	12915-87L50	VALVE, EXHAUST	8	
12	12921-87J11	SPRING, VALVE	16	
13	12931-78G00	RETAINER, VALVE SPRING	16	
14	12932-24400	COTTER, VALVE	32	
15	12933-51E00	SEAT, VALVE SPRING	16	
16	09289-05012	OIL SEAL (5.5X11.5X9.3)	16	

DF90A E01
DF90A E40
DF90ATH E01
DF90ATH E40
DF90AWQH E40
DF100B E01
DF100B E40

FIG.122A

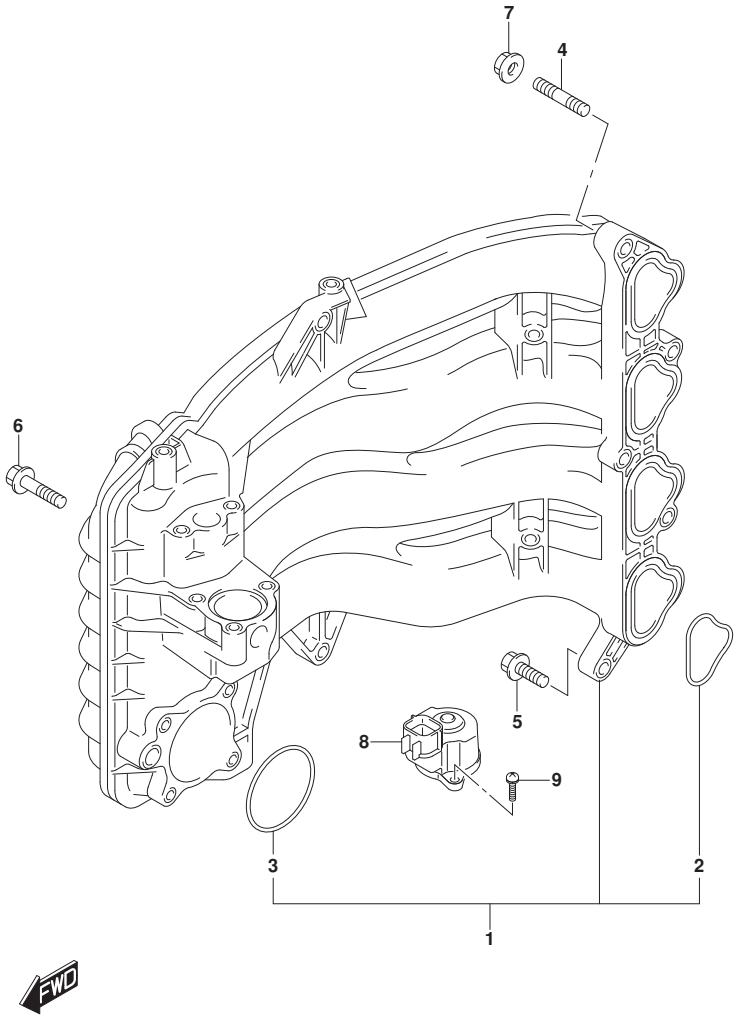

FIG.122A (1-C-2) INTAKE MANIFOLD

REF NO.	PART NO.	DESCRIPTION	Q'TY	REMARKS
1	13110-87L00	MANIFOLD, INTAKE	1	
2	13119-87L00	.GASKET, INTAKE MANIFOLD	4	
3	13125-87L00	.GASKET, THROTTLE BODY	1	
4	01421-08257	STUD BOLT	2	
5	01550-0830C	BOLT	4	
6	01550-0845C	BOLT	1	
7	08316-1008C	NUT	2	
8	18137-87L02	VALVE, IAC	1	
9	02112-34167	SCREW	3	

DF90A_E01_020_122A
INTAKE MANIFOLD

FIG.134A

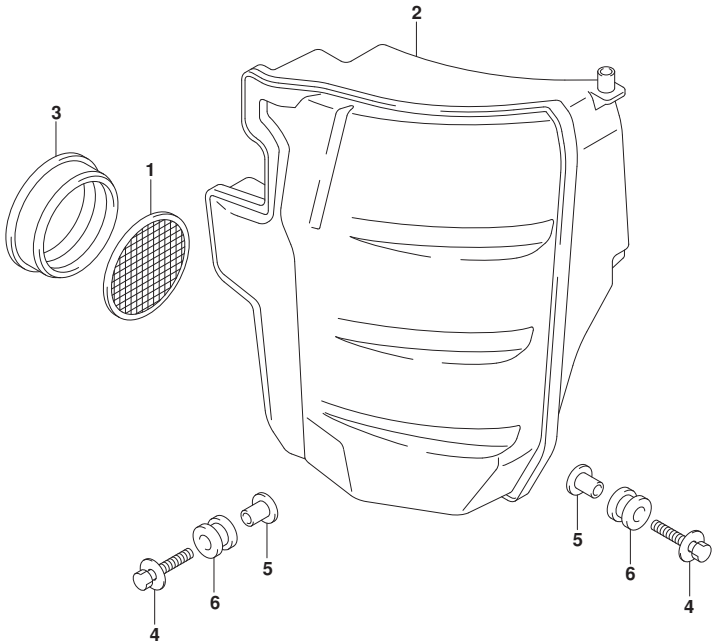

FIG.134A (1-C-3) SILENCER

REF NO.	PART NO.	DESCRIPTION	Q'TY	REMARKS
1	13710-99E00	ARRESTER, FLAME	1	
2	13810-87L00	SILENCER	1	
3	13813-87L01	HOLDER, FLAME ARRESTER	1	
4	09116-06215	BOLT (6X30)	2	
5	09169-06075	WASHER	2	
6	09320-09059	CUSHION	2	

DF90A_E01_020_134A
SILENCER

FIG.136A

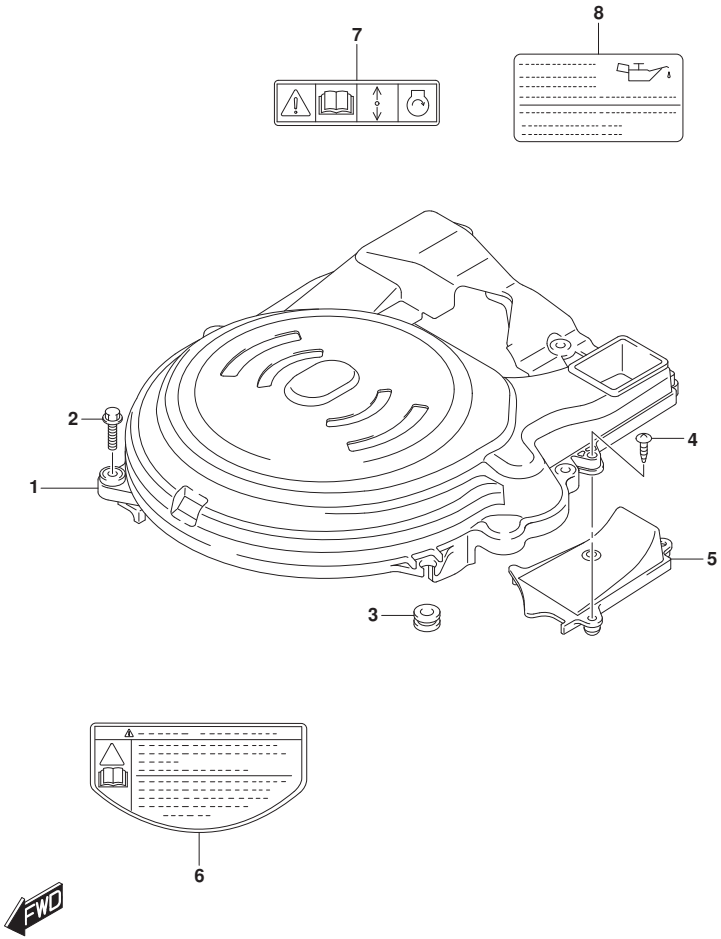

FIG.136A (1-C-4) RING GEAR COVER

REF NO.	PART NO.	DESCRIPTION	Q'TY	REMARKS
1	11510-87L03	COVER, RING GEAR	1	
2	01550-0630C	BOLT	4	
3	09320-09016	CUSHION	1	
4	03542-06209	SCREW	2	
5	11514-87L00	PLATE, RING GEAR COVER	1	
6	61472-88L01	LABEL, MAG COVER	1	
7	69711-93E11	LABEL (S.I.G.P.)	1	
8	61494-87L02	LABEL, OIL & CLEARANCE	1	

DF90A_E01_020_136A
RING GEAR COVER

FIG.140A

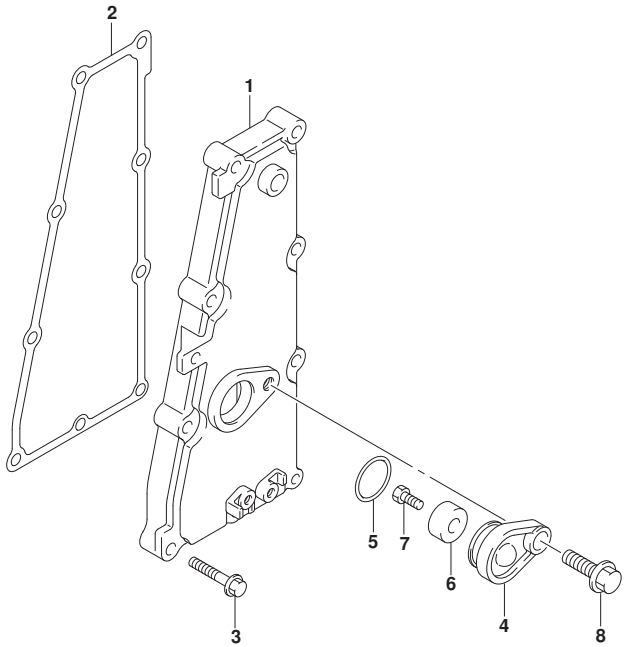

FIG.140A (1-C-5) EXHAUST COVER

REF NO.	PART NO.	DESCRIPTION	Q'TY	REMARKS
1	14141-87L00	COVER, EXHAUST	1	
2	14151-87L00	GASKET, EXHAUST COVER	1	
3	01550-06307	BOLT	9	
4	11261-93J00	COVER, PROTECTION ANODE	1	
5	09280-22019	O RING (D:1.9,ID:21.8)	1	
6	55321-87J01	ANODE, PROTECTION	1	
7	09103-06281	BOLT (6X14)	1	
8	01550-0820C	BOLT	1	

DF90A_E01_020_140A
EXHAUST COVER

FIG.143A

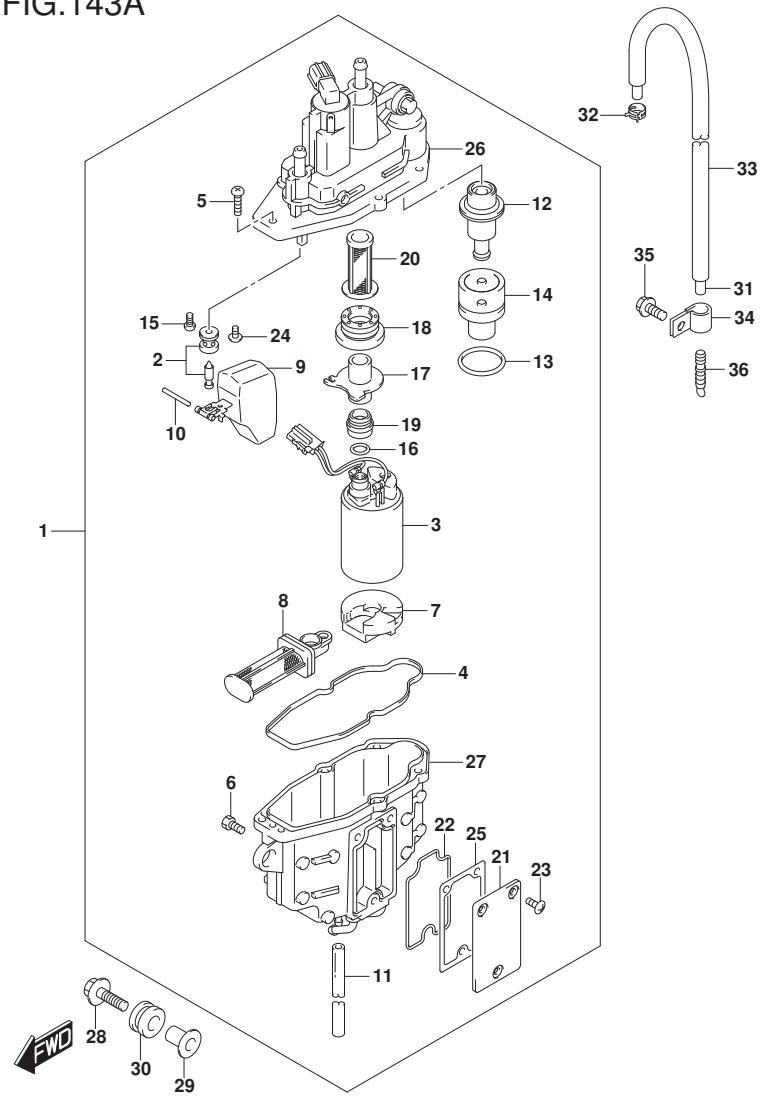

FIG.143A (1-C-6) FUEL VAPOR SEPARATOR (E01)

REF NO.	PART NO.	DESCRIPTION	Q'TY	REMARKS
1	15600-92J40	SEPARATOR ASSY, FUEL VAPOR	1	
2	13370-88L00	.VALVE ASSY, NEEDLE	1	
3	15200-92J20	.PUMP ASSY, FUEL	1	
4	15626-92J01	.SEAL	1	
5	15628-99E00	.SCREW (L:15)	5	
6	15629-99E10	.SCREW, DRAIN	1	
7	15641-88L00	.SPACER	1	
8	15642-88L00	.FILTER ASSY	1	
9	15650-99E00	.FLOAT	1	
10	15654-88L00	.PIN	1	
11	15683-87J00	.HOSE, DRAIN (L:120)	1	
12	15760-88L00	.REGULATOR ASSY	1	
13	15644-88L00	.O RING	1	
14	15645-88L00	.HOLDER, REGULATOR	1	
15	02112-0408A	.SCREW	1	
16	15648-92J00	.RING	1	
17	15643-88L10	.JOINT	1	
18	15641-88L31	.BUSH	1	
19	15641-88L51	.BUSH	1	
20	15642-88L10	.FILTER	1	
21	15612-88L00	.COVER	1	
22	15613-88L00	.O RING	1	
23	15614-88L00	.SCREW	3	
24	02142-0408B	.SCREW	1	
25	15613-92J00	.GASKET	1	
26	15620-92J00	.CASE ASSY, UPPER	1	
27	15610-92J00	.CASE ASSY, LOWER	1	

DF90A_E01_020_143A
FUEL VAPOR SEPARATOR

FIG.143A

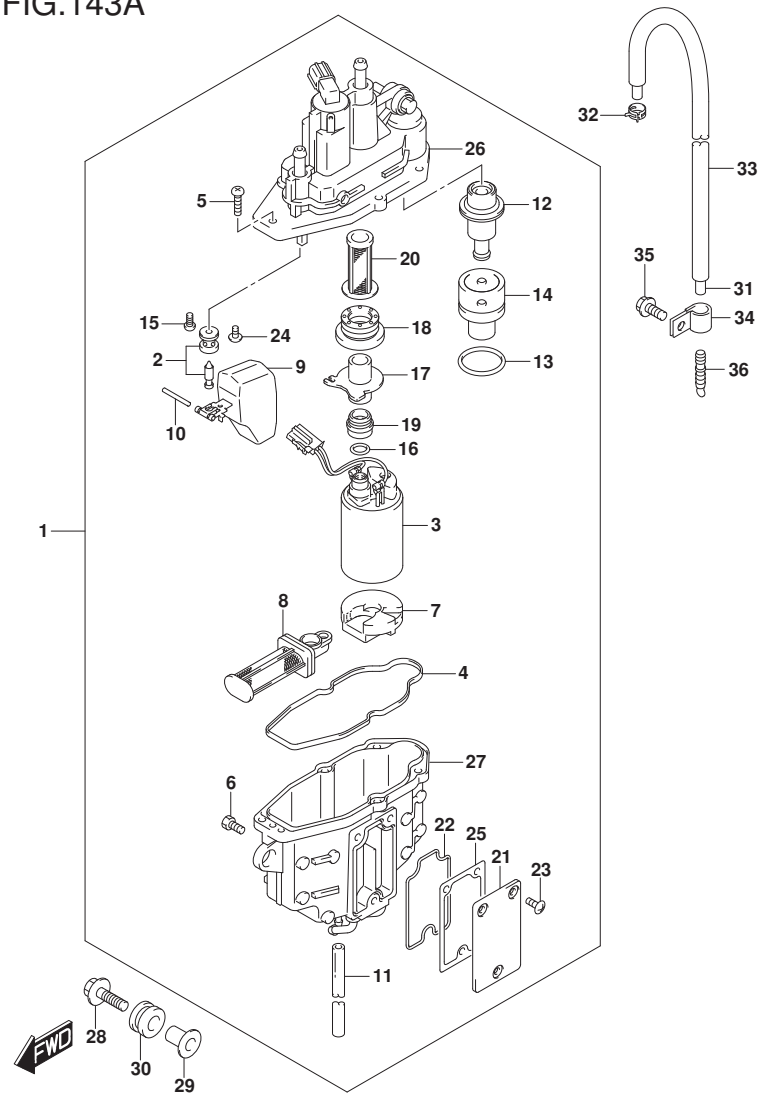

FIG.143A (1-C-7) FUEL VAPOR SEPARATOR (E01)

REF NO.	PART NO.	DESCRIPTION	Q'TY	REMARKS
28	09116-06217	BOLT (6X30)	3	
29	09169-06090	WASHER	3	
30	15691-92J00	CUSHION	3	
31	09352-50003-490	HOSE (5X8.2X490)	1	
32	09401-08412	CLIP	1	
33	18498-99E01	PROTECTOR, EVAP HOSE (L:390)	1	
34	09403-12324	CLAMP	1	
35	01550-0612C	BOLT	1	
36	55127-87D00	PLUG, UNION	1	

DF70A E01
DF70ATH E01
DF80A E01
DF90A E01
DF90ATH E01
DF100B E01

DF90A_E01_020_143A
FUEL VAPOR SEPARATOR

FIG.143B

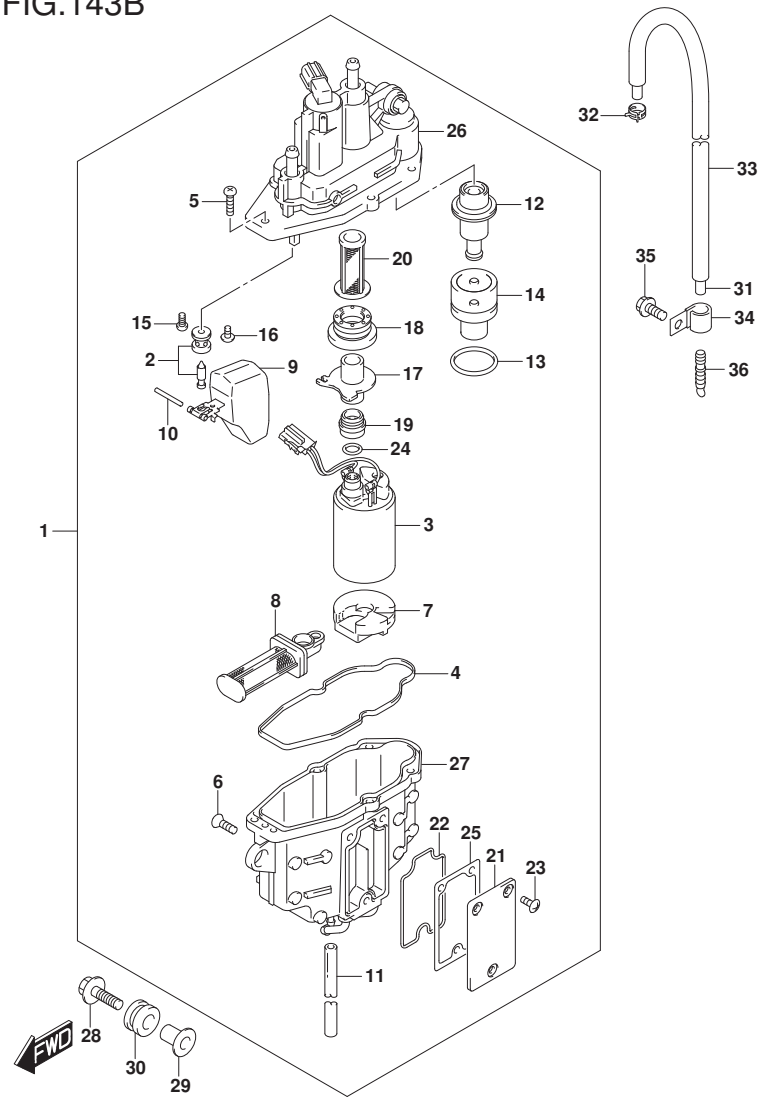

FIG.143B (1-C-8) FUEL VAPOR SEPARATOR (E40)

REF NO.	PART NO.	DESCRIPTION	Q'TY	REMARKS
1	15600-92J50	SEPARATOR ASSY, FUEL VAPOR	1	
2	13370-88L10	.VALVE ASSY, NEEDLE	1	
3	15200-92J30	.PUMP ASSY, FUEL	1	
4	15626-92J10	.SEAL	1	
5	15628-99E00	.SCREW (L:15)	5	
6	15629-99E10	.SCREW, DRAIN	1	
7	15641-88L10	.SPACER	1	
8	15642-88L00	.FILTER ASSY	1	
9	15650-99E00	.FLOAT	1	
10	15654-88L00	.PIN	1	
11	15683-87J00	.HOSE, DRAIN (L:120)	1	
12	15760-88L00	.REGULATOR ASSY	1	
13	15644-88L10	.O RING	1	
14	15645-88L00	.HOLDER, REGULATOR	1	
15	13614-89J00	.SCREW	1	
16	13614-93J00	.SCREW	1	
17	15643-88L10	.JOINT	1	
18	15641-88L31	.BUSH	1	
19	15641-88L51	.BUSH	1	
20	15642-88L10	.FILTER	1	
21	15612-88L00	.COVER	1	
22	15613-88L00	.O RING	1	
23	15614-88L00	.SCREW	3	
24	15648-92J00	.RING	1	
25	15613-92J00	.GASKET	1	
26	15620-92J10	.CASE ASSY, UPPER	1	
27	15610-92J00	.CASE ASSY, LOWER	1	

DF90A_E01_020_143B
FUEL VAPOR SEPARATOR

FIG.143B

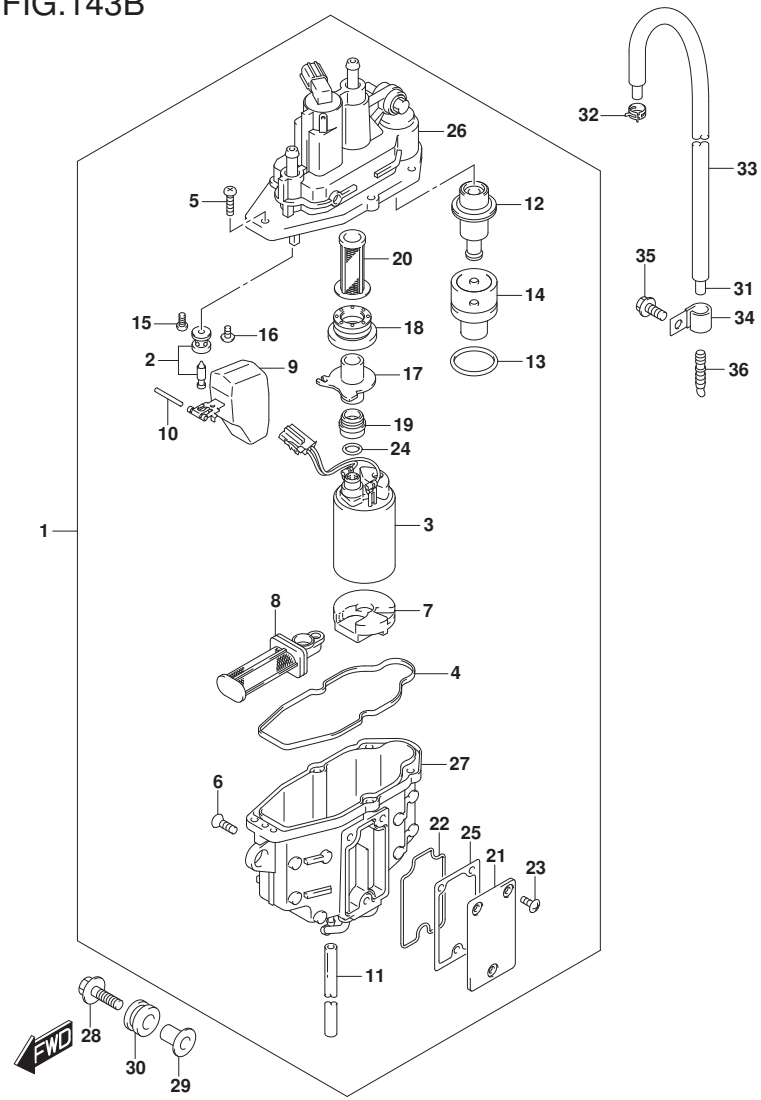

FIG.143B (1-C-9) FUEL VAPOR SEPARATOR (E40)

REF NO.	PART NO.	DESCRIPTION	Q'TY	REMARKS
28	09116-06217	BOLT (6X30)	3	
29	09169-06090	WASHER	3	
30	15691-92J00	CUSHION	3	
31	09352-50003-490	HOSE (5X8.2X490)	1	
32	09401-08412	CLIP	1	
33	18498-99E01	PROTECTOR, EVAP HOSE(L:390)	1	
34	09403-12324	CLAMP	1	
35	01550-0612C	BOLT	1	
36	55127-87D00	PLUG, UNION	1	

DF70A E40
DF70ATH E40
DF80A E40
DF90A E40
DF90ATH E40
DF90AWQH E40
DF100B E40

DF90A_E01_020_143B
FUEL VAPOR SEPARATOR

FIG.144A

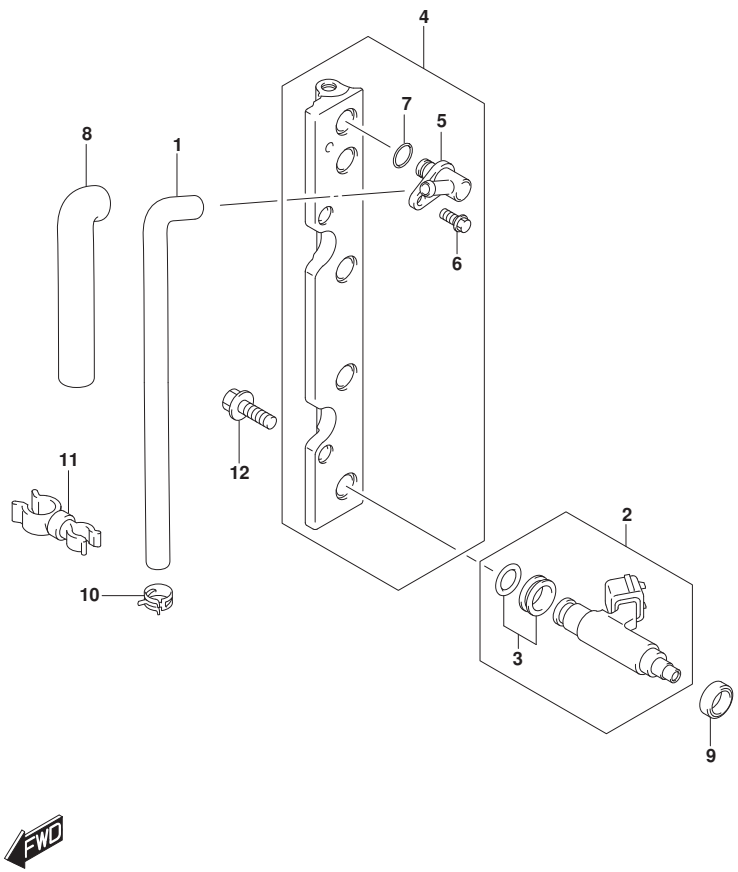

FIG.144A (1-C-10) FUEL INJECTOR (E01)

REF NO.	PART NO.	DESCRIPTION	Q'TY	REMARKS
1	15681-92J01	HOSE, FUEL (SEPARATOR TO DLVY)	1	
2	15710-82K50	INJECTOR ASSY, FUEL	4	
3	15716-65DT0	.GROMMET SET, FUEL INJECTOR	4	
4	15750-87L30	PIPE, DELIVERY	1	
5	15830-87L30	.JOINT, FUEL MAIN	1	
6	09103-06281	.BOLT (6X14)	1	
7	09280-08012	.O RING (D:1.9,ID:7.8)	1	
8	18498-87J51	PROTECTOR, FUEL HOSE (L:160)	1	
9	09320-08062	CUSHION	4	
10	09401-11425	CLIP	2	
11	09408-00233	CLAMP	1	
12	01550-0825C	BOLT	2	

DF70A E01
DF70ATH E01
DF80A E01
DF90A E01
DF90ATH E01
DF100B E01

DF90A_E01_020_144A
FUEL INJECTOR

FIG.144B

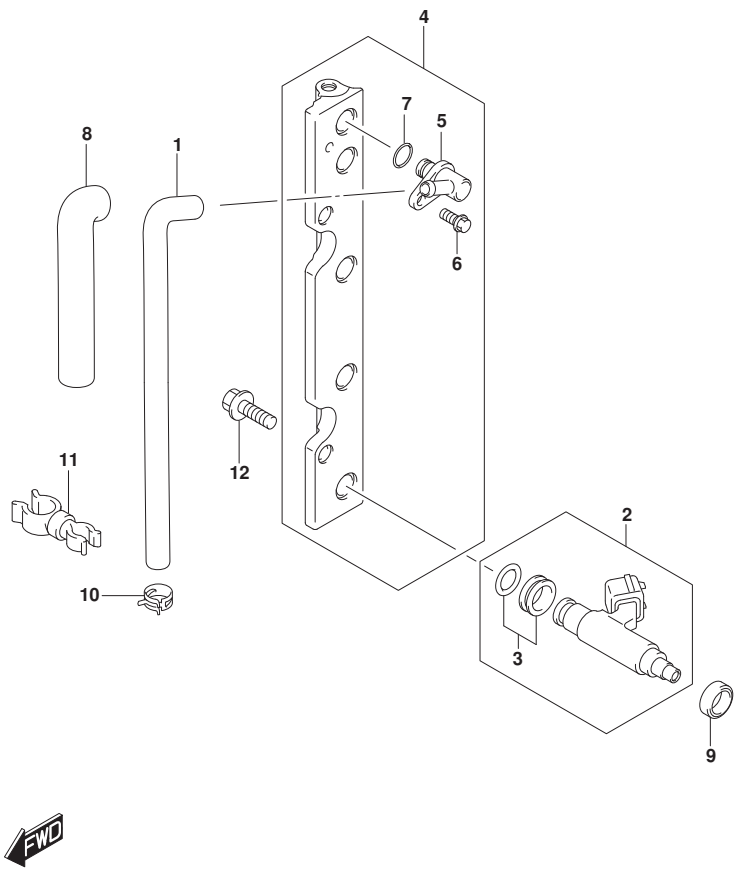

FIG.144B (1-C-11) FUEL INJECTOR (E40)

REF NO.	PART NO.	DESCRIPTION	Q'TY	REMARKS
1	15681-92J01	HOSE, FUEL (SEPARATOR TO DLVY)	1	
2	15710-82K50	INJECTOR ASSY, FUEL	4	
3	15716-65DT0	.GROMMET SET, FUEL INJECTOR	4	
4	15750-87L40	PIPE, DELIVERY	1	
5	15830-87L40	.JOINT, FUEL MAIN	1	
6	09103-06281	.BOLT (6X14)	1	
7	09280-08012	.O RING (D:1.9,ID:7.8)	1	
8	18498-87J51	PROTECTOR, FUEL HOSE (L:160)	1	
9	09320-08062	CUSHION	4	
10	09401-11425	CLIP	2	
11	09408-00233	CLAMP	1	
12	01550-0825C	BOLT	2	

DF70A E40
DF70ATH E40
DF80A E40
DF90A E40
DF90ATH E40
DF90AWQH E40
DF100B E40

DF90A_E01_020_144B
FUEL INJECTOR

FIG.146A

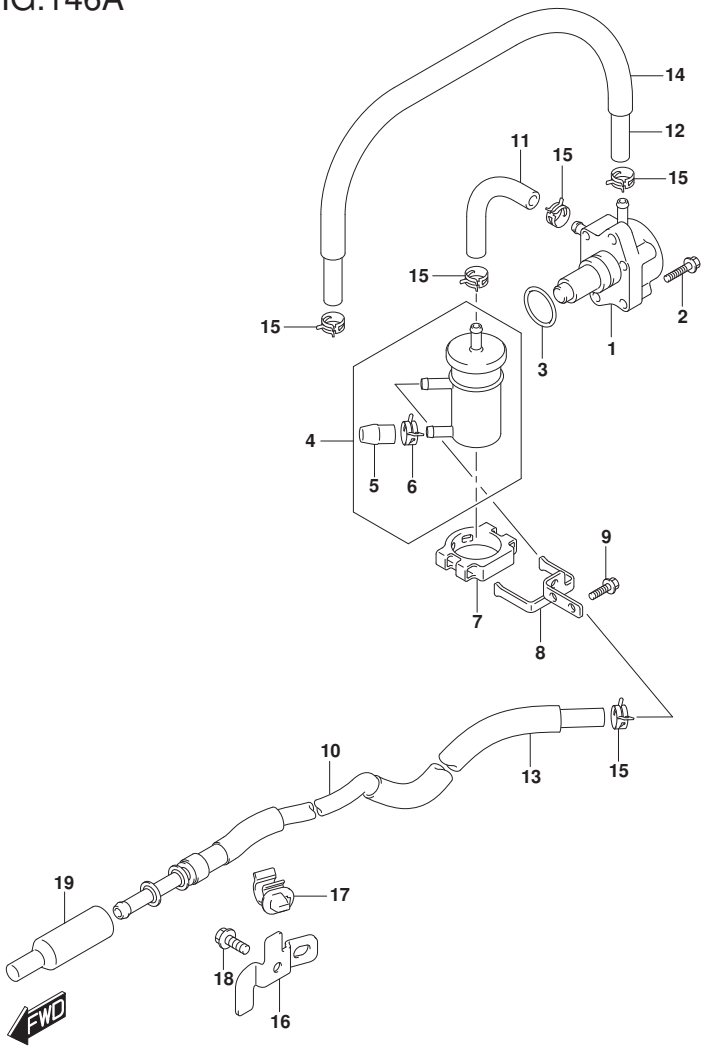

FIG.146A (1-C-12) FUEL PUMP (DF70A)(DF70ATH)(DF80A)(DF90A)(DF90ATH)

REF NO.	PART NO.	DESCRIPTION	Q'TY	REMARKS
1	15100-90J11	PUMP ASSY, FUEL	1	
2	01550-0625C	BOLT	2	
3	09280-26005	O RING (D:2.4,ID:26.2)	1	
4	15410-87L00	FILTER, FUEL	1	
5	15419-87J00	.CAP, FUEL FILTER	1	
6	09401-11423	.CLIP	1	
7	15422-96J00	CLAMP, FILTER	1	
8	15421-87L00	BRACKET, FUEL FILTER	1	
9	01550-0616C	BOLT	2	
10	15190-87L00	HOSE, FUEL (JOINT TO FILTER)	1	
11	15192-87L11	HOSE, FUEL (FILTER TO PUMP)	1	
12	09343-70503-600	HOSE (7X12X600)	1	L:600->510
13	18498-87J21	PROTECTOR, FUEL HOSE (L:340)	1	
14	18498-99E11	PROTECTOR, FUEL HOSE (L:610)	1	L:610->450
15	09401-11423	CLIP	5	
16	15198-87L00	BRACKET, FUEL HOSE	1	
17	09403-11320	CLAMP	1	
18	01550-0612C	BOLT	1	
19	15419-92J00	CAP, JOINT	1	

DF70A E01
DF70A E40
DF70ATH E01
DF70ATH E40
DF80A E01
DF80A E40
DF90A E01
DF90A E40
DF90ATH E01
DF90ATH E40

DF90A_E01_020_146A
FUEL PUMP

FIG.146B

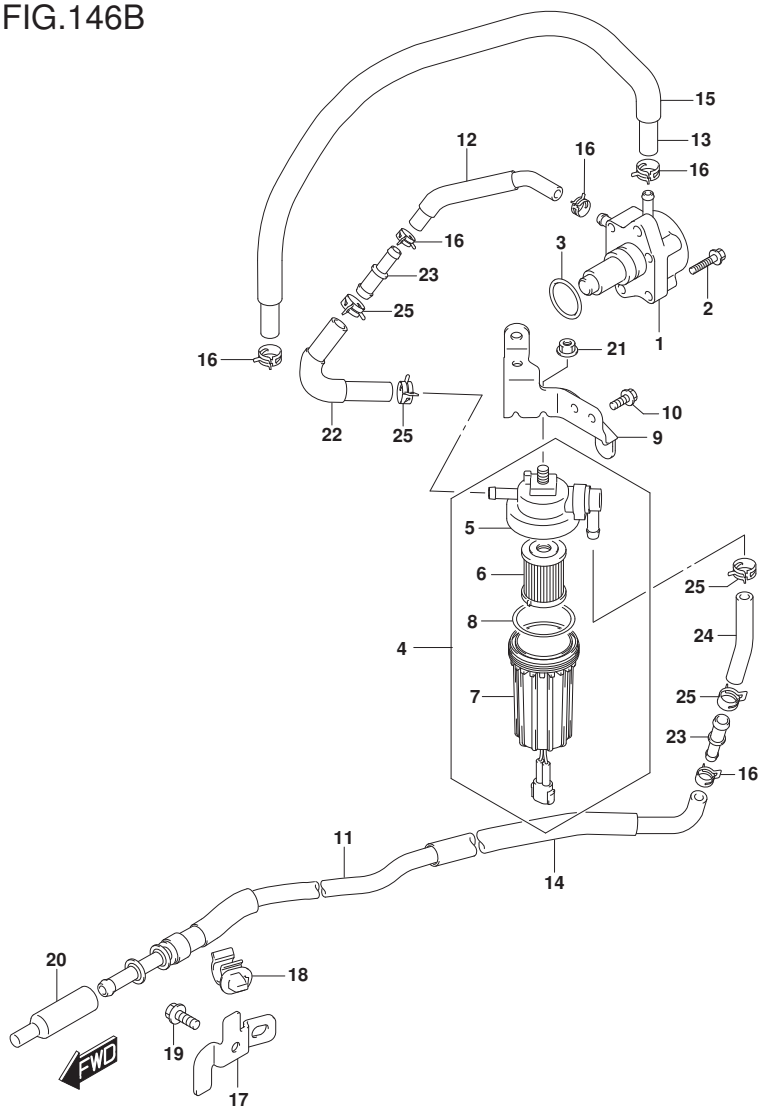

FIG.146B (1-C-13) FUEL PUMP (DF90AWQH)(DF100B)

REF NO.	PART NO.	DESCRIPTION	Q'TY	REMARKS
1	15100-90J11	PUMP ASSY, FUEL	1	
2	01550-0625C	BOLT	2	
3	09280-26005	O RING (D:2.4,ID:26.2)	1	
4	15410-92J10	FILTER, FUEL	1	
5	15411-92J10	.CAP, FUEL FILTER	1	
6	15412-92J00	.FILTER, FUEL	1	
7	15413-92J00	.CASE, FUEL FILTER	1	
8	15415-92J00	.SEAL, FUEL FILTER	1	
9	15421-87L10	BRACKET, FUEL FILTER	1	
10	01550-0616C	BOLT	2	
11	15190-87L20	HOSE, FUEL (JOINT TO FILTER)	1	
12	15192-87L30	HOSE, FUEL (FILTER TO PUMP NO.1)	1	
13	09343-70503-600	HOSE (7X12X600)	1	L:600->510
14	18498-96J21	PROTECTOR, FUEL HOSE (L:370)	1	
15	18498-99E11	PROTECTOR, FUEL HOSE (L:610)	1	L:610->450
16	09401-11423	CLIP	5	
17	15198-87L00	BRACKET, FUEL HOSE	1	
18	09403-11320	CLAMP	1	
19	01550-0612C	BOLT	1	
20	15419-92J00	CAP, JOINT	1	
21	08316-10087	NUT	1	
22	15195-87L00	HOSE, FUEL (FILTER TO PUMP NO.2)	1	
23	15831-96L00	UNION,2 WAY FUEL HOSE	2	
24	15195-96L00	HOSE,FUEL(PUMP TO VST NO.1)	1	
25	09401-14409	CLIP	4	

DF90AWQH E40
DF100B E01
DF100B E40

DF90A_E01_020_146B
FUEL PUMP

FIG.160A

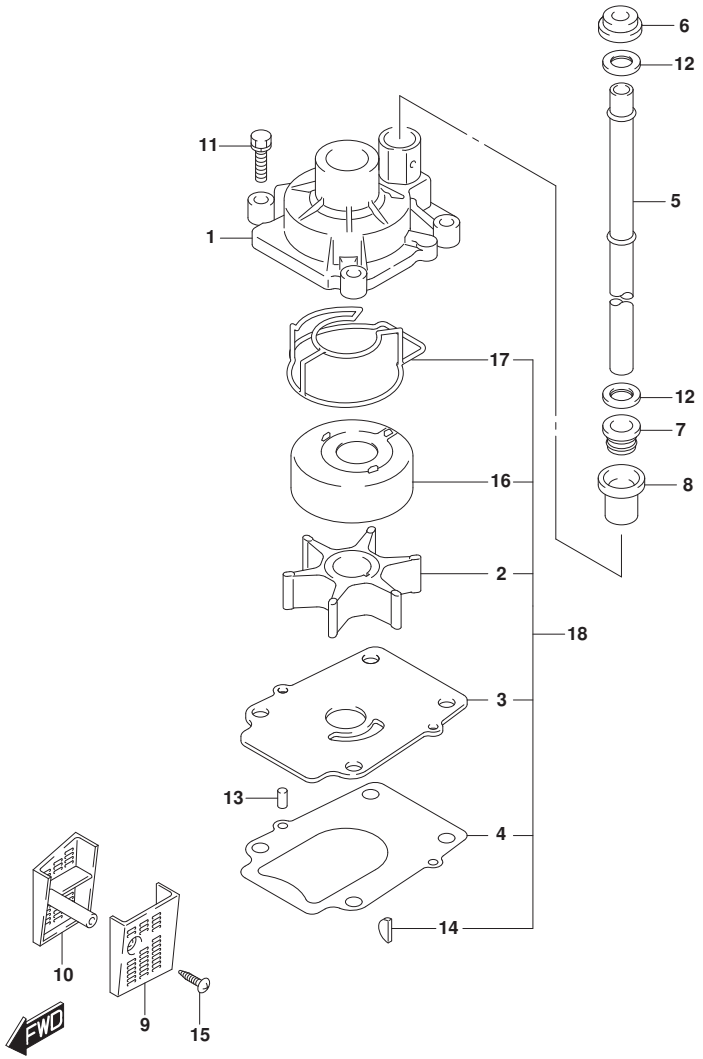

FIG.160A (1-C-14) WATER PUMP (DF70A E01)

REF NO.	PART NO.	DESCRIPTION	Q'TY	REMARKS
1	17410-99E10	CASE, WATER PUMP	1	
2	17461-87E12	IMPELLER, WATER PUMP	1	
3	17471-87L01	PANEL, PUMP CASE UNDER	1	
4	17472-87L00	GASKET, PUMP CASE PANEL	1	
5-1	17561-87L20	TUBE, WATER (L)	1	W/TRANSOM(L)
5-2	17561-87L30	TUBE, WATER (X)	1	W/TRANSOM(X)
6	17562-87L01	BUSH, WATER TUBE UPPER	1	
7	17563-87D01	BUSH, WATER TUBE LOWER	1	
8	17564-87D00	BUSH, WATER PUMP CASE	1	
9	17631-87L00	FILTER, WATER PORT SIDE	1	
10	17632-87L01	FILTER, WATER STBD SIDE	1	
11	29116-93J10	BOLT	4	
12	09161-16008	WASHER (15.8X26X1)	2	
13	09202-06031	PIN (6X12)	2	
14	09420-04009	KEY	1	
15	09132-04034	SCREW (4X18)	1	
16	17413-99E11	SLEEVE, WATER PUMP CASE	1	
17	17416-99E11	SEALING, WATER PUMP CASE NO.1	1	
18	17400-87L04	WATER PUMP REPAIR KIT	1	OPT

DF70A E01

DF90A_E01_020_160A
WATER PUMP

FIG.160B

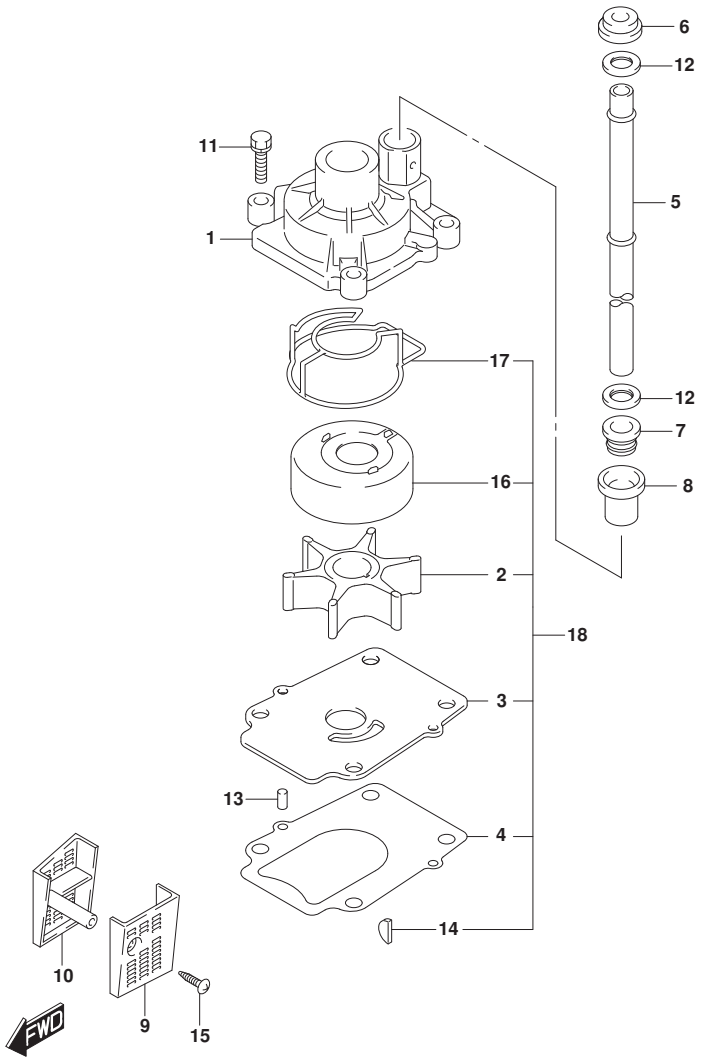

FIG.160B (1-C-15) WATER PUMP (DF70ATH E01)

REF NO.	PART NO.	DESCRIPTION	Q'TY	REMARKS
1	17410-99E10	CASE, WATER PUMP	1	
2	17461-87E12	IMPELLER, WATER PUMP	1	
3	17471-87L01	PANEL, PUMP CASE UNDER	1	
4	17472-87L00	GASKET, PUMP CASE PANEL	1	
5	17561-87L20	TUBE, WATER (L)	1	
6	17562-87L01	BUSH, WATER TUBE UPPER	1	
7	17563-87D01	BUSH, WATER TUBE LOWER	1	
8	17564-87D00	BUSH, WATER PUMP CASE	1	
9	17631-87L00	FILTER, WATER PORT SIDE	1	
10	17632-87L01	FILTER, WATER STBD SIDE	1	
11	29116-93J10	BOLT	4	
12	09161-16008	WASHER (15.8X26X1)	2	
13	09202-06031	PIN (6X12)	2	
14	09420-04009	KEY	1	
15	09132-04034	SCREW (4X18)	1	
16	17413-99E11	SLEEVE, WATER PUMP CASE	1	
17	17416-99E11	SEALING, WATER PUMP CASE NO.1	1	
18	17400-87L04	WATER PUMP REPAIR KIT	1	OPT

DF70ATH E01

DF90A_E01_020_160B
WATER PUMP

FIG.160C

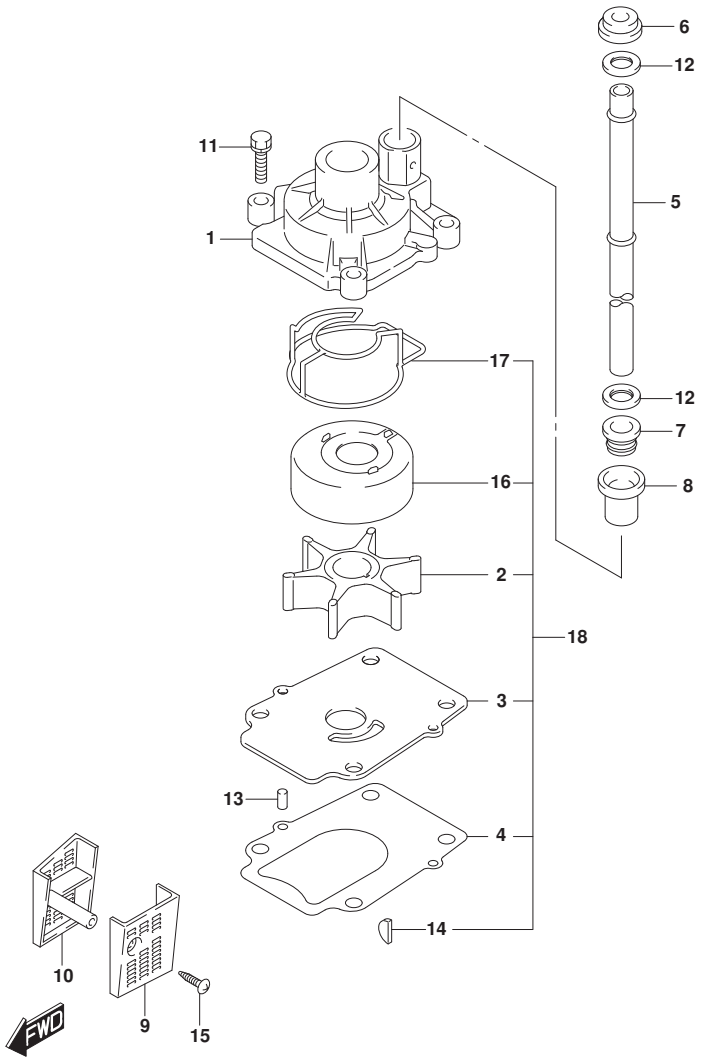

FIG.160C (1-D-2) WATER PUMP (DF80A E01)

REF NO.	PART NO.	DESCRIPTION	Q'TY	REMARKS
1	17410-99E10	CASE, WATER PUMP	1	
2	17461-87E12	IMPELLER, WATER PUMP	1	
3	17471-87L01	PANEL, PUMP CASE UNDER	1	
4	17472-87L00	GASKET, PUMP CASE PANEL	1	
5-1	17561-87L20	TUBE, WATER (L)	1	W/TRANSOM(L)
5-2	17561-87L30	TUBE, WATER (X)	1	W/TRANSOM(X)
6	17562-87L01	BUSH, WATER TUBE UPPER	1	
7	17563-87D01	BUSH, WATER TUBE LOWER	1	
8	17564-87D00	BUSH, WATER PUMP CASE	1	
9	17631-87L00	FILTER, WATER PORT SIDE	1	
10	17632-87L01	FILTER, WATER STBD SIDE	1	
11	29116-93J10	BOLT	4	
12	09161-16008	WASHER (15.8X26X1)	2	
13	09202-06031	PIN (6X12)	2	
14	09420-04009	KEY	1	
15	09132-04034	SCREW (4X18)	1	
16	17413-99E11	SLEEVE, WATER PUMP CASE	1	
17	17416-99E11	SEALING, WATER PUMP CASE NO.1	1	
18	17400-87L04	WATER PUMP REPAIR KIT	1	OPT

DF80A E01

DF90A_E01_020_160C
WATER PUMP

FIG.160D

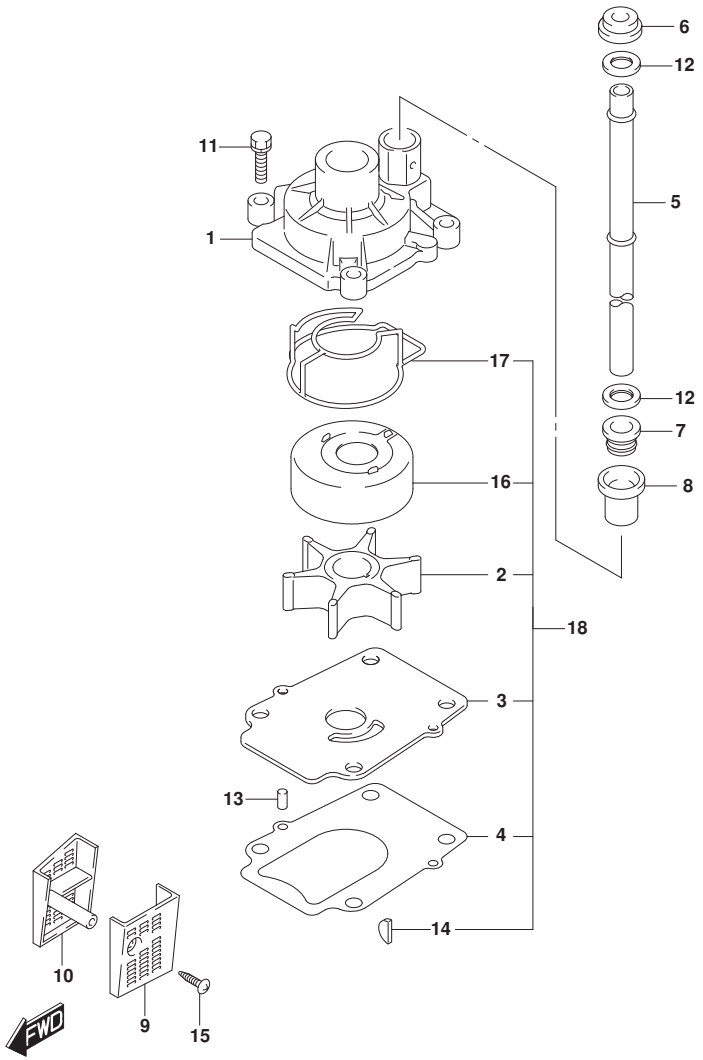

FIG.160D (1-D-3) WATER PUMP (DF90A E01)

REF NO.	PART NO.	DESCRIPTION	Q'TY	REMARKS
1	17410-99E10	CASE, WATER PUMP	1	
2	17461-87E12	IMPELLER, WATER PUMP	1	
3	17471-87L01	PANEL, PUMP CASE UNDER	1	
4	17472-87L00	GASKET, PUMP CASE PANEL	1	
5-1	17561-87L20	TUBE, WATER (L)	1	W/TRANSOM(L)
5-2	17561-87L30	TUBE, WATER (X)	1	W/TRANSOM(X)
6	17562-87L01	BUSH, WATER TUBE UPPER	1	
7	17563-87D01	BUSH, WATER TUBE LOWER	1	
8	17564-87D00	BUSH, WATER PUMP CASE	1	
9	17631-87L00	FILTER, WATER PORT SIDE	1	
10	17632-87L01	FILTER, WATER STBD SIDE	1	
11	29116-93J10	BOLT	4	
12	09161-16008	WASHER (15.8X26X1)	2	
13	09202-06031	PIN (6X12)	2	
14	09420-04009	KEY	1	
15	09132-04034	SCREW (4X18)	1	
16	17413-99E11	SLEEVE, WATER PUMP CASE	1	
17	17416-99E11	SEALING, WATER PUMP CASE NO.1	1	
18	17400-87L04	WATER PUMP REPAIR KIT	1	OPT

DF90A E01

DF90A_E01_020_160D
WATER PUMP

FIG.160E

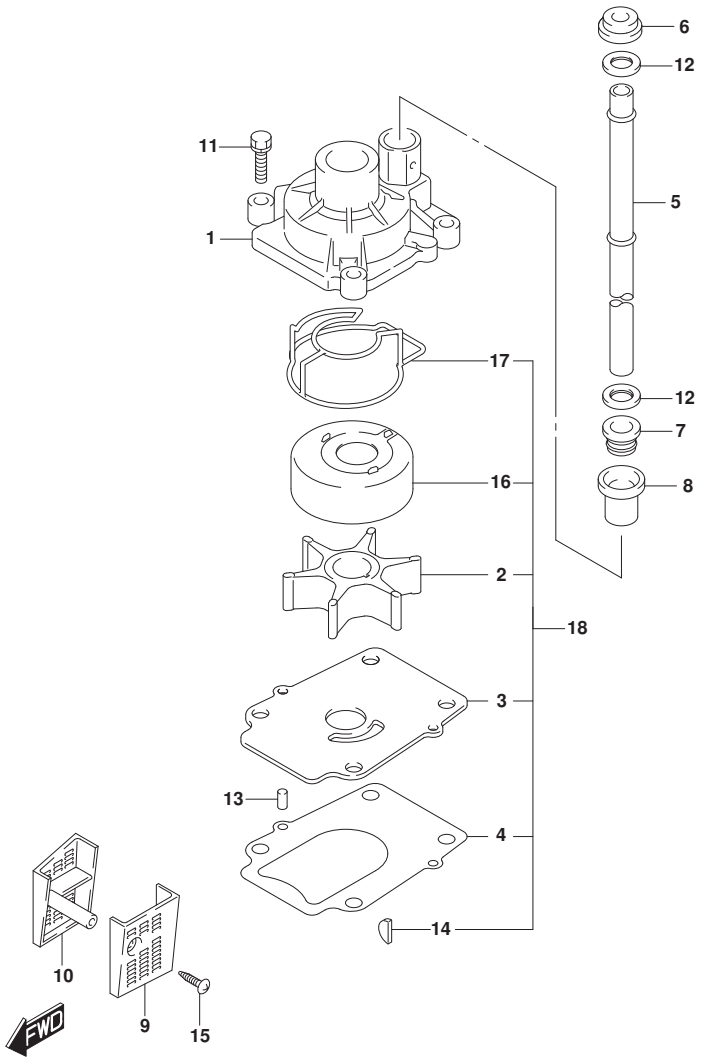

FIG.160E (1-D-4) WATER PUMP (DF90ATH E01)

REF NO.	PART NO.	DESCRIPTION	Q'TY	REMARKS
1	17410-99E10	CASE, WATER PUMP	1	
2	17461-87E12	IMPELLER, WATER PUMP	1	
3	17471-87L01	PANEL, PUMP CASE UNDER	1	
4	17472-87L00	GASKET, PUMP CASE PANEL	1	
5	17561-87L20	TUBE, WATER (L)	1	
6	17562-87L01	BUSH, WATER TUBE UPPER	1	
7	17563-87D01	BUSH, WATER TUBE LOWER	1	
8	17564-87D00	BUSH, WATER PUMP CASE	1	
9	17631-87L00	FILTER, WATER PORT SIDE	1	
10	17632-87L01	FILTER, WATER STBD SIDE	1	
11	29116-93J10	BOLT	4	
12	09161-16008	WASHER (15.8X26X1)	2	
13	09202-06031	PIN (6X12)	2	
14	09420-04009	KEY	1	
15	09132-04034	SCREW (4X18)	1	
16	17413-99E11	SLEEVE, WATER PUMP CASE	1	
17	17416-99E11	SEALING, WATER PUMP CASE NO.1	1	
18	17400-87L04	WATER PUMP REPAIR KIT	1	OPT

DF90ATH E01

DF90A_E01_020_160E
WATER PUMP

FIG.160F

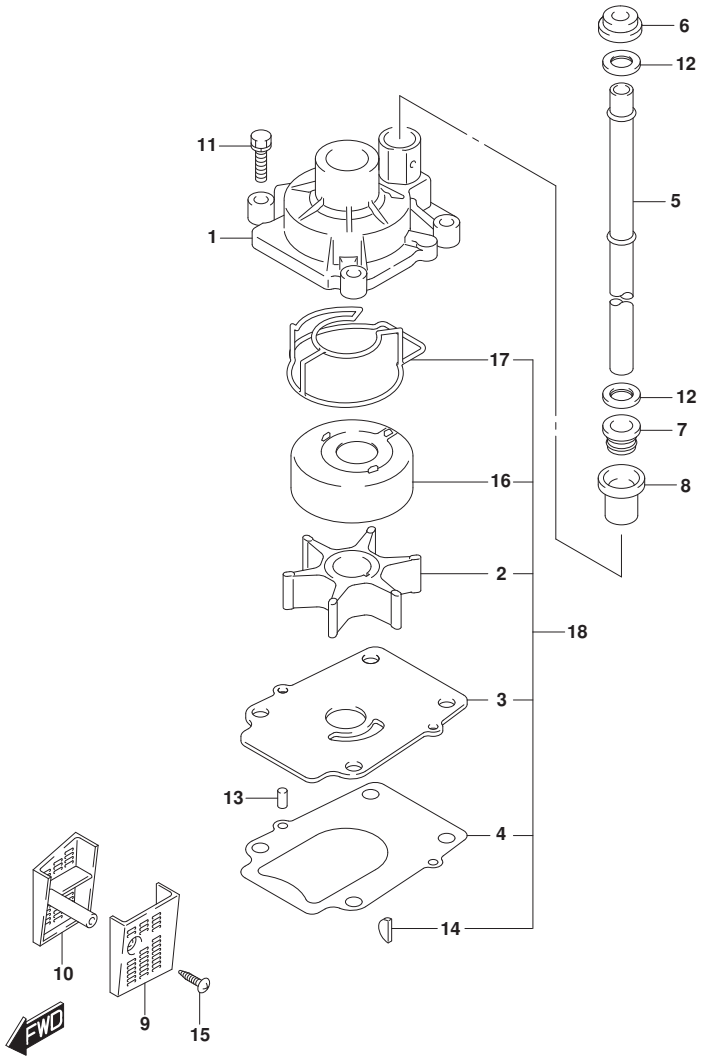

FIG.160F (1-D-5) WATER PUMP (DF70A E40)(DF70ATH E40)

REF NO.	PART NO.	DESCRIPTION	Q'TY	REMARKS
1	17410-99E10	CASE, WATER PUMP	1	
2	17461-87E12	IMPELLER, WATER PUMP	1	
3	17471-87L11	PANEL, PUMP CASE UNDER	1	
4	17472-87L00	GASKET, PUMP CASE PANEL	1	
5-1	17561-87L20	TUBE, WATER (L)	1	W/TRANSOM(L)
5-2	17561-87L30	TUBE, WATER (X)	1	W/TRANSOM(X)
6	17562-87L01	BUSH, WATER TUBE UPPER	1	
7	17563-87D01	BUSH, WATER TUBE LOWER	1	
8	17564-87D00	BUSH, WATER PUMP CASE	1	
9	17631-87L00	FILTER, WATER PORT SIDE	1	
10	17632-87L01	FILTER, WATER STBD SIDE	1	
11	29116-93J10	BOLT	4	
12	09161-16008	WASHER (15.8X26X1)	2	
13	09202-06031	PIN (6X12)	2	
14	09420-04009	KEY	1	
15	09132-04034	SCREW (4X18)	1	
16	17413-99E21	SLEEVE, WATER PUMP CASE	1	
17	17416-99E11	SEALING, WATER PUMP CASE NO.1	1	
18	17400-87L12	WATER PUMP REPAIR KIT	1	OPT

DF70A E40
DF70ATH E40

DF90A_E01_020_160F
WATER PUMP

FIG.160G

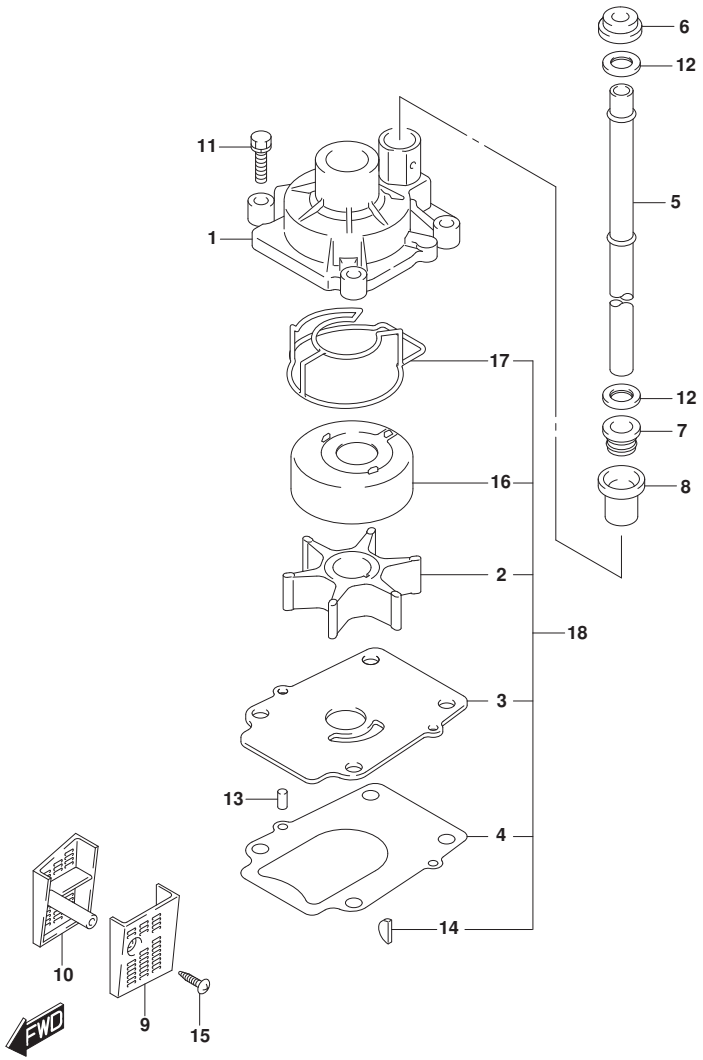

FIG.160G (1-D-6) WATER PUMP (DF80A E40)

REF NO.	PART NO.	DESCRIPTION	Q'TY	REMARKS
1	17410-99E10	CASE, WATER PUMP	1	
2	17461-87E12	IMPELLER, WATER PUMP	1	
3	17471-87L11	PANEL, PUMP CASE UNDER	1	
4	17472-87L00	GASKET, PUMP CASE PANEL	1	
5-1	17561-87L20	TUBE, WATER (L)	1	W/TRANSOM(L)
5-2	17561-87L30	TUBE, WATER (X)	1	W/TRANSOM(X)
6	17562-87L01	BUSH, WATER TUBE UPPER	1	
7	17563-87D01	BUSH, WATER TUBE LOWER	1	
8	17564-87D00	BUSH, WATER PUMP CASE	1	
9	17631-87L00	FILTER, WATER PORT SIDE	1	
10	17632-87L01	FILTER, WATER STBD SIDE	1	
11	29116-93J10	BOLT	4	
12	09161-16008	WASHER (15.8X26X1)	2	
13	09202-06031	PIN (6X12)	2	
14	09420-04009	KEY	1	
15	09132-04034	SCREW (4X18)	1	
16	17413-99E21	SLEEVE, WATER PUMP CASE	1	
17	17416-99E11	SEALING, WATER PUMP CASE NO.1	1	
18	17400-87L12	WATER PUMP REPAIR KIT	1	OPT

DF80A E40

DF90A_E01_020_160G
WATER PUMP

FIG.160H

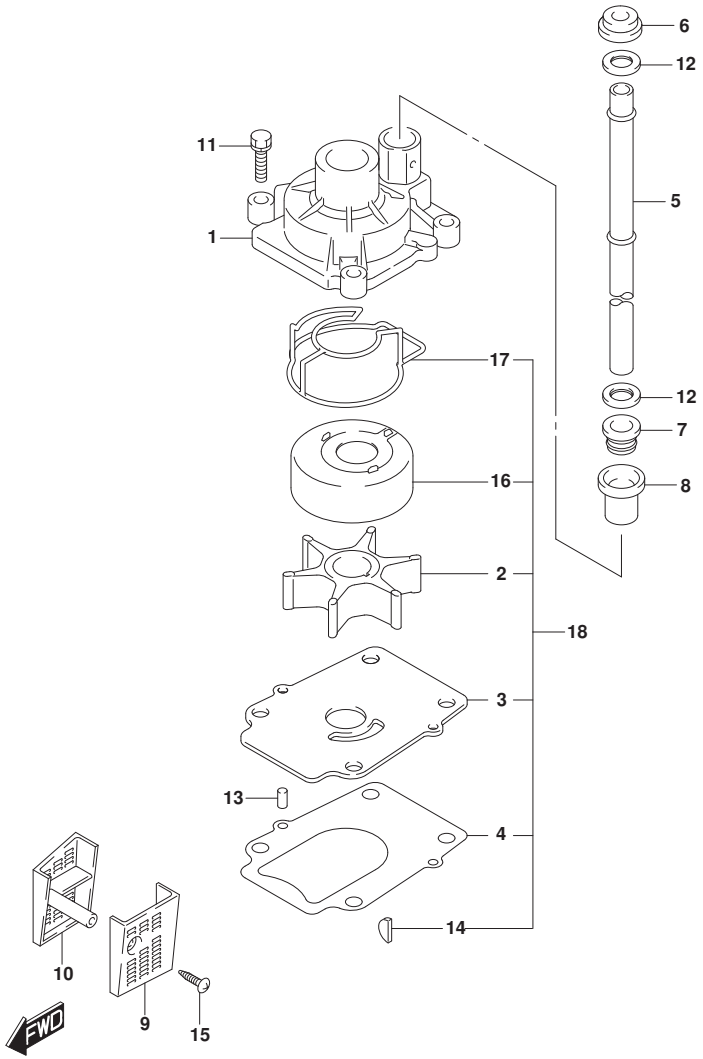

FIG.160H (1-D-7) WATER PUMP (DF90A E40)(DF90ATH E40)(DF90AWQH E40)

REF NO.	PART NO.	DESCRIPTION	Q'TY	REMARKS
1	17410-99E10	CASE, WATER PUMP	1	
2	17461-87E12	IMPELLER, WATER PUMP	1	
3	17471-87L11	PANEL, PUMP CASE UNDER	1	
4	17472-87L00	GASKET, PUMP CASE PANEL	1	
5-1	17561-87L20	TUBE, WATER (L)	1	W/TRANSOM(L)
5-2	17561-87L30	TUBE, WATER (X)	1	W/TRANSOM(X)
6	17562-87L01	BUSH, WATER TUBE UPPER	1	
7	17563-87D01	BUSH, WATER TUBE LOWER	1	
8	17564-87D00	BUSH, WATER PUMP CASE	1	
9	17631-87L00	FILTER, WATER PORT SIDE	1	
10	17632-87L01	FILTER, WATER STBD SIDE	1	
11	29116-93J10	BOLT	4	
12	09161-16008	WASHER (15.8X26X1)	2	
13	09202-06031	PIN (6X12)	2	
14	09420-04009	KEY	1	
15	09132-04034	SCREW (4X18)	1	
16	17413-99E21	SLEEVE, WATER PUMP CASE	1	
17	17416-99E11	SEALING, WATER PUMP CASE NO.1	1	
18	17400-87L12	WATER PUMP REPAIR KIT	1	OPT

DF90A E40
DF90ATH E40
DF90AWQH E40

DF90A_E01_020_160H
WATER PUMP

FIG.160J

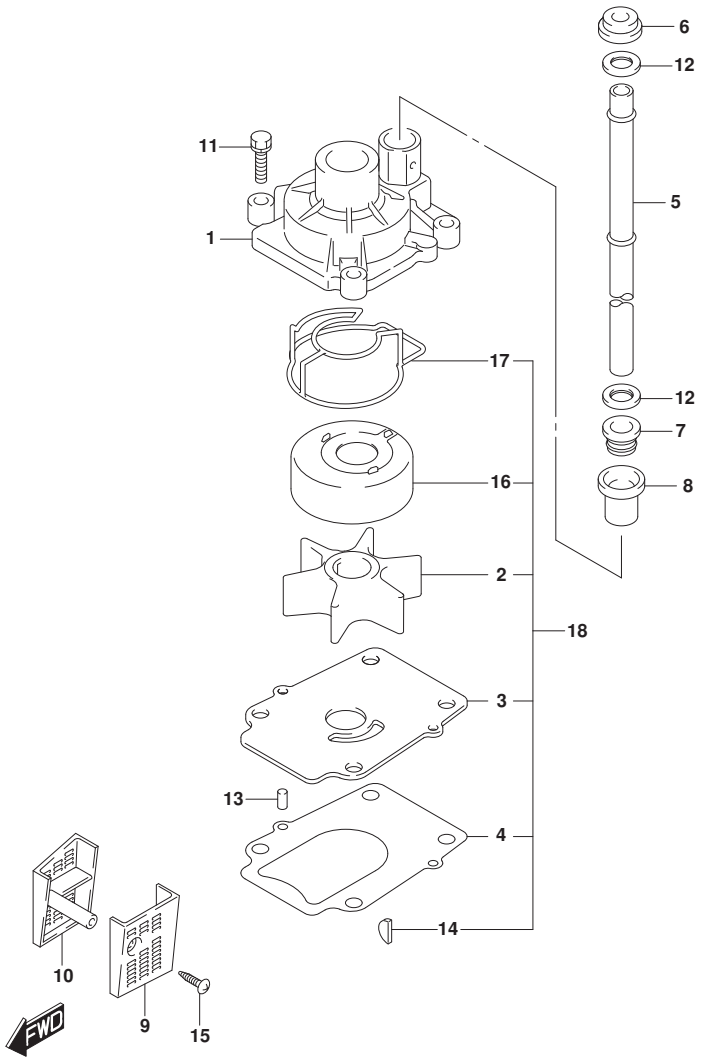

FIG.160J (1-D-8) WATER PUMP (DF100B E01)

REF NO.	PART NO.	DESCRIPTION	Q'TY	REMARKS
1	17410-99E10	CASE, WATER PUMP	1	
2	17461-87L00	IMPELLER, WATER PUMP	1	
3	17471-87L01	PANEL, PUMP CASE UNDER	1	
4	17472-87L00	GASKET, PUMP CASE PANEL	1	
5-1	17561-87L20	TUBE, WATER (L)	1	W/TRANSOM(L)
5-2	17561-87L30	TUBE, WATER (X)	1	W/TRANSOM(X)
6	17562-87L01	BUSH, WATER TUBE UPPER	1	
7	17563-87D01	BUSH, WATER TUBE LOWER	1	
8	17564-87D00	BUSH, WATER PUMP CASE	1	
9	17631-87L00	FILTER, WATER PORT SIDE	1	
10	17632-87L01	FILTER, WATER STBD SIDE	1	
11	29116-93J10	BOLT	4	
12	09161-16008	WASHER (15.8X26X1)	2	
13	09202-06031	PIN (6X12)	2	
14	09420-04009	KEY	1	
15	09132-04034	SCREW (4X18)	1	
16	17413-99E11	SLEEVE, WATER PUMP CASE	1	
17	17416-99E11	SEALING, WATER PUMP CASE NO.1	1	
18	17400-87L04	WATER PUMP REPAIR KIT	1	OPT

DF100B E01

DF90A_E01_020_160J
WATER PUMP

FIG.160K

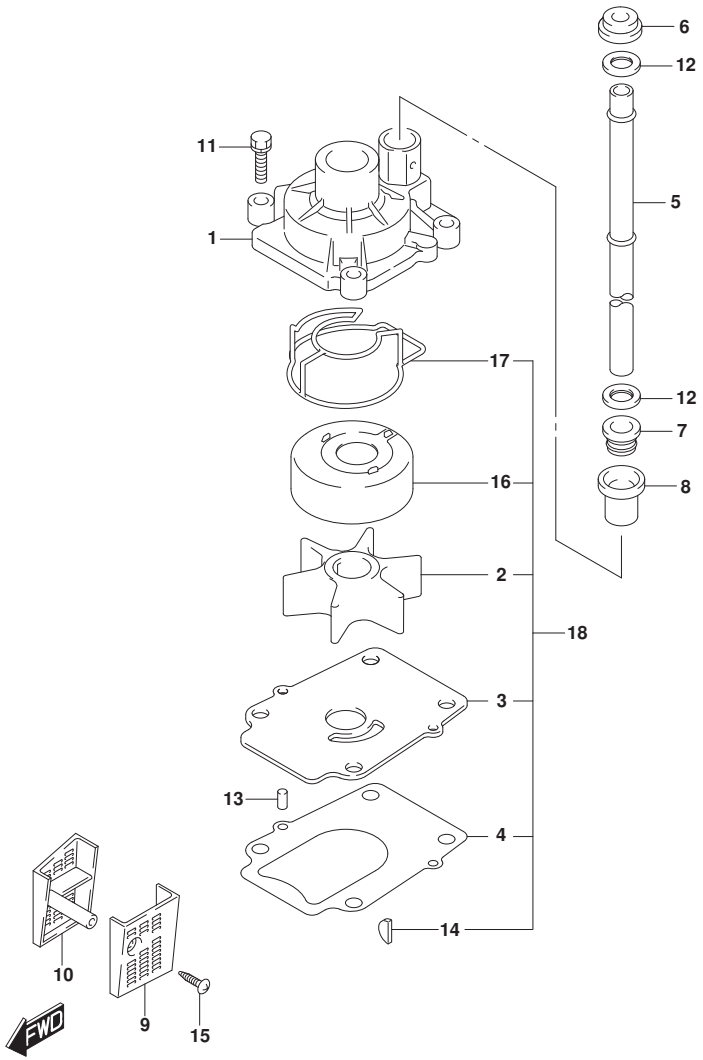

FIG.160K (1-D-9) WATER PUMP (DF100B E40)

REF NO.	PART NO.	DESCRIPTION	Q'TY	REMARKS
1	17410-99E10	CASE, WATER PUMP	1	
2	17461-87L00	IMPELLER, WATER PUMP	1	
3	17471-87L11	PANEL, PUMP CASE UNDER	1	
4	17472-87L00	GASKET, PUMP CASE PANEL	1	
5-1	17561-87L20	TUBE, WATER (L)	1	W/TRANSOM(L)
5-2	17561-87L30	TUBE, WATER (X)	1	W/TRANSOM(X)
6	17562-87L01	BUSH, WATER TUBE UPPER	1	
7	17563-87D01	BUSH, WATER TUBE LOWER	1	
8	17564-87D00	BUSH, WATER PUMP CASE	1	
9	17631-87L00	FILTER, WATER PORT SIDE	1	
10	17632-87L01	FILTER, WATER STBD SIDE	1	
11	29116-93J10	BOLT	4	
12	09161-16008	WASHER (15.8X26X1)	2	
13	09202-06031	PIN (6X12)	2	
14	09420-04009	KEY	1	
15	09132-04034	SCREW (4X18)	1	
16	17413-99E21	SLEEVE, WATER PUMP CASE	1	
17	17416-99E11	SEALING, WATER PUMP CASE NO.1	1	
18	17400-87L12	WATER PUMP REPAIR KIT	1	OPT

DF100B E40

DF90A_E01_020_160K
WATER PUMP

FIG.162A

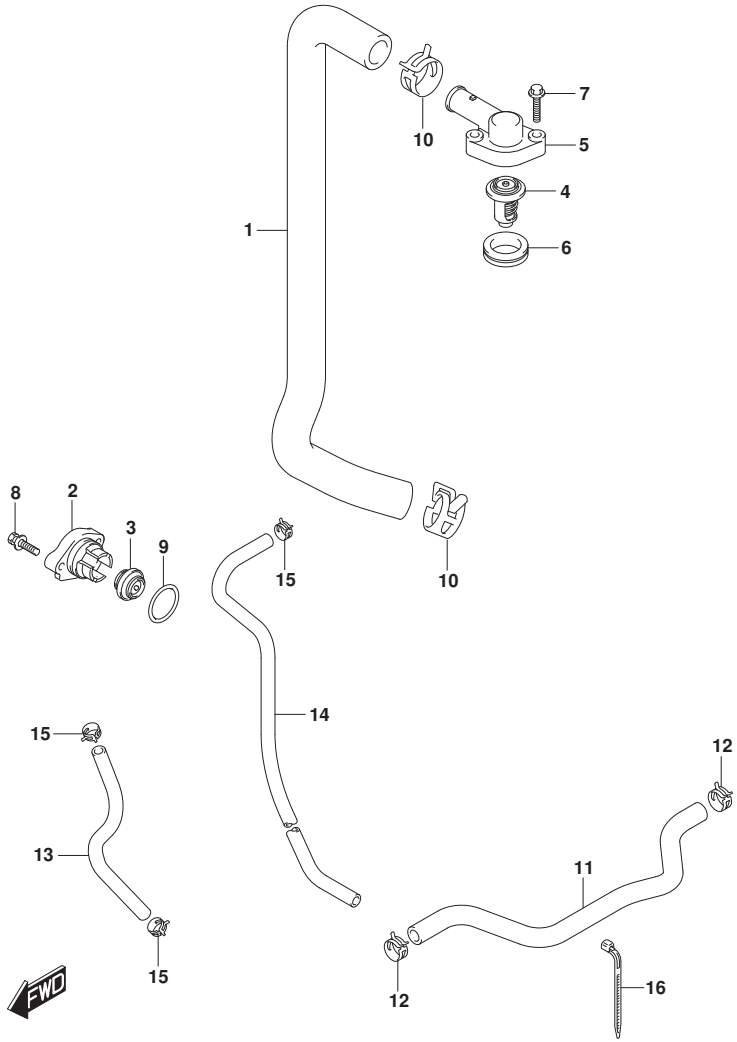

FIG.162A (1-D-10) THERMOSTAT (DF70A)(DF90A)(DF100B)

REF NO.	PART NO.	DESCRIPTION	Q'TY	REMARKS
1	11196-87L00	HOSE, WATER RETURN	1	
2	17611-90J00	COVER, WATER PRESS VALVE	1	
3	17660-99E01	VALVE, WATER PRESSURE	1	
4-1	17670-90J01	THERMOSTAT (60sC)	1	
4-2	17670-90J11	THERMOSTAT (71sC)	1	OPT
5	17681-87L00	COVER, THERMOSTAT	1	
6	17685-87L01	SEAL, THERMOSTAT COVER	1	
7	01550-0630C	BOLT	2	
8	09116-06121	BOLT (6X25)	2	
9	09280-26006	O RING (D:3.1,ID:26.4)	1	
10	09401-26408	CLIP	2	
11	17915-87L00	HOSE, WATER FLUSH	1	
12	09401-15414	CLIP	2	
13	09352-50006-600	HOSE (5X9X600)	1	L:600->320 UNION TO COOLER
14	09352-50006-600	HOSE (5X9X600)	1	L:600->190 E/H TO SEPARATOR
15	09401-08413	CLIP	3	
16	09407-11401	CLAMP (L:95)	1	

DF70A E01
DF70A E40
DF90A E01
DF90A E40
DF100B E01
DF100B E40

DF90A_E01_020_162A
THERMOSTAT

FIG.162B

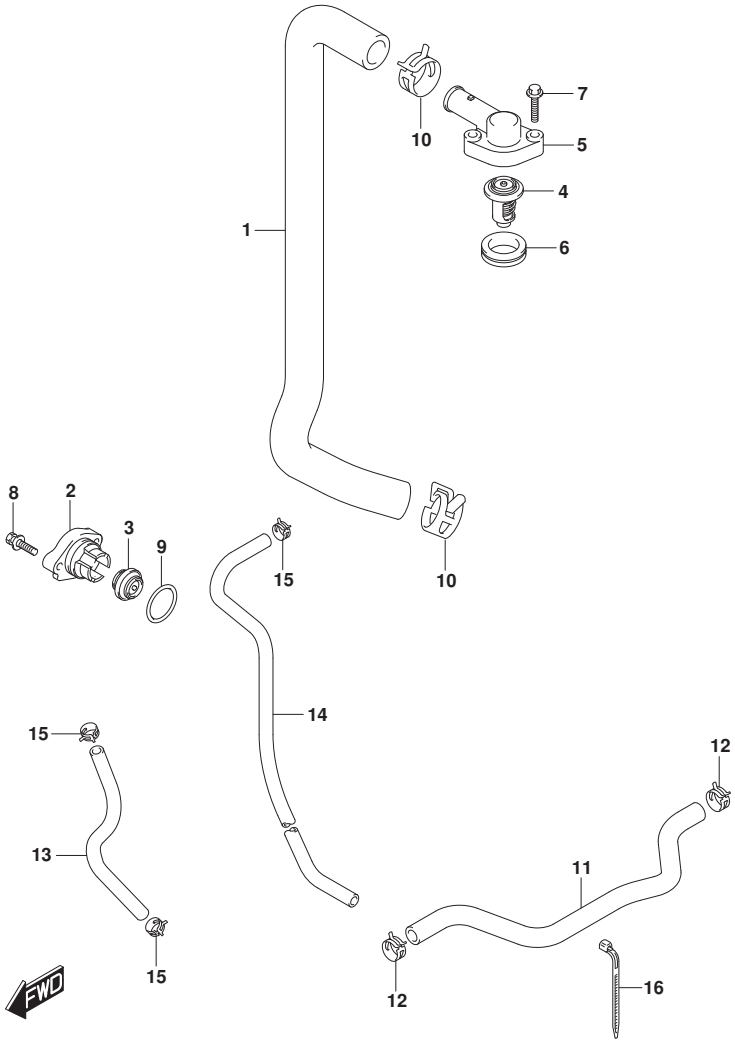

FIG.162B (1-D-11) THERMOSTAT (DF70ATH)(DF80A)(DF90ATH)(DF90AWQH)

REF NO.	PART NO.	DESCRIPTION	Q'TY	REMARKS
1	11196-87L00	HOSE, WATER RETURN	1	
2	17611-90J00	COVER, WATER PRESS VALVE	1	
3	17660-99E01	VALVE, WATER PRESSURE	1	
4-1	17670-90J01	THERMOSTAT (60sC)	1	
4-2	17670-90J11	THERMOSTAT (71sC)	1	OPT
5	17681-87L00	COVER, THERMOSTAT	1	
6	17685-87L01	SEAL, THERMOSTAT COVER	1	
7	01550-0630C	BOLT	2	
8	09116-06121	BOLT (6X25)	2	
9	09280-26006	O RING (D:3.1,ID:26.4)	1	
10	09401-26408	CLIP	2	
11	17915-87L00	HOSE, WATER FLUSH	1	
12	09401-15414	CLIP	2	
13	09352-50006-600	HOSE (5X9X600)	1	L:600->320 UNION TO COOLER
14	09352-50006-600	HOSE (5X9X600)	1	L:600->190 E/H TO SEPARATOR
15	09401-08413	CLIP	3	
16	09407-11401	CLAMP (L:95)	1	

DF70ATH E01
DF70ATH E40
DF80A E01
DF80A E40
DF90ATH E01
DF90ATH E40
DF90AWQH E40

DF90A_E01_020_162B
THERMOSTAT

FIG.163A

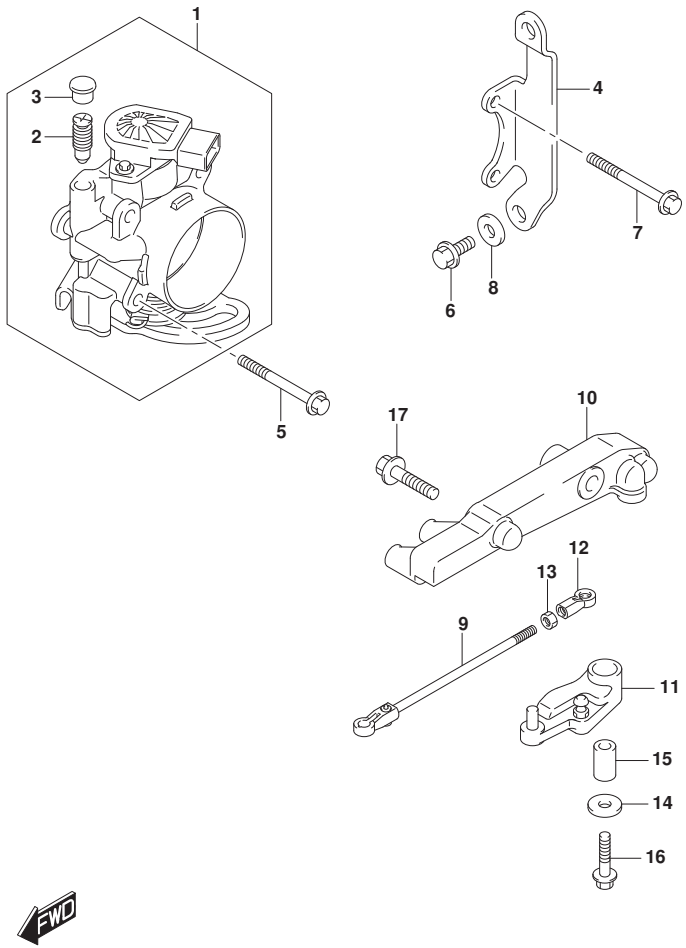

FIG.163A (1-D-12) THROTTLE BODY (DF70A)(DF80A)(DF90A)(DF100B)

REF NO.	PART NO.	DESCRIPTION	Q'TY	REMARKS
1	13300-87L11	BODY ASSY, THROTTLE	1	
2	13353-99E00	.ADJUSTER ASSY	1	
3	13354-99E00	.CAP	1	
4	13315-87L00	BRACKET, THROTTLE BODY	1	
5	01550-0650C	BOLT	2	
6	01550-0616C	BOLT	3	
7	01550-0655C	BOLT	2	
8	09160-06084	WASHER (6.5X18X1.6)	1	
9	13510-87L00	ROD, THROTTLE NO.1	1	
10	19115-87L00	HOLDER, THROTTLE LEVER	1	
11	19120-87L00	LEVER, THROTTLE	1	
12	19131-95502	CONNECTOR, THROTTLE ROD	1	
13	09140-05005	NUT	1	
14	09160-06046	WASHER (6.5X20X1.5)	1	
15	09180-06186	SPACER (6.2X12.6X21)	1	
16	01550-06357	BOLT	1	
17	01550-0830C	BOLT	2	

DF70A E01
DF70A E40
DF80A E01
DF80A E40
DF90A E01
DF90A E40
DF100B E01
DF100B E40

FIG.163B

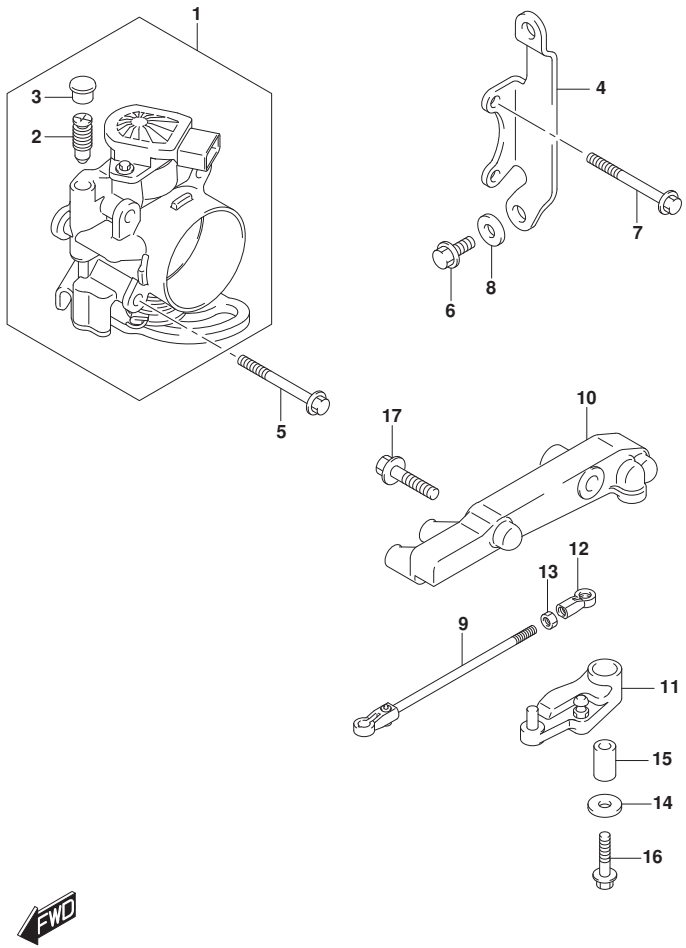

FIG.163B (1-D-13) THROTTLE BODY (DF70ATH)(DF90ATH)(DF90AWQH)

REF NO.	PART NO.	DESCRIPTION	Q'TY	REMARKS
1	13300-87L11	BODY ASSY, THROTTLE	1	
2	13353-99E00	.ADJUSTER ASSY	1	
3	13354-99E00	.CAP	1	
4	13315-87L00	BRACKET, THROTTLE BODY	1	
5	01550-0650C	BOLT	2	
6	01550-0616C	BOLT	3	
7	01550-0655C	BOLT	2	
8	09160-06084	WASHER (6.5X18X1.6)	1	
9	13510-87L00	ROD, THROTTLE NO.1	1	
10	19115-87L00	HOLDER, THROTTLE LEVER	1	
11	19120-87L10	LEVER, THROTTLE	1	
12	19131-95502	CONNECTOR, THROTTLE ROD	1	
13	09140-05005	NUT	1	
14	09160-06046	WASHER (6.5X20X1.5)	1	
15	09180-06186	SPACER (6.2X12.6X21)	1	
16	01550-06357	BOLT	1	
17	01550-0830C	BOLT	2	

DF70ATH E01
DF70ATH E40
DF90ATH E01
DF90ATH E40
DF90AWQH E40

FIG.175A

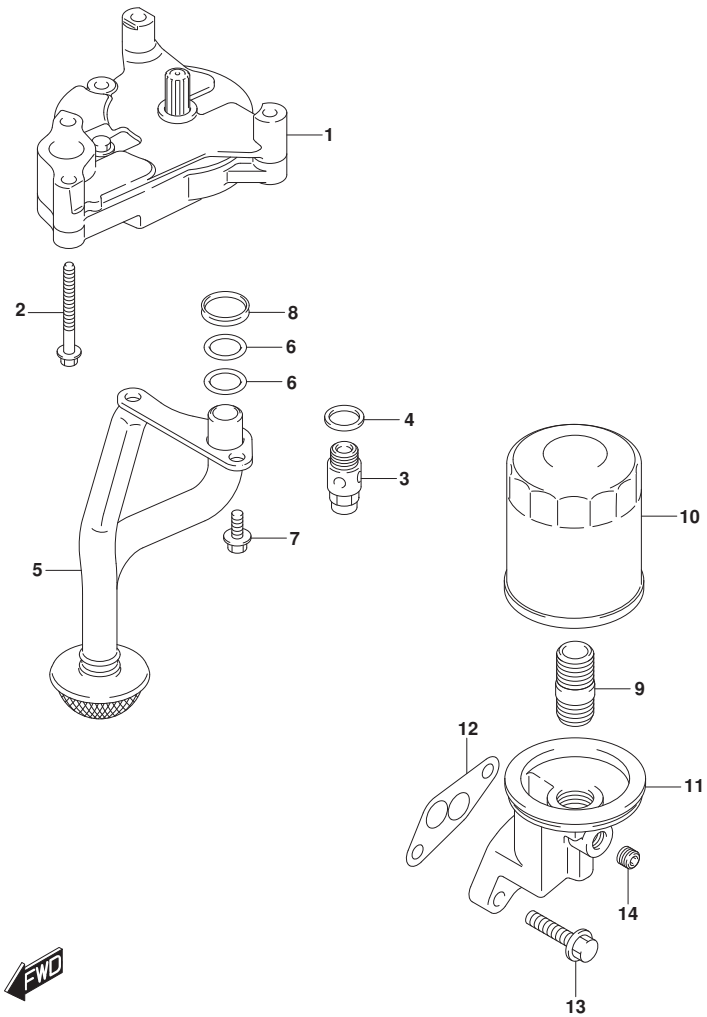

FIG.175A (1-D-14) OIL PUMP

REF NO.	PART NO.	DESCRIPTION	Q'TY	REMARKS
1	16400-87L00	PUMP ASSY, OIL	1	
2	09103-06220	BOLT (6X60)	4	
3	16440-99E00	VALVE ASSY, OIL RELIEF	1	
4	09168-16002	GASKET (16X22X2)	1	
5	16520-87L00	STRAINER, OIL PUMP	1	
6	09280-17002	O RING (D:2.4,ID:16.8)	2	
7	01550-0616A	BOLT	2	
8	16519-87L00	SEAL, ENGINE HOLDER	1	
9	11241-73003	STAND, OIL FILTER	1	
10	16510-61A31	FILTER ASSY, OIL	1	
11	16531-87L00	CASE, OIL FILTER ADAPTER	1	
12	16539-87L00	GASKET, ADAPTER CASE	1	
13	01550-08307	BOLT	2	
14	09246-04009	PLUG (1/8PT,H:8)	1	

DF90A_E01_020_175A
OIL PUMP

FIG.180A

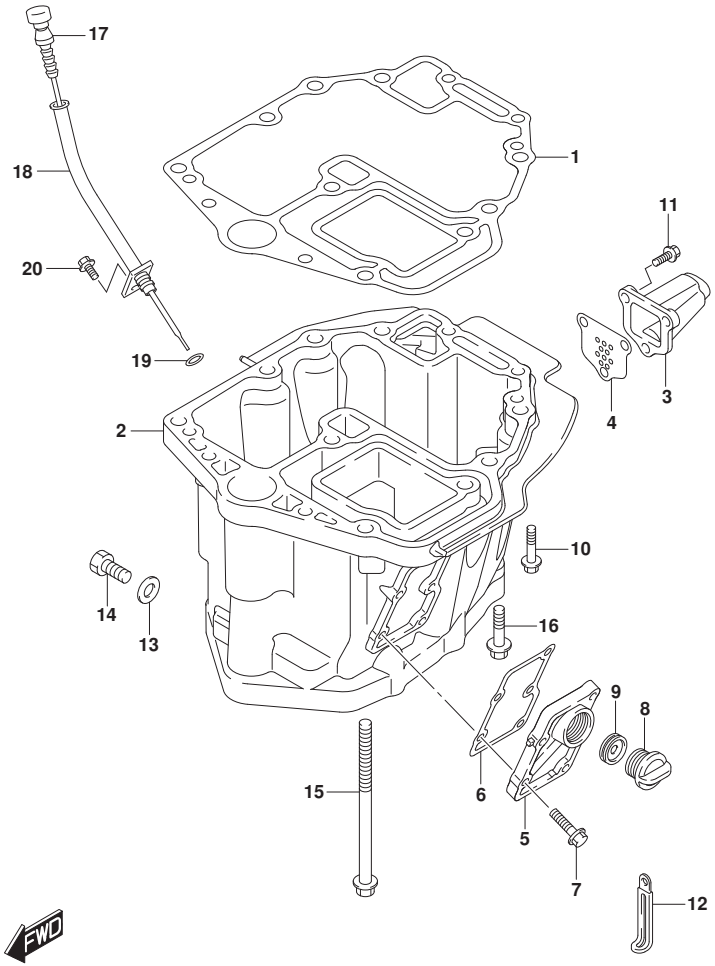

FIG.180A (1-D-15) OIL PAN (DF70A)(DF90A)(DF100B)

REF NO.	PART NO.	DESCRIPTION	Q'TY	REMARKS
1	11489-87L00	GASKET, OIL PAN	1	
2-1	11501-87L10-YAY	PAN, OIL (BLACK)	1	
2-2	11501-87L10-Y5S	PAN, OIL (WHITE)	1	
3-1	11541-87L00-YAY	PIPE, EXHAUST (BLACK)	1	
3-2	11541-87L00-Y5S	PIPE, EXHAUST (WHITE)	1	
4	11542-87L00	GASKET, EXHAUST TUBE	1	
5-1	11551-87L00-YAY	COVER, WATER JACKET OIL PAN (BLACK)	1	
5-2	11551-87L00-Y5S	COVER, WATER JACKET OIL PAN (WHITE)	1	
6	11552-87L00	GASKET, OIL PAN WTR JKT COV	1	
7	09116-06121	BOLT (6X25)	5	
8	17913-93J00	PLUG, WATER	1	
9	17914-93J01	GASKET, WATER PLUG	1	
10	09116-08128	BOLT (8X40)	4	
11	29116-93J00	BOLT, EXHAUST PIPE	3	
12	29404-93J01	CLAMP, SPEEDOMETER HOSE	1	
13	09168-12012	GASKET (12.5X20X2.5)	1	
14	09248-12009	PLUG (12X18.65)	1	
15	09116-10129	BOLT (10X160)	6	
16	09116-10181	BOLT (10X44)	2	
17	16910-87L00	GAUGE, OIL LEVEL	1	
18	16930-87L00	GUIDE, OIL LEVEL GAUGE	1	
19	09280-09008	O RING (D:2.1,ID:8.8)	1	
20	01550-0612C	BOLT	1	

DF70A E01
DF70A E40
DF90A E01
DF90A E40
DF100B E01
DF100B E40

FIG.180B

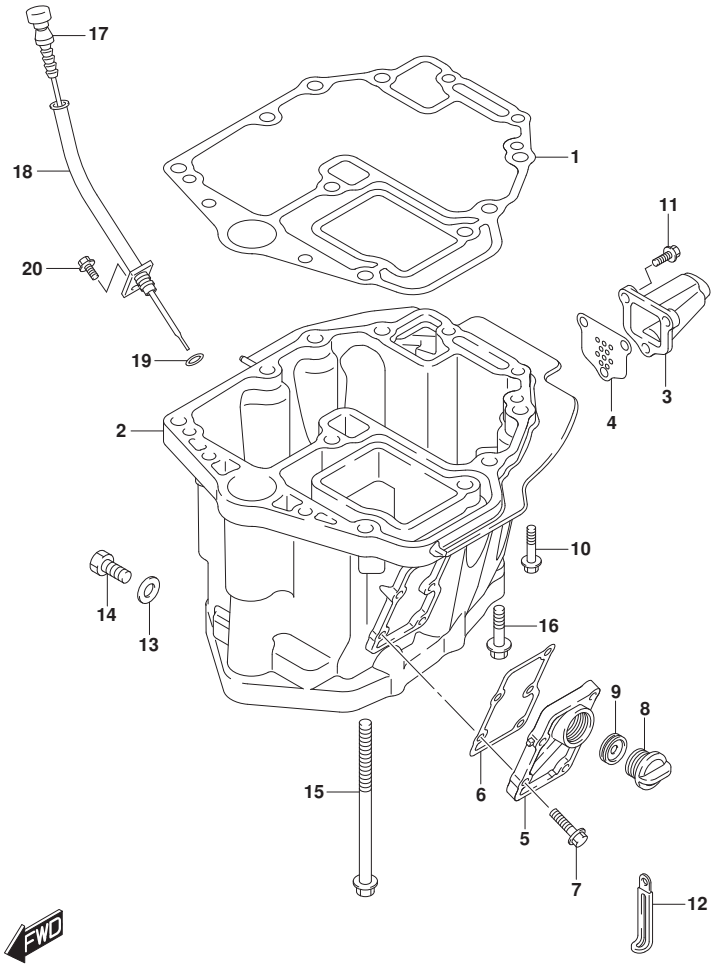

FIG.180B (1-E-2) OIL PAN (DF70ATH)(DF80A)(DF90ATH)(DF90AWQH)

REF NO.	PART NO.	DESCRIPTION	Q'TY	REMARKS
1	11489-87L00	GASKET, OIL PAN	1	
2	11501-87L10-YAY	PAN, OIL (BLACK)	1	
3	11541-87L00-YAY	PIPE, EXHAUST (BLACK)	1	
4	11542-87L00	GASKET, EXHAUST TUBE	1	
5	11551-87L00-YAY	COVER, WATER JACKET OIL PAN (BLACK)	1	
6	11552-87L00	GASKET, OIL PAN WTR JKT COV	1	
7	09116-06121	BOLT (6X25)	5	
8	17913-93J00	PLUG, WATER	1	
9	17914-93J01	GASKET, WATER PLUG	1	
10	09116-08128	BOLT (8X40)	4	
11	29116-93J00	BOLT, EXHAUST PIPE	3	
12	29404-93J01	CLAMP, SPEEDOMETER HOSE	1	
13	09168-12012	GASKET (12.5X20X2.5)	1	
14	09248-12009	PLUG (12X18.65)	1	
15	09116-10129	BOLT (10X160)	6	
16	09116-10181	BOLT (10X44)	2	
17	16910-87L00	GAUGE, OIL LEVEL	1	
18	16930-87L00	GUIDE, OIL LEVEL GAUGE	1	
19	09280-09008	O RING (D:2.1,ID:8.8)	1	
20	01550-0612C	BOLT	1	

DF70ATH E01
DF70ATH E40
DF80A E01
DF80A E40
DF90ATH E01
DF90ATH E40
DF90AWQH E40

FIG.204A

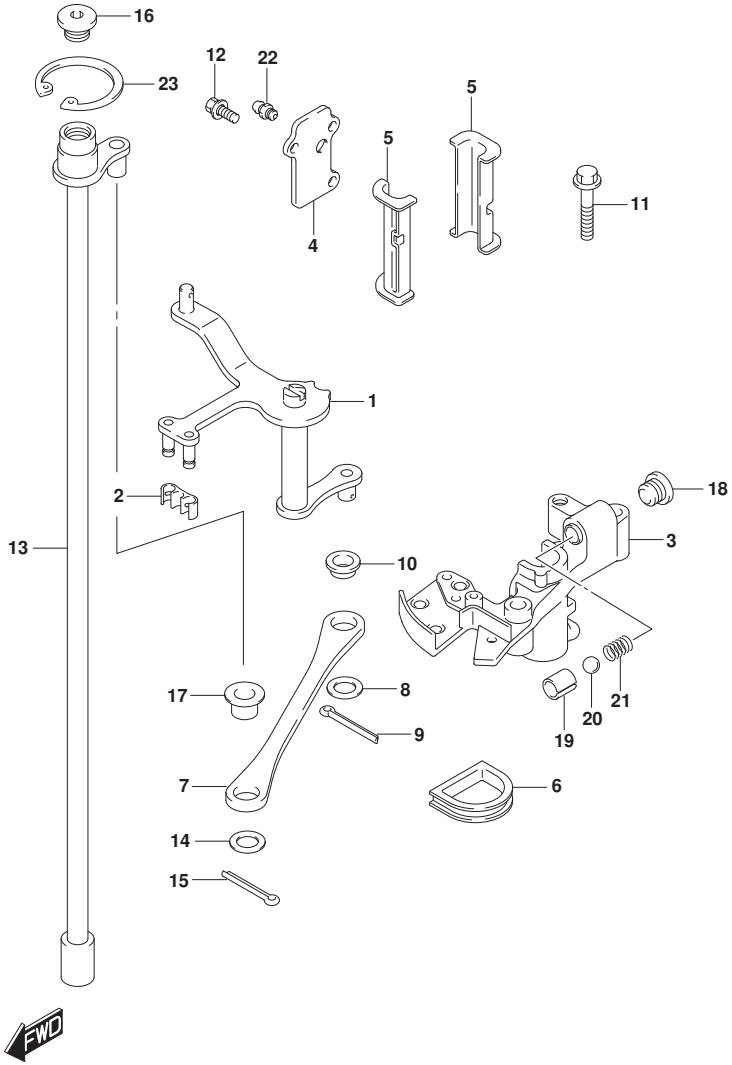

FIG.204A (1-E-3) CLUTCH SHAFT (DF70A)(DF70ATH)(DF80A)(DF90A)(DF90ATH)

REF NO.	PART NO.	DESCRIPTION	Q'TY	REMARKS
1	21110-87L10	LEVER, CLUTCH	1	
2	21131-93J00	BUSH, CLUTCH LEVER	1	
3	21151-87L00	HOLDER, CLUTCH LEVER	1	
4	21152-87L00	PLATE, CLUTCH HOLDER	1	
5	21153-87L00	BUSH, CLUTCH LEVER	2	
6	21157-87L00	SEAL, CLUTCH HOLDER	1	
7	23115-87L00	LINK, CLUTCH LEVER	1	
8	09160-09019	WASHER (9.2X16X1)	1	
9	09204-01006	PIN	1	
10	09307-09002	BUSH	1	
11	01550-0640C	BOLT	2	
12	09116-05010	BOLT (5X12)	3	
13	21210-87L01	SHAFT, CLUTCH	1	
14	09160-09019	WASHER (9.2X16X1)	1	
15	09204-01006	PIN	1	
16	09248-12011	PLUG (12X9)	1	
17	09307-09002	BUSH	1	
18	11118-95J00	PLUG, NOTCH SPRING	1	
19	09205-10008	SPRING PIN (10.2X13)	1	
20	09260-10005	BALL	1	
21	09440-07071	SPRING	1	
22	22511-99011	NIPPLE, GREASE	1	
23	08331-41359	CIRCLIP	1	

DF70A E01
DF70A E40
DF70ATH E01
DF70ATH E40
DF80A E01
DF80A E40
DF90A E01

DF90A_E01_020_204A
CLUTCH SHAFT

FIG.204B

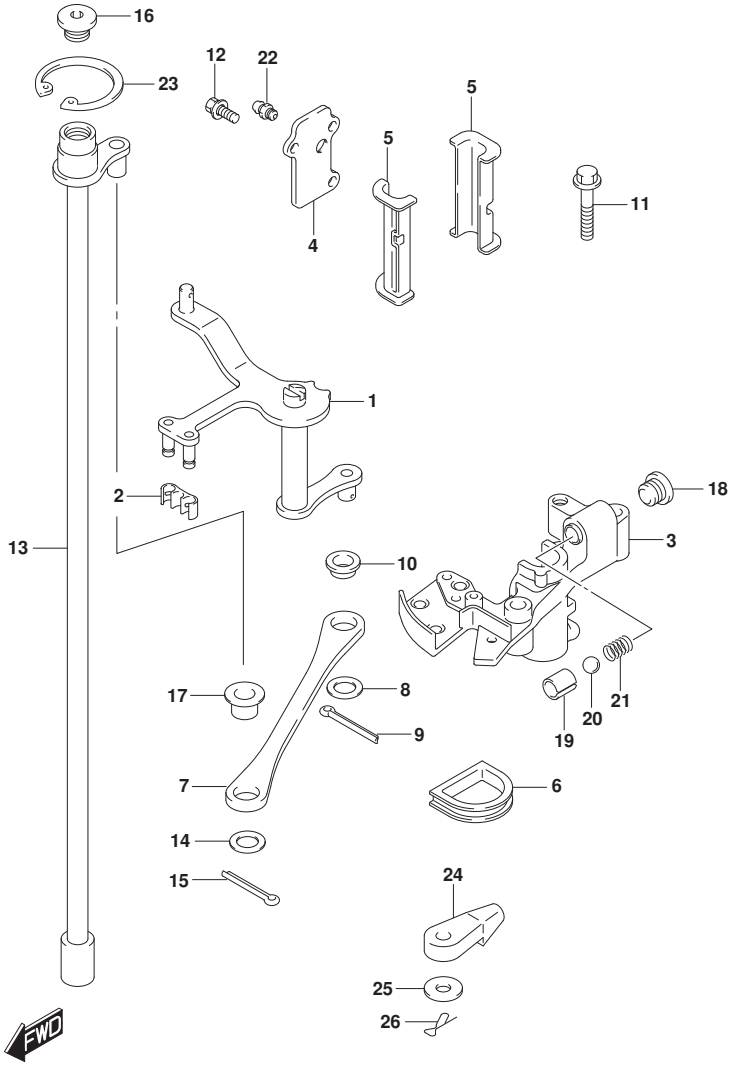

FIG.204B (1-E-4) CLUTCH SHAFT (DF90AWQH)

REF NO.	PART NO.	DESCRIPTION	Q'TY	REMARKS
1	21110-87L10	LEVER, CLUTCH	1	
2	21131-93J00	BUSH, CLUTCH LEVER	1	
3	21151-87L00	HOLDER, CLUTCH LEVER	1	
4	21152-87L00	PLATE, CLUTCH HOLDER	1	
5	21153-87L00	BUSH, CLUTCH LEVER	2	
6	21157-87L00	SEAL, CLUTCH HOLDER	1	
7	23115-87L00	LINK, CLUTCH LEVER	1	
8	09160-09019	WASHER (9.2X16X1)	1	
9	09204-01006	PIN	1	
10	09307-09002	BUSH	1	
11	01550-0640C	BOLT	2	
12	09116-05010	BOLT (5X12)	3	
13	21210-87L01	SHAFT, CLUTCH	1	
14	09160-09019	WASHER (9.2X16X1)	1	
15	09204-01006	PIN	1	
16	09248-12011	PLUG (12X9)	1	
17	09307-09002	BUSH	1	
18	11118-95J00	PLUG, NOTCH SPRING	1	
19	09205-10008	SPRING PIN (10.2X13)	1	
20	09260-10005	BALL	1	
21	09440-07071	SPRING	1	
22	22511-99011	NIPPLE, GREASE	1	
23	08331-41359	CIRCLIP	1	
24	67467-89J01	CONNECTOR	2	
25	09160-06055	WASHER(7X12X1)	2	
26	09385-06012	CLIP	2	

DF90AWQH E40

DF90A_E01_020_204B
CLUTCH SHAFT

FIG.204C

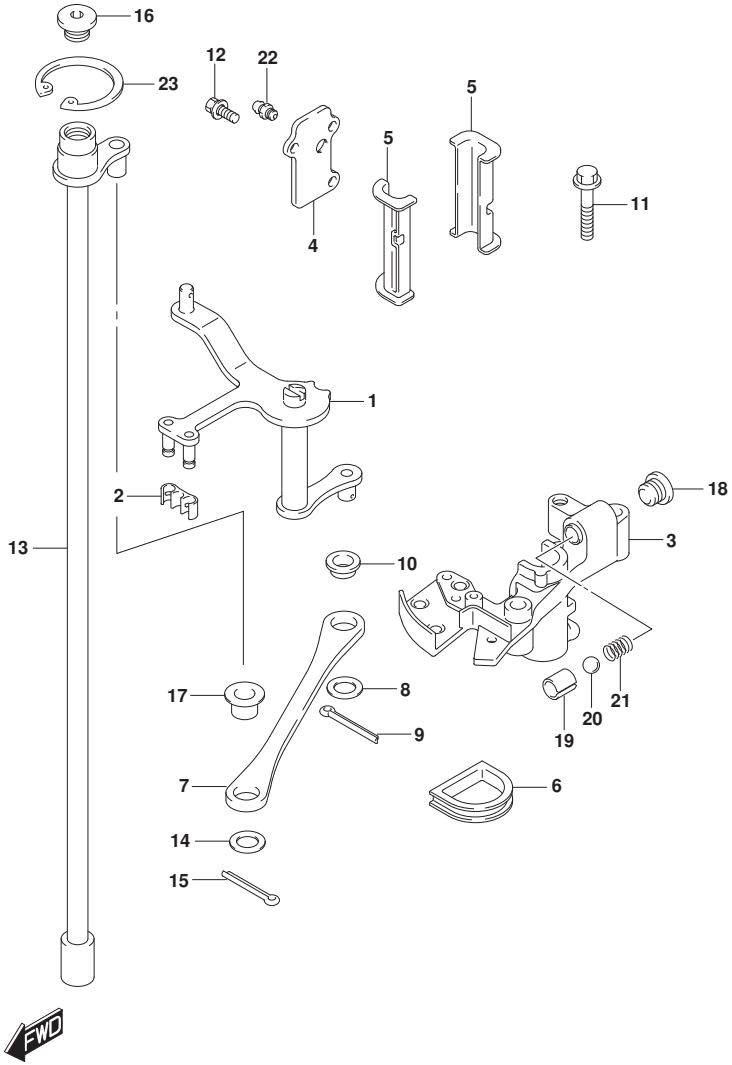

FIG.204C (1-E-5) CLUTCH SHAFT (DF100B)

REF NO.	PART NO.	DESCRIPTION	Q'TY	REMARKS
1	21110-87L10	LEVER, CLUTCH	1	
2	21131-93J00	BUSH, CLUTCH LEVER	1	
3	21151-87L00	HOLDER, CLUTCH LEVER	1	
4	21152-87L00	PLATE, CLUTCH HOLDER	1	
5	21153-87L00	BUSH, CLUTCH LEVER	2	
6	21157-87L00	SEAL, CLUTCH HOLDER	1	
7	23115-87L00	LINK, CLUTCH LEVER	1	
8	09160-09019	WASHER (9.2X16X1)	1	
9	09204-01006	PIN	1	
10	09307-09002	BUSH	1	
11	01550-0640C	BOLT	2	
12	09116-05010	BOLT (5X12)	3	
13	21210-87L01	SHAFT, CLUTCH	1	
14	09160-09019	WASHER (9.2X16X1)	1	
15	09204-01006	PIN	1	
16	09248-12011	PLUG (12X9)	1	
17	09307-09002	BUSH	1	
18	11118-95J00	PLUG, NOTCH SPRING	1	
19	09205-10008	SPRING PIN (10.2X13)	1	
20	09260-10005	BALL	1	
21	09440-07071	SPRING	1	
22	22511-99011	NIPPLE, GREASE	1	
23	08331-41359	CIRCLIP	1	

DF100B E01
DF100B E40

DF90A_E01_020_204C
CLUTCH SHAFT

FIG.206A

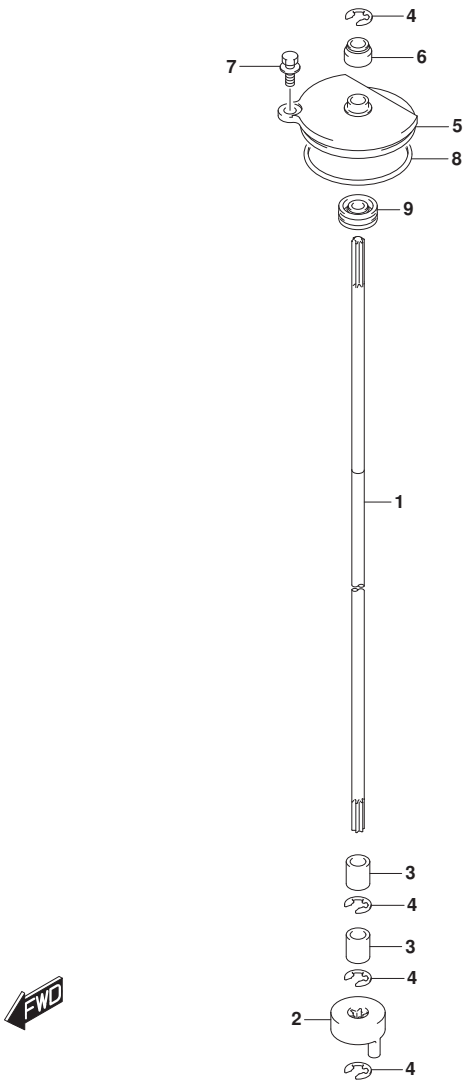

FIG.206A (1-E-6) CLUTCH ROD (DF70A)(DF80A)(DF90A)(DF100B)

REF NO.	PART NO.	DESCRIPTION	Q'TY	REMARKS
1-1	25111-87L01	ROD, SHIFT (L)	1	W/TRANSOM(L)
1-2	25111-87L11	ROD, SHIFT (X)	1	W/TRANSOM(X)
2	25131-87L01	YOKE, SHIFTER	1	
3	25232-96302	MAGNET, GEAR CASE	2	
4	08332-1107A	E RING	4	
5	25141-87L00	HOUSING, SHIFT ROD GUIDE	1	
6	25223-94400	COVER, GUIDE HSG OIL SEAL	1	
7	29116-93J00	BOLT, SHIFT ROD HSG (6X20)	1	
8	09280-55006	O RING (D:3.4 ID:53.4)	1	
9	09282-08005	OIL SEAL (8X22X7)	1	

DF70A E01
DF70A E40
DF80A E01
DF80A E40
DF90A E01
DF90A E40
DF100B E01
DF100B E40

DF90A_E01_020_206A
CLUTCH ROD

FIG.206B

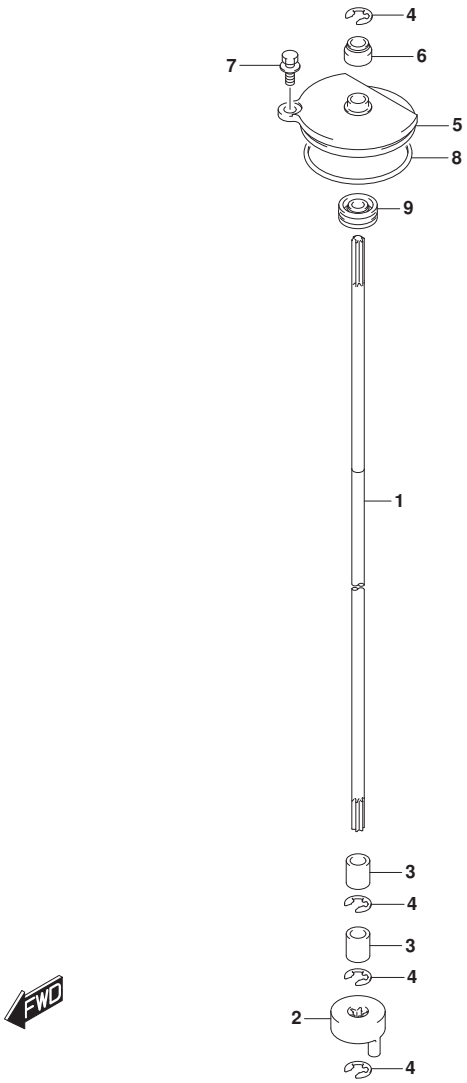

FIG.206B (1-E-7) CLUTCH ROD (DF70ATH E01)(DF90ATH E01)

REF NO.	PART NO.	DESCRIPTION	Q'TY	REMARKS
1	25111-87L01	ROD, SHIFT (L)	1	
2	25131-87L01	YOKE, SHIFTER	1	
3	25232-96302	MAGNET, GEAR CASE	2	
4	08332-1107A	E RING	4	
5	25141-87L00	HOUSING, SHIFT ROD GUIDE	1	
6	25223-94400	COVER, GUIDE HSG OIL SEAL	1	
7	29116-93J00	BOLT, SHIFT ROD HSG (6X20)	1	
8	09280-55006	O RING (D:3.4 ID:53.4)	1	
9	09282-08005	OIL SEAL (8X22X7)	1	

DF70ATH E01
DF90ATH E01

DF90A_E01_020_206B
CLUTCH ROD

FIG.206C

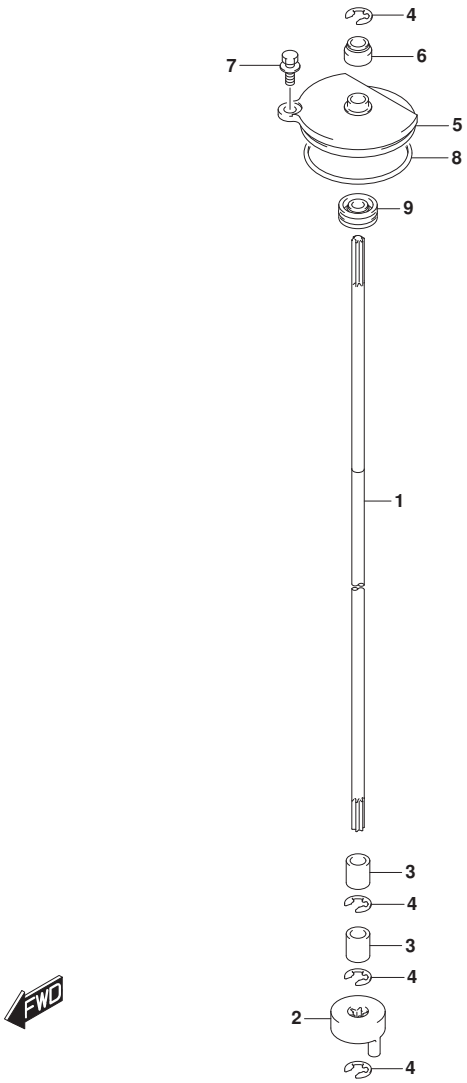

FIG.206C (1-E-8) CLUTCH ROD (DF70ATH E40)(DF90ATH E40)(DF90AWQH E40)

REF NO.	PART NO.	DESCRIPTION	Q'TY	REMARKS
1-1	25111-87L01	ROD, SHIFT (L)	1	W/TRANSOM(L)
1-2	25111-87L11	ROD, SHIFT (X)	1	W/TRANSOM(X)
2	25131-87L01	YOKE, SHIFTER	1	
3	25232-96302	MAGNET, GEAR CASE	2	
4	08332-1107A	E RING	4	
5	25141-87L00	HOUSING, SHIFT ROD GUIDE	1	
6	25223-94400	COVER, GUIDE HSG OIL SEAL	1	
7	29116-93J00	BOLT, SHIFT ROD HSG (6X20)	1	
8	09280-55006	O RING (D:3.4 ID:53.4)	1	
9	09282-08005	OIL SEAL (8X22X7)	1	

DF70ATH E40
DF90ATH E40
DF90AWQH E40

DF90A_E01_020_206C
CLUTCH ROD

FIG.220A

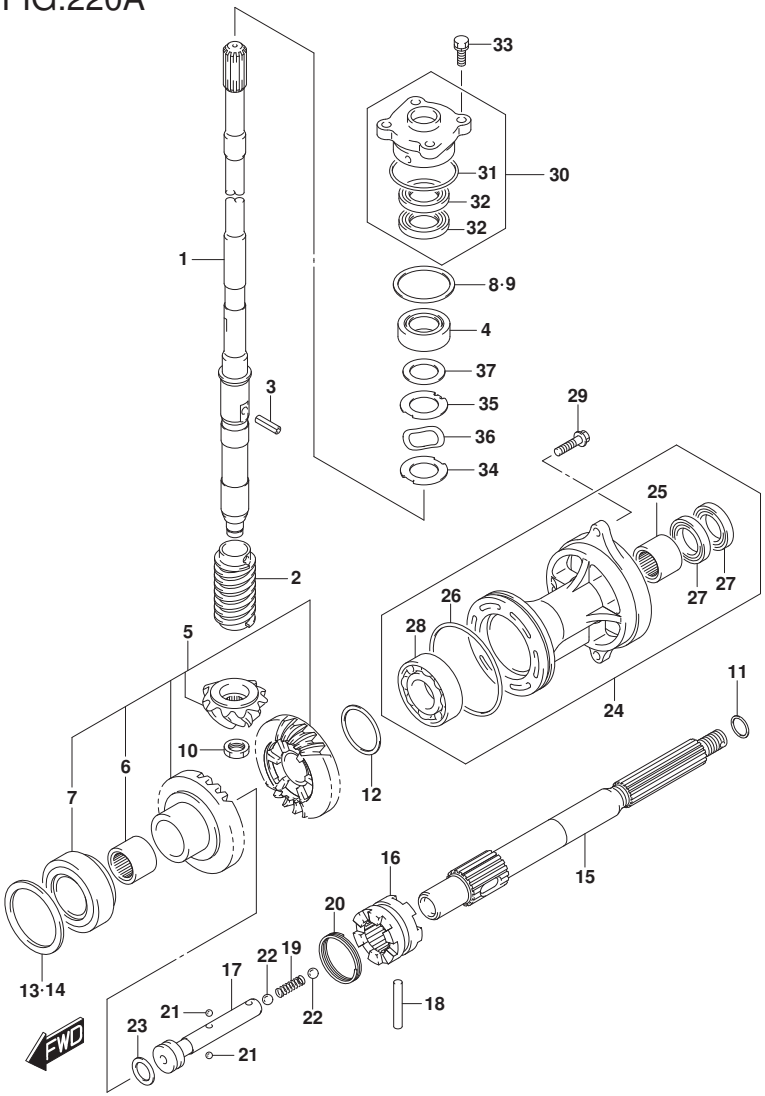

FIG.220A (1-E-9) TRANSMISSION (DF70A)(DF90A)(DF100B)

REF NO.	PART NO.	DESCRIPTION	Q'TY	REMARKS
1-1	57110-87L21	SHAFT ASSY, DRIVE (L)	1	W/TRANSOM(L)
1-2	57110-87L31	SHAFT ASSY, DRIVE (X)	1	W/TRANSOM(X)
2	57133-87L01	COLLAR, DRIVE SHAFT	1	
3	09205-05011	SPRING PIN (5X14)	1	
4	09265-25046	BEARING (25X52X19.25)	1	
5	57300-87890	PINION/GEAR SET	1	
6	09263-25067	.BEARING (25X32X26)	1	
7	09265-40003	.BEARING (40X75X26)	1	
8	57500-87873	SHIM SET, DRIVE SHAFT	1	
9-1	09181-40186	.SHIM (T:0.50)	1	
9-2	09181-41002	.SHIM (T:0.55)	1	
9-3	09181-41003	.SHIM (T:0.60)	1	
9-4	09181-41004	.SHIM (T:0.65)	1	
9-5	09181-41005	.SHIM (T:0.70)	1	
9-6	09181-41006	.SHIM (T:0.75)	1	
9-7	09181-40190	.SHIM (T:0.80)	1	
9-8	09181-41008	.SHIM (T:0.85)	1	
9-9	09181-41009	.SHIM (T:0.90)	1	
9-10	09181-41010	.SHIM (T:0.95)	1	
9-11	09181-40195	.SHIM (T:1.00)	1	
9-12	09181-41012	.SHIM (T:1.05)	1	
9-13	09181-41013	.SHIM (T:1.10)	1	
9-14	09181-41014	.SHIM (T:1.15)	1	
10	09140-14024	NUT	1	

FIG.220A

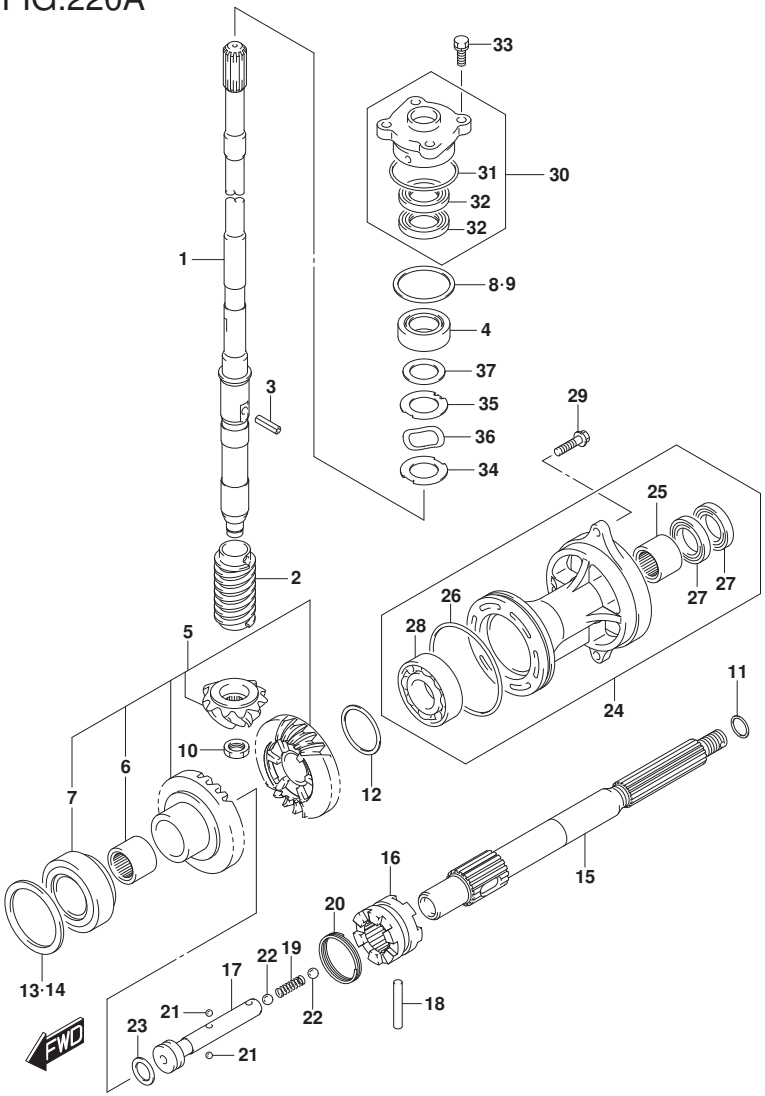

FIG.220A (1-E-10) TRANSMISSION (DF70A)(DF90A)(DF100B)

REF NO.	PART NO.	DESCRIPTION	Q'TY	REMARKS
11-1	09181-25130	SHIM (T:0.50)	1	PROP SHAFT REV THRUST
11-2	09181-25139	SHIM (T:1.00)	1	PROP SHAFT REV THRUST
11-3	09181-25143	SHIM (T:1.09)	1	PROP SHAFT REV THRUST
11-4	09181-25149	SHIM (T:1.21)	1	PROP SHAFT REV THRUST
11-5	09181-25153	SHIM (T:1.30)	1	PROP SHAFT REV THRUST
11-6	09181-25072	SHIM (T:1.40)	1	PROP SHAFT REV THRUST
11-7	09181-25073	SHIM (T:1.50)	1	PROP SHAFT REV THRUST
11-8	09181-25074	SHIM (T:1.60)	1	PROP SHAFT REV THRUST
11-9	09181-25075	SHIM (T:1.70)	1	PROP SHAFT REV THRUST
12-1	09181-40018	SHIM (T:0.55)	1	REV GEAR
12-2	09181-40004	SHIM (T:0.60)	1	REV GEAR
12-3	09181-40005	SHIM (T:0.65)	1	REV GEAR
12-4	09181-40006	SHIM (T:0.70)	1	REV GEAR
12-5	09181-40007	SHIM (T:0.75)	1	REV GEAR
12-6	09181-40008	SHIM (T:0.80)	1	REV GEAR
12-7	09181-40009	SHIM (T:0.85)	1	REV GEAR
12-8	09181-40010	SHIM (T:0.90)	1	REV GEAR
12-9	09181-40011	SHIM (T:0.95)	1	REV GEAR
12-10	09181-40012	SHIM (T:1.00)	1	REV GEAR
12-11	09181-40013	SHIM (T:1.05)	1	REV GEAR
13	57500-87882	SHIM SET, FORWARD GEAR	1	FWD GEAR
14-1	09181-64002	.SHIM (T:0.55)	1	FWD GEAR
14-2	09181-64003	.SHIM (T:0.60)	1	FWD GEAR
14-3	09181-64004	.SHIM (T:0.65)	1	FWD GEAR
14-4	09181-64005	.SHIM (T:0.70)	1	FWD GEAR

FIG.220A

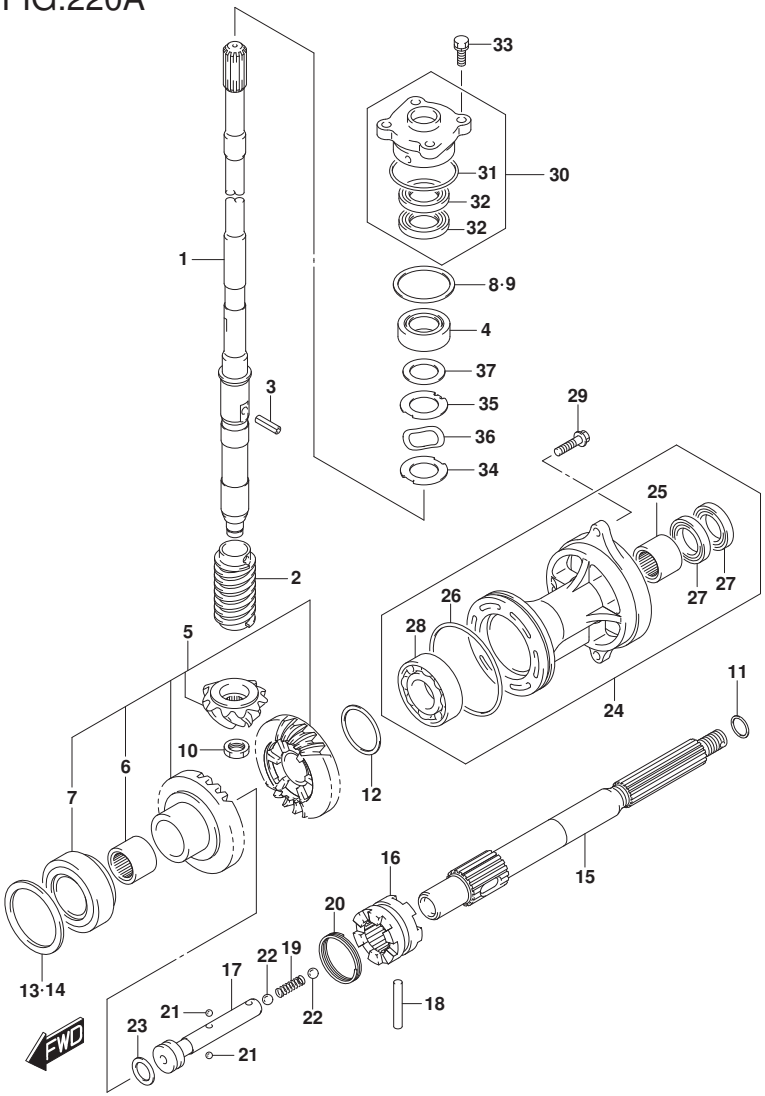

FIG.220A (1-E-11) TRANSMISSION (DF70A)(DF90A)(DF100B)

REF NO.	PART NO.	DESCRIPTION	Q'TY	REMARKS
14-5	09181-64006	.SHIM (T:0.75)	1	FWD GEAR
14-6	09181-64007	.SHIM (T:0.80)	1	FWD GEAR
14-7	09181-64008	.SHIM (T:0.85)	1	FWD GEAR
14-8	09181-64009	.SHIM (T:0.90)	1	FWD GEAR
14-9	09181-64010	.SHIM (T:0.95)	1	FWD GEAR
14-10	09181-64011	.SHIM (T:1.00)	1	FWD GEAR
15	57610-87L00	SHAFT, PROPELLER	1	
16	57621-87L10	SHIFTER, CLUTCH DOG	1	
17	57631-87L00	PIN, CONNECTOR	1	
18	09202-07003	PIN	1	
19	09440-09043	SPRING	1	
20	09440-42002	SPRING	1	
21	06111-07004	BALL	2	
22	06111-11004	BALL	2	
23	09181-25030	SHIM (25X32X3)	1	
24-1	56120-87L30-YAY	HOUSING, PROP SHAFT BRG (BLACK)	1	
24-2	56120-87L30-Y5S	HOUSING, PROP SHAFT BRG (WHITE)	1	
25	09263-25067	.BEARING (25X32X26)	1	
26	09280-92004	.O RING (D:3.1 ID:89.4)	1	
27	09282-25001	.OIL SEAL (25X38X8)	2	
28	08113-60087	.BEARING	1	
29	09116-08122	BOLT (8X30)	2	
30	56130-87L01	HOUSING, DRIVE SHAFT OIL SEAL	1	
31	09280-46004	.O RING (D:3.5,ID:45.7)	1	

FIG.220A

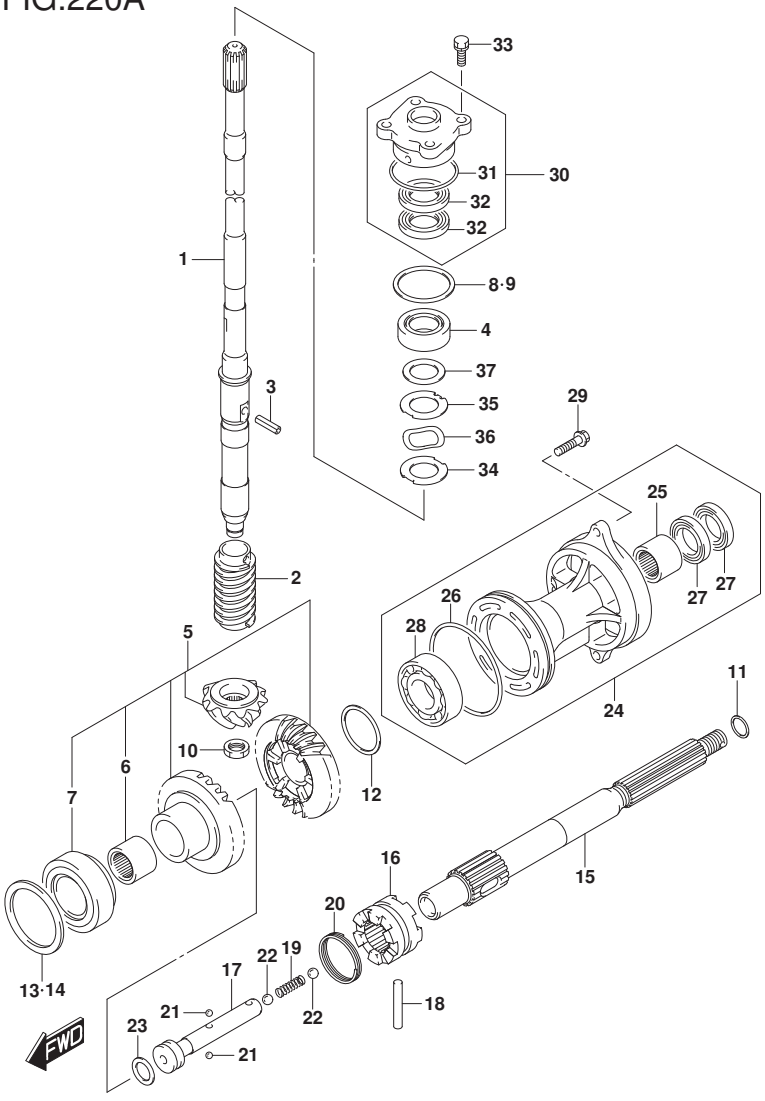

FIG.220A (1-E-12) TRANSMISSION (DF70A)(DF90A)(DF100B)

REF NO.	PART NO.	DESCRIPTION	Q'TY	REMARKS
32	09282-22007	.OIL SEAL (22X36X6)	2	
33	09117-08110	BOLT (8X25)	4	
34	57134-87L00	WASHER, DRIVE SHAFT	1	
35	57135-87L00	SPACER, DRIVE SHAFT	1	
36	09164-31001	WASHER	1	
37	09181-31001	SHIM (31X46X2)	1	

DF70A E01
DF70A E40
DF90A E01
DF90A E40
DF100B E01
DF100B E40

FIG.220B

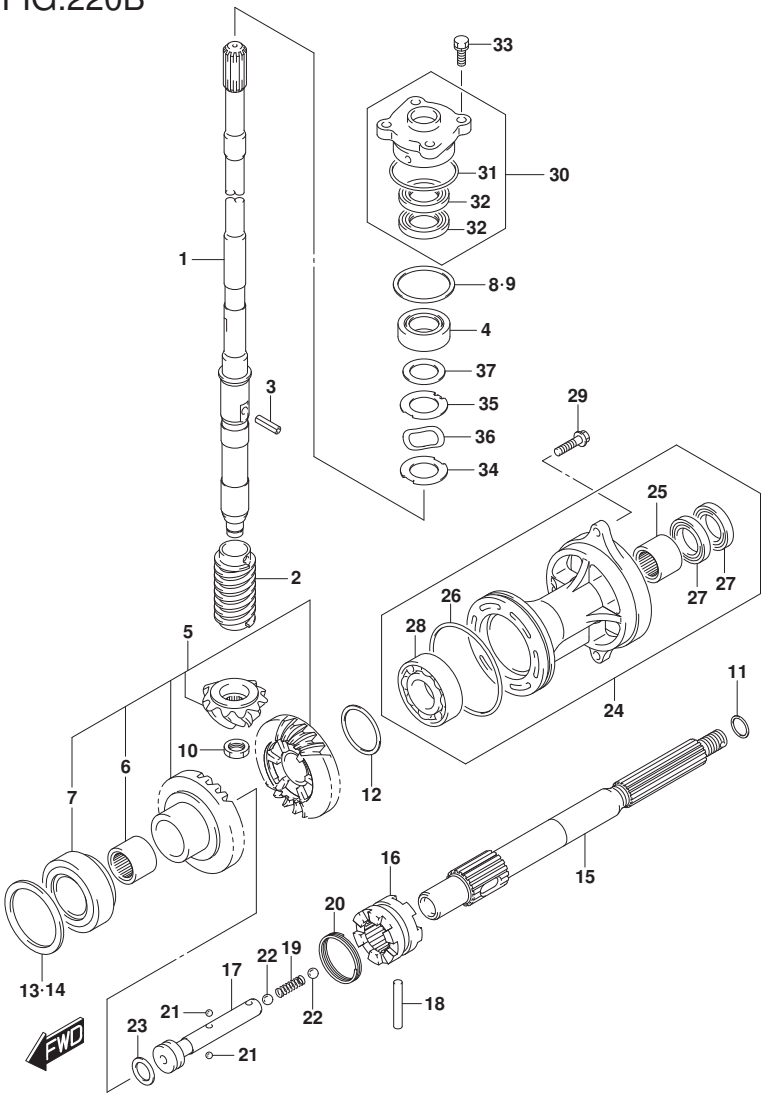

FIG.220B (1-E-13) TRANSMISSION (DF80A)

REF NO.	PART NO.	DESCRIPTION	Q'TY	REMARKS
1-1	57110-87L21	SHAFT ASSY, DRIVE (L)	1	W/TRANSOM(L)
1-2	57110-87L31	SHAFT ASSY, DRIVE (X)	1	W/TRANSOM(X)
2	57133-87L01	COLLAR, DRIVE SHAFT	1	
3	09205-05011	SPRING PIN (5X14)	1	
4	09265-25046	BEARING (25X52X19.25)	1	
5	57300-87890	PINION/GEAR SET	1	
6	09263-25067	.BEARING (25X32X26)	1	
7	09265-40003	.BEARING (40X75X26)	1	
8	57500-87873	SHIM SET, DRIVE SHAFT	1	
9-1	09181-40186	.SHIM (T:0.50)	1	
9-2	09181-41002	.SHIM (T:0.55)	1	
9-3	09181-41003	.SHIM (T:0.60)	1	
9-4	09181-41004	.SHIM (T:0.65)	1	
9-5	09181-41005	.SHIM (T:0.70)	1	
9-6	09181-41006	.SHIM (T:0.75)	1	
9-7	09181-40190	.SHIM (T:0.80)	1	
9-8	09181-41008	.SHIM (T:0.85)	1	
9-9	09181-41009	.SHIM (T:0.90)	1	
9-10	09181-41010	.SHIM (T:0.95)	1	
9-11	09181-40195	.SHIM (T:1.00)	1	
9-12	09181-41012	.SHIM (T:1.05)	1	
9-13	09181-41013	.SHIM (T:1.10)	1	
9-14	09181-41014	.SHIM (T:1.15)	1	
10	09140-14024	NUT	1	

FIG.220B

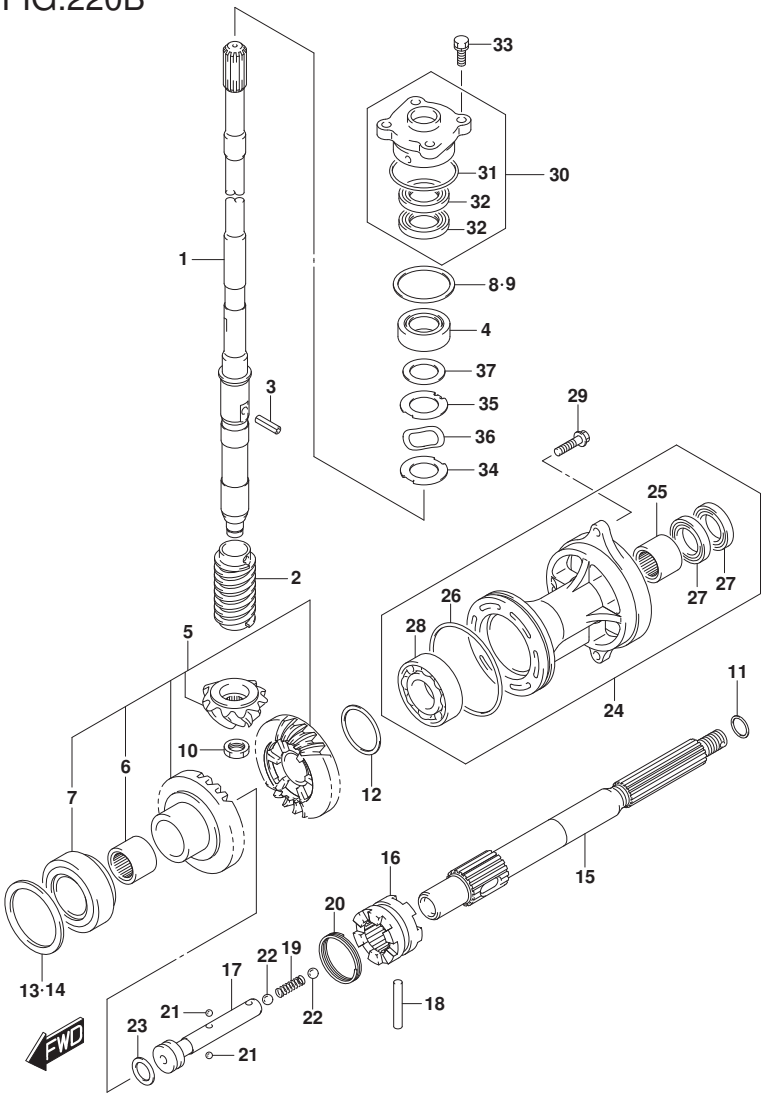

FIG.220B (1-E-14) TRANSMISSION (DF80A)

REF NO.	PART NO.	DESCRIPTION	Q'TY	REMARKS
11-1	09181-25130	SHIM (T:0.50)	1	PROP SHAFT REV THRUST
11-2	09181-25139	SHIM (T:1.00)	1	PROP SHAFT REV THRUST
11-3	09181-25143	SHIM (T:1.09)	1	PROP SHAFT REV THRUST
11-4	09181-25149	SHIM (T:1.21)	1	PROP SHAFT REV THRUST
11-5	09181-25153	SHIM (T:1.30)	1	PROP SHAFT REV THRUST
11-6	09181-25072	SHIM (T:1.40)	1	PROP SHAFT REV THRUST
11-7	09181-25073	SHIM (T:1.50)	1	PROP SHAFT REV THRUST
11-8	09181-25074	SHIM (T:1.60)	1	PROP SHAFT REV THRUST
11-9	09181-25075	SHIM (T:1.70)	1	PROP SHAFT REV THRUST
12-1	09181-40018	SHIM (T:0.55)	1	REV GEAR
12-2	09181-40004	SHIM (T:0.60)	1	REV GEAR
12-3	09181-40005	SHIM (T:0.65)	1	REV GEAR
12-4	09181-40006	SHIM (T:0.70)	1	REV GEAR
12-5	09181-40007	SHIM (T:0.75)	1	REV GEAR
12-6	09181-40008	SHIM (T:0.80)	1	REV GEAR
12-7	09181-40009	SHIM (T:0.85)	1	REV GEAR
12-8	09181-40010	SHIM (T:0.90)	1	REV GEAR
12-9	09181-40011	SHIM (T:0.95)	1	REV GEAR
12-10	09181-40012	SHIM (T:1.00)	1	REV GEAR
12-11	09181-40013	SHIM (T:1.05)	1	REV GEAR
13	57500-87882	SHIM SET, FORWARD GEAR	1	FWD GEAR
14-1	09181-64002	.SHIM (T:0.55)	1	FWD GEAR
14-2	09181-64003	.SHIM (T:0.60)	1	FWD GEAR
14-3	09181-64004	.SHIM (T:0.65)	1	FWD GEAR
14-4	09181-64005	.SHIM (T:0.70)	1	FWD GEAR

FIG.220B

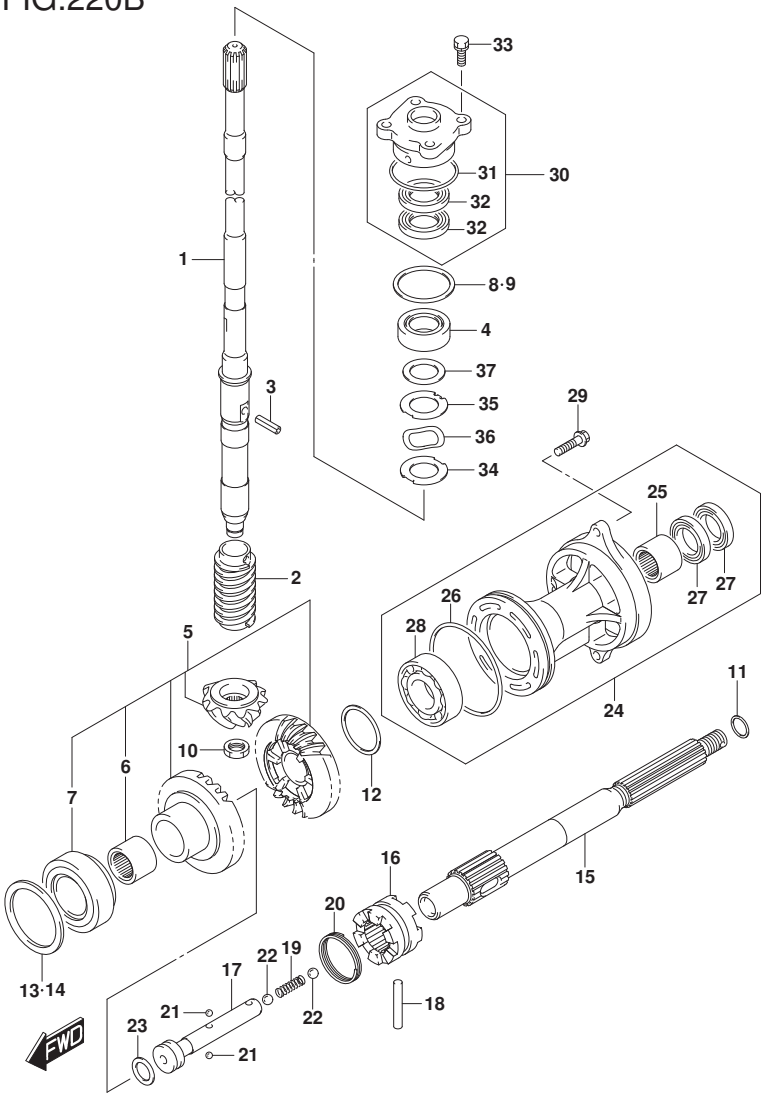

FIG.220B (1-E-15) TRANSMISSION (DF80A)

REF NO.	PART NO.	DESCRIPTION	Q'TY	REMARKS
14-5	09181-64006	.SHIM (T:0.75)	1	FWD GEAR
14-6	09181-64007	.SHIM (T:0.80)	1	FWD GEAR
14-7	09181-64008	.SHIM (T:0.85)	1	FWD GEAR
14-8	09181-64009	.SHIM (T:0.90)	1	FWD GEAR
14-9	09181-64010	.SHIM (T:0.95)	1	FWD GEAR
14-10	09181-64011	.SHIM (T:1.00)	1	FWD GEAR
15	57610-87L00	SHAFT, PROPELLER	1	
16	57621-87L10	SHIFTER, CLUTCH DOG	1	
17	57631-87L00	PIN, CONNECTOR	1	
18	09202-07003	PIN	1	
19	09440-09043	SPRING	1	
20	09440-42002	SPRING	1	
21	06111-07004	BALL	2	
22	06111-11004	BALL	2	
23	09181-25030	SHIM (25X32X3)	1	
24	56120-87L30-YAY	HOUSING, PROP SHAFT BRG (BLACK)	1	
25	09263-25067	.BEARING (25X32X26)	1	
26	09280-92004	.O RING (D:3.1 ID:89.4)	1	
27	09282-25001	.OIL SEAL (25X38X8)	2	
28	08113-60087	.BEARING	1	
29	09116-08122	BOLT (8X30)	2	
30	56130-87L01	HOUSING, DRIVE SHAFT OIL SEAL	1	
31	09280-46004	.O RING (D:3.5,ID:45.7)	1	
32	09282-22007	.OIL SEAL (22X36X6)	2	

FIG.220B

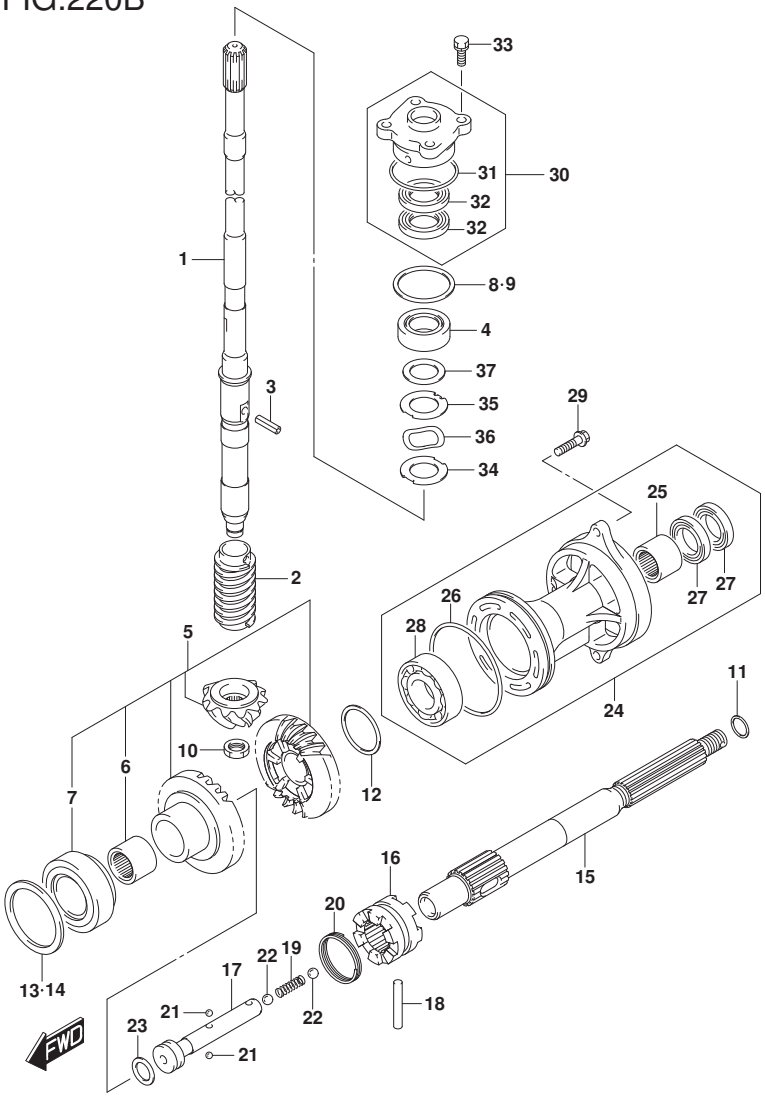

FIG.220B (1-F-2) TRANSMISSION (DF80A)

REF NO.	PART NO.	DESCRIPTION	Q'TY	REMARKS
33	09117-08110	BOLT (8X25)	4	
34	57134-87L00	WASHER, DRIVE SHAFT	1	
35	57135-87L00	SPACER, DRIVE SHAFT	1	
36	09164-31001	WASHER	1	
37	09181-31001	SHIM (31X46X2)	1	

DF80A E01
DF80A E40

DF90A_E01_020_220B
TRANSMISSION

FIG.220C

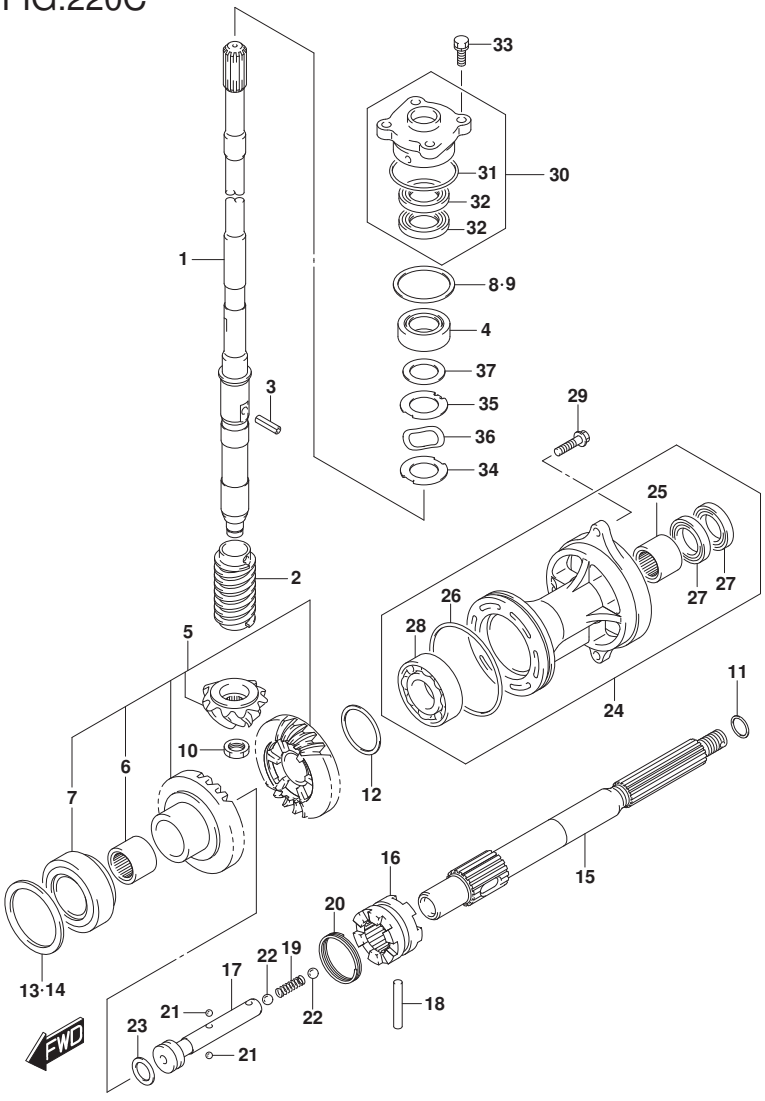

FIG.220C (1-F-3) TRANSMISSION (DF70ATH E01)(DF90ATH E01)

REF NO.	PART NO.	DESCRIPTION	Q'TY	REMARKS
1	57110-87L21	SHAFT ASSY, DRIVE (L)	1	
2	57133-87L01	COLLAR, DRIVE SHAFT	1	
3	09205-05011	SPRING PIN (5X14)	1	
4	09265-25046	BEARING (25X52X19.25)	1	
5	57300-87890	PINION/GEAR SET	1	
6	09263-25067	.BEARING (25X32X26)	1	
7	09265-40003	.BEARING (40X75X26)	1	
8	57500-87873	SHIM SET, DRIVE SHAFT	1	
9-1	09181-40186	.SHIM (T:0.50)	1	
9-2	09181-41002	.SHIM (T:0.55)	1	
9-3	09181-41003	.SHIM (T:0.60)	1	
9-4	09181-41004	.SHIM (T:0.65)	1	
9-5	09181-41005	.SHIM (T:0.70)	1	
9-6	09181-41006	.SHIM (T:0.75)	1	
9-7	09181-40190	.SHIM (T:0.80)	1	
9-8	09181-41008	.SHIM (T:0.85)	1	
9-9	09181-41009	.SHIM (T:0.90)	1	
9-10	09181-41010	.SHIM (T:0.95)	1	
9-11	09181-40195	.SHIM (T:1.00)	1	
9-12	09181-41012	.SHIM (T:1.05)	1	
9-13	09181-41013	.SHIM (T:1.10)	1	
9-14	09181-41014	.SHIM (T:1.15)	1	
10	09140-14024	NUT	1	

FIG.220C

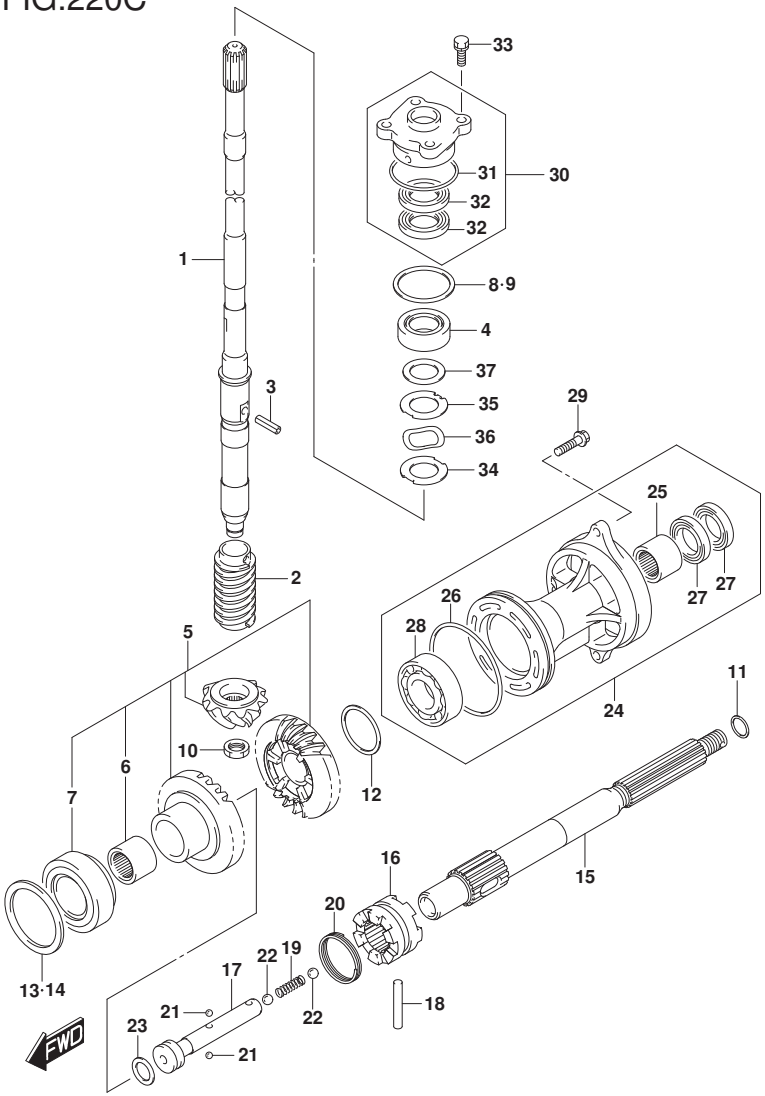

FIG.220C (1-F-4) TRANSMISSION (DF70ATH E01)(DF90ATH E01)

REF NO.	PART NO.	DESCRIPTION	Q'TY	REMARKS
11-1	09181-25130	SHIM (T:0.50)	1	PROP SHAFT REV THRUST
11-2	09181-25139	SHIM (T:1.00)	1	PROP SHAFT REV THRUST
11-3	09181-25143	SHIM (T:1.09)	1	PROP SHAFT REV THRUST
11-4	09181-25149	SHIM (T:1.21)	1	PROP SHAFT REV THRUST
11-5	09181-25153	SHIM (T:1.30)	1	PROP SHAFT REV THRUST
11-6	09181-25072	SHIM (T:1.40)	1	PROP SHAFT REV THRUST
11-7	09181-25073	SHIM (T:1.50)	1	PROP SHAFT REV THRUST
11-8	09181-25074	SHIM (T:1.60)	1	PROP SHAFT REV THRUST
11-9	09181-25075	SHIM (T:1.70)	1	PROP SHAFT REV THRUST
12-1	09181-40018	SHIM (T:0.55)	1	REV GEAR
12-2	09181-40004	SHIM (T:0.60)	1	REV GEAR
12-3	09181-40005	SHIM (T:0.65)	1	REV GEAR
12-4	09181-40006	SHIM (T:0.70)	1	REV GEAR
12-5	09181-40007	SHIM (T:0.75)	1	REV GEAR
12-6	09181-40008	SHIM (T:0.80)	1	REV GEAR
12-7	09181-40009	SHIM (T:0.85)	1	REV GEAR
12-8	09181-40010	SHIM (T:0.90)	1	REV GEAR
12-9	09181-40011	SHIM (T:0.95)	1	REV GEAR
12-10	09181-40012	SHIM (T:1.00)	1	REV GEAR
12-11	09181-40013	SHIM (T:1.05)	1	REV GEAR
13	57500-87882	SHIM SET, FORWARD GEAR	1	FWD GEAR
14-1	09181-64002	.SHIM (T:0.55)	1	FWD GEAR
14-2	09181-64003	.SHIM (T:0.60)	1	FWD GEAR
14-3	09181-64004	.SHIM (T:0.65)	1	FWD GEAR
14-4	09181-64005	.SHIM (T:0.70)	1	FWD GEAR

FIG.220C

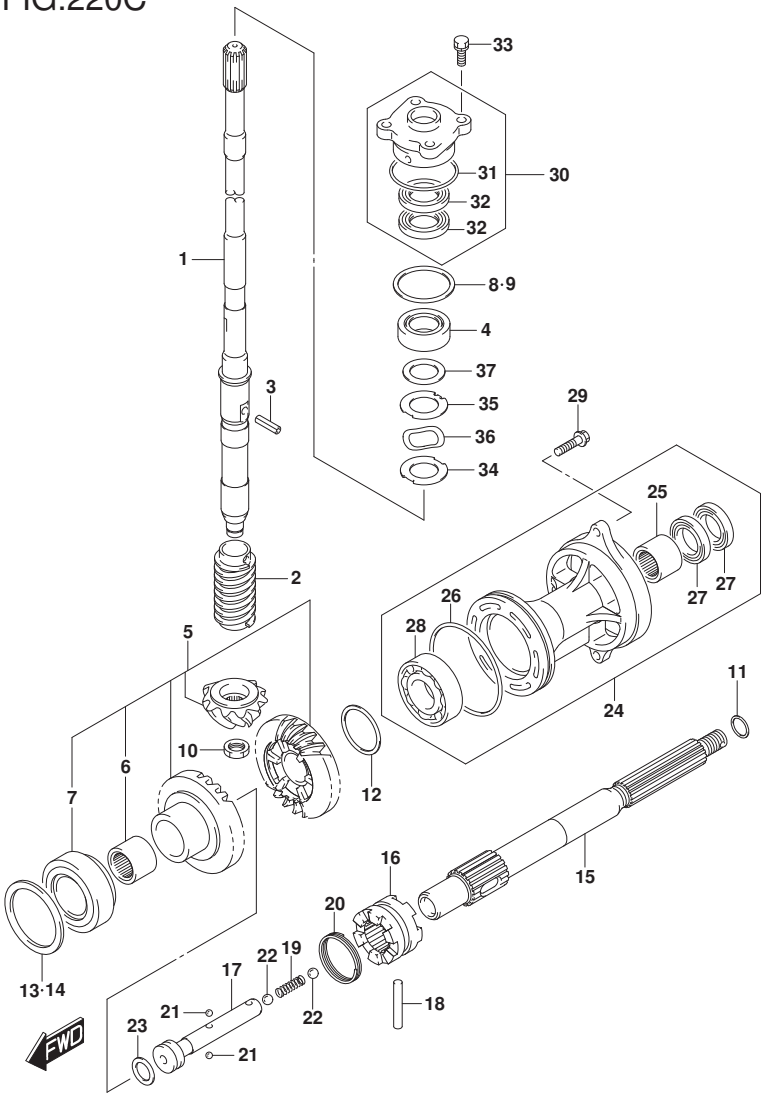

FIG.220C (1-F-5) TRANSMISSION (DF70ATH E01)(DF90ATH E01)

REF NO.	PART NO.	DESCRIPTION	Q'TY	REMARKS
14-5	09181-64006	.SHIM (T:0.75)	1	FWD GEAR
14-6	09181-64007	.SHIM (T:0.80)	1	FWD GEAR
14-7	09181-64008	.SHIM (T:0.85)	1	FWD GEAR
14-8	09181-64009	.SHIM (T:0.90)	1	FWD GEAR
14-9	09181-64010	.SHIM (T:0.95)	1	FWD GEAR
14-10	09181-64011	.SHIM (T:1.00)	1	FWD GEAR
15	57610-87L00	SHAFT, PROPELLER	1	
16	57621-87L10	SHIFTER, CLUTCH DOG	1	
17	57631-87L00	PIN, CONNECTOR	1	
18	09202-07003	PIN	1	
19	09440-09043	SPRING	1	
20	09440-42002	SPRING	1	
21	06111-07004	BALL	2	
22	06111-11004	BALL	2	
23	09181-25030	SHIM (25X32X3)	1	
24	56120-87L30-YAY	HOUSING, PROP SHAFT BRG (BLACK)	1	
25	09263-25067	.BEARING (25X32X26)	1	
26	09280-92004	.O RING (D:3.1 ID:89.4)	1	
27	09282-25001	.OIL SEAL (25X38X8)	2	
28	08113-60087	.BEARING	1	
29	09116-08122	BOLT (8X30)	2	
30	56130-87L01	HOUSING, DRIVE SHAFT OIL SEAL	1	
31	09280-46004	.O RING (D:3.5,ID:45.7)	1	
32	09282-22007	.OIL SEAL (22X36X6)	2	

FIG.220C

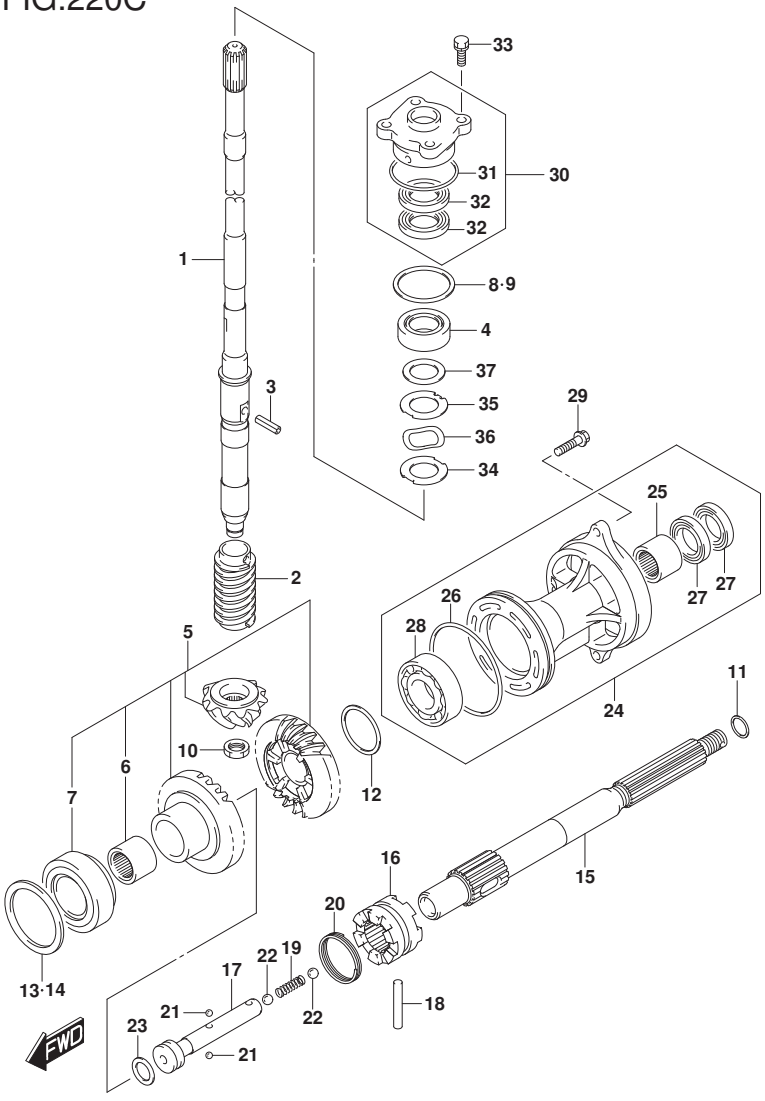

FIG.220C (1-F-6) TRANSMISSION (DF70ATH E01)(DF90ATH E01)

REF NO.	PART NO.	DESCRIPTION	Q'TY	REMARKS
33	09117-08110	BOLT (8X25)	4	
34	57134-87L00	WASHER, DRIVE SHAFT	1	
35	57135-87L00	SPACER, DRIVE SHAFT	1	
36	09164-31001	WASHER	1	
37	09181-31001	SHIM (31X46X2)	1	

DF70ATH E01
DF90ATH E01

DF90A_E01_020_220C
TRANSMISSION

FIG.220D

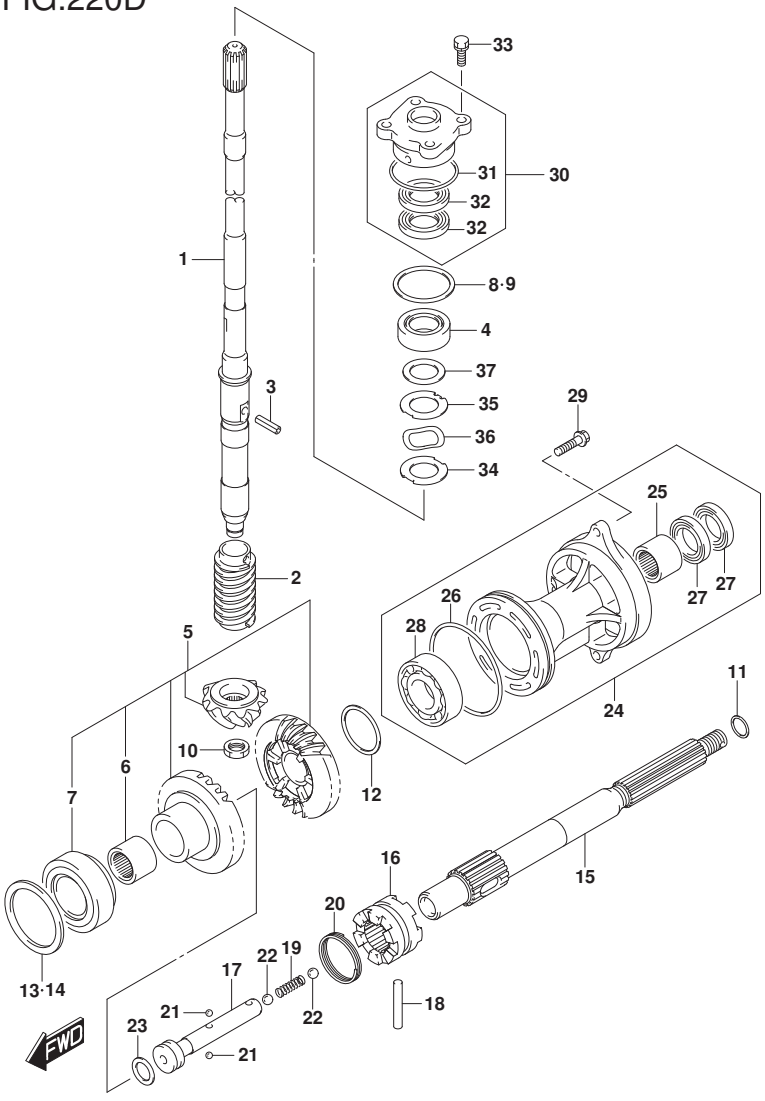

FIG.220D (1-F-7) TRANSMISSION (DF70ATH E40)(DF90ATH E40)

REF NO.	PART NO.	DESCRIPTION	Q'TY	REMARKS
1-1	57110-87L21	SHAFT ASSY, DRIVE (L)	1	W/TRANSOM(L)
1-2	57110-87L31	SHAFT ASSY, DRIVE (X)	1	W/TRANSOM(X)
2	57133-87L01	COLLAR, DRIVE SHAFT	1	
3	09205-05011	SPRING PIN (5X14)	1	
4	09265-25046	BEARING (25X52X19.25)	1	
5	57300-87890	PINION/GEAR SET	1	
6	09263-25067	.BEARING (25X32X26)	1	
7	09265-40003	.BEARING (40X75X26)	1	
8	57500-87873	SHIM SET, DRIVE SHAFT	1	
9-1	09181-40186	.SHIM (T:0.50)	1	
9-2	09181-41002	.SHIM (T:0.55)	1	
9-3	09181-41003	.SHIM (T:0.60)	1	
9-4	09181-41004	.SHIM (T:0.65)	1	
9-5	09181-41005	.SHIM (T:0.70)	1	
9-6	09181-41006	.SHIM (T:0.75)	1	
9-7	09181-40190	.SHIM (T:0.80)	1	
9-8	09181-41008	.SHIM (T:0.85)	1	
9-9	09181-41009	.SHIM (T:0.90)	1	
9-10	09181-41010	.SHIM (T:0.95)	1	
9-11	09181-40195	.SHIM (T:1.00)	1	
9-12	09181-41012	.SHIM (T:1.05)	1	
9-13	09181-41013	.SHIM (T:1.10)	1	
9-14	09181-41014	.SHIM (T:1.15)	1	
10	09140-14024	NUT	1	

FIG.220D

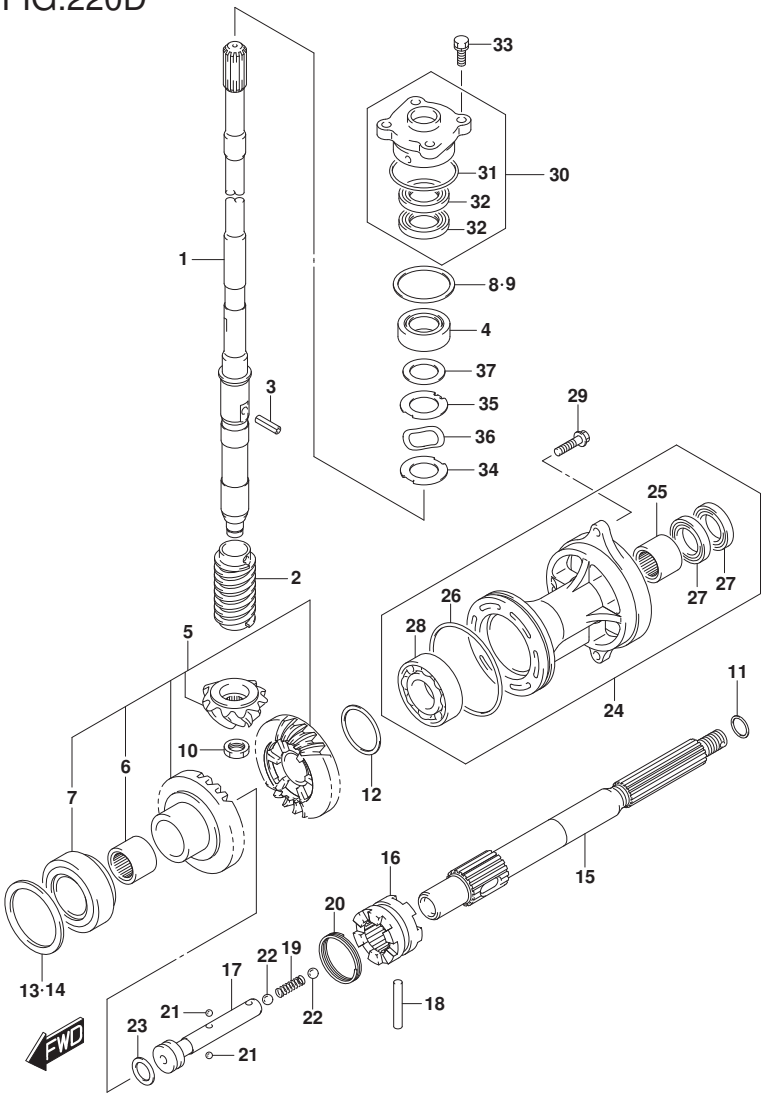

FIG.220D (1-F-8) TRANSMISSION (DF70ATH E40)(DF90ATH E40)

REF NO.	PART NO.	DESCRIPTION	Q'TY	REMARKS
11-1	09181-25130	SHIM (T:0.50)	1	PROP SHAFT REV THRUST
11-2	09181-25139	SHIM (T:1.00)	1	PROP SHAFT REV THRUST
11-3	09181-25143	SHIM (T:1.09)	1	PROP SHAFT REV THRUST
11-4	09181-25149	SHIM (T:1.21)	1	PROP SHAFT REV THRUST
11-5	09181-25153	SHIM (T:1.30)	1	PROP SHAFT REV THRUST
11-6	09181-25072	SHIM (T:1.40)	1	PROP SHAFT REV THRUST
11-7	09181-25073	SHIM (T:1.50)	1	PROP SHAFT REV THRUST
11-8	09181-25074	SHIM (T:1.60)	1	PROP SHAFT REV THRUST
11-9	09181-25075	SHIM (T:1.70)	1	PROP SHAFT REV THRUST
12-1	09181-40018	SHIM (T:0.55)	1	REV GEAR
12-2	09181-40004	SHIM (T:0.60)	1	REV GEAR
12-3	09181-40005	SHIM (T:0.65)	1	REV GEAR
12-4	09181-40006	SHIM (T:0.70)	1	REV GEAR
12-5	09181-40007	SHIM (T:0.75)	1	REV GEAR
12-6	09181-40008	SHIM (T:0.80)	1	REV GEAR
12-7	09181-40009	SHIM (T:0.85)	1	REV GEAR
12-8	09181-40010	SHIM (T:0.90)	1	REV GEAR
12-9	09181-40011	SHIM (T:0.95)	1	REV GEAR
12-10	09181-40012	SHIM (T:1.00)	1	REV GEAR
12-11	09181-40013	SHIM (T:1.05)	1	REV GEAR
13	57500-87882	SHIM SET, FORWARD GEAR	1	FWD GEAR
14-1	09181-64002	.SHIM (T:0.55)	1	FWD GEAR
14-2	09181-64003	.SHIM (T:0.60)	1	FWD GEAR
14-3	09181-64004	.SHIM (T:0.65)	1	FWD GEAR
14-4	09181-64005	.SHIM (T:0.70)	1	FWD GEAR

FIG.220D

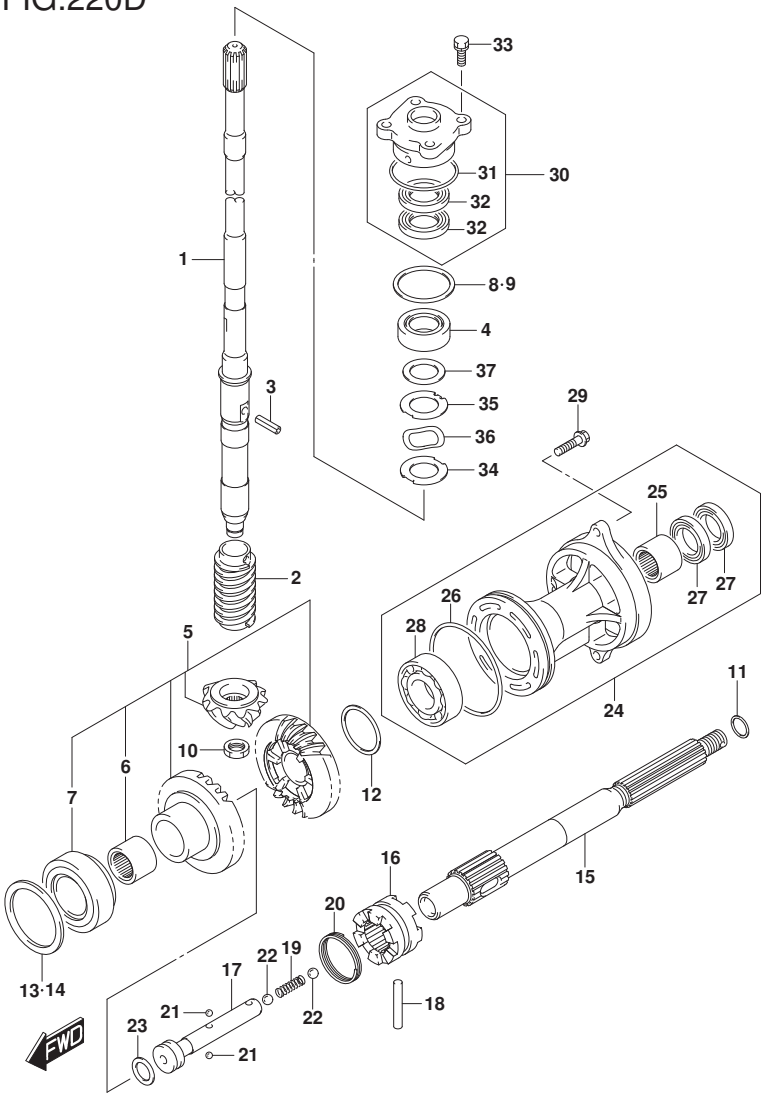

FIG.220D (1-F-9) TRANSMISSION (DF70ATH E40)(DF90ATH E40)

REF NO.	PART NO.	DESCRIPTION	Q'TY	REMARKS
14-5	09181-64006	.SHIM (T:0.75)	1	FWD GEAR
14-6	09181-64007	.SHIM (T:0.80)	1	FWD GEAR
14-7	09181-64008	.SHIM (T:0.85)	1	FWD GEAR
14-8	09181-64009	.SHIM (T:0.90)	1	FWD GEAR
14-9	09181-64010	.SHIM (T:0.95)	1	FWD GEAR
14-10	09181-64011	.SHIM (T:1.00)	1	FWD GEAR
15	57610-87L00	SHAFT, PROPELLER	1	
16	57621-87L10	SHIFTER, CLUTCH DOG	1	
17	57631-87L00	PIN, CONNECTOR	1	
18	09202-07003	PIN	1	
19	09440-09043	SPRING	1	
20	09440-42002	SPRING	1	
21	06111-07004	BALL	2	
22	06111-11004	BALL	2	
23	09181-25030	SHIM (25X32X3)	1	
24	56120-87L30-YAY	HOUSING, PROP SHAFT BRG (BLACK)	1	
25	09263-25067	.BEARING (25X32X26)	1	
26	09280-92004	.O RING (D:3.1 ID:89.4)	1	
27	09282-25001	.OIL SEAL (25X38X8)	2	
28	08113-60087	.BEARING	1	
29	09116-08122	BOLT (8X30)	2	
30	56130-87L01	HOUSING, DRIVE SHAFT OIL SEAL	1	
31	09280-46004	.O RING (D:3.5,ID:45.7)	1	
32	09282-22007	.OIL SEAL (22X36X6)	2	

FIG.220D

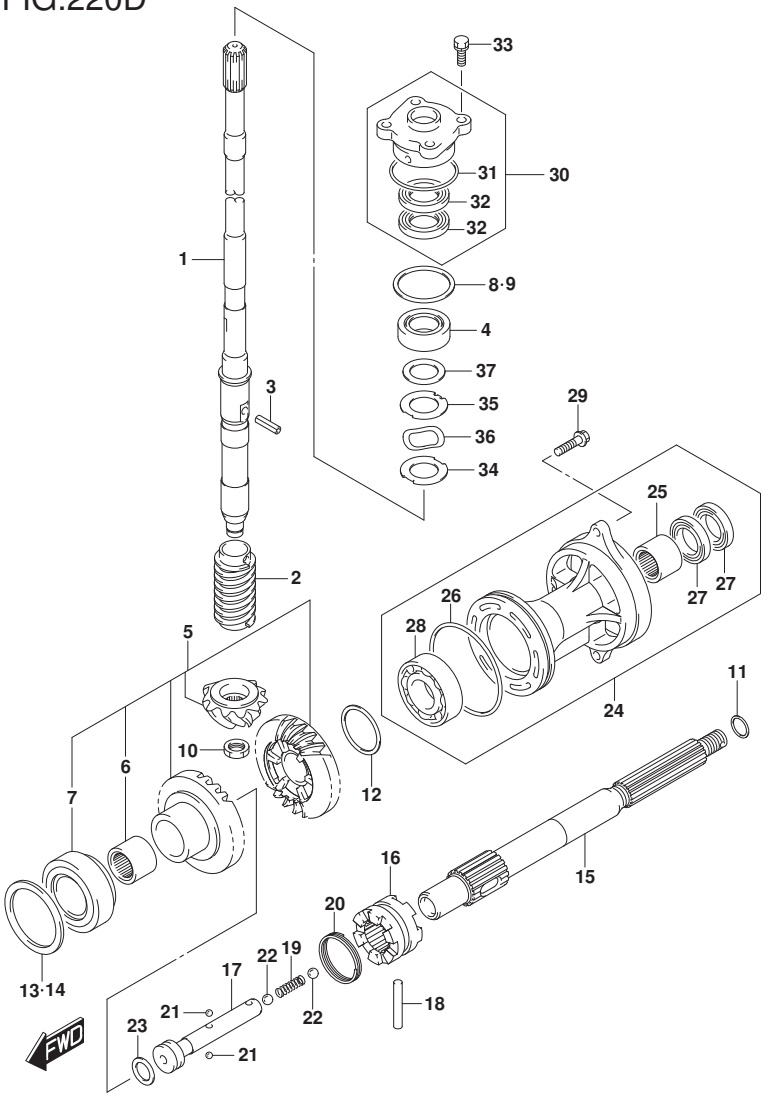

FIG.220D (1-F-10) TRANSMISSION (DF70ATH E40)(DF90ATH E40)

REF NO.	PART NO.	DESCRIPTION	Q'TY	REMARKS
33	09117-08110	BOLT (8X25)	4	
34	57134-87L00	WASHER, DRIVE SHAFT	1	
35	57135-87L00	SPACER, DRIVE SHAFT	1	
36	09164-31001	WASHER	1	
37	09181-31001	SHIM (31X46X2)	1	

DF70ATH E40
DF90ATH E40

FIG.220E

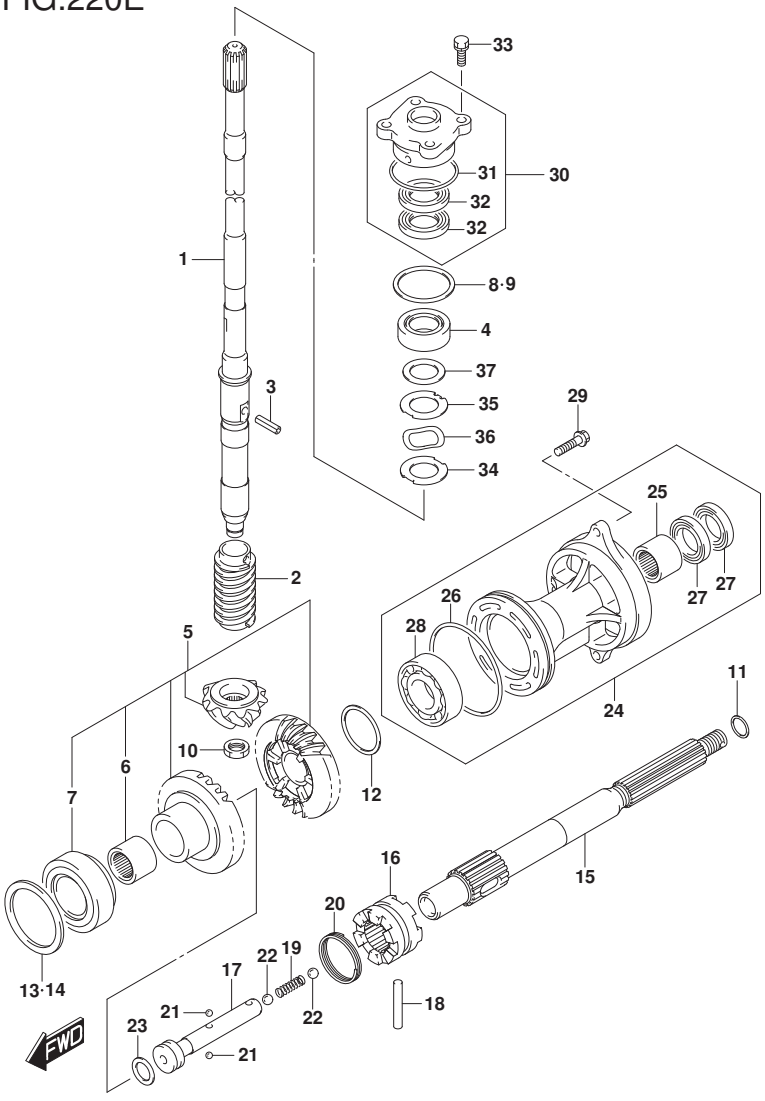

FIG.220E (1-F-11) TRANSMISSION (DF90AWQH E40)

REF NO.	PART NO.	DESCRIPTION	Q'TY	REMARKS
1-1	57110-87L21	SHAFT ASSY, DRIVE (L)	1	W/TRANSOM(L)
1-2	57110-87L31	SHAFT ASSY, DRIVE (X)	1	W/TRANSOM(X)
2	57133-87L01	COLLAR, DRIVE SHAFT	1	
3	09205-05011	SPRING PIN (5X14)	1	
4	09265-25046	BEARING (25X52X19.25)	1	
5	57300-87890	PINION/GEAR SET	1	
6	09263-25067	.BEARING (25X32X26)	1	
7	09265-40003	.BEARING (40X75X26)	1	
8	57500-87873	SHIM SET, DRIVE SHAFT	1	
9-1	09181-40186	.SHIM (T:0.50)	1	
9-2	09181-41002	.SHIM (T:0.55)	1	
9-3	09181-41003	.SHIM (T:0.60)	1	
9-4	09181-41004	.SHIM (T:0.65)	1	
9-5	09181-41005	.SHIM (T:0.70)	1	
9-6	09181-41006	.SHIM (T:0.75)	1	
9-7	09181-40190	.SHIM (T:0.80)	1	
9-8	09181-41008	.SHIM (T:0.85)	1	
9-9	09181-41009	.SHIM (T:0.90)	1	
9-10	09181-41010	.SHIM (T:0.95)	1	
9-11	09181-40195	.SHIM (T:1.00)	1	
9-12	09181-41012	.SHIM (T:1.05)	1	
9-13	09181-41013	.SHIM (T:1.10)	1	
9-14	09181-41014	.SHIM (T:1.15)	1	
10	09140-14024	NUT	1	

FIG.220E

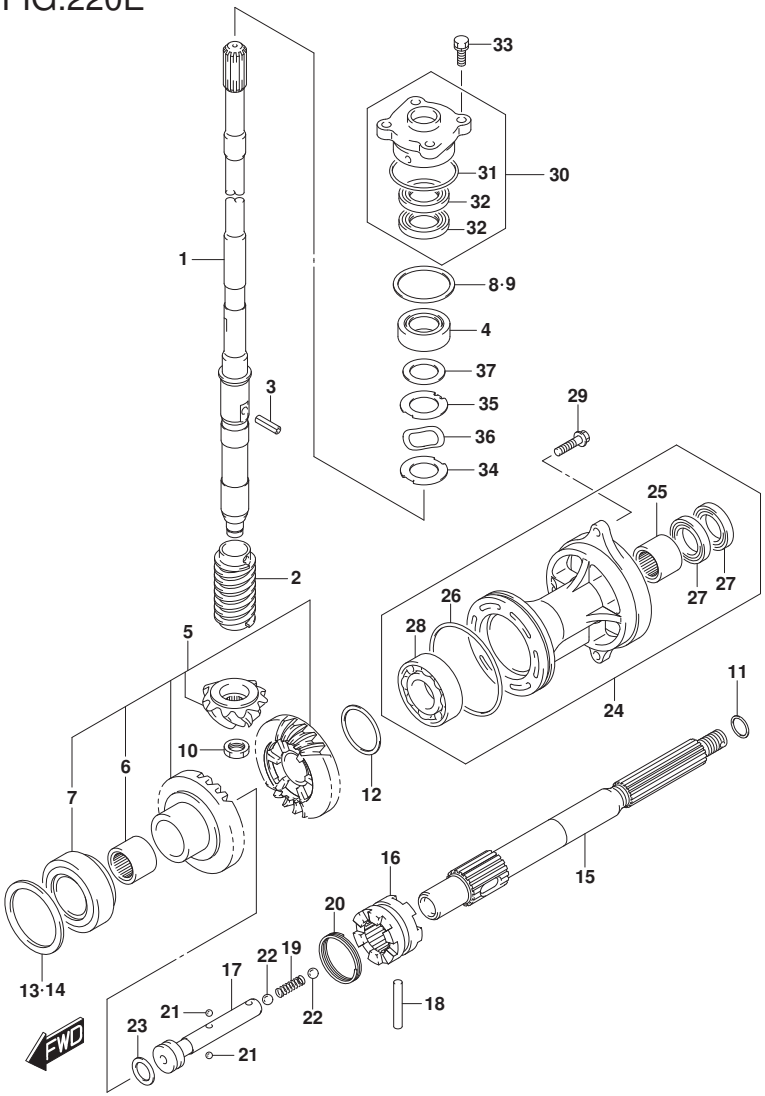

FIG.220E (1-F-12) TRANSMISSION (DF90AWQH E40)

REF NO.	PART NO.	DESCRIPTION	Q'TY	REMARKS
11-1	09181-25130	SHIM (T:0.50)	1	PROP SHAFT REV THRUST
11-2	09181-25139	SHIM (T:1.00)	1	PROP SHAFT REV THRUST
11-3	09181-25143	SHIM (T:1.09)	1	PROP SHAFT REV THRUST
11-4	09181-25149	SHIM (T:1.21)	1	PROP SHAFT REV THRUST
11-5	09181-25153	SHIM (T:1.30)	1	PROP SHAFT REV THRUST
11-6	09181-25072	SHIM (T:1.40)	1	PROP SHAFT REV THRUST
11-7	09181-25073	SHIM (T:1.50)	1	PROP SHAFT REV THRUST
11-8	09181-25074	SHIM (T:1.60)	1	PROP SHAFT REV THRUST
11-9	09181-25075	SHIM (T:1.70)	1	PROP SHAFT REV THRUST
12-1	09181-40018	SHIM (T:0.55)	1	REV GEAR
12-2	09181-40004	SHIM (T:0.60)	1	REV GEAR
12-3	09181-40005	SHIM (T:0.65)	1	REV GEAR
12-4	09181-40006	SHIM (T:0.70)	1	REV GEAR
12-5	09181-40007	SHIM (T:0.75)	1	REV GEAR
12-6	09181-40008	SHIM (T:0.80)	1	REV GEAR
12-7	09181-40009	SHIM (T:0.85)	1	REV GEAR
12-8	09181-40010	SHIM (T:0.90)	1	REV GEAR
12-9	09181-40011	SHIM (T:0.95)	1	REV GEAR
12-10	09181-40012	SHIM (T:1.00)	1	REV GEAR
12-11	09181-40013	SHIM (T:1.05)	1	REV GEAR
13	57500-87882	SHIM SET, FORWARD GEAR	1	FWD GEAR
14-1	09181-64002	.SHIM (T:0.55)	1	FWD GEAR
14-2	09181-64003	.SHIM (T:0.60)	1	FWD GEAR
14-3	09181-64004	.SHIM (T:0.65)	1	FWD GEAR
14-4	09181-64005	.SHIM (T:0.70)	1	FWD GEAR

FIG.220E

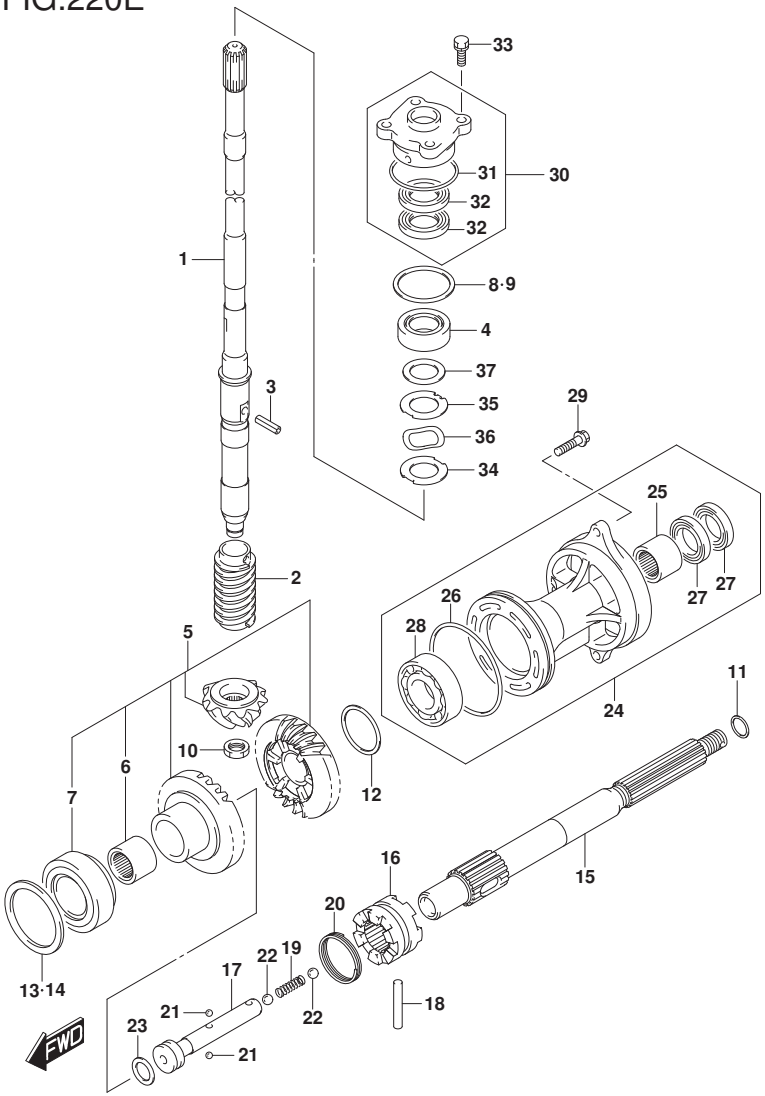

FIG.220E (1-F-13) TRANSMISSION (DF90AWQH E40)

REF NO.	PART NO.	DESCRIPTION	Q'TY	REMARKS
14-5	09181-64006	.SHIM (T:0.75)	1	FWD GEAR
14-6	09181-64007	.SHIM (T:0.80)	1	FWD GEAR
14-7	09181-64008	.SHIM (T:0.85)	1	FWD GEAR
14-8	09181-64009	.SHIM (T:0.90)	1	FWD GEAR
14-9	09181-64010	.SHIM (T:0.95)	1	FWD GEAR
14-10	09181-64011	.SHIM (T:1.00)	1	FWD GEAR
15	57610-87L00	SHAFT, PROPELLER	1	
16	57621-87L10	SHIFTER, CLUTCH DOG	1	
17	57631-87L00	PIN, CONNECTOR	1	
18	09202-07003	PIN	1	
19	09440-09043	SPRING	1	
20	09440-42002	SPRING	1	
21	06111-07004	BALL	2	
22	06111-11004	BALL	2	
23	09181-25030	SHIM (25X32X3)	1	
24	56120-87L30-YAY	HOUSING, PROP SHAFT BRG (BLACK)	1	
25	09263-25067	.BEARING (25X32X26)	1	
26	09280-92004	.O RING (D:3.1 ID:89.4)	1	
27	09282-25001	.OIL SEAL (25X38X8)	2	
28	08113-60087	.BEARING	1	
29	09116-08122	BOLT (8X30)	2	
30	56130-87L01	HOUSING, DRIVE SHAFT OIL SEAL	1	
31	09280-46004	.O RING (D:3.5,ID:45.7)	1	
32	09282-22007	.OIL SEAL (22X36X6)	2	

FIG.220E

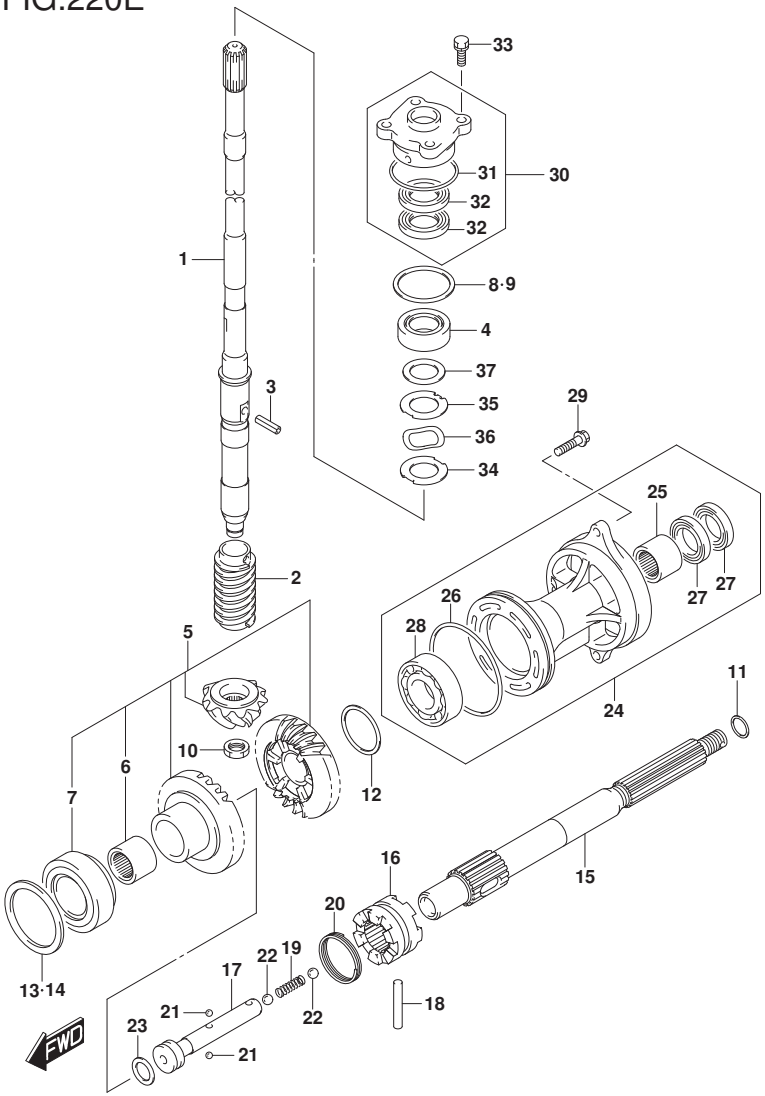

FIG.220E (1-F-14) TRANSMISSION (DF90AWQH E40)

REF NO.	PART NO.	DESCRIPTION	Q'TY	REMARKS
33	09117-08110	BOLT (8X25)	4	
34	57134-87L00	WASHER, DRIVE SHAFT	1	
35	57135-87L00	SPACER, DRIVE SHAFT	1	
36	09164-31001	WASHER	1	
37	09181-31001	SHIM (31X46X2)	1	

DF90AWQH E40

FIG.301A

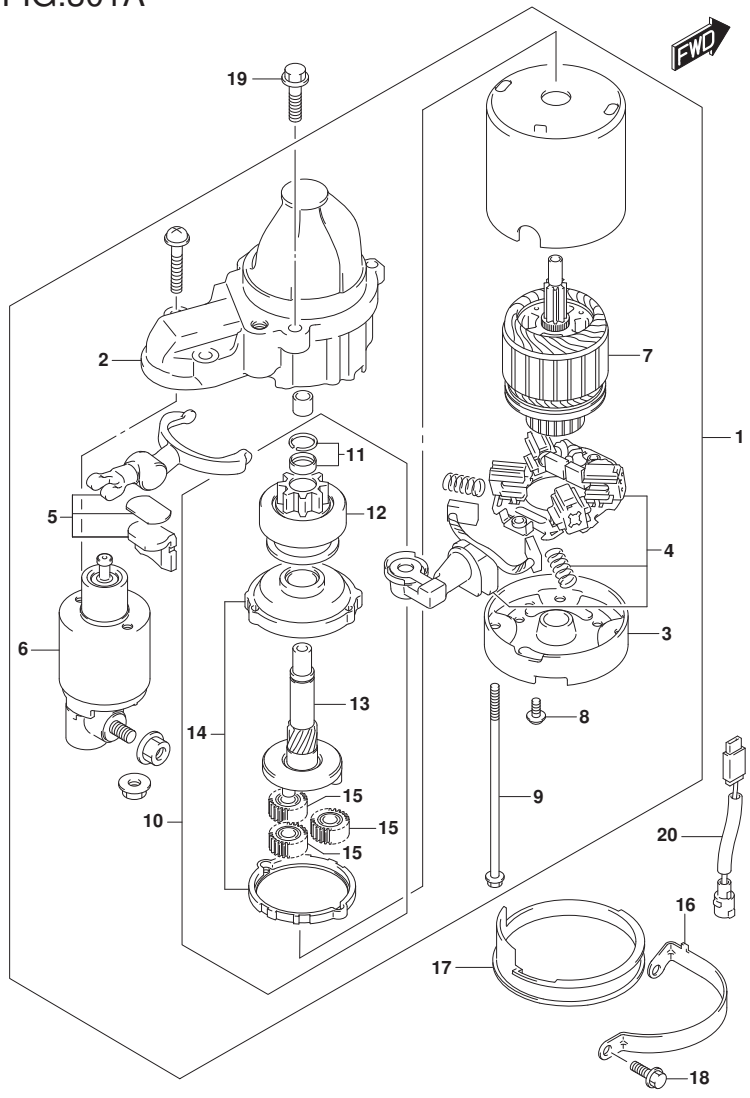

FIG.301A (1-F-15) STARTING MOTOR

REF NO.	PART NO.	DESCRIPTION	Q'TY	REMARKS
1	31100-98L10	STARTING MOTOR	1	
2	31150-98L00	.CASE, GEAR	1	
3	31170-92J00	.HOUSING, REAR	1	
4	31173-98L00	.HOLDER ASSY, BRUSH	1	
5	31191-63J00	.LEVER ASSY	1	
6	31220-98L10	.SWITCH ASSY	1	
7	31311-63J00	.ARMATURE	1	
8	31192-92J00	.SCREW SET	1	
9	31261-75F10	.BOLT, THROUGH	2	
10	31340-98L00	.CLUTCH SET, STARTER	1	
11	31313-86030	..STOPPER SET	1	
12	31320-98L00	..PINION	1	
13	31341-98L00	..SHAFT, PINION	1	
14	31343-63J00	..INTERNAL GEAR	1	
15	31344-63J00	..GEAR ASSY	3	
16	31912-87L00	BAND, STARTING MOTOR	1	
17	31918-92J01	DAMPER, LOWER	1	
18	01550-0616C	BOLT	1	
19	01550-08207	BOLT	1	
20	01550-0835C	BOLT	2	

DF90A_E01_020_301A
STARTING MOTOR

FIG.303A

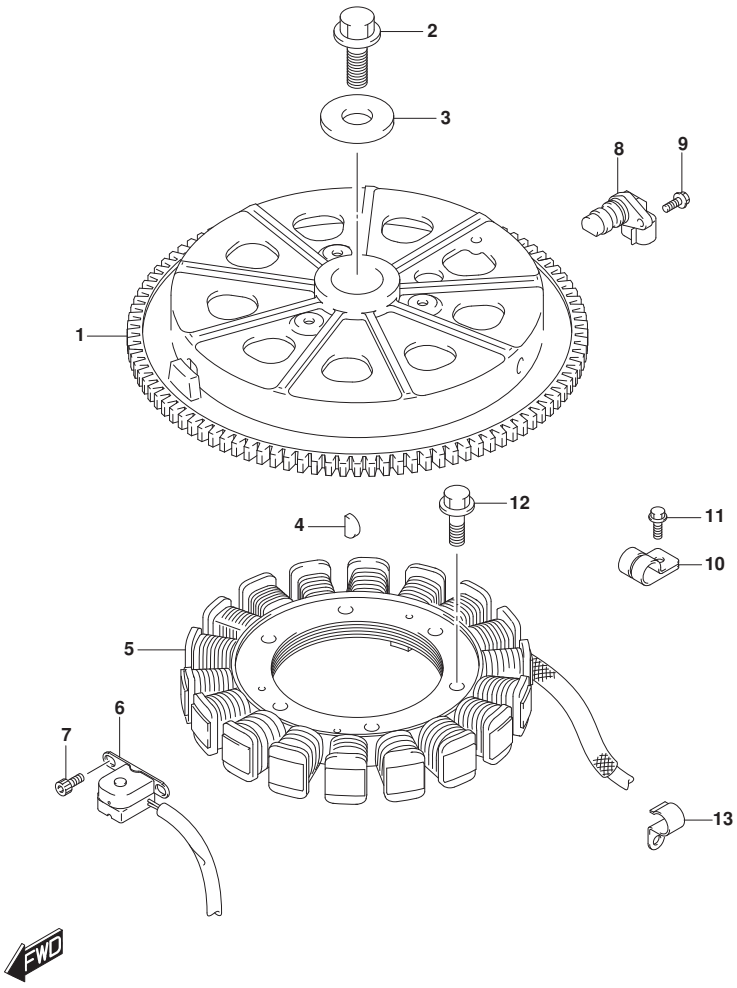

FIG.303A (1-G-2) MAGNETO

REF NO.	PART NO.	DESCRIPTION	Q'TY	REMARKS
1	32102-87L00	FLYWHEEL	1	
2	09103-16004	BOLT (16X50)	1	
3	09160-16047	WASHER (16.5X48.5X4.5)	1	
4	09420-04008	KEY	1	
5	32120-87L10	COIL, BATTERY CHARGING	1	
6	32160-87L00	COIL, IGNITION TIMING	1	
7	09106-05030	BOLT (5X10)	2	
8	33220-64L10	SENSOR ASSY, CAM POSITION	1	
9	01550-0616C	BOLT	1	
10	09403-13414	CLAMP	2	
11	01550-0612C	BOLT	2	
12	09103-06211	BOLT (6X25)	3	
13	09403-20310	CLAMP	1	

FIG.310A

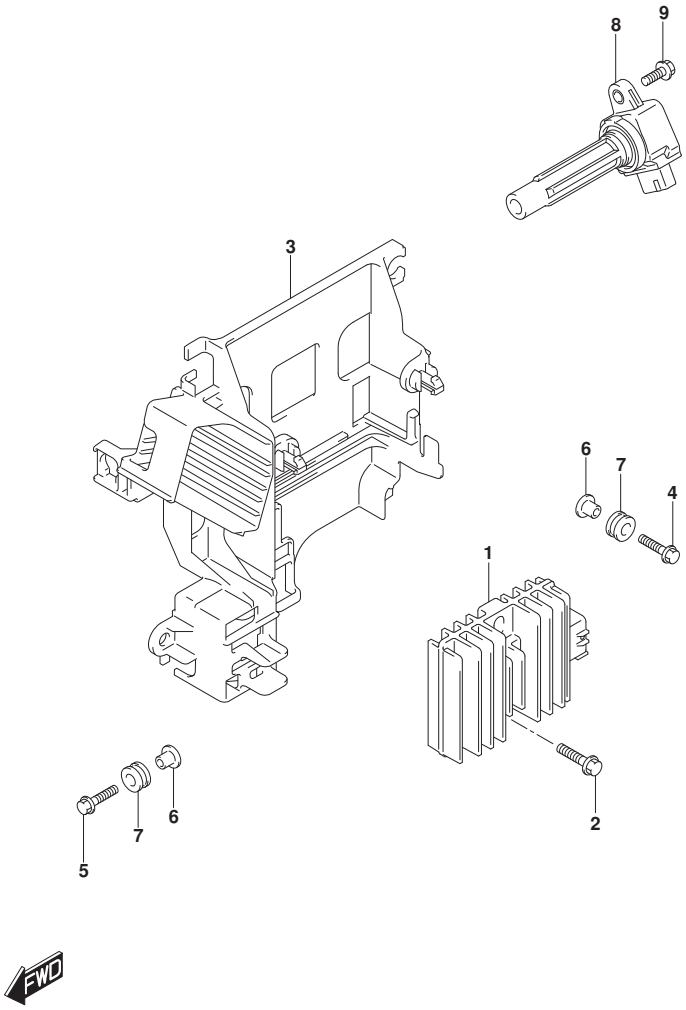

FIG.310A (1-G-3) RECTIFIER/IGNITION COIL

REF NO.	PART NO.	DESCRIPTION	Q'TY	REMARKS
1	32800-87L00	RECTIFIER/REGULATOR ASSY	1	
2	01550-0625C	BOLT	2	
3	32890-87L10	HOLDER, ELECTRIC PARTS	1	
4	09116-06202	BOLT (6X25)	2	
5	01550-0625C	BOLT	1	
6	09169-06062	WASHER	3	
7	09320-09016	CUSHION	3	
8	33410-87L00	COIL ASSY, IGNITION	4	
9	01550-0620C	BOLT	4	

FIG.315A

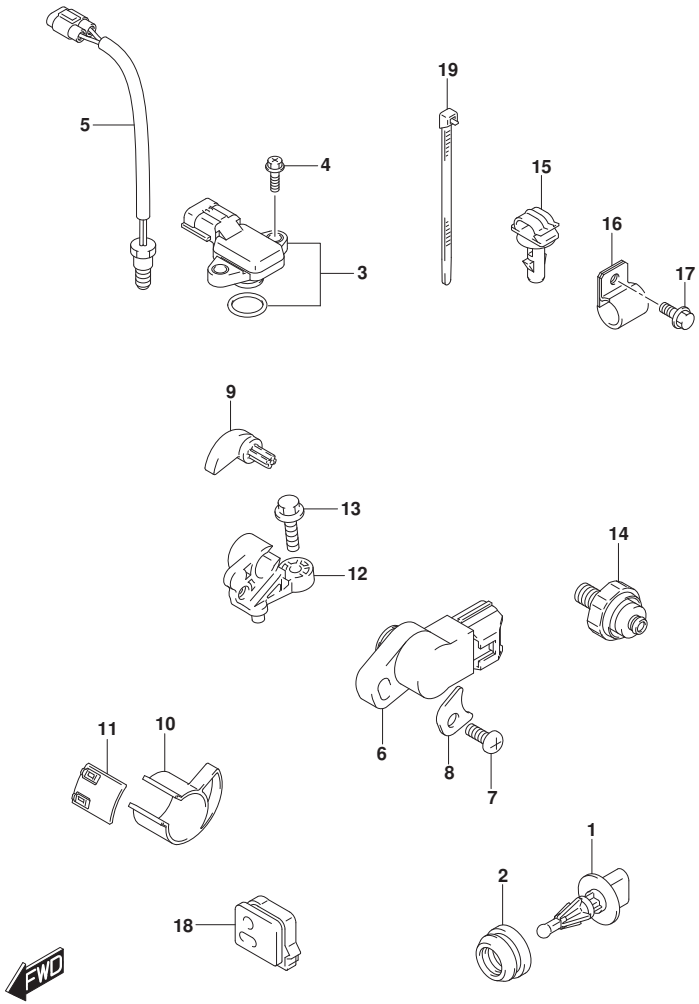

FIG.315A (1-G-4) SENSOR (DF70A)(DF70ATH)(DF80A)(DF90A)(DF90ATH)

REF NO.	PART NO.	DESCRIPTION	Q'TY	REMARKS
1	13650-52G00	SENSOR, INLET AIR TEMP	1	
2	13655-87J01	GROMMET, AIR TEMP SENSOR	1	
3	18590-68H00	SENSOR, PRESSURE	1	
4	02162-05207	SCREW	2	
5	34830-87J20	SENSOR ASSY	1	FOR CYLINDER TEMP
6	34840-98J11	SENSOR ASSY, TRIM	1	
7	09125-05046	SCREW (5X12)	1	
8	34846-87L00	WASHER (5.5X12X0.8)	1	
9	34841-87L10	LEVER, TRIM SENSOR	1	
10	34842-87L01	CAM, TRIM SENSOR UPPER	1	
11	34843-87L00	CAM, TRIM SENSOR LOWER	1	
12	34845-87L10	BRACKET, TRIM SENSOR	1	
13	09103-06093	BOLT (6X20)	1	
14	37820-99E02	SWITCH, OIL PRESSURE	1	
15	09403-07338	CLAMP	1	
16	09403-13413	CLAMP	1	
17	29103-93J00	BOLT, PTT CABLE CLAMP	1	
18	36656-87L00	GROMMET, PTT CABLE	1	
19	09407-14407	CLAMP (L:145)	2	

DF70A E01
DF70A E40
DF70ATH E01
DF70ATH E40
DF80A E01
DF80A E40
DF90A E01

DF90A_E01_020_315A
SENSOR

FIG.315B

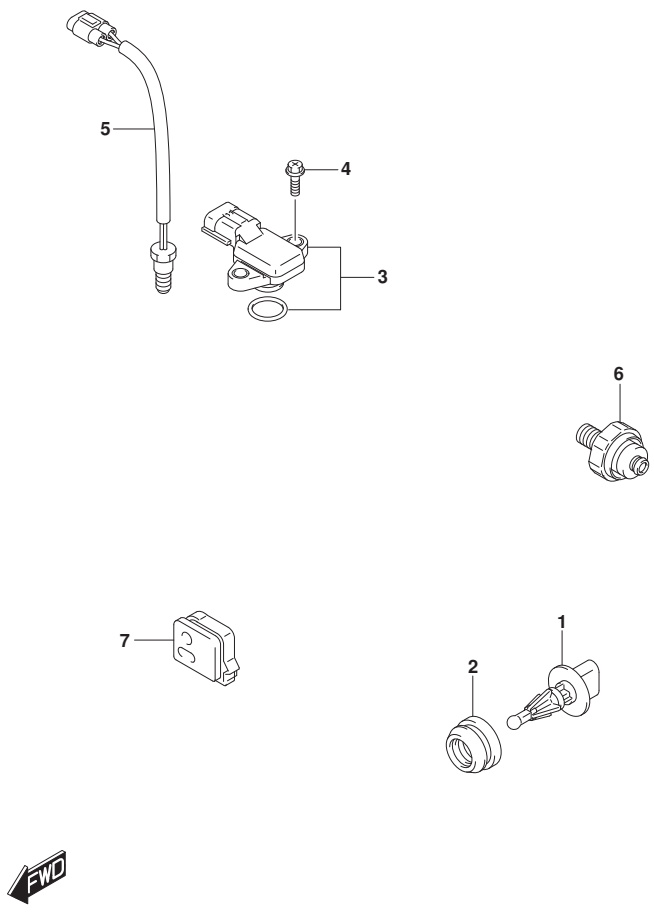

FIG.315B (1-G-5) SENSOR (DF90AWQH)

REF NO.	PART NO.	DESCRIPTION	Q'TY	REMARKS
1	13650-52G00	SENSOR, INLET AIR TEMP	1	
2	13655-87J01	GROMMET, AIR TEMP SENSOR	1	
3	18590-68H00	SENSOR, PRESSURE	1	
4	02162-05207	SCREW	2	
5	34830-87J20	SENSOR ASSY	1	FOR CYLINDER TEMP
6	37820-99E02	SWITCH, OIL PRESSURE	1	
7	36656-87L10	GROMMET, PTT CABLE	1	

DF90AWQH E40

FIG.315C

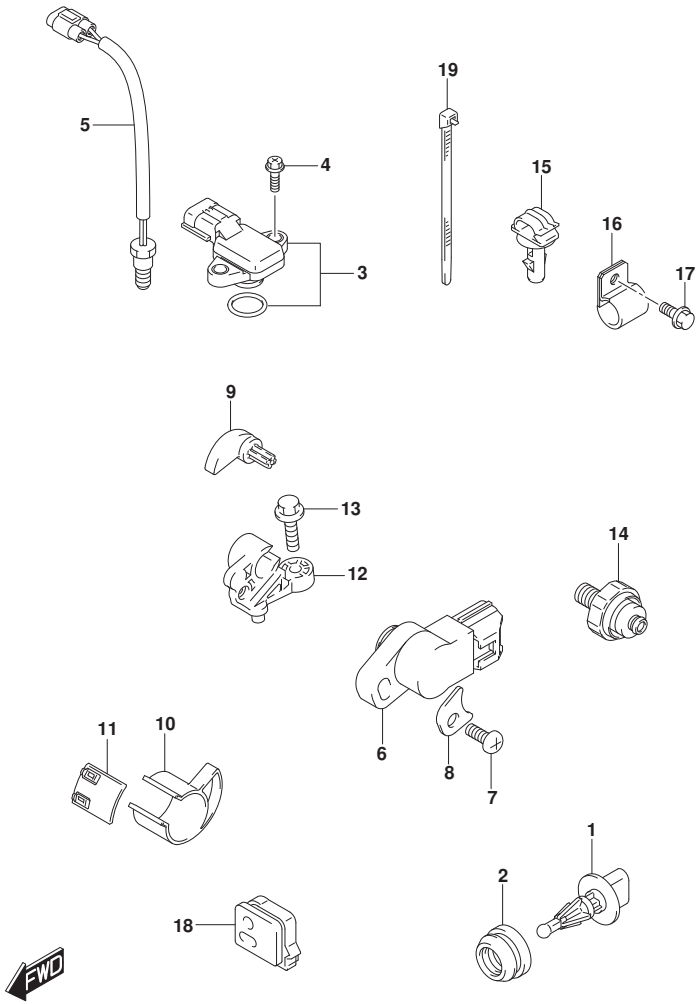

FIG.315C (1-G-6) SENSOR (DF100B)

REF NO.	PART NO.	DESCRIPTION	Q'TY	REMARKS
1	13650-52G00	SENSOR, INLET AIR TEMP	1	
2	13655-87J01	GROMMET, AIR TEMP SENSOR	1	
3	18590-68H00	SENSOR, PRESSURE	1	
4	02162-05207	SCREW	2	
5	34830-87J20	SENSOR ASSY	1	FOR CYLINDER TEMP
6	34840-98J11	SENSOR ASSY, TRIM	1	
7	09125-05046	SCREW (5X12)	1	
8	34846-87L00	WASHER (5.5X12X0.8)	1	
9	34841-87L10	LEVER, TRIM SENSOR	1	
10	34842-87L01	CAM, TRIM SENSOR UPPER	1	
11	34843-87L00	CAM, TRIM SENSOR LOWER	1	
12	34845-87L10	BRACKET, TRIM SENSOR	1	
13	09103-06093	BOLT (6X20)	1	
14	37820-99E02	SWITCH, OIL PRESSURE	1	
15	09403-07338	CLAMP	1	
16	09403-13413	CLAMP	1	
17	29103-93J00	BOLT, PTT CABLE CLAMP	1	
18	36656-87L00	GROMMET, PTT CABLE	1	
19	09407-14407	CLAMP (L:145)	2	

DF100B E01
DF100B E40

DF90A_E01_020_315C
SENSOR

FIG.322A

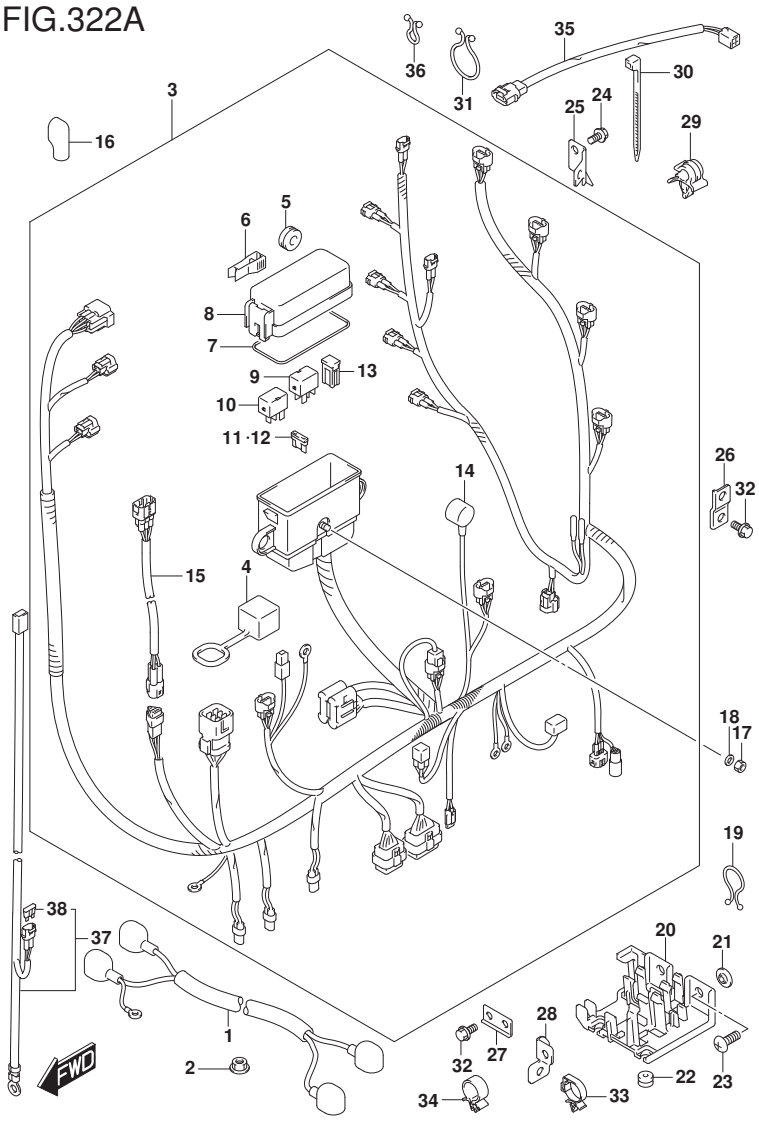

FIG.322A (1-G-7) HARNESS (DF70A)(DF70ATH)(DF80A)(DF90A)(DF90ATH)

REF NO.	PART NO.	DESCRIPTION	Q'TY	REMARKS
1	33810-90J21	CABLE, STARTER MOTOR	1	
2	08316-10087	NUT	1	
3	36610-87L90	HARNESS ASSY, WIRING	1	
4	33634-96J00	.CAP, SERVICE CONNECTOR	1	
5	09320-08510	.CUSHION	2	
6	36737-98L00	.PULLER, FUSE	1	
7	36721-98L00	.O RING, UPPER COVER	1	
8	36738-98L00	.COVER, FUSE CASE UPPER	1	
9	38860-76F01	.RELAY ASSY	1	ENGINE CONTROL UNIT
10	38860-76F01	.RELAY ASSY	1	STARTER MOTOR
11	09481-10504	.FUSE (10A)	3	
12	09481-30504	.FUSE (30A)	3	
13	09481-40403	.FUSE (40A)	2	
14	36618-43410	.CAP, OIL PRESSURE SWITCH	1	
15	36611-87L10	.HARNESS ASSY, WIRING SUB	1	
16	36612-96J00	CAP, TERMINAL	1	
17	08310-00067	NUT	1	
18	08321-01067	WASHER	1	
19	09408-00021	CLIP (ID:16)	1	
20	36616-87L00	HOLDER, CABLE	1	
21	09169-06053	WASHER	2	

DF90A_E01_020_322A
HARNESS

FIG.322A

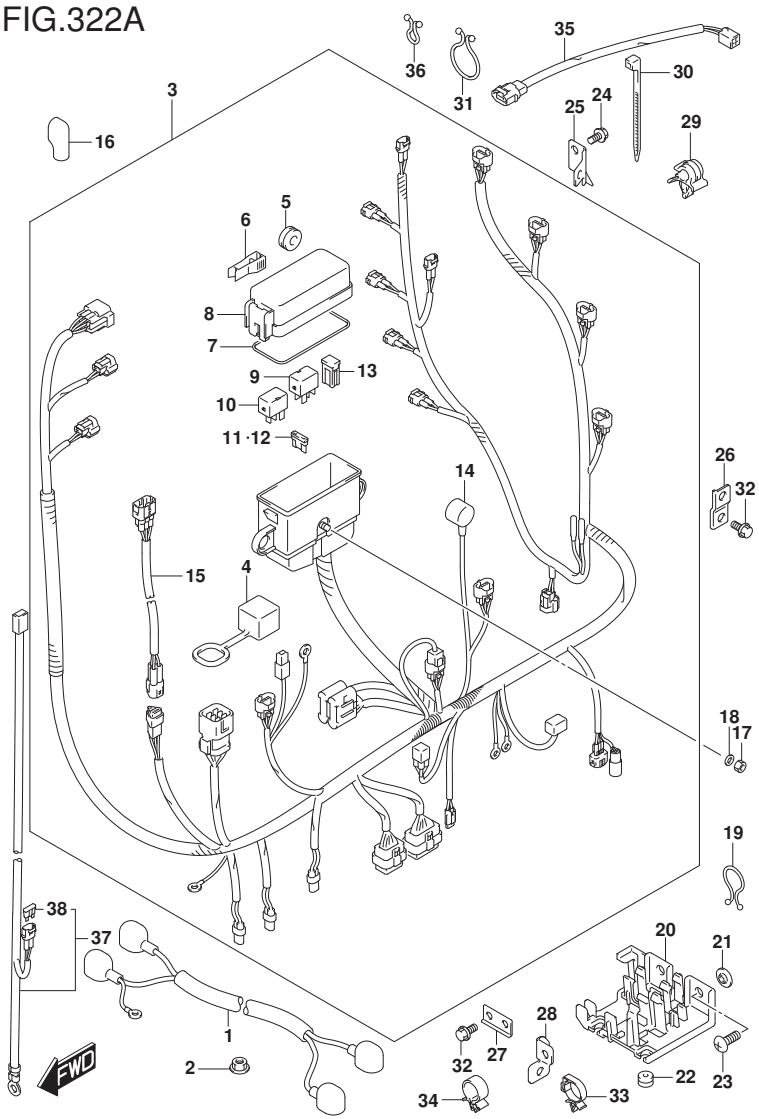

FIG.322A (1-G-8) HARNESS (DF70A)(DF70ATH)(DF80A)(DF90A)(DF90ATH)

REF NO.	PART NO.	DESCRIPTION	Q'TY	REMARKS
22	09320-04013	BUSH	2	
23	02142-06167	SCREW	2	
24	01550-06127	BOLT	1	
25	36617-87L00	CLAMP, HARNESS	1	
26	36617-93J00	BRACKET, HARNESS	1	
27	36617-87L10	CLAMP, HARNESS	1	
28	36617-87L20	CLAMP, HARNESS	1	
29	09403-07308	CLAMP	1	
30	09407-14407	CLAMP (L:145)	1	
31	09408-00024	CLIP (ID:23)	1	
32	01550-0612C	BOLT	2	
33	09403-11321	CLAMP	1	
34	09403-12409	CLAMP	1	
35	36611-87L00	HARNESS ASSY, WIRING SUB	1	
36	09408-00020	CLIP	1	
37	36625-93J10	LEAD, BATTERY (L:6500)	1	OPT
38	09481-15501	.FUSE (15A)	1	OPT

DF70A E01
DF70A E40
DF70ATH E01
DF70ATH E40
DF80A E01
DF80A E40
DF90A E01
DF90A E40
DF90ATH E01
DF90ATH E40

DF90A_E01_020_322A
HARNESS

FIG.322B

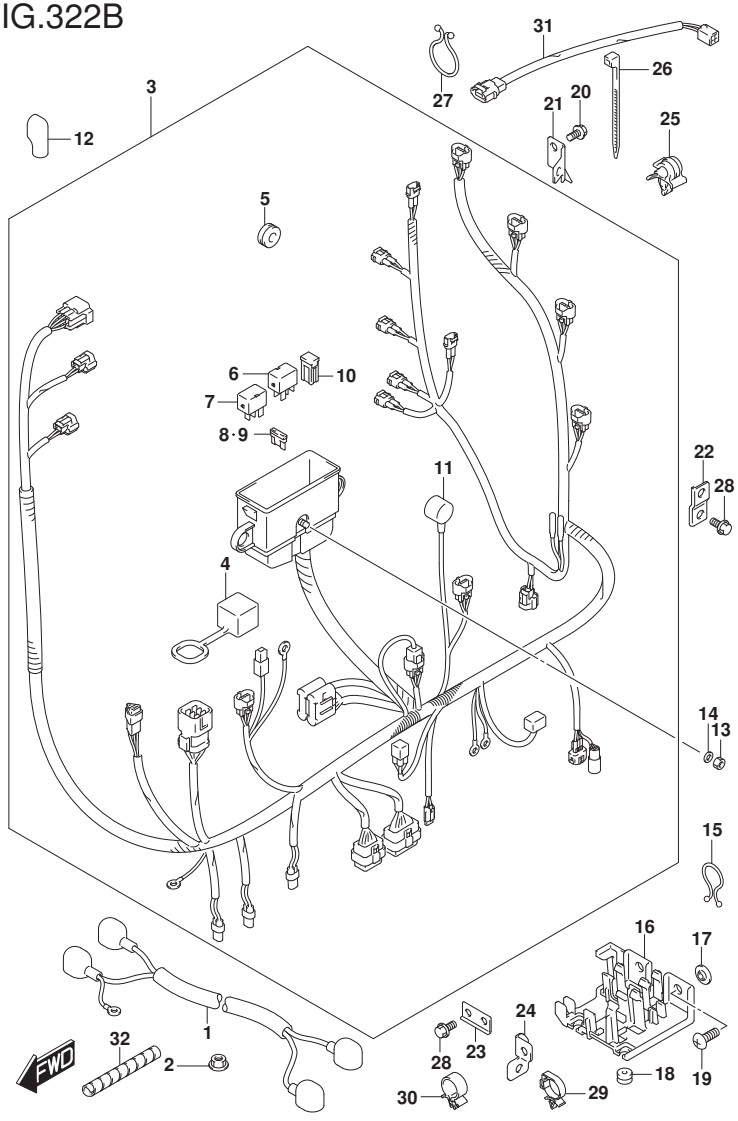

FIG.322B (1-G-9) HARNESS (DF90AWQH)

REF NO.	PART NO.	DESCRIPTION	Q'TY	REMARKS
1	33810-90J21	CABLE, STARTER MOTOR	1	
2	08316-10087	NUT	1	
3	36610-87LB1	HARNESS ASSY, WIRING	1	
4	33634-96J00	.CAP, SERVICE CONNECTOR	1	
5	09320-08510	.CUSHION	2	
6	38860-76F01	.RELAY ASSY	1	ENGINE CONTROL UNIT
7	38860-76F01	.RELAY ASSY	1	STARTER MOTOR
8	09481-10504	.FUSE (10A)	3	
9	09481-30504	.FUSE (30A)	3	
10	09481-40403	.FUSE (40A)	2	
11	36618-43410	.CAP, OIL PRESSURE SWITCH	1	
12	36612-96J00	CAP, TERMINAL	1	
13	08310-00067	NUT	1	
14	08321-01067	WASHER	1	
15	09408-00021	CLIP (ID:16)	1	
16	36616-87L00	HOLDER, CABLE	1	
17	09169-06053	WASHER	2	
18	09320-04013	BUSH	2	
19	02142-06167	SCREW	2	
20	01550-06127	BOLT	1	
21	36617-87L00	CLAMP, HARNESS	1	
22	36617-93J00	BRACKET, HARNESS	1	
23	36617-87L10	CLAMP, HARNESS	1	
24	36617-87L20	CLAMP, HARNESS	1	
25	09403-07308	CLAMP	1	

DF90A_E01_020_322B
HARNESS

FIG.322B

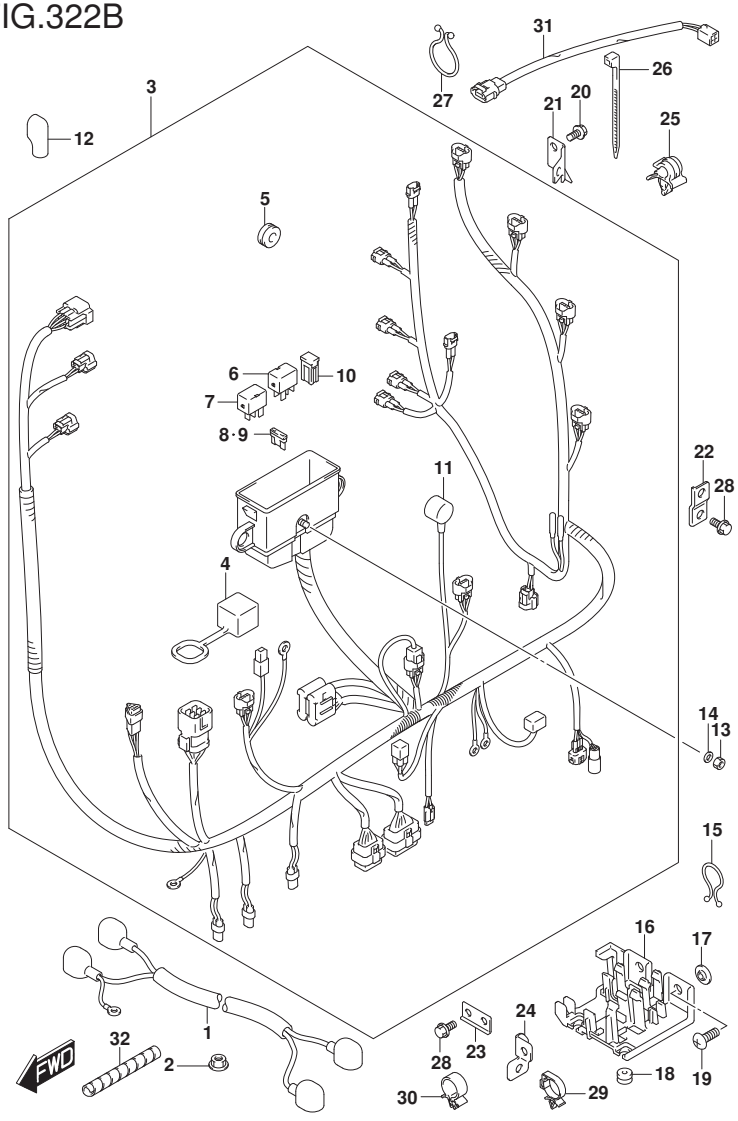

FIG.322B (1-G-10) HARNESS (DF90AWQH)

REF NO.	PART NO.	DESCRIPTION	Q'TY	REMARKS
26	09407-14407	CLAMP (L:145)	1	
27	09408-00024	CLIP (ID:23)	1	
28	01550-0612C	BOLT	2	
29	09403-11321	CLAMP	1	
30	09403-12409	CLAMP	1	
31	36611-87L00	HARNESS ASSY, WIRING SUB	1	
32	33833-87L00	TUBE, SPIRAL	1	

DF90AWQH E40

DF90A_E01_020_322B
HARNESS

FIG.322C

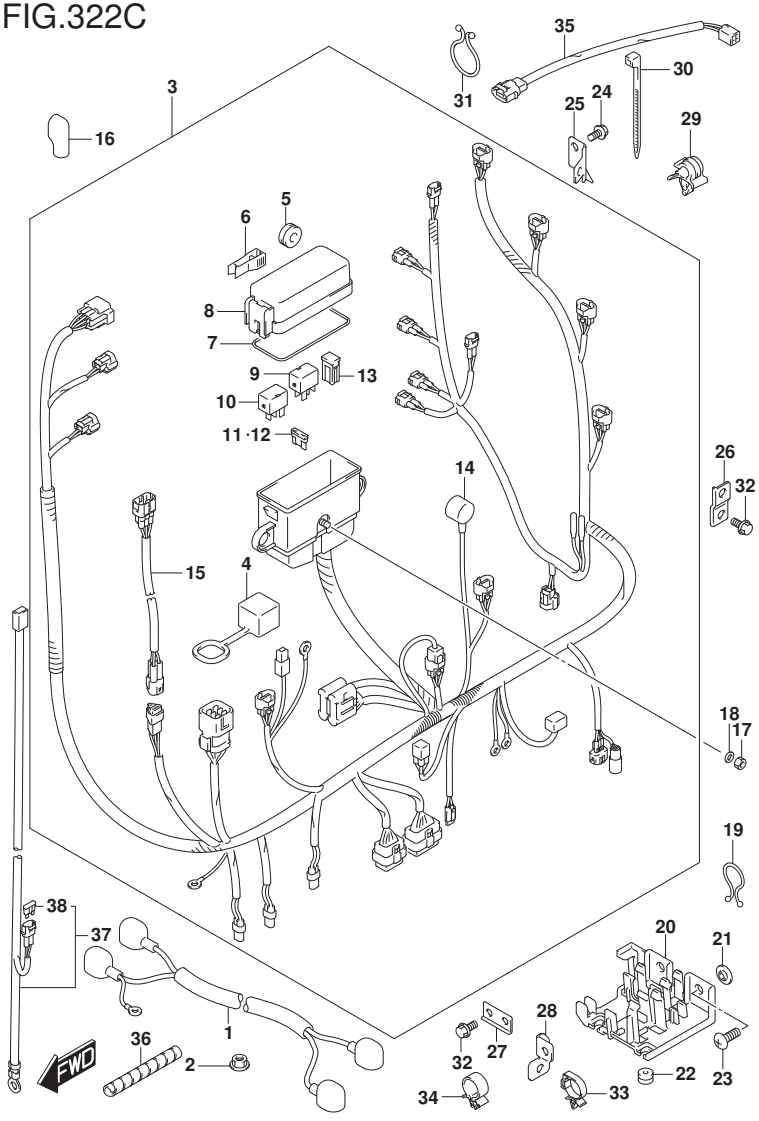

FIG.322C (1-G-11) HARNESS (DF100B)

REF NO.	PART NO.	DESCRIPTION	Q'TY	REMARKS
1	33810-90J21	CABLE, STARTER MOTOR	1	
2	08316-10087	NUT	1	
3	36610-87LA0	HARNESS ASSY, WIRING	1	
4	33634-96J00	.CAP, SERVICE CONNECTOR	1	
5	09320-08510	.CUSHION	2	
6	36737-98L00	.PULLER, FUSE	1	
7	36721-98L00	.O RING, UPPER COVER	1	
8	36738-98L00	.COVER, FUSE CASE UPPER	1	
9	38860-76F01	.RELAY ASSY	1	ENGINE CONTROL UNIT
10	38860-76F01	.RELAY ASSY	1	STARTER MOTOR
11	09481-10504	.FUSE (10A)	3	
12	09481-30504	.FUSE (30A)	3	
13	09481-40403	.FUSE (40A)	2	
14	36618-43410	.CAP, OIL PRESSURE SWITCH	1	
15	36611-87L10	.HARNESS ASSY, WIRING SUB	1	
16	36612-96J00	CAP, TERMINAL	1	
17	08310-00067	NUT	1	
18	08321-01067	WASHER	1	
19	09408-00021	CLIP (ID:16)	1	
20	36616-87L00	HOLDER, CABLE	1	
21	09169-06053	WASHER	2	
22	09320-04013	BUSH	2	
23	02142-06167	SCREW	2	
24	01550-06127	BOLT	1	
25	36617-87L00	CLAMP, HARNESS	1	
26	36617-93J00	BRACKET, HARNESS	1	
27	36617-87L10	CLAMP, HARNESS	1	
28	36617-87L20	CLAMP, HARNESS	1	
29	09403-07308	CLAMP	1	

FIG.322C

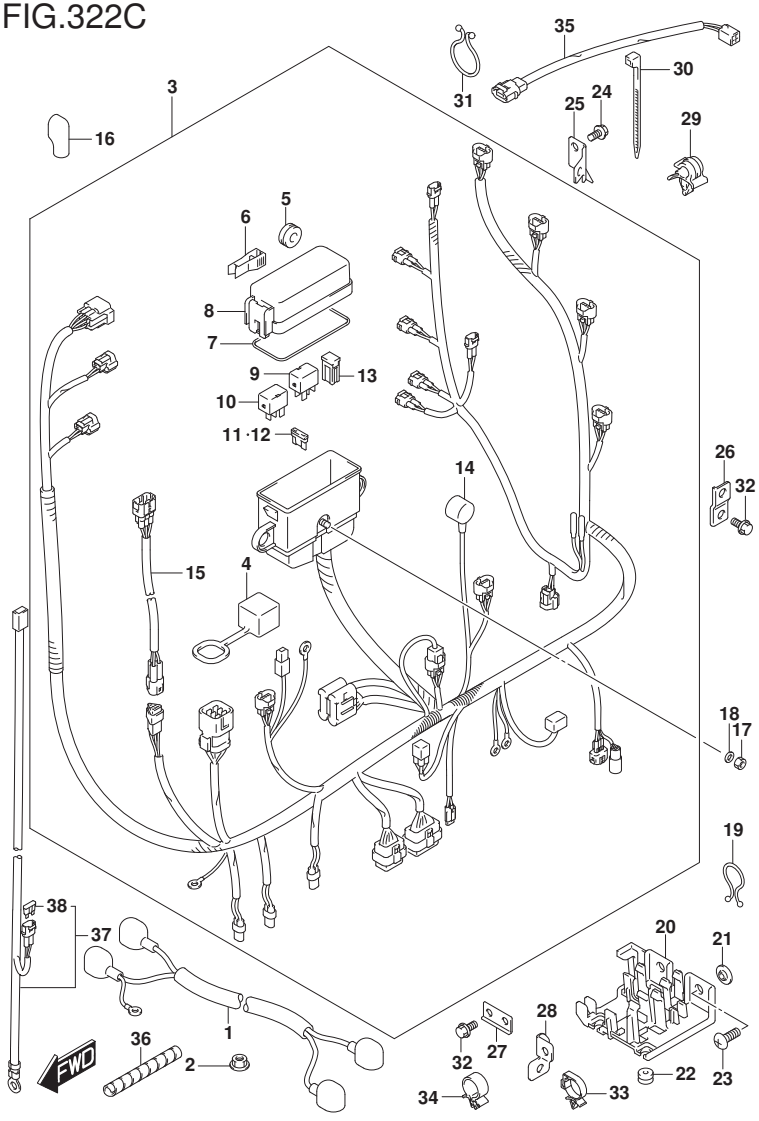

FIG.322C (1-G-12) HARNESS (DF100B)

REF NO.	PART NO.	DESCRIPTION	Q'TY	REMARKS
30	09407-14407	CLAMP (L:145)	1	
31	09408-00024	CLIP (ID:23)	1	
32	01550-0612C	BOLT	2	
33	09403-11321	CLAMP	1	
34	09403-12409	CLAMP	1	
35	36611-87L00	HARNESS ASSY, WIRING SUB	1	
36	33833-87L00	TUBE, SPIRAL	1	
37	36625-93J10	LEAD, BATTERY (L:6500)	1	OPT
38	09481-15501	.FUSE (15A)	1	OPT

DF100B E01
DF100B E40

DF90A_E01_020_322C
HARNESS

FIG.326A

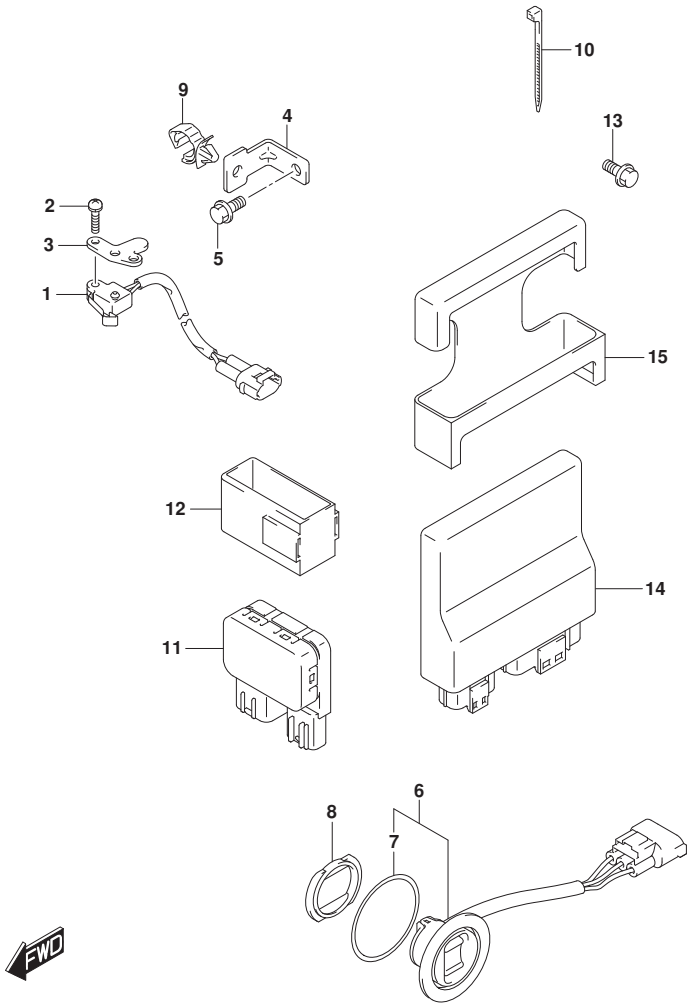

FIG.326A (1-G-13) PTT SWITCH/ENGINE CONTROL UNIT (DF70A E01)(DF70ATH E01)

REF NO.	PART NO.	DESCRIPTION	Q'TY	REMARKS
1	37721-93J00	SWITCH ASSY, NEUTRAL	1	
2	09137-04004	SCREW (4X16)	2	
3	37726-90J10	BRACKET, NEUTRAL SWITCH	1	
4	37726-87L00	BRACKET, SWITCH LEAD CLAMP	1	
5	01550-0612C	BOLT	1	
6	37850-92J00	SWITCH ASSY, PTT	1	
7	37856-92J00	.TAPE, PTT SWITCH	1	
8	37857-92J01	BUSH, PTT SWITCH	1	
9	09403-11321	CLAMP	1	
10	09407-10404	CLAMP (L:100)	1	
11	38410-93J21	RELAY ASSY, PTT	1	
12	38415-93J20	HOLDER, PTT RELAY	1	
13	01550-06127	BOLT	1	
14	33940-87LL0	UNIT, ENGINE CONTROL	1	
15	33925-92J00	CUSHION, ENGINE CONTROL UNIT	1	

DF70A E01
DF70ATH E01

DF90A_E01_020_326A
PTT SWITCH/ENGINE CONTROL UNIT

FIG.326B

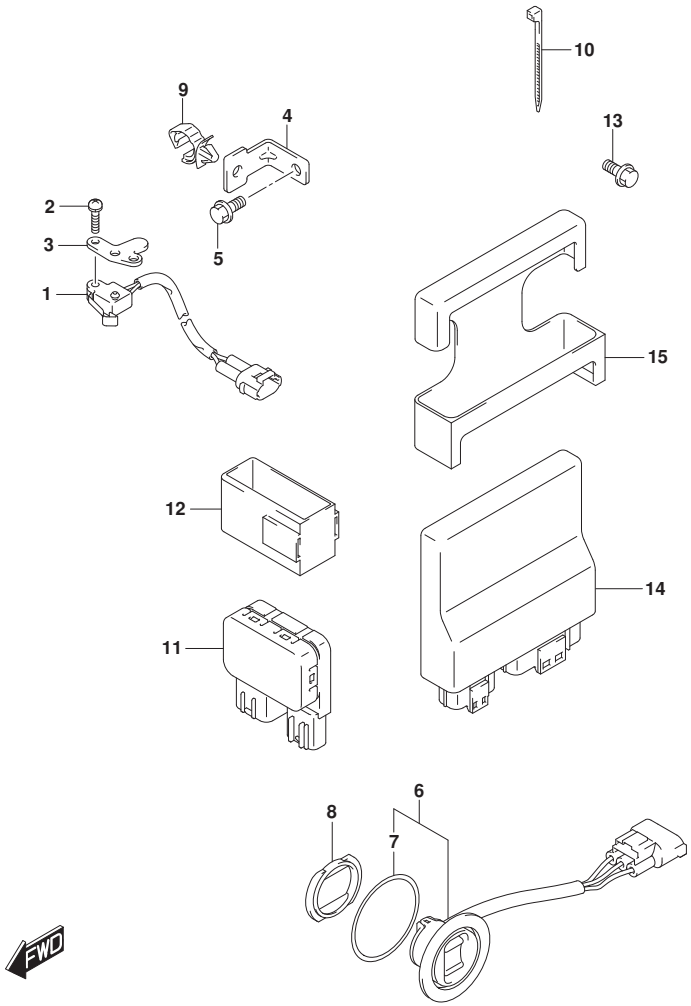

FIG.326B (1-G-14) PTT SWITCH/ENGINE CONTROL UNIT (DF70A E40)(DF70ATH E40)

REF NO.	PART NO.	DESCRIPTION	Q'TY	REMARKS
1	37721-93J00	SWITCH ASSY, NEUTRAL	1	
2	09137-04004	SCREW (4X16)	2	
3	37726-90J10	BRACKET, NEUTRAL SWITCH	1	
4	37726-87L00	BRACKET, SWITCH LEAD CLAMP	1	
5	01550-0612C	BOLT	1	
6	37850-92J00	SWITCH ASSY, PTT	1	
7	37856-92J00	.TAPE, PTT SWITCH	1	
8	37857-92J01	BUSH, PTT SWITCH	1	
9	09403-11321	CLAMP	1	
10	09407-10404	CLAMP (L:100)	1	
11	38410-93J21	RELAY ASSY, PTT	1	
12	38415-93J20	HOLDER, PTT RELAY	1	
13	01550-06127	BOLT	1	
14	33940-87LM0	UNIT, ENGINE CONTROL	1	
15	33925-92J00	CUSHION, ENGINE CONTROL UNIT	1	

DF70A E40
DF70ATH E40

DF90A_E01_020_326B
PTT SWITCH/ENGINE CONTROL UNIT

FIG.326C

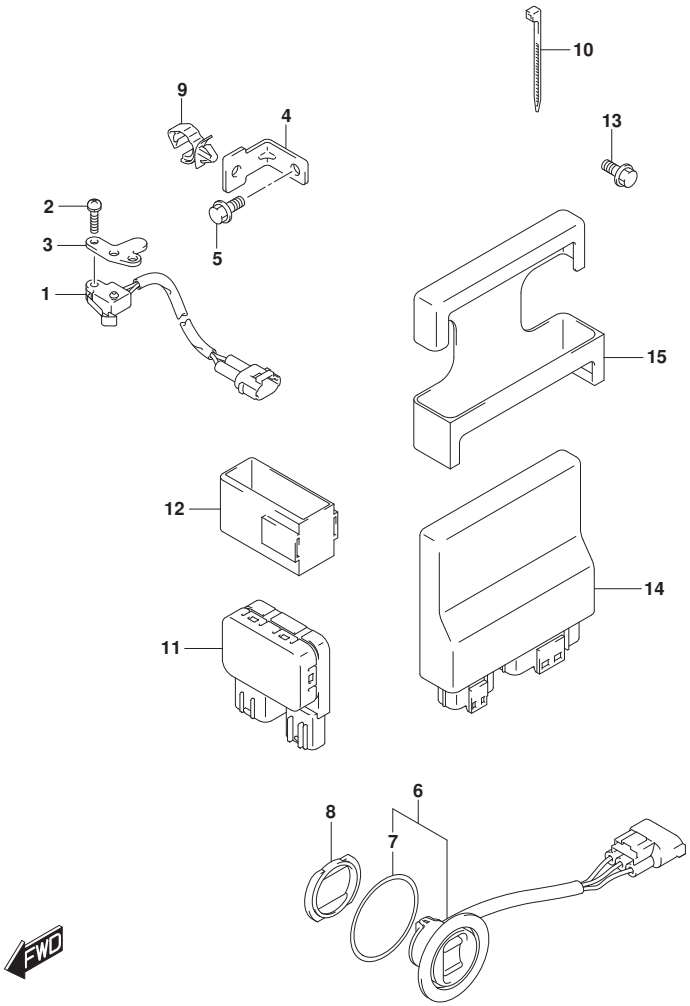

FIG.326C (1-G-15) PTT SWITCH/ENGINE CONTROL UNIT (DF80A E01)

REF NO.	PART NO.	DESCRIPTION	Q'TY	REMARKS
1	37721-93J00	SWITCH ASSY, NEUTRAL	1	
2	09137-04004	SCREW (4X16)	2	
3	37726-90J10	BRACKET, NEUTRAL SWITCH	1	
4	37726-87L00	BRACKET, SWITCH LEAD CLAMP	1	
5	01550-0612C	BOLT	1	
6	37850-92J00	SWITCH ASSY, PTT	1	
7	37856-92J00	.TAPE, PTT SWITCH	1	
8	37857-92J01	BUSH, PTT SWITCH	1	
9	09403-11321	CLAMP	1	
10	09407-10404	CLAMP (L:100)	1	
11	38410-93J21	RELAY ASSY, PTT	1	
12	38415-93J20	HOLDER, PTT RELAY	1	
13	01550-06127	BOLT	1	
14	33940-87LG0	UNIT, ENGINE CONTROL	1	
15	33925-92J00	CUSHION, ENGINE CONTROL UNIT	1	

DF80A E01

DF90A_E01_020_326C
PTT SWITCH/ENGINE CONTROL UNIT

FIG.326D

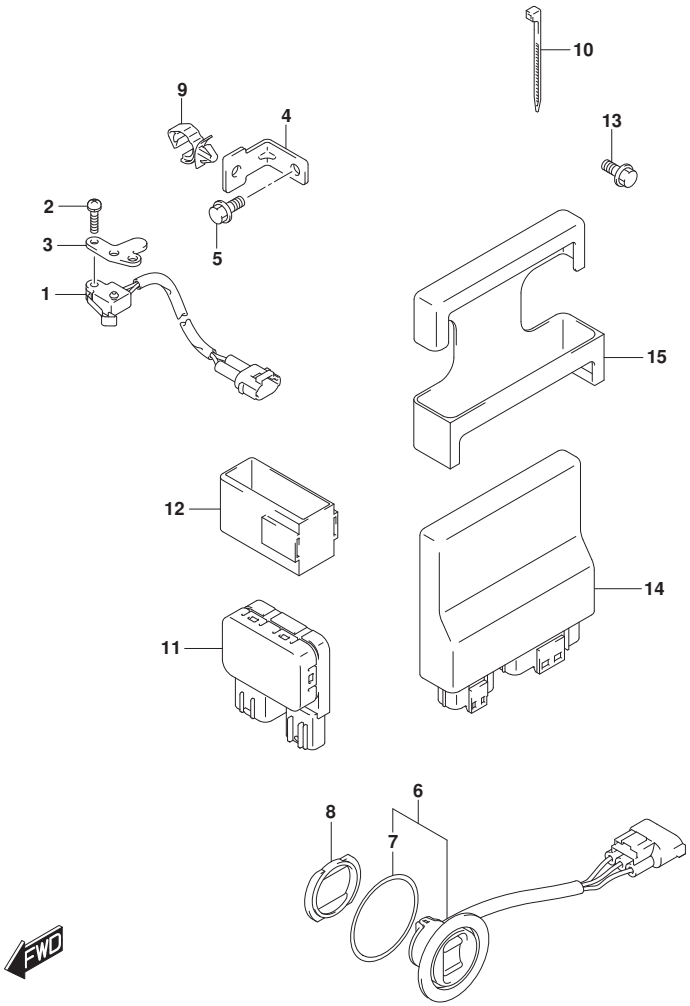

FIG.326D (1-H-2) PTT SWITCH/ENGINE CONTROL UNIT (DF80A E40)

REF NO.	PART NO.	DESCRIPTION	Q'TY	REMARKS
1	37721-93J00	SWITCH ASSY, NEUTRAL	1	
2	09137-04004	SCREW (4X16)	2	
3	37726-90J10	BRACKET, NEUTRAL SWITCH	1	
4	37726-87L00	BRACKET, SWITCH LEAD CLAMP	1	
5	01550-0612C	BOLT	1	
6	37850-92J00	SWITCH ASSY, PTT	1	
7	37856-92J00	.TAPE, PTT SWITCH	1	
8	37857-92J01	BUSH, PTT SWITCH	1	
9	09403-11321	CLAMP	1	
10	09407-10404	CLAMP (L:100)	1	
11	38410-93J21	RELAY ASSY, PTT	1	
12	38415-93J20	HOLDER, PTT RELAY	1	
13	01550-06127	BOLT	1	
14	33940-87LH0	UNIT, ENGINE CONTROL	1	
15	33925-92J00	CUSHION, ENGINE CONTROL UNIT	1	

DF80A E40

DF90A_E01_020_326D
PTT SWITCH/ENGINE CONTROL UNIT

FIG.326E

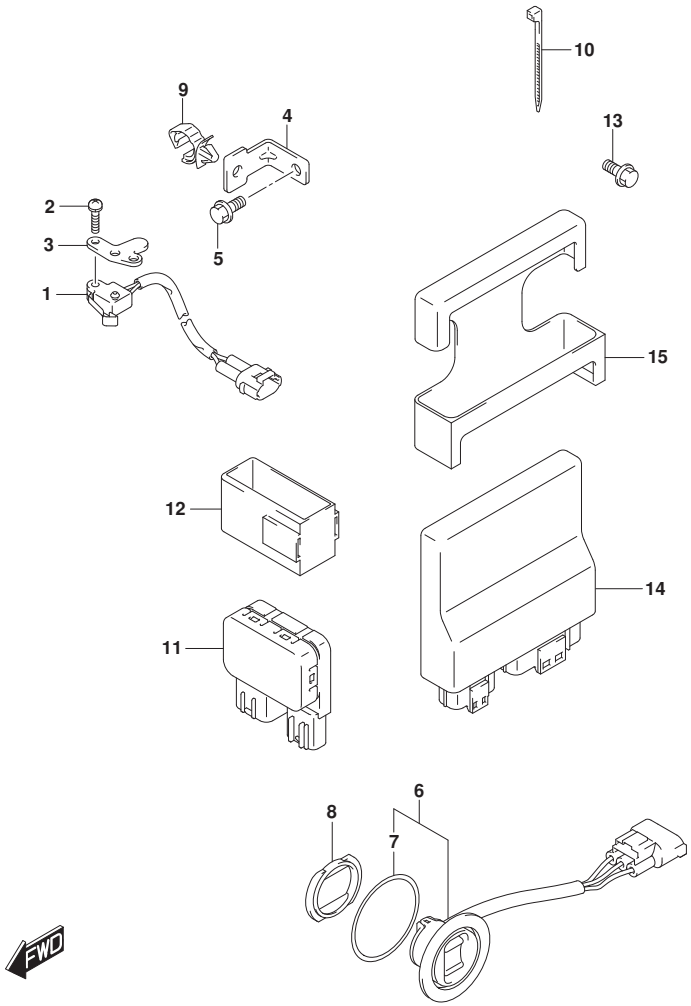

FIG.326E (1-H-3) PTT SWITCH/ENGINE CONTROL UNIT (DF90A E01)(DF90ATH E01)

REF NO.	PART NO.	DESCRIPTION	Q'TY	REMARKS
1	37721-93J00	SWITCH ASSY, NEUTRAL	1	
2	09137-04004	SCREW (4X16)	2	
3	37726-90J10	BRACKET, NEUTRAL SWITCH	1	
4	37726-87L00	BRACKET, SWITCH LEAD CLAMP	1	
5	01550-0612C	BOLT	1	
6	37850-92J00	SWITCH ASSY, PTT	1	
7	37856-92J00	.TAPE, PTT SWITCH	1	
8	37857-92J01	BUSH, PTT SWITCH	1	
9	09403-11321	CLAMP	1	
10	09407-10404	CLAMP (L:100)	1	
11	38410-93J21	RELAY ASSY, PTT	1	
12	38415-93J20	HOLDER, PTT RELAY	1	
13	01550-06127	BOLT	1	
14	33940-87LQ0	UNIT, ENGINE CONTROL	1	
15	33925-92J00	CUSHION, ENGINE CONTROL UNIT	1	

DF90A E01
DF90ATH E01

DF90A_E01_020_326E
PTT SWITCH/ENGINE CONTROL UNIT

FIG.326F

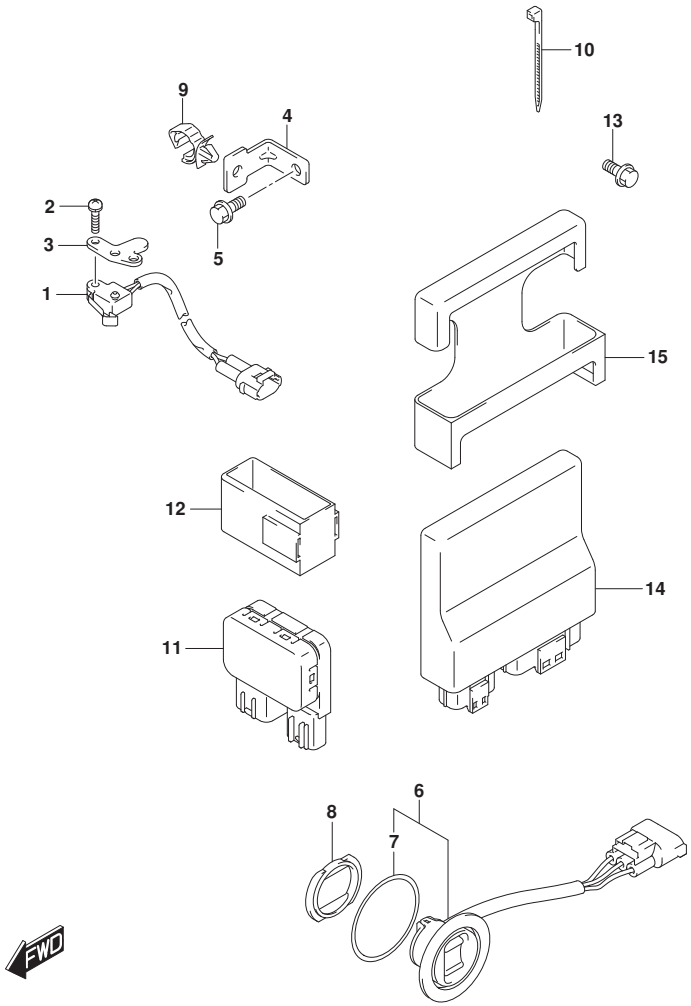

FIG.326F (1-H-4) PTT SWITCH/ENGINE CONTROL UNIT (DF90A E40)(DF90ATH E40)

REF NO.	PART NO.	DESCRIPTION	Q'TY	REMARKS
1	37721-93J00	SWITCH ASSY, NEUTRAL	1	
2	09137-04004	SCREW (4X16)	2	
3	37726-90J10	BRACKET, NEUTRAL SWITCH	1	
4	37726-87L00	BRACKET, SWITCH LEAD CLAMP	1	
5	01550-0612C	BOLT	1	
6	37850-92J00	SWITCH ASSY, PTT	1	
7	37856-92J00	.TAPE, PTT SWITCH	1	
8	37857-92J01	BUSH, PTT SWITCH	1	
9	09403-11321	CLAMP	1	
10	09407-10404	CLAMP (L:100)	1	
11	38410-93J21	RELAY ASSY, PTT	1	
12	38415-93J20	HOLDER, PTT RELAY	1	
13	01550-06127	BOLT	1	
14	33940-87LR0	UNIT, ENGINE CONTROL	1	
15	33925-92J00	CUSHION, ENGINE CONTROL UNIT	1	

DF90A E40
DF90ATH E40

DF90A_E01_020_326F
PTT SWITCH/ENGINE CONTROL UNIT

FIG.326G

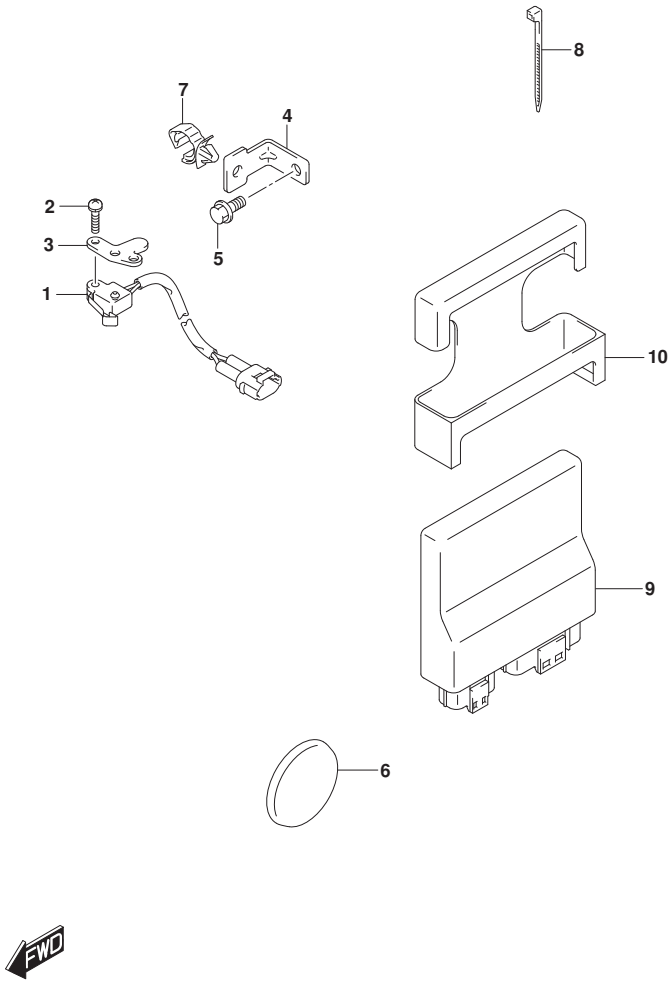

FIG.326G (1-H-5) PTT SWITCH/ENGINE CONTROL UNIT (DF90AWQH E40)

REF NO.	PART NO.	DESCRIPTION	Q'TY	REMARKS
1	37721-93J00	SWITCH ASSY, NEUTRAL	1	
2	09137-04004	SCREW (4X16)	2	
3	37726-90J10	BRACKET, NEUTRAL SWITCH	1	
4	37726-87L00	BRACKET, SWITCH LEAD CLAMP	1	
5	01550-0612C	BOLT	1	
6	09250-40002	CAP(OD:52)	1	
7	09403-11321	CLAMP	1	
8	09407-10404	CLAMP (L:100)	1	
9	33940-87LS0	UNIT, ENGINE CONTROL	1	
10	33925-92J00	CUSHION, ENGINE CONTROL UNIT	1	

DF90AWQH E40

DF90A_E01_020_326G
PTT SWITCH/ENGINE CONTROL UNIT

FIG.326H

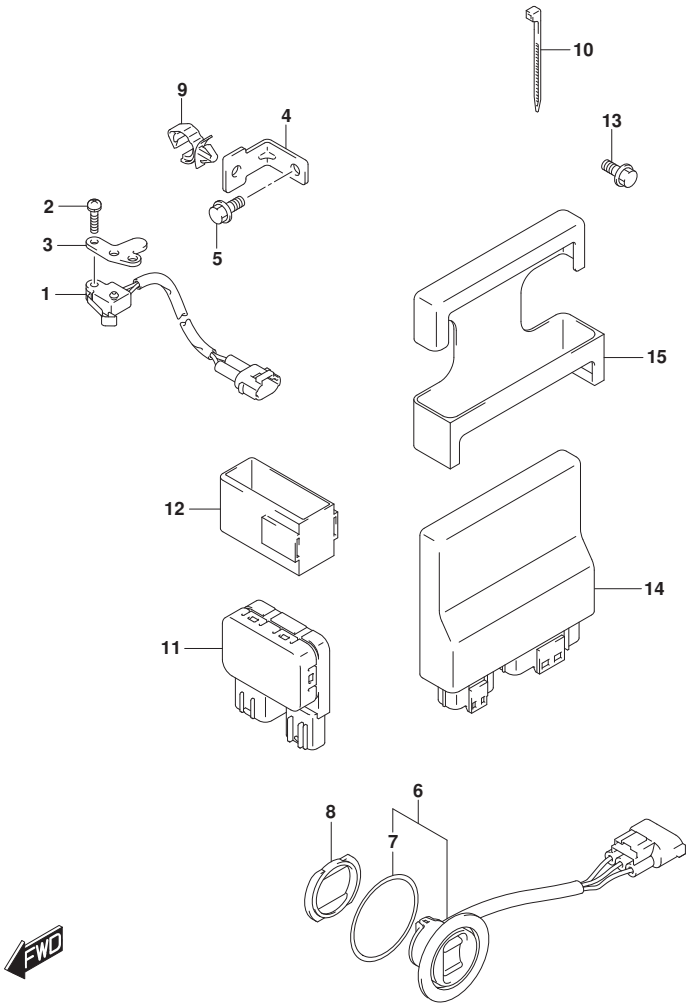

FIG.326H (1-H-6) PTT SWITCH/ENGINE CONTROL UNIT (DF100B E01)

REF NO.	PART NO.	DESCRIPTION	Q'TY	REMARKS
1	37721-93J00	SWITCH ASSY, NEUTRAL	1	
2	09137-04004	SCREW (4X16)	2	
3	37726-90J10	BRACKET, NEUTRAL SWITCH	1	
4	37726-87L00	BRACKET, SWITCH LEAD CLAMP	1	
5	01550-0612C	BOLT	1	
6	37850-92J00	SWITCH ASSY, PTT	1	
7	37856-92J00	.TAPE, PTT SWITCH	1	
8	37857-92J01	BUSH, PTT SWITCH	1	
9	09403-11321	CLAMP	1	
10	09407-10404	CLAMP (L:100)	1	
11	38410-93J21	RELAY ASSY, PTT	1	
12	38415-93J20	HOLDER, PTT RELAY	1	
13	01550-06127	BOLT	1	
14	33940-87LN0	UNIT, ENGINE CONTROL	1	
15	33925-92J00	CUSHION, ENGINE CONTROL UNIT	1	

DF100B E01

DF90A_E01_020_326H
PTT SWITCH/ENGINE CONTROL UNIT

FIG.326J

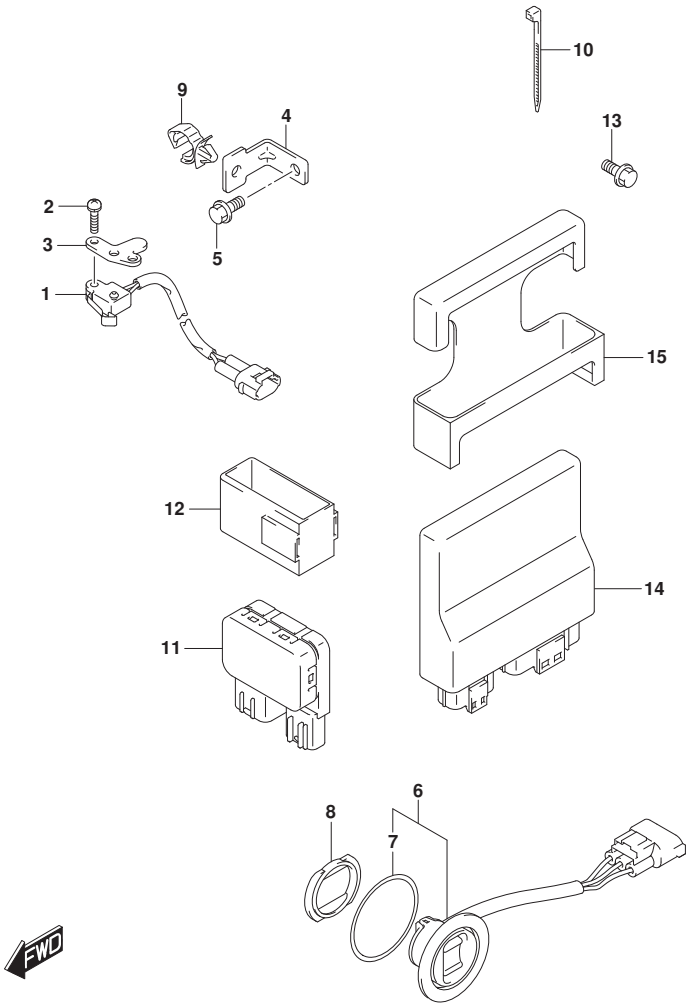

FIG.326J (1-H-7) PTT SWITCH/ENGINE CONTROL UNIT (DF100B E40)

REF NO.	PART NO.	DESCRIPTION	Q'TY	REMARKS
1	37721-93J00	SWITCH ASSY, NEUTRAL	1	
2	09137-04004	SCREW (4X16)	2	
3	37726-90J10	BRACKET, NEUTRAL SWITCH	1	
4	37726-87L00	BRACKET, SWITCH LEAD CLAMP	1	
5	01550-0612C	BOLT	1	
6	37850-92J00	SWITCH ASSY, PTT	1	
7	37856-92J00	.TAPE, PTT SWITCH	1	
8	37857-92J01	BUSH, PTT SWITCH	1	
9	09403-11321	CLAMP	1	
10	09407-10404	CLAMP (L:100)	1	
11	38410-93J21	RELAY ASSY, PTT	1	
12	38415-93J20	HOLDER, PTT RELAY	1	
13	01550-06127	BOLT	1	
14	33940-87LP0	UNIT, ENGINE CONTROL	1	
15	33925-92J00	CUSHION, ENGINE CONTROL UNIT	1	

DF100B E40

DF90A_E01_020_326J
PTT SWITCH/ENGINE CONTROL UNIT

FIG.331A

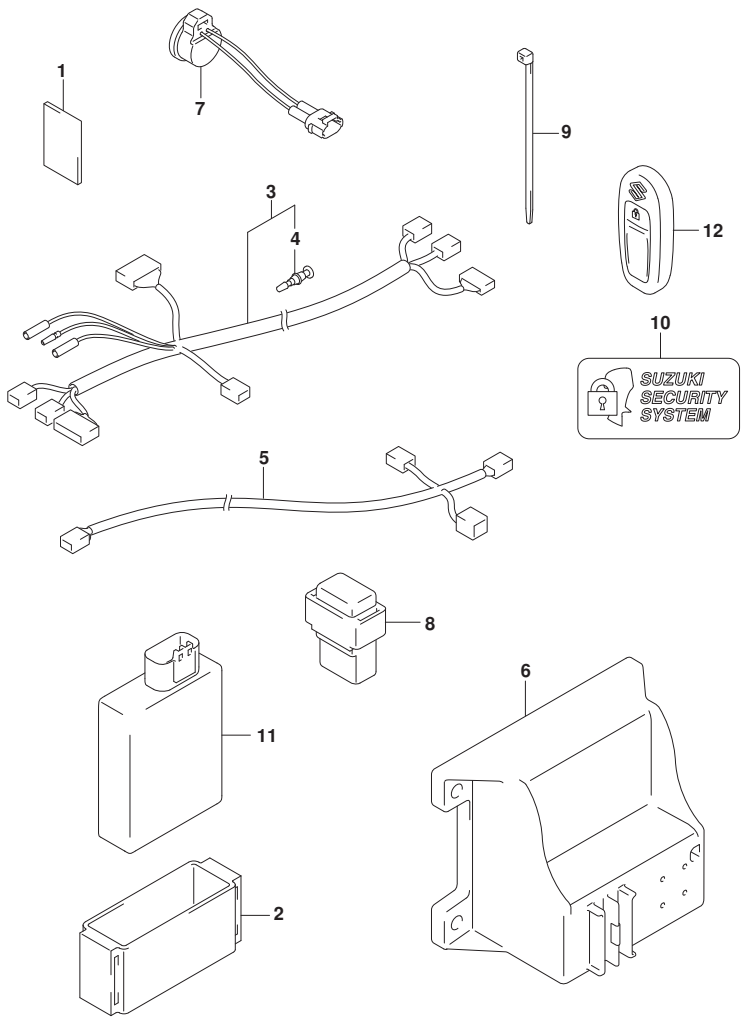

FIG.331A (1-H-8) KEY LESS START (DF70A E01)(DF80A E01)(DF90A E01)(DF100B E01)

REF NO.	PART NO.	DESCRIPTION	Q'TY	REMARKS
1	32851-93J00	CUSHION, LEAD WIRE	1	
2	32980-38F00	HOLDER, KLS CONT	1	
3	36623-96L10	HARNESS ASSY, KLS CONT	1	
4	36615-96300	.TERMINAL, RESIN	1	
5	36662-96L10	HARNESS ASSY, KLS CAN	1	L:6500+2000
6	37173-96L10	HOLDER, KLS PARTS	1	
7	38500-93J90	BUZZER ASSY, KLS	1	
8	38860-96L01	RELAY ASSY, KLS	1	
9	09407-14407	CLAMP (L:145)	1	
10	37117-96L00	DECAL, KLS	2	
11	37171-96L02	CONTROLLER ASSY, KLS 433MHZ	1	
12	37172-96L01	REMOCON ASSY, KLS 433MHZ	2	

DF70A E01
DF80A E01
DF90A E01
DF100B E01

DF90A_E01_020_331A
KEY LESS START

FIG.335A

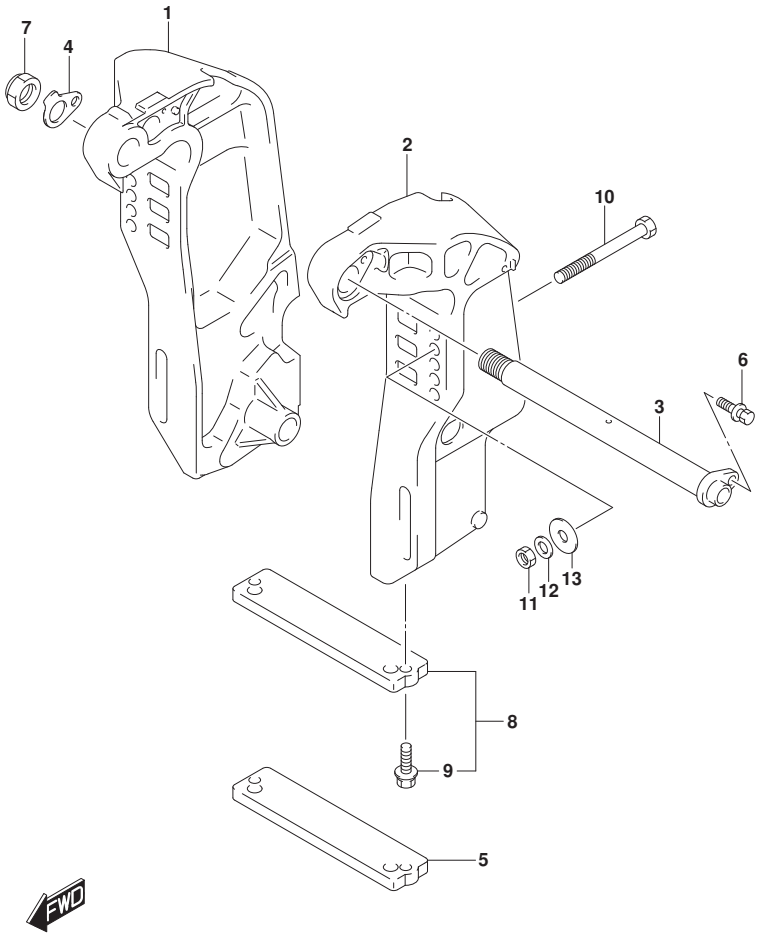

FIG.335A (1-H-9) CLAMP BRACKET (DF70A)(DF90A)(DF100B)

REF NO.	PART NO.	DESCRIPTION	Q'TY	REMARKS
1-1	41111-87L10-YAY	BRACKET, CLAMP STBD (BLACK)	1	
1-2	41111-87L10-Y5S	BRACKET, CLAMP STBD (WHITE)	1	
2-1	41121-87L11-YAY	BRACKET, CLAMP PORT (BLACK)	1	
2-2	41121-87L11-Y5S	BRACKET, CLAMP PORT (WHITE)	1	
3	41130-87L11	SHAFT, CLAMP BRACKET	1	
4	41135-93J11	WASHER, CLAMP BRACKET SHAFT	1	
5	55321-94910	ANODE (MAGNESIUM)	1	OPT
6	09116-08137	BOLT (8X22)	1	
7	09159-22006	NUT	1	
8	55320-94900	ANODE SET, CLAMP BRACKET	1	
9	09116-06121	.BOLT (6X25)	2	
10-1	09100-12091	BOLT (12X115)	4	
10-2	09100-12090	BOLT (12X150)	1	OPT
11	09159-12014	NUT	4	
12	09160-12110	WASHER (12.5X22X3)	4	
13	09160-12128	WASHER (12.5X35X3)	4	

DF70A E01
DF70A E40
DF90A E01
DF90A E40
DF100B E01
DF100B E40

DF90A_E01_020_335A
CLAMP BRACKET

FIG.335B

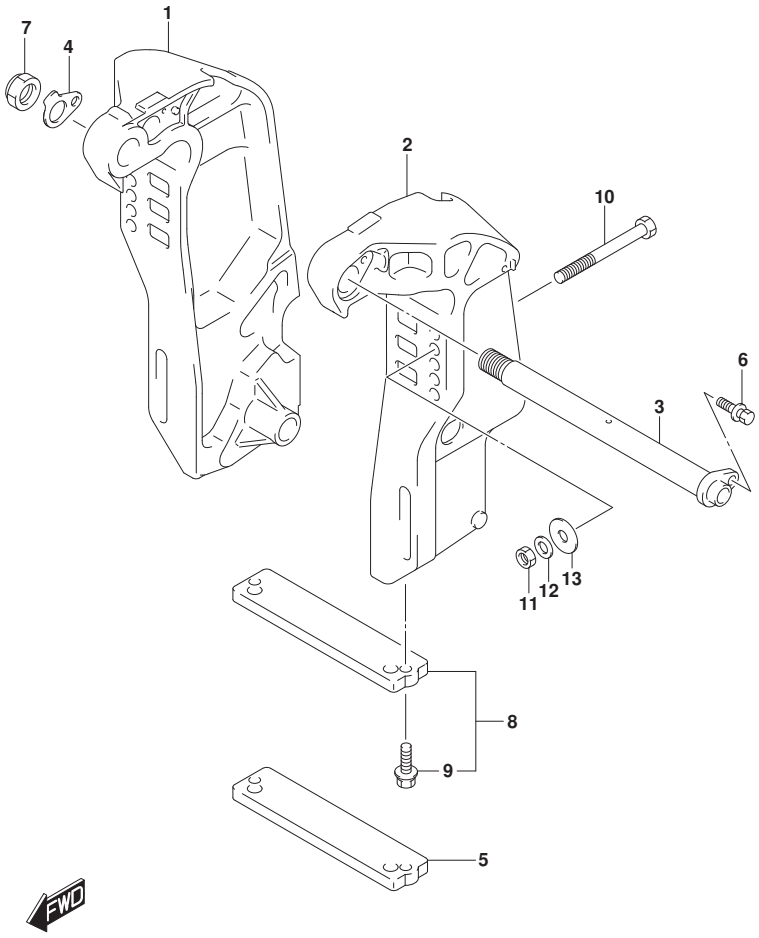

FIG.335B (1-H-10) CLAMP BRACKET (DF70ATH)(DF80A)(DF90ATH)

REF NO.	PART NO.	DESCRIPTION	Q'TY	REMARKS
1	41111-87L10-YAY	BRACKET, CLAMP STBD (BLACK)	1	
2	41121-87L11-YAY	BRACKET, CLAMP PORT (BLACK)	1	
3	41130-87L11	SHAFT, CLAMP BRACKET	1	
4	41135-93J11	WASHER, CLAMP BRACKET SHAFT	1	
5	55321-94910	ANODE (MAGNESIUM)	1	OPT
6	09116-08137	BOLT (8X22)	1	
7	09159-22006	NUT	1	
8	55320-94900	ANODE SET, CLAMP BRACKET	1	
9	09116-06121	.BOLT (6X25)	2	
10-1	09100-12091	BOLT (12X115)	4	
10-2	09100-12090	BOLT (12X150)	1	OPT
11	09159-12014	NUT	4	
12	09160-12110	WASHER (12.5X22X3)	4	
13	09160-12128	WASHER (12.5X35X3)	4	

DF70ATH E01
DF70ATH E40
DF80A E01
DF80A E40
DF90ATH E01
DF90ATH E40

DF90A_E01_020_335B
CLAMP BRACKET

FIG.335C

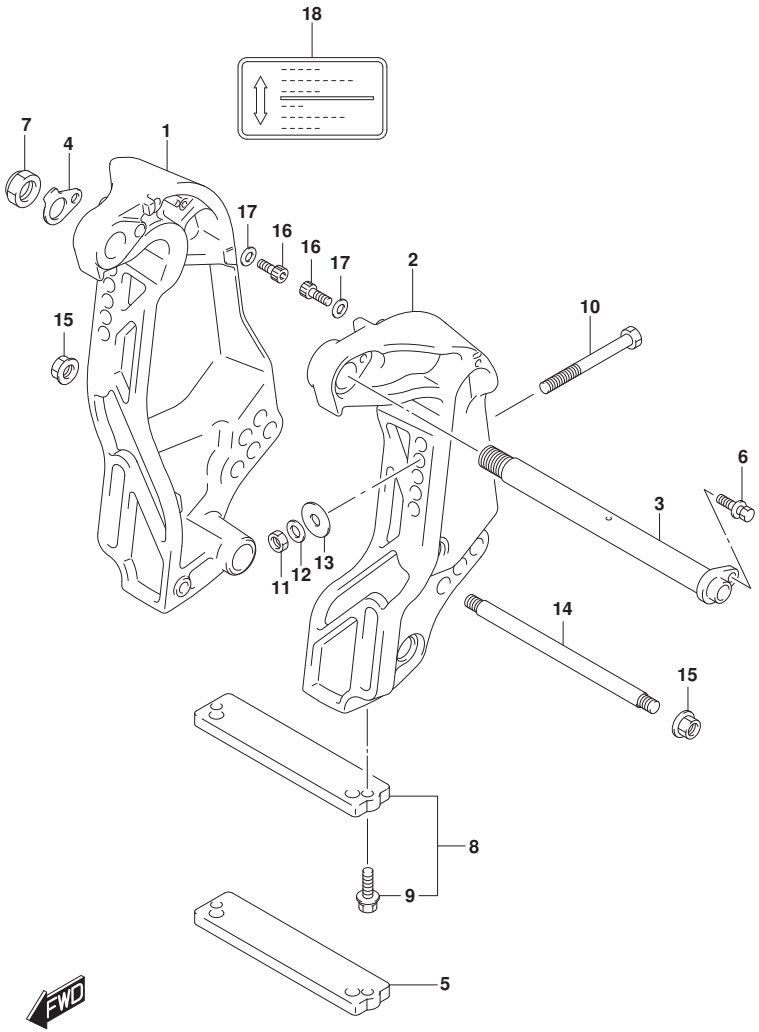

FIG.335C (1-H-11) CLAMP BRACKET (DF90AWQH)

REF NO.	PART NO.	DESCRIPTION	Q'TY	REMARKS
1	41111-87L30-YAY	BRACKET, CLAMP STBD (BLACK)	1	
2	41121-87L30-YAY	BRACKET, CLAMP PORT (BLACK)	1	
3	41130-87L11	SHAFT, CLAMP BRACKET	1	
4	41135-93J11	WASHER, CLAMP BRACKET SHAFT	1	
5	55321-94910	ANODE (MAGNESIUM)	1	OPT
6	09116-08137	BOLT (8X22)	1	
7	09159-22006	NUT	1	
8	55320-94900	ANODE SET, CLAMP BRACKET	1	
9	09116-06121	.BOLT (6X25)	2	
10-1	09100-12127	BOLT (12X115)	4	
10-2	09100-12090	BOLT (12X150)	1	OPT
11	09159-12014	NUT	4	
12	09160-12110	WASHER (12.5X22X3)	4	
13	09160-12128	WASHER (12.5X35X3)	4	
14	45421-87D03	PIN,TILT LOCK	1	
15	09159-14020	NUT	2	
16	09106-10065	BOLT(10X20)	2	
17	09160-10082	WASHER(10.5X19X2)	2	
18	43241-87J00	MARK,RELEASE LEVER	1	

DF90AWQH E40

FIG.336A

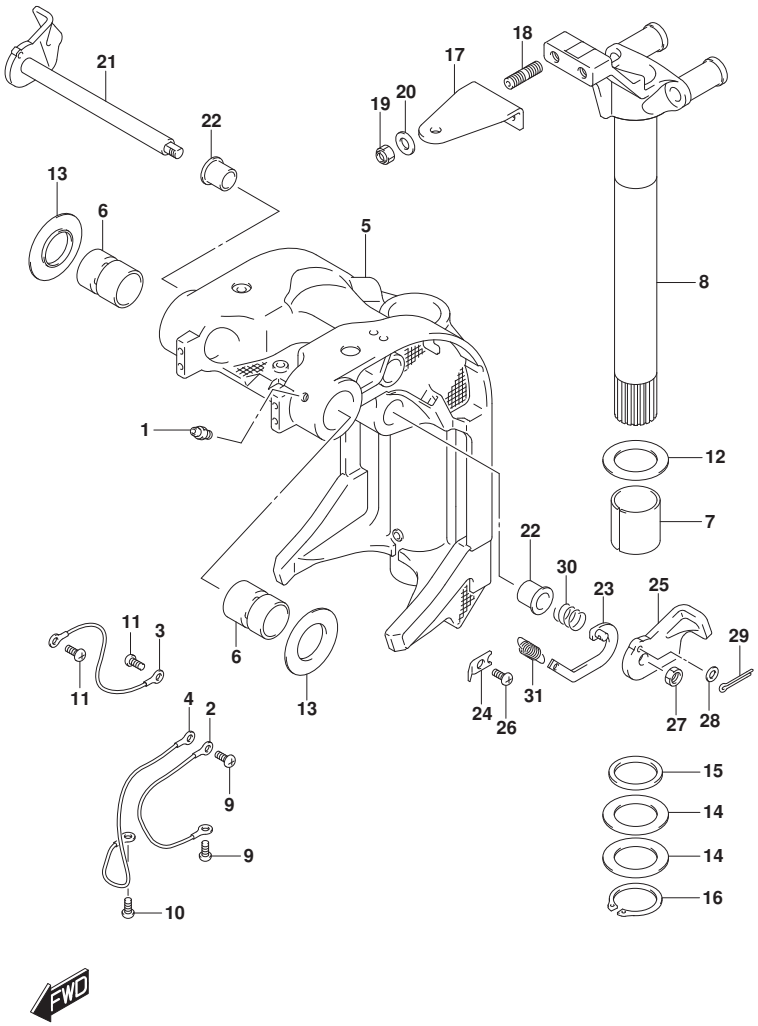

FIG.336A (1-H-12) SWIVEL BRACKET (DF70A)(DF90A)(DF100B)

REF NO.	PART NO.	DESCRIPTION	Q'TY	REMARKS
1	22511-99011	NIPPLE, GREASE	5	
2	36894-87D00	LEAD (SWIVEL TO MOUNT BRKT)	1	L:165
3	36894-87D00	LEAD (CLAMP TO SWIVEL)	1	L:165
4	36895-87D10	LEAD (SWIVEL TO HOUSING)	1	L:310
5-1	43111-87L20-YAY	BRACKET, SWIVEL (BLACK)	1	
5-2	43111-87L20-Y5S	BRACKET, SWIVEL (WHITE)	1	
6	43211-93J11	BUSH, CLAMP SHAFT SWIVEL	2	
7	43711-97E11	BUSH, STEERING	2	
8-1	43750-87L20-YAY	BRACKET, STEERING (BLACK)	1	
8-2	43750-87L20-Y5S	BRACKET, STEERING (WHITE)	1	
9	09125-06063	SCREW (6X10)	2	
10	09125-06063	SCREW (6X10)	1	
11	09125-06063	SCREW (6X10)	2	
12	09160-39001	WASHER (39.5X64X1)	2	
13	09169-28003	WASHER	2	
14	09181-39001	SHIM (39.5X64X0.3)	4	
15	09282-39001	OIL SEAL (39X51X5)	1	
16	09380-38003	CIRCLIP	1	
17	43755-87L00	ATTACHMENT, STEERING BRKT	1	
18	09108-10156	STUD BOLT	2	
19	09159-10050	NUT	2	
20	09160-10141	WASHER (10.5X19X2)	2	
21	41220-93J11	LEVER, TILT LOCK	1	
22	41224-95E01	BUSH, TILT STOPPER ROD	2	
23	41230-87L00	LINK, TILT LOCK LEVER	1	

FIG.336A

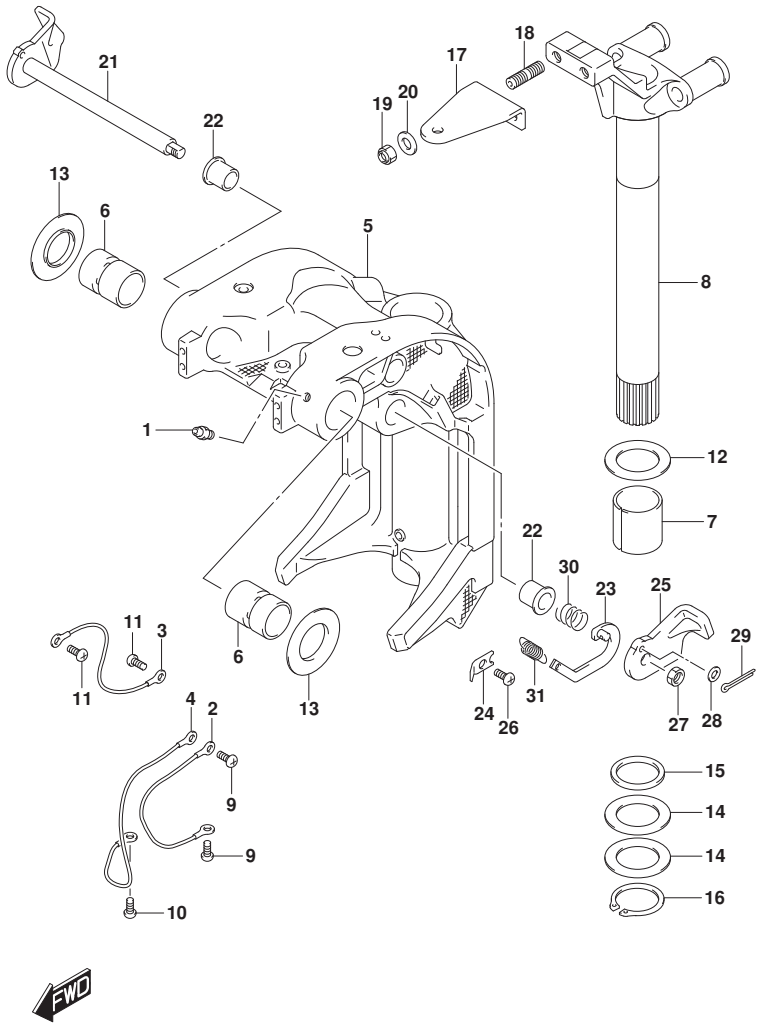

FIG.336A (1-H-13) SWIVEL BRACKET (DF70A)(DF90A)(DF100B)

REF NO.	PART NO.	DESCRIPTION	Q'TY	REMARKS
24	41233-95E10	BRACKET, TILT LOCK SPRING	1	
25	41234-93J11	LEVER, TILT LOCK PORT	1	
26	09125-06063	SCREW (6X10)	1	
27	09140-10032	NUT	1	
28	09160-06082	WASHER (6.5X13X1.0)	1	
29	09204-01006	PIN	1	
30	09440-19028	SPRING	1	
31	09443-10043	SPRING	1	

DF70A E01
DF70A E40
DF90A E01
DF90A E40
DF100B E01
DF100B E40

FIG.336B

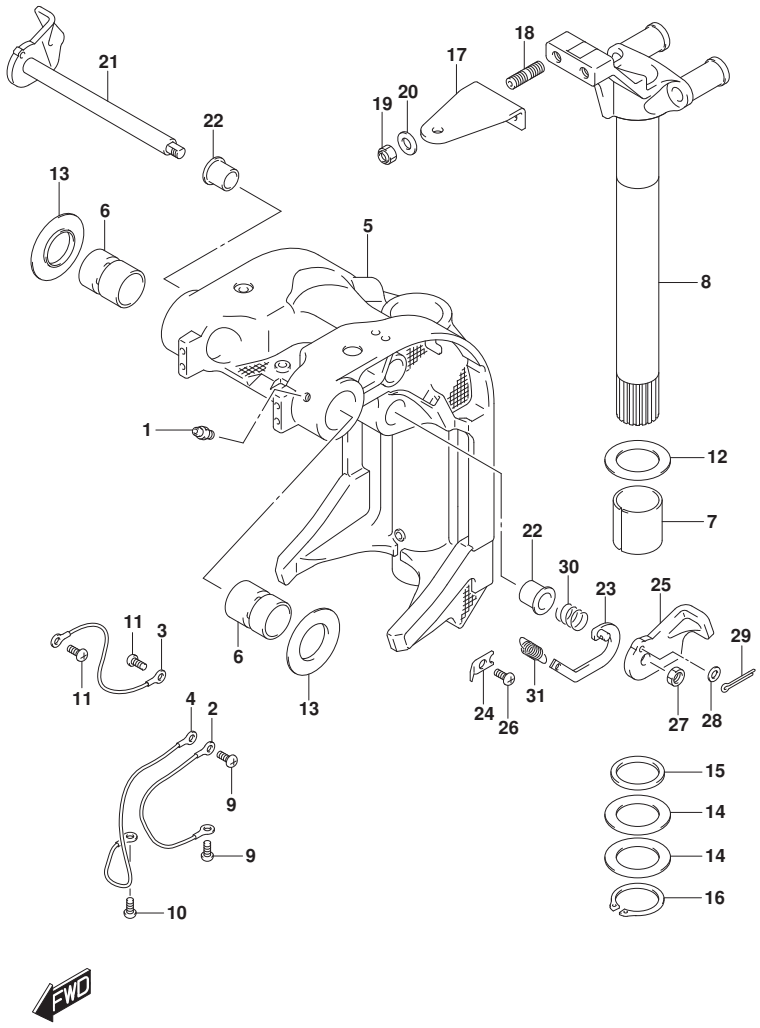

FIG.336B (1-H-14) SWIVEL BRACKET (DF80A)

REF NO.	PART NO.	DESCRIPTION	Q'TY	REMARKS
1	22511-99011	NIPPLE, GREASE	5	
2	36894-87D00	LEAD (SWIVEL TO MOUNT BRKT)	1	L:165
3	36894-87D00	LEAD (CLAMP TO SWIVEL)	1	L:165
4	36895-87D10	LEAD (SWIVEL TO HOUSING)	1	L:310
5	43111-87L20-YAY	BRACKET, SWIVEL (BLACK)	1	
6	43211-93J11	BUSH, CLAMP SHAFT SWIVEL	2	
7	43711-97E11	BUSH, STEERING	2	
8	43750-87L20-YAY	BRACKET, STEERING (BLACK)	1	
9	09125-06063	SCREW (6X10)	2	
10	09125-06063	SCREW (6X10)	1	
11	09125-06063	SCREW (6X10)	2	
12	09160-39001	WASHER (39.5X64X1)	2	
13	09169-28003	WASHER	2	
14	09181-39001	SHIM (39.5X64X0.3)	4	
15	09282-39001	OIL SEAL (39X51X5)	1	
16	09380-38003	CIRCLIP	1	
17	43755-87L00	ATTACHMENT, STEERING BRKT	1	
18	09108-10156	STUD BOLT	2	
19	09159-10050	NUT	2	
20	09160-10141	WASHER (10.5X19X2)	2	
21	41220-93J11	LEVER, TILT LOCK	1	
22	41224-95E01	BUSH, TILT STOPPER ROD	2	
23	41230-87L00	LINK, TILT LOCK LEVER	1	
24	41233-95E10	BRACKET, TILT LOCK SPRING	1	
25	41234-93J11	LEVER, TILT LOCK PORT	1	
26	09125-06063	SCREW (6X10)	1	
27	09140-10032	NUT	1	
28	09160-06082	WASHER (6.5X13X1.0)	1	
29	09204-01006	PIN	1	
30	09440-19028	SPRING	1	
31	09443-10043	SPRING	1	

DF80A E01
DF80A E40

FIG.336C

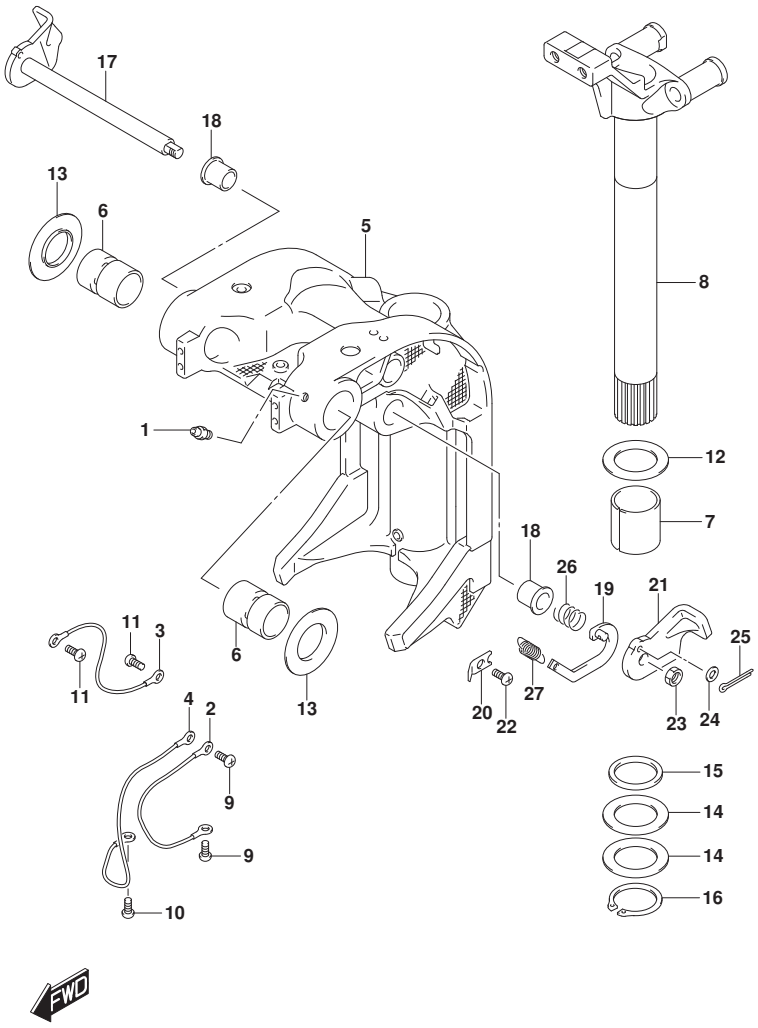

FIG.336C (1-H-15) SWIVEL BRACKET (DF70ATH)(DF90ATH)

REF NO.	PART NO.	DESCRIPTION	Q'TY	REMARKS
1	22511-99011	NIPPLE, GREASE	5	
2	36894-87D00	LEAD (SWIVEL TO MOUNT BRKT)	1	L:165
3	36894-87D00	LEAD (CLAMP TO SWIVEL)	1	L:165
4	36895-87D10	LEAD (SWIVEL TO HOUSING)	1	L:310
5	43111-87L20-YAY	BRACKET, SWIVEL (BLACK)	1	
6	43211-93J11	BUSH, CLAMP SHAFT SWIVEL	2	
7	43711-97E11	BUSH, STEERING	2	
8	43750-87L20-YAY	BRACKET, STEERING (BLACK)	1	
9	09125-06063	SCREW (6X10)	2	
10	09125-06063	SCREW (6X10)	1	
11	09125-06063	SCREW (6X10)	2	
12	09160-39001	WASHER (39.5X64X1)	2	
13	09169-28003	WASHER	2	
14	09181-39001	SHIM (39.5X64X0.3)	4	
15	09282-39001	OIL SEAL (39X51X5)	1	
16	09380-38003	CIRCLIP	1	
17	41220-93J11	LEVER, TILT LOCK	1	
18	41224-95E01	BUSH, TILT STOPPER ROD	2	
19	41230-87L00	LINK, TILT LOCK LEVER	1	
20	41233-95E10	BRACKET, TILT LOCK SPRING	1	
21	41234-93J11	LEVER, TILT LOCK PORT	1	
22	09125-06063	SCREW (6X10)	1	
23	09140-10032	NUT	1	
24	09160-06082	WASHER (6.5X13X1.0)	1	
25	09204-01006	PIN	1	
26	09440-19028	SPRING	1	
27	09443-10043	SPRING	1	

DF70ATH E01
DF70ATH E40
DF90ATH E01
DF90ATH E40

FIG.336D

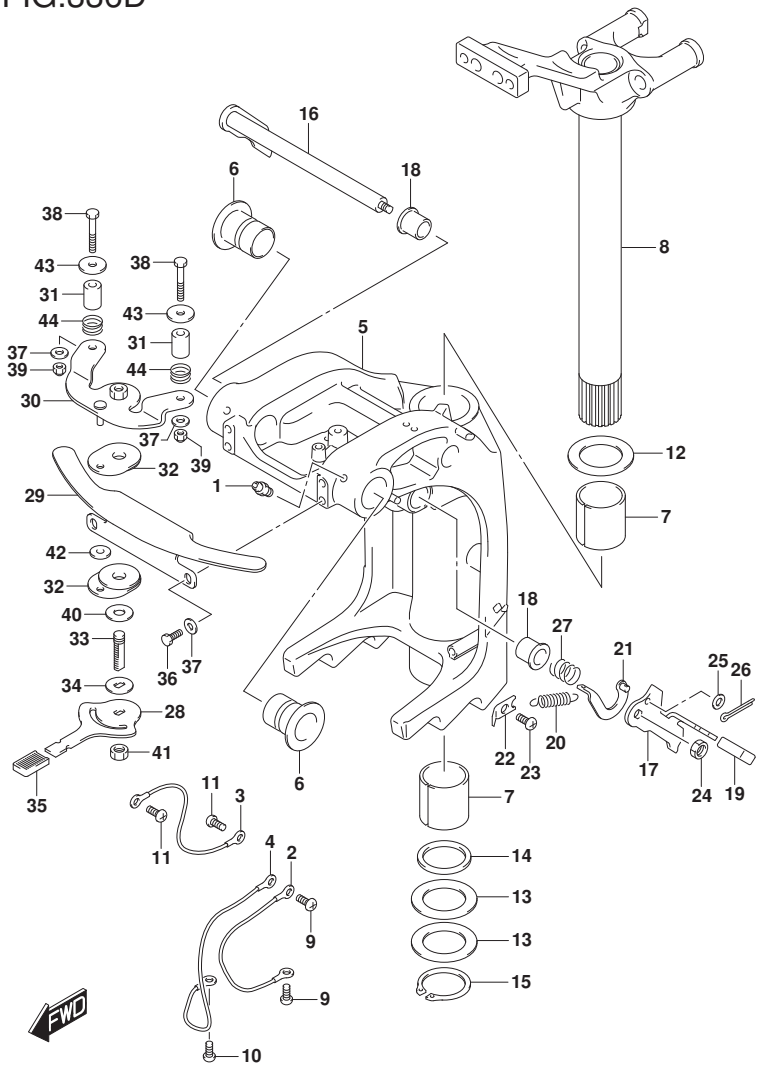

FIG.336D (1-I-2) SWIVEL BRACKET (DF90AWQH)

REF NO.	PART NO.	DESCRIPTION	Q'TY	REMARKS
1	22511-99011	NIPPLE, GREASE	5	
2	36894-87D00	LEAD (SWIVEL TO MOUNT BRKT)	1	L:165
3	36894-87D00	LEAD (CLAMP TO SWIVEL)	1	L:165
4	36895-87D10	LEAD (SWIVEL TO HOUSING)	1	L:310
5	43111-87L30-YAY	BRACKET, SWIVEL (BLACK)	1	
6	43211-87L00	BUSH, CLAMP SHAFT SWIVEL	2	
7	43711-97E11	BUSH, STEERING	2	
8	43750-87L30-YAY	BRACKET, STEERING (BLACK)	1	
9	09125-06063	SCREW (6X10)	2	
10	09125-06063	SCREW (6X10)	1	
11	09125-06063	SCREW (6X10)	2	
12	09160-39001	WASHER (39.5X64X1)	2	
13	09181-39001	SHIM (39.5X64X0.3)	4	
14	09282-39001	OIL SEAL (39X51X5)	1	
15	09380-38003	CIRCLIP	1	
16	41220-87L00	LEVER, TILT LOCK	1	
17	41221-95E40	LEVER,TILT LOCK PORT	1	
18	41224-95E01	BUSH, TILT STOPPER ROD	2	
19	41225-94400	RUBBER,TILT LOCK	1	
20	41228-90J00	SPRING,TILT LOCK LEVER	1	
21	41230-95E00	LINK, TILT LOCK LEVER	1	
22	41233-95E10	BRACKET, TILT LOCK SPRING	1	
23	09125-06063	SCREW (6X10)	1	
24	09140-10032	NUT	1	
25	09160-06082	WASHER (6.5X13X1.0)	1	
26	09204-01006	PIN	1	
27	09440-19028	SPRING	1	

FIG.336D

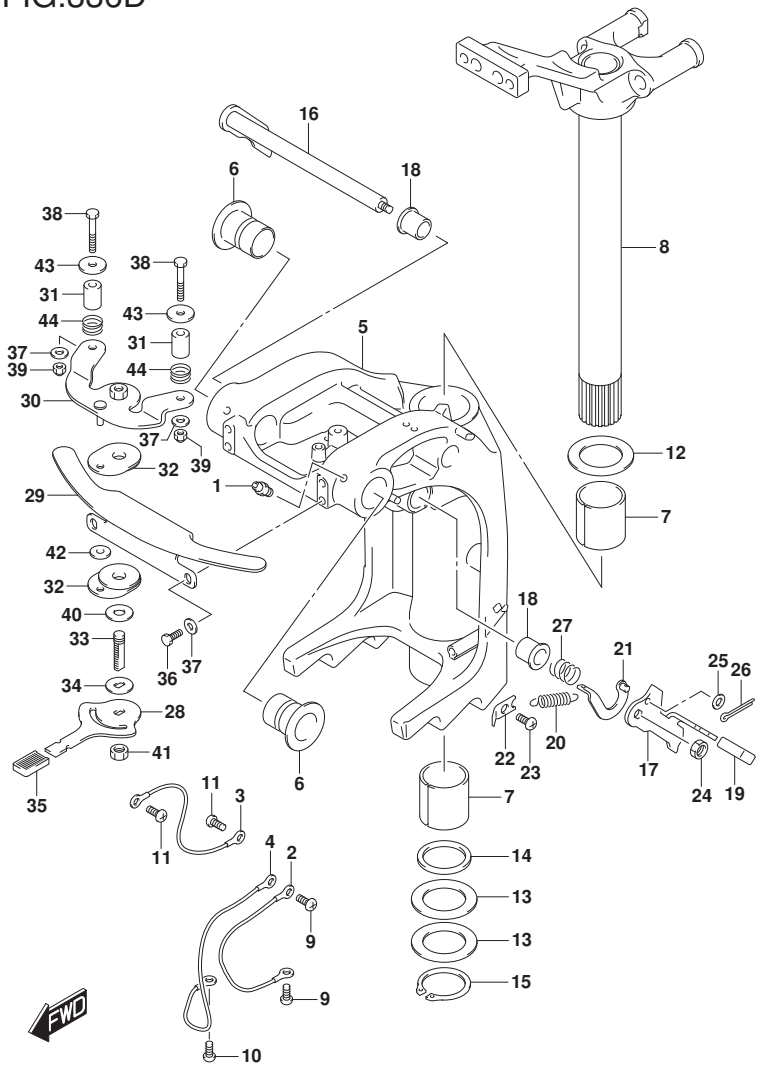

FIG.336D (1-I-3) SWIVEL BRACKET (DF90AWQH)

REF NO.	PART NO.	DESCRIPTION	Q'TY	REMARKS
28	43411-87L00	LEVER,STEERING ADJUSTER	1	
29	43415-87L00	PLATE,STEERING ADJUSTER	1	
30	43420-87L00	PLATE COMP,STRG ADJ UPPER	1	
31	43427-87L00	SPACER,STRG ADJ FRICTION	2	
32	43510-87L00	PLATE COMP,STRG ADJ FRICTION	2	
33	43512-87L00	SHAFT,STRG ADJ THREAD	1	
34	43516-87L00	WASHER,STRG ADJ FRICTION	1	
35	45255-93001	RUBBER,RELEASE LEVER	1	
36	09100-06182	BOLT,STRG ADJ PLATE	2	
37	09160-06094	WASHER(6.5X15X1.0)	4	
38	09100-06183	BOLT,STRG ADJ UPPER PLATE	2	
39	09159-06079	NUT	2	
40	09161-10013	WASHER,STEERING ADJUSTER	1	
41	09159-10232	NUT,STEERING ADJUSTER	1	
42	09160-06173	WASHER(6.2X19X3)	1	
43	09160-06174	WASHER,STRG ADJ UPPER PLATE	2	
44	09440-19028	SPRING	2	

DF90AWQH E40

FIG.337A

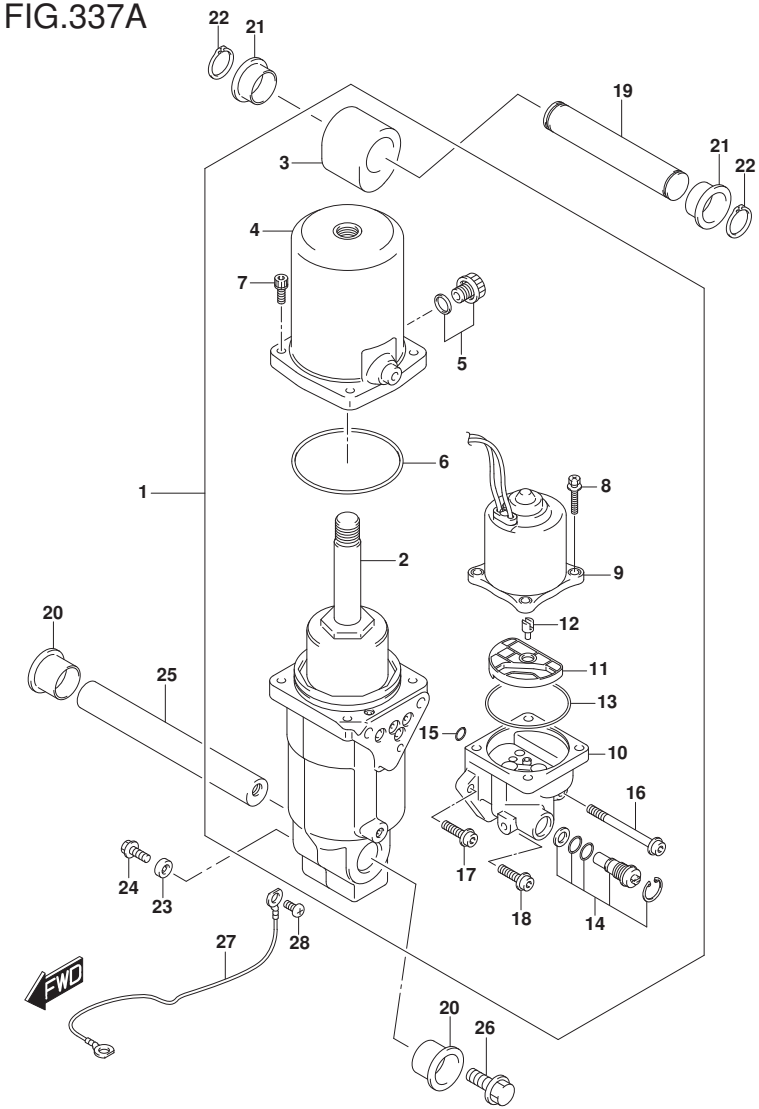

FIG.337A (1-I-4) TRIM CYLINDER (DF70A)(DF70ATH)(DF80A)(DF90A)(DF90ATH)

REF NO.	PART NO.	DESCRIPTION	Q'TY	REMARKS
1	48000-87L14	TRIM ASSY, POWER WITH TILT	1	
2	48400-87L03	.MANIFOLD ASSY	1	
3	48611-87L00	.JOINT, METAL	1	
4	48571-87L01	.TANK, RESERVOIR	1	
5	48572-87L00	.PLUG	1	
6	48557-90J00	.O RING	1	
7	48862-87J20	.BOLT, RESERVOIR	4	
8	31281-92J10	.BOLT, THROUGH	4	
9	38100-87L12	.MOTOR ASSY, PTT	1	
10	48502-87L02	.PUMP ASSY	1	
11	48582-95E01	.FILTER	1	
12	48583-95E00	.JOINT, DRIVE	1	
13	48585-95E00	.O RING	1	
14	48864-96J10	.VALVE SET, MANUAL	1	
15	48588-90J00	.O RING SET	1	
16	48862-92J20	.BOLT, PUMP NO.1	1	
17	48862-92J30	.BOLT, PUMP NO.2	1	
18	48862-90J21	.BOLT	1	
19	48321-90J00	SHAFT, TILT CYL UPPER	1	
20	48326-95E00	BUSH, TILT CYL LOWER	2	
21	48325-87L00	BUSH, TILT CYL UPPER	2	

DF90A_E01_020_337A
TRIM CYLINDER

FIG.337A

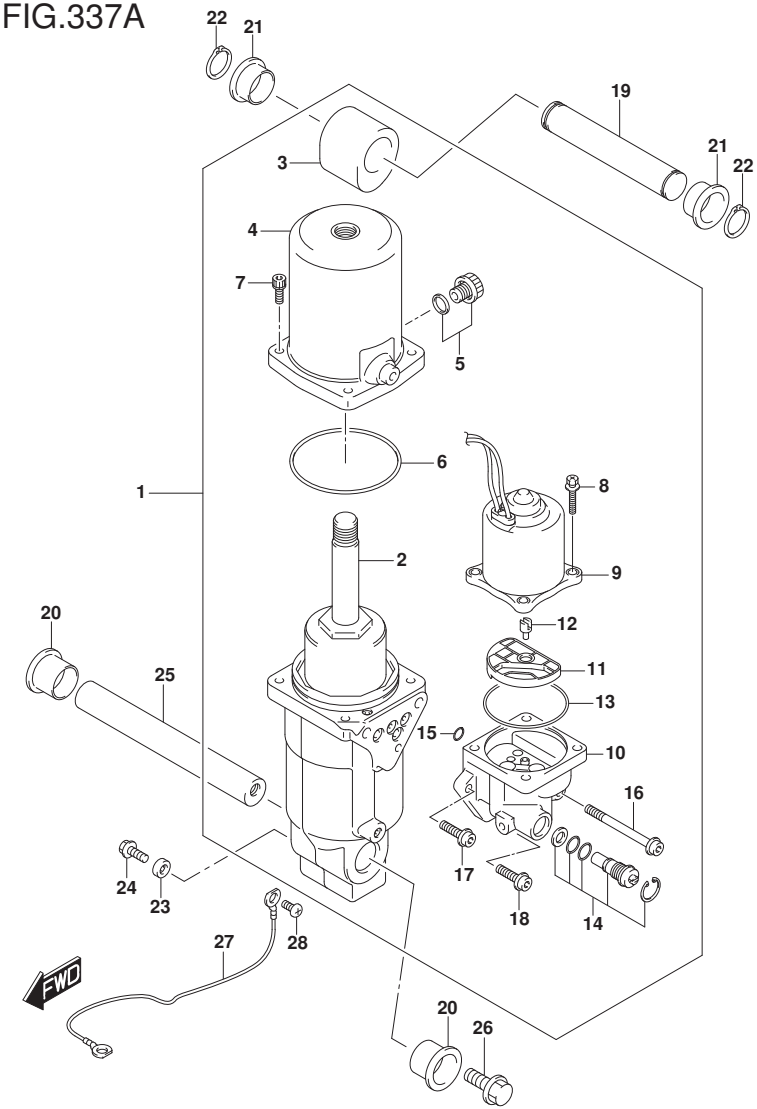

FIG.337A (1-I-5) TRIM CYLINDER (DF70A)(DF70ATH)(DF80A)(DF90A)(DF90ATH)

REF NO.	PART NO.	DESCRIPTION	Q'TY	REMARKS
22	09380-22015	CIRCLIP	2	
23	55321-87J01	ANODE, PROTECTION	1	
24	09103-06281	BOLT (6X14)	1	
25	48121-90J00	SHAFT, TILT CYL LOWER	1	
26	09116-10179	BOLT (10X35)	2	
27	36895-87D10	LEAD, PTT TO ANODE (L:310)	1	
28	09125-05050	SCREW (5X8)	1	

DF70A E01
DF70A E40
DF70ATH E01
DF70ATH E40
DF80A E01
DF80A E40
DF90A E01
DF90A E40
DF90ATH E01
DF90ATH E40

DF90A_E01_020_337A
TRIM CYLINDER

FIG.337B

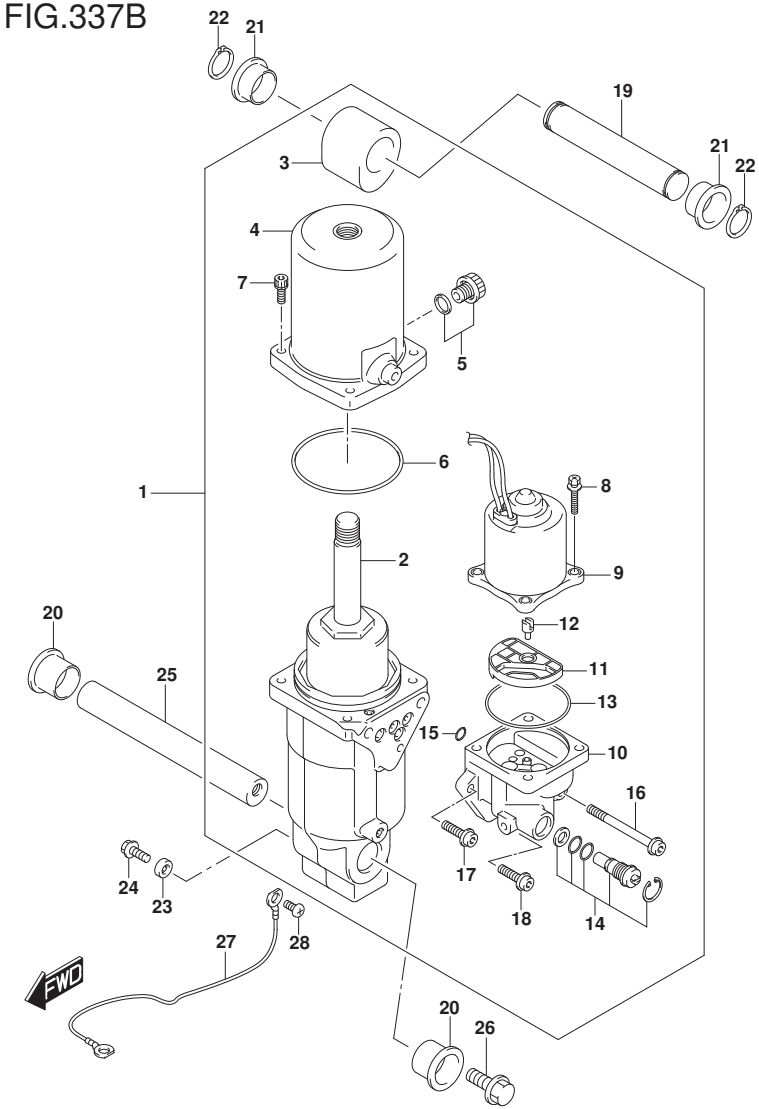

FIG.337B (1-I-6) TRIM CYLINDER (DF100B)

REF NO.	PART NO.	DESCRIPTION	Q'TY	REMARKS
1	48000-87L14	TRIM ASSY, POWER WITH TILT	1	
2	48400-87L03	.MANIFOLD ASSY	1	
3	48611-87L00	.JOINT, METAL	1	
4	48571-87L01	.TANK, RESERVOIR	1	
5	48572-87L00	.PLUG	1	
6	48557-90J00	.O RING	1	
7	48862-87J20	.BOLT, RESERVOIR	4	
8	31281-92J10	.BOLT, THROUGH	4	
9	38100-87L12	.MOTOR ASSY, PTT	1	
10	48502-87L02	.PUMP ASSY	1	
11	48582-95E01	.FILTER	1	
12	48583-95E00	.JOINT, DRIVE	1	
13	48585-95E00	.O RING	1	
14	48864-96J10	.VALVE SET, MANUAL	1	
15	48588-90J00	.O RING SET	1	
16	48862-92J20	.BOLT, PUMP NO.1	1	
17	48862-92J30	.BOLT, PUMP NO.2	1	
18	48862-90J21	.BOLT	1	
19	48321-90J00	SHAFT, TILT CYL UPPER	1	
20	48326-95E00	BUSH, TILT CYL LOWER	2	
21	48325-87L00	BUSH, TILT CYL UPPER	2	
22	09380-22015	CIRCLIP	2	
23	55321-87J01	ANODE, PROTECTION	1	
24	09103-06281	BOLT (6X14)	1	
25	48121-90J00	SHAFT, TILT CYL LOWER	1	
26	09116-10179	BOLT (10X35)	2	
27	36895-87D10	LEAD, PTT TO ANODE (L:310)	1	
28	09125-05050	SCREW (5X8)	1	

DF100B E01
DF100B E40

DF90A_E01_020_337B
TRIM CYLINDER

FIG.339A

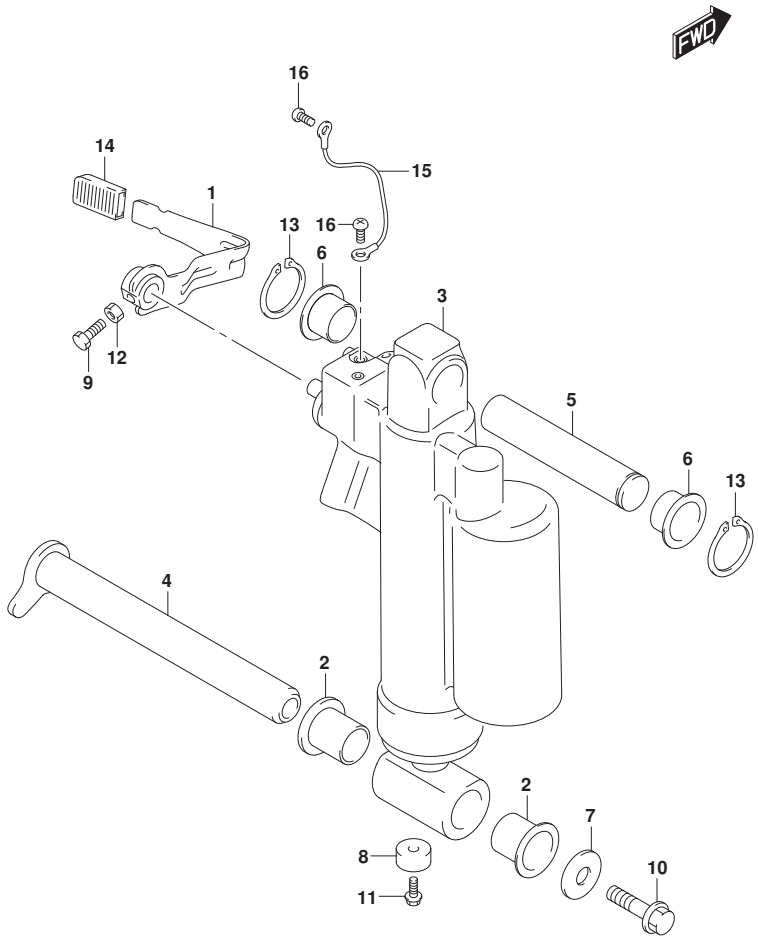

FIG.339A (1-I-7) GAS CYLINDER (DF90AWQH)

REF NO.	PART NO.	DESCRIPTION	Q'TY	REMARKS
1	45260-87L00	LEVER, RELEASE	1	
2	48326-95E00	BUSH,TILT CYLINDER LWR	2	
3	47400-87L00	CYLINDER ASSY, GAS	1	
4	48120-87L00	SHAFT, TILT CYLINDER LOWER	1	
5	48321-90J00	SHAFT,TILT CYLINDER UPR	1	
6	48325-87L00	BUSH, TILT CYLINDER UPPER	2	
7	09160-10161	WASHER,TILT CYL LWR SHAFT BOLT	1	
8	55321-87J01	ANODE, PROTECTION	1	
9	09100-06184	BOLT (6X16)	1	
10	09116-10179	BOLT (10X35)	1	
11	09103-06281	BOLT (6X14)	1	
12	09140-06020	NUT	1	
13	09380-22015	CIRCLIP	2	
14	45255-93001	RUBBER,RELEASE LEVER	1	
15	36894-87D00	LEAD(L:165)	1	
16	09125-06063	SCREW(6X10)	2	

DF90AWQH E40

FIG.340A

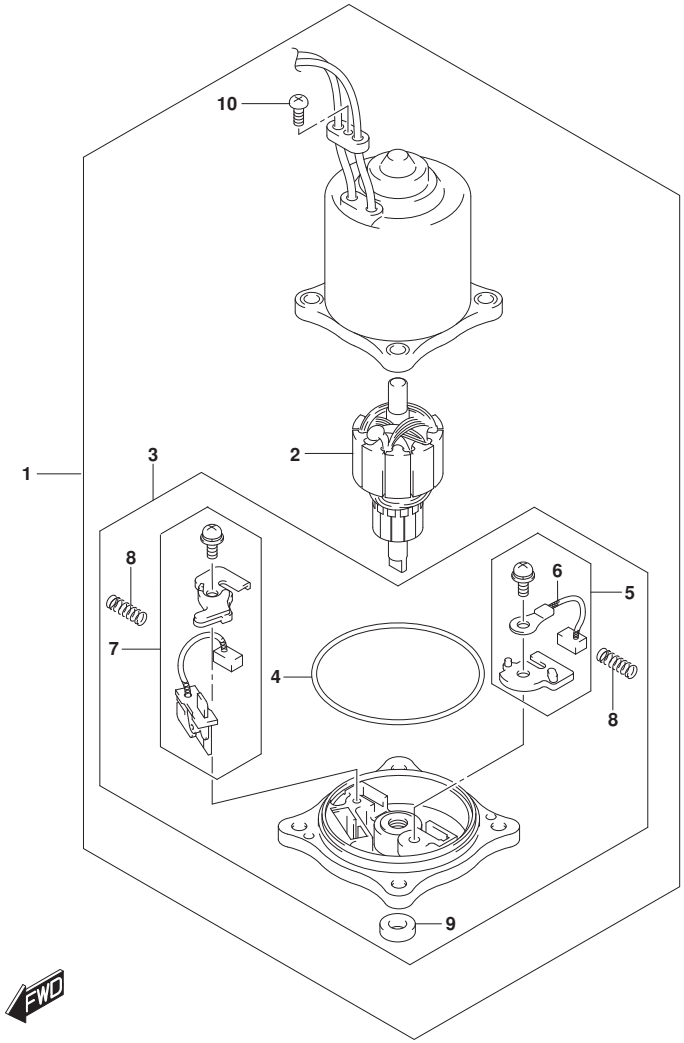

FIG.340A (1-I-8) PTT MOTOR (DF70A)(DF70ATH)(DF80A)(DF90A)(DF90ATH)

REF NO.	PART NO.	DESCRIPTION	Q'TY	REMARKS
1	38100-87L12	MOTOR ASSY, PTT	1	
2	31311-93J00	.ARMATURE	1	
3	31173-94920	.HOLDER, BRUSH	1	
4	31123-94910	..O RING	1	
5	31133-90J10	..BRUSH SET	1	
6	31133-94910	...BRUSH, PLUS	1	
7	31136-90J20	..BREAKER ASSY	1	
8	31135-94900	..SPRING	2	
9	33799-97E00	..OIL SEAL	1	
10	31111-94900	.SCREW	1	

DF70A E01
DF70A E40
DF70ATH E01
DF70ATH E40
DF80A E01
DF80A E40
DF90A E01
DF90A E40
DF90ATH E01
DF90ATH E40

DF90A_E01_020_340A
PTT MOTOR

FIG.340B

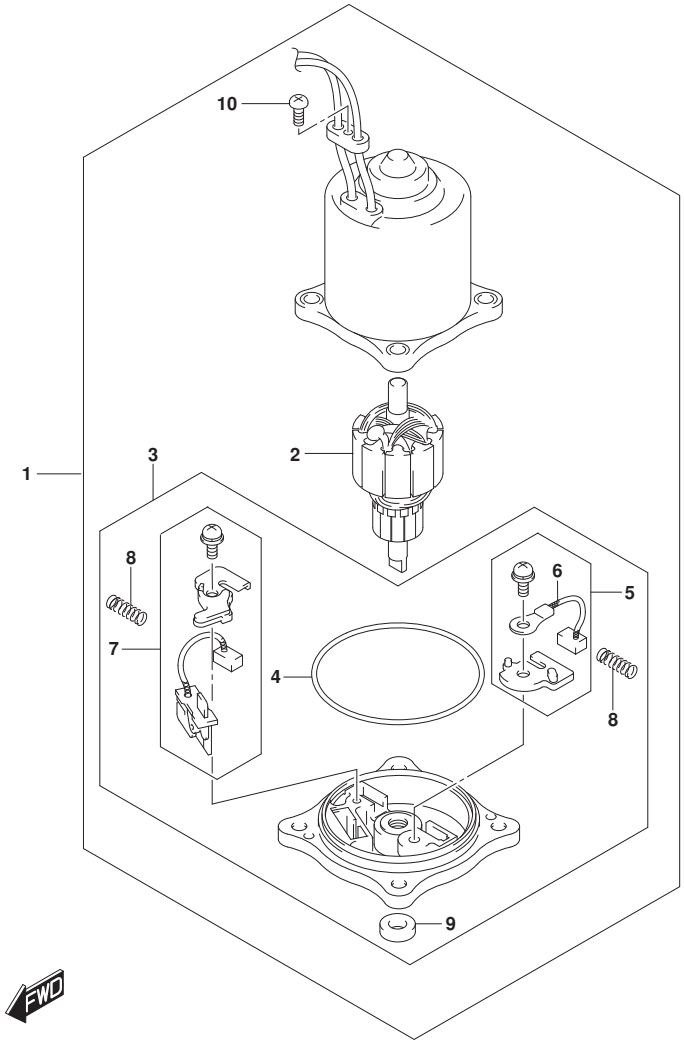

FIG.340B (1-I-9) PTT MOTOR (DF100B)

REF NO.	PART NO.	DESCRIPTION	Q'TY	REMARKS
1	38100-87L12	MOTOR ASSY, PTT	1	
2	31311-93J00	.ARMATURE	1	
3	31173-94920	.HOLDER, BRUSH	1	
4	31123-94910	..O RING	1	
5	31133-90J10	..BRUSH SET	1	
6	31133-94910	...BRUSH, PLUS	1	
7	31136-90J20	..BREAKER ASSY	1	
8	31135-94900	..SPRING	2	
9	33799-97E00	..OIL SEAL	1	
10	31111-94900	.SCREW	1	

DF100B E01
DF100B E40

DF90A_E01_020_340B
PTT MOTOR

FIG.401A

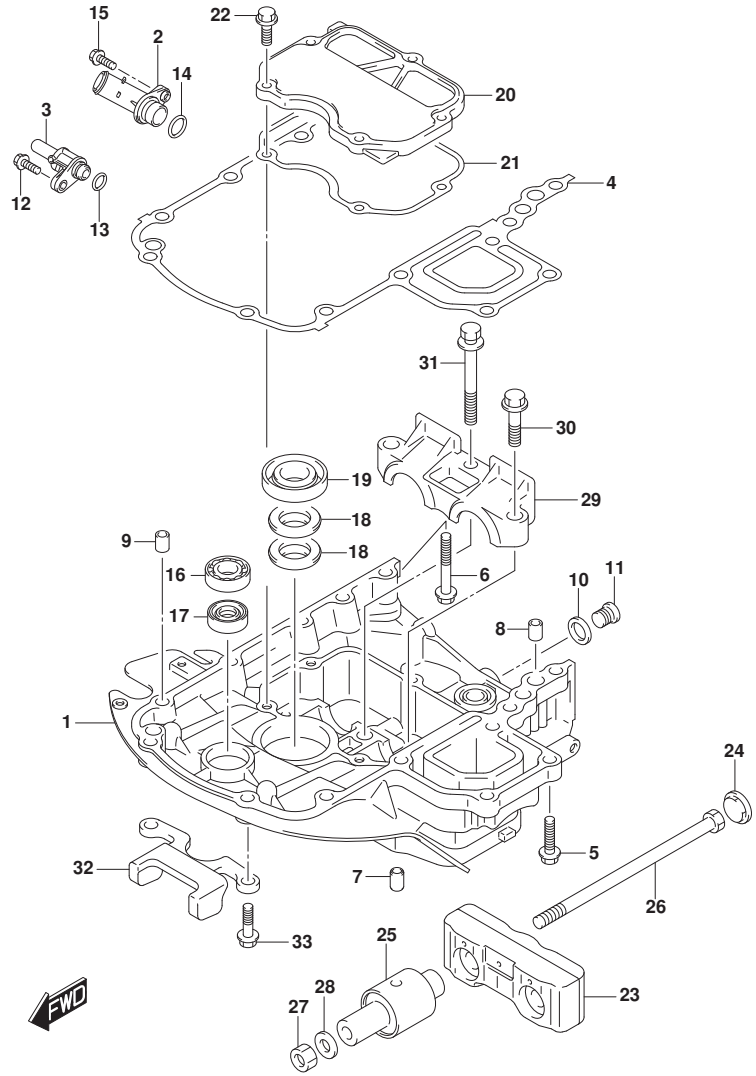

FIG.401A (1-I-10) ENGINE HOLDER (DF70A)(DF90A)(DF100B)

REF NO.	PART NO.	DESCRIPTION	Q'TY	REMARKS
1-1	51111-87L00-YAY	HOLDER, ENGINE (BLACK)	1	
1-2	51111-87L00-Y5S	HOLDER, ENGINE (WHITE)	1	
2	51115-87L00	UNION, WATER RETURN	1	
3	51117-87L00	UNION, WATER INDICATOR	1	
4	51211-87L10	GASKET, ENGINE HOLDER	1	
5	09116-08128	BOLT (8X40)	7	
6	09116-08159	BOLT (8X55)	1	
7	09202-08006	PIN (8X12)	2	
8	04211-11129	PIN	2	
9	04211-11129	PIN	1	
10	09160-18031	WASHER (18.5X28X2.6)	1	
11	09248-18010	PLUG (18X15)	1	
12	29116-93J00	BOLT, WATER INDICATOR UNION	1	
13	09280-11001	O RING (D:2.4,ID:10.8)	1	
14	09280-20002	O RING (D:3.1,ID:19.4)	1	
15	01550-0620C	BOLT	1	
16	09262-17019	BEARING (17X35X8)	1	
17	09289-18001	OIL SEAL (18X30X8)	1	
18	09282-22007	OIL SEAL (22X36X6)	2	
19	12281-87J00	SEAL, DRIVEN GEAR	1	
20	51122-87L00	COVER, MOUNT CASE	1	
21	51123-87L00	GASKET, MOUNT CASE COVER	1	
22	01550-0825A	BOLT	5	
23	54120-87L11	MOUNT, UPPER THRUST	1	
24	54122-87L01	SPACER, UPPER THRUST MOUNT	2	

FIG.401A

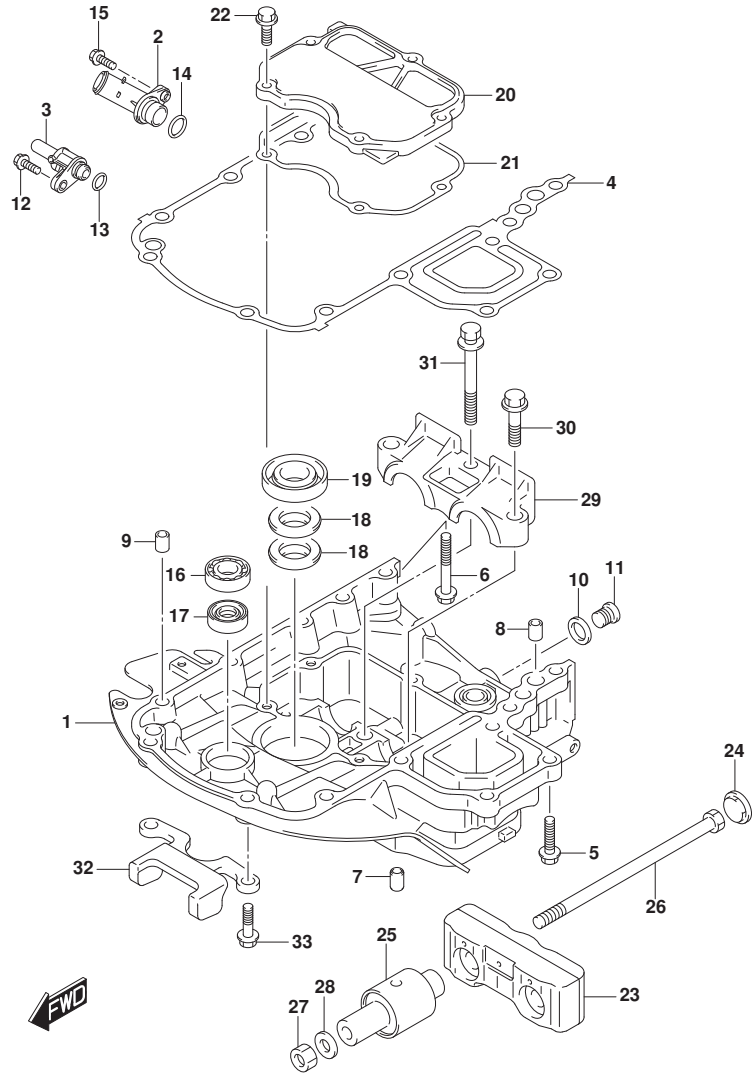

FIG.401A (1-I-11) ENGINE HOLDER (DF70A)(DF90A)(DF100B)

REF NO.	PART NO.	DESCRIPTION	Q'TY	REMARKS
25	54130-87L00	MOUNT, UPPER	2	
26	54166-95J02	BOLT, UPPER MOUNT	2	
27	09159-12014	NUT	2	
28	09160-12110	WASHER (12.5X22X3)	2	
29	54137-87L00	COVER, UPPER MOUNT	1	
30	09116-10181	BOLT (10X44)	2	
31	09116-10147	BOLT (10X85)	1	
32	54140-87L10	STOPPER, UPPER UNIT	1	
33	09116-08137	BOLT (8X22)	2	

DF70A E01
DF70A E40
DF90A E01
DF90A E40
DF100B E01
DF100B E40

DF90A_E01_020_401A
ENGINE HOLDER

FIG.401B

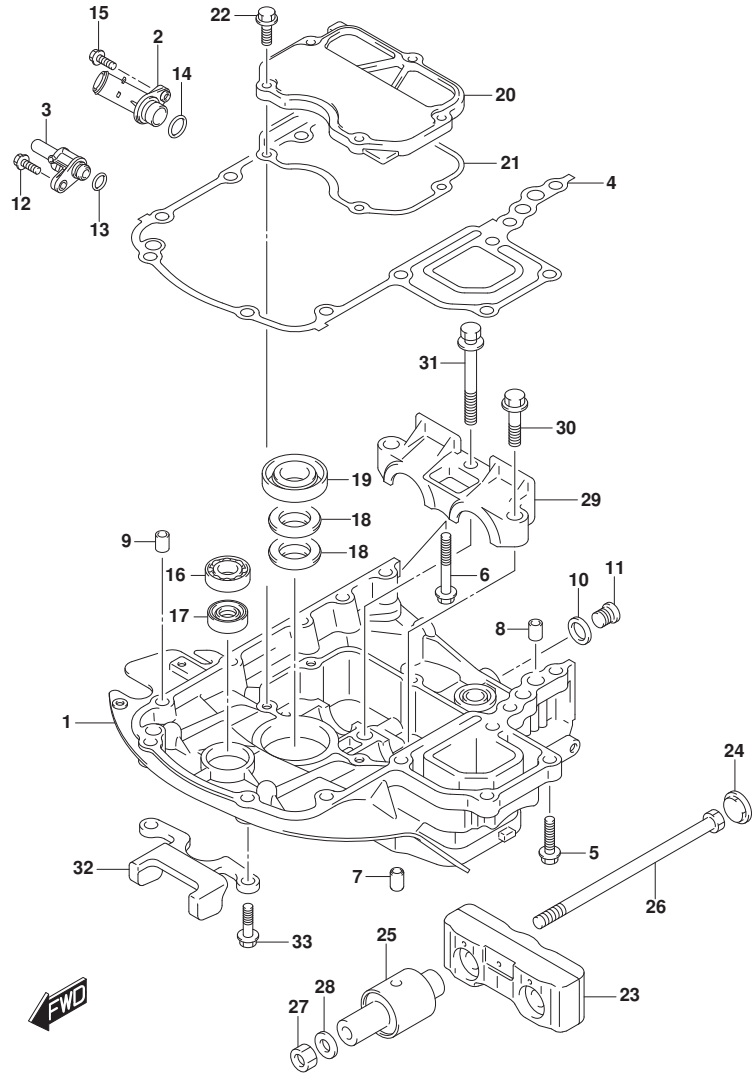

FIG.401B (1-I-12) ENGINE HOLDER (DF70ATH)(DF80A)(DF90ATH)(DF90AWQH)

REF NO.	PART NO.	DESCRIPTION	Q'TY	REMARKS
1	51111-87L00-YAY	HOLDER, ENGINE (BLACK)	1	
2	51115-87L00	UNION, WATER RETURN	1	
3	51117-87L00	UNION, WATER INDICATOR	1	
4	51211-87L10	GASKET, ENGINE HOLDER	1	
5	09116-08128	BOLT (8X40)	7	
6	09116-08159	BOLT (8X55)	1	
7	09202-08006	PIN (8X12)	2	
8	04211-11129	PIN	2	
9	04211-11129	PIN	1	
10	09160-18031	WASHER (18.5X28X2.6)	1	
11	09248-18010	PLUG (18X15)	1	
12	29116-93J00	BOLT, WATER INDICATOR UNION	1	
13	09280-11001	O RING (D:2.4,ID:10.8)	1	
14	09280-20002	O RING (D:3.1,ID:19.4)	1	
15	01550-0620C	BOLT	1	
16	09262-17019	BEARING (17X35X8)	1	
17	09289-18001	OIL SEAL (18X30X8)	1	
18	09282-22007	OIL SEAL (22X36X6)	2	
19	12281-87J00	SEAL, DRIVEN GEAR	1	
20	51122-87L00	COVER, MOUNT CASE	1	
21	51123-87L00	GASKET, MOUNT CASE COVER	1	
22	01550-0825A	BOLT	5	
23	54120-87L11	MOUNT, UPPER THRUST	1	
24	54122-87L01	SPACER, UPPER THRUST MOUNT	2	
25	54130-87L00	MOUNT, UPPER	2	

FIG.401B

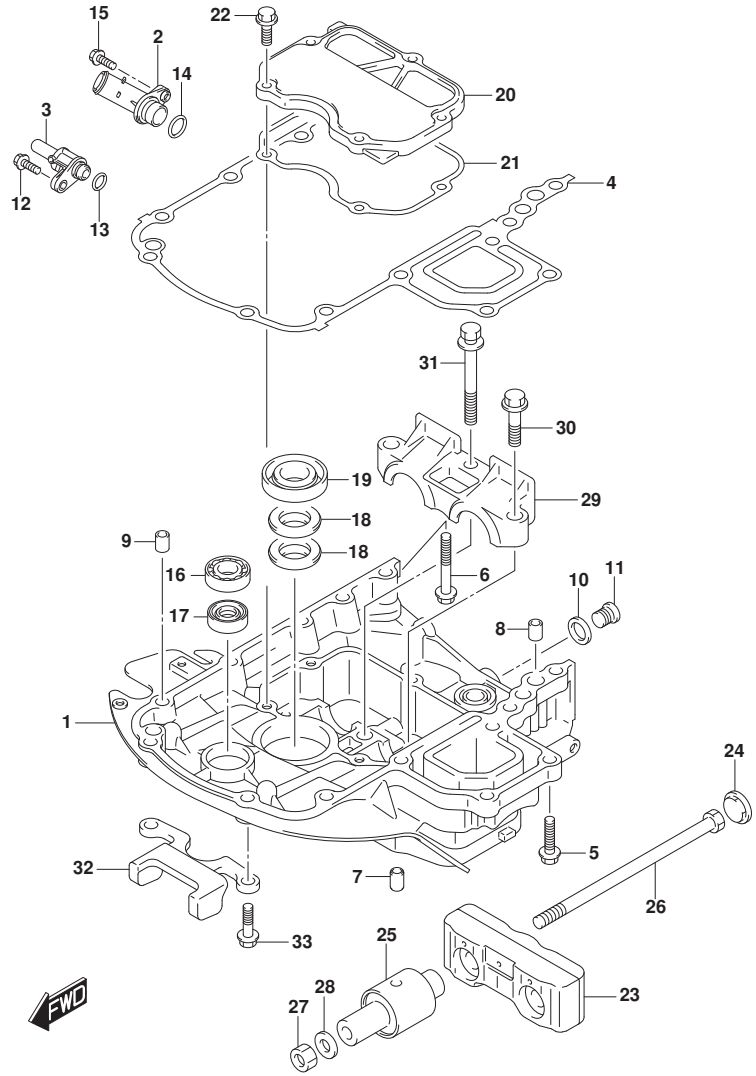

FIG.401B (1-I-13) ENGINE HOLDER (DF70ATH)(DF80A)(DF90ATH)(DF90AWQH)

REF NO.	PART NO.	DESCRIPTION	Q'TY	REMARKS
26	54166-95J02	BOLT, UPPER MOUNT	2	
27	09159-12014	NUT	2	
28	09160-12110	WASHER (12.5X22X3)	2	
29	54137-87L00	COVER, UPPER MOUNT	1	
30	09116-10181	BOLT (10X44)	2	
31	09116-10147	BOLT (10X85)	1	
32	54140-87L10	STOPPER, UPPER UNIT	1	
33	09116-08137	BOLT (8X22)	2	

DF70ATH E01
DF70ATH E40
DF80A E01
DF80A E40
DF90ATH E01
DF90ATH E40
DF90AWQH E40

FIG.405A

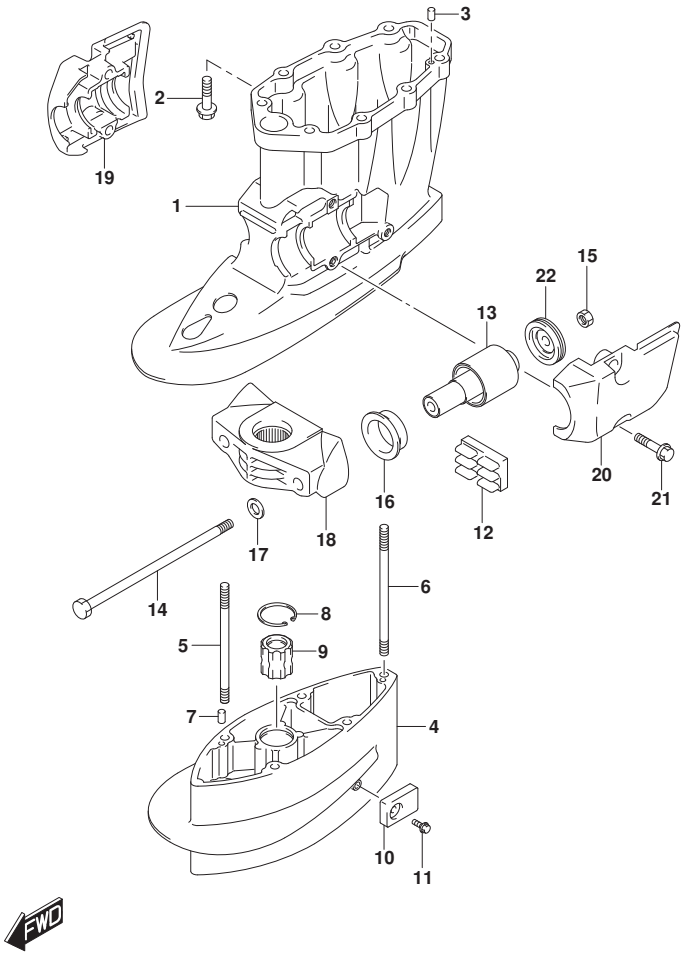

FIG.405A (1-I-14) DRIVE SHAFT HOUSING (DF70A)(DF90A)(DF100B)

REF NO.	PART NO.	DESCRIPTION	Q'TY	REMARKS
1-1	52111-87L00-YAY	HOUSING, DRIVE SHAFT (BLACK)	1	
1-2	52111-87L00-Y5S	HOUSING, DRIVE SHAFT (WHITE)	1	
2	09116-10181	BOLT (10X44)	8	
3	09202-08006	PIN (8X12)	2	
4-1	52131-87L00-YAY	CASE, EXTENSION (BLACK)	1	W/TRANSOM(X)
4-2	52131-87L00-Y5S	CASE, EXTENSION (WHITE)	1	W/TRANSOM(X)
5	09108-10115	STUD BOLT	4	W/TRANSOM(X)
6	09108-10157	STUD BOLT	1	W/TRANSOM(X)
7	09202-08006	PIN (8X12)	2	W/TRANSOM(X)
8	09381-40005	CIRCLIP	1	W/TRANSOM(X)
9	57130-87E02	BUSH, DRIVE SHAFT	1	W/TRANSOM(X)
10	55321-93J01	ANODE, PROTECTION	1	W/TRANSOM(X)
11	09116-06236	BOLT (6X16)	1	W/TRANSOM(X)
12	54151-87L01	MOUNT, LOWER THRUST	1	
13	54160-87L10	MOUNT, LOWER	2	
14	54166-95J02	BOLT, LOWER MOUNT	2	
15	09159-12014	NUT	2	
16	54167-87L10	MOUNT, FWD LOWER SIDE	2	
17	54114-90J10	WASHER, LOWER MOUNT BOLT	2	
18-1	54211-90J01-YAY	BRACKET, LOWER MOUNT (BLACK)	1	
18-2	54211-90J01-Y5S	BRACKET, LOWER MOUNT (WHITE)	1	
19-1	54221-87L00-YAY	COVER, LOWER MOUNT STBD (BLACK)	1	
19-2	54221-87L00-Y5S	COVER, LOWER MOUNT STBD (WHITE)	1	

FIG.405A

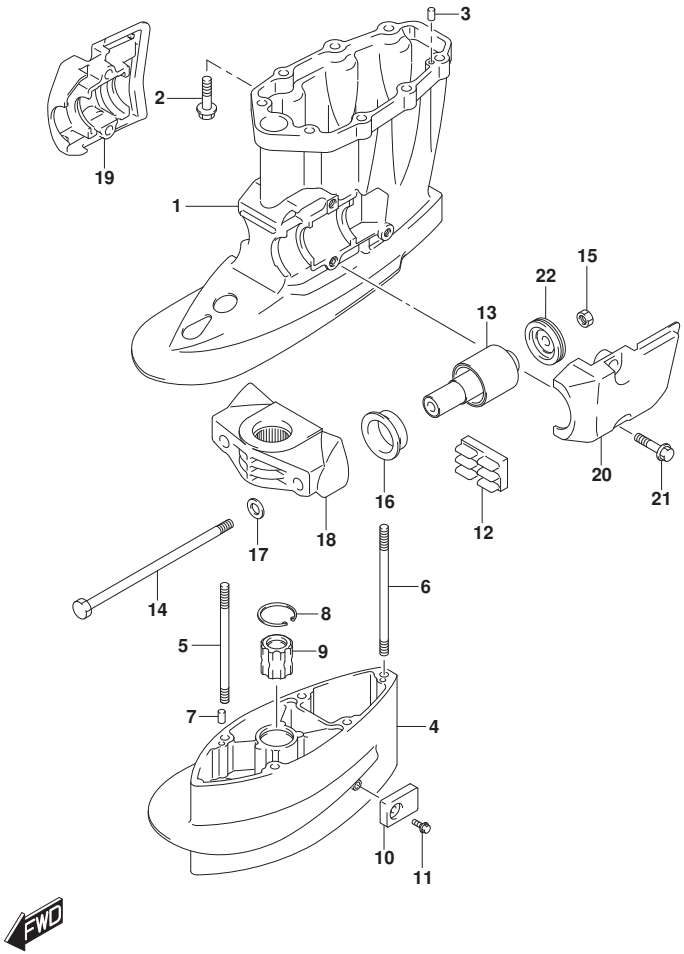

FIG.405A (1-I-15) DRIVE SHAFT HOUSING (DF70A)(DF90A)(DF100B)

REF NO.	PART NO.	DESCRIPTION	Q'TY	REMARKS
20-1	54231-87L00-YAY	COVER, LOWER MOUNT PORT (BLACK)	1	
20-2	54231-87L00-Y5S	COVER, LOWER MOUNT PORT (WHITE)	1	
21	09116-10181	BOLT (10X44)	4	
22	54180-88L01	DAMPER, FWD STOPPER	2	

DF70A E01
DF70A E40
DF90A E01
DF90A E40
DF100B E01
DF100B E40

FIG.405B

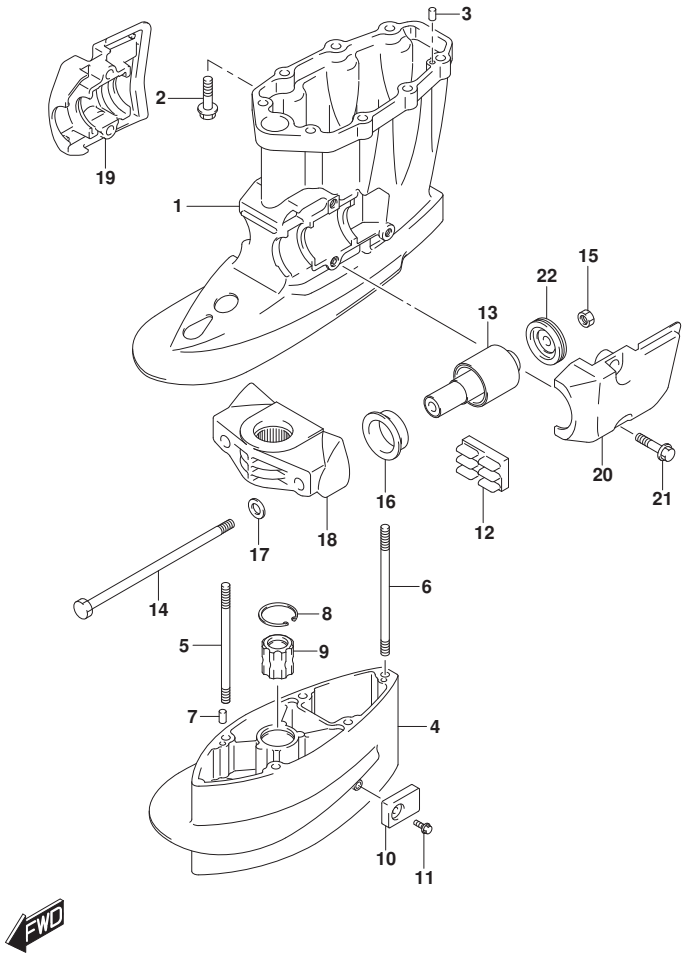

FIG.405B (1-J-2) DRIVE SHAFT HOUSING (DF80A)

REF NO.	PART NO.	DESCRIPTION	Q'TY	REMARKS
1	52111-87L00-YAY	HOUSING, DRIVE SHAFT (BLACK)	1	
2	09116-10181	BOLT (10X44)	8	
3	09202-08006	PIN (8X12)	2	
4	52131-87L00-YAY	CASE, EXTENSION (BLACK)	1	W/TRANSOM(X)
5	09108-10115	STUD BOLT	4	W/TRANSOM(X)
6	09108-10157	STUD BOLT	1	W/TRANSOM(X)
7	09202-08006	PIN (8X12)	2	W/TRANSOM(X)
8	09381-40005	CIRCLIP	1	W/TRANSOM(X)
9	57130-87E02	BUSH, DRIVE SHAFT	1	W/TRANSOM(X)
10	55321-93J01	ANODE, PROTECTION	1	W/TRANSOM(X)
11	09116-06236	BOLT (6X16)	1	W/TRANSOM(X)
12	54151-87L01	MOUNT, LOWER THRUST	1	
13	54160-87L10	MOUNT, LOWER	2	
14	54166-95J02	BOLT, LOWER MOUNT	2	
15	09159-12014	NUT	2	
16	54167-87L10	MOUNT, FWD LOWER SIDE	2	
17	54114-90J10	WASHER, LOWER MOUNT BOLT	2	
18	54211-90J01-YAY	BRACKET, LOWER MOUNT (BLACK)	1	
19	54221-87L00-YAY	COVER, LOWER MOUNT STBD (BLACK)	1	
20	54231-87L00-YAY	COVER, LOWER MOUNT PORT (BLACK)	1	
21	09116-10181	BOLT (10X44)	4	
22	54180-88L01	DAMPER, FWD STOPPER	2	

DF80A E01
DF80A E40

FIG.405C

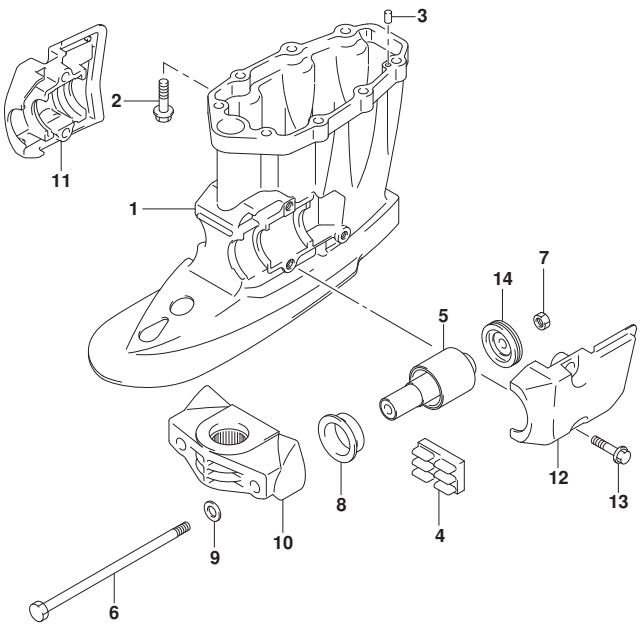

FIG.405C (1-J-3) DRIVE SHAFT HOUSING (DF70ATH E01)(DF90ATH E01)

REF NO.	PART NO.	DESCRIPTION	Q'TY	REMARKS
1	52111-87L00-YAY	HOUSING, DRIVE SHAFT (BLACK)	1	
2	09116-10181	BOLT (10X44)	8	
3	09202-08006	PIN (8X12)	2	
4	54151-87L01	MOUNT, LOWER THRUST	1	
5	54160-87L10	MOUNT, LOWER	2	
6	54166-95J02	BOLT, LOWER MOUNT	2	
7	09159-12014	NUT	2	
8	54167-87L10	MOUNT, FWD LOWER SIDE	2	
9	54114-90J10	WASHER, LOWER MOUNT BOLT	2	
10	54211-90J01-YAY	BRACKET, LOWER MOUNT (BLACK)	1	
11	54221-87L00-YAY	COVER, LOWER MOUNT STBD (BLACK)	1	
12	54231-87L00-YAY	COVER, LOWER MOUNT PORT (BLACK)	1	
13	09116-10181	BOLT (10X44)	4	
14	54180-88L01	DAMPER, FWD STOPPER	2	

DF70ATH E01
DF90ATH E01

FIG.405D

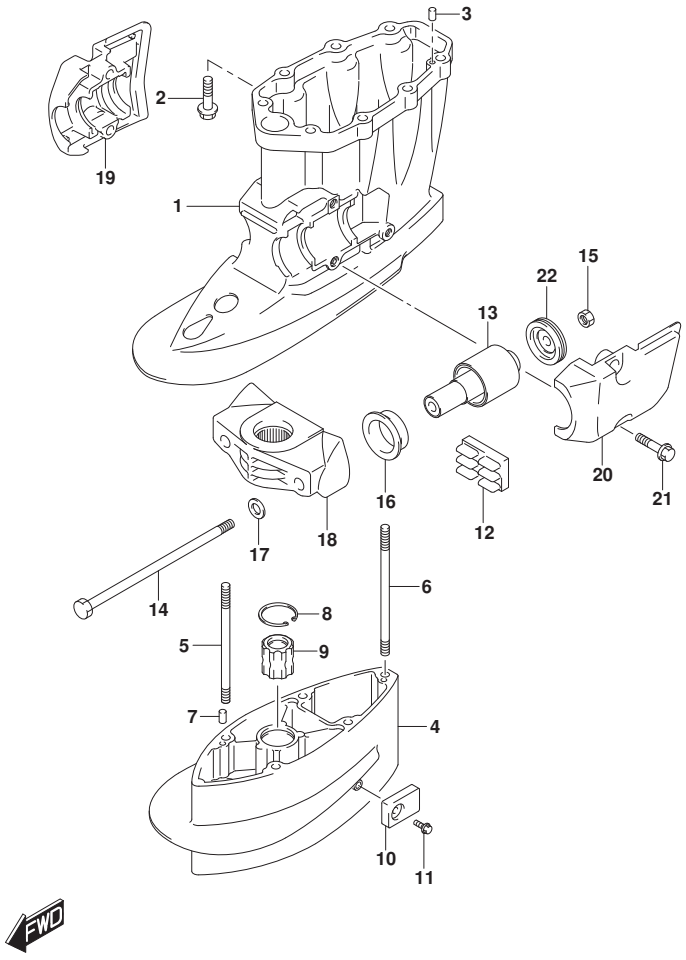

FIG.405D (1-J-4) DRIVE SHAFT HOUSING (DF70ATH E40)(DF90ATH E40)(DF90AWQH E4

REF NO.	PART NO.	DESCRIPTION	Q'TY	REMARKS
1	52111-87L00-YAY	HOUSING, DRIVE SHAFT (BLACK)	1	
2	09116-10181	BOLT (10X44)	8	
3	09202-08006	PIN (8X12)	2	
4	52131-87L00-YAY	CASE, EXTENSION (BLACK)	1	W/TRANSOM(X)
5	09108-10115	STUD BOLT	4	W/TRANSOM(X)
6	09108-10157	STUD BOLT	1	W/TRANSOM(X)
7	09202-08006	PIN (8X12)	2	W/TRANSOM(X)
8	09381-40005	CIRCLIP	1	W/TRANSOM(X)
9	57130-87E02	BUSH, DRIVE SHAFT	1	W/TRANSOM(X)
10	55321-93J01	ANODE, PROTECTION	1	W/TRANSOM(X)
11	09116-06236	BOLT (6X16)	1	W/TRANSOM(X)
12	54151-87L01	MOUNT, LOWER THRUST	1	
13	54160-87L10	MOUNT, LOWER	2	
14	54166-95J02	BOLT, LOWER MOUNT	2	
15	09159-12014	NUT	2	
16	54167-87L10	MOUNT, FWD LOWER SIDE	2	
17	54114-90J10	WASHER, LOWER MOUNT BOLT	2	
18	54211-90J01-YAY	BRACKET, LOWER MOUNT (BLACK)	1	
19	54221-87L00-YAY	COVER, LOWER MOUNT STBD (BLACK)	1	
20	54231-87L00-YAY	COVER, LOWER MOUNT PORT (BLACK)	1	
21	09116-10181	BOLT (10X44)	4	
22	54180-88L01	DAMPER, FWD STOPPER	2	

DF70ATH E40
DF90ATH E40
DF90AWQH E40

FIG.407A

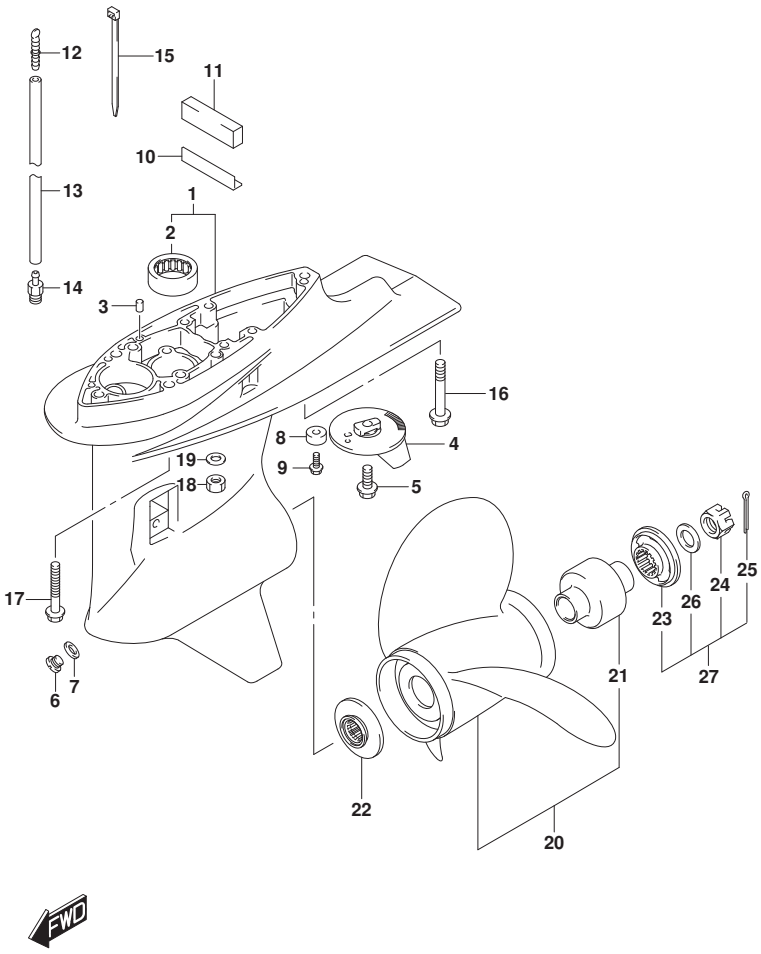

FIG.407A (1-J-5) GEAR CASE (DF70A)(DF90A)(DF100B)

REF NO.	PART NO.	DESCRIPTION	Q'TY	REMARKS
1-1	55110-87L32-YAY	CASE, GEAR (BLACK)	1	
1-2	55110-87L32-Y5S	CASE, GEAR (WHITE)	1	
2	09263-26023	.BEARING (26X34X30)	1	
3	09202-08006	PIN (8X12)	2	
4	55125-90J01	TAB, TRIM	1	
5	09116-08137	BOLT (8X22)	1	
6	09248-10008	PLUG (10X7.5)	2	
7	09168-10022	GASKET (10X17X1.5)	2	
8-1	55321-87J01	ANODE, PROTECTION	1	
8-2	55321-87J11	ANODE (MAGNESIUM)	1	OPT
9	09103-06281	BOLT (6X14)	1	
10	55333-87L00	PLATE, EXHAUST SEAL	1	
11	52332-87L10	SEAL, EXH TUBE HOUSING	1	
12	55127-87D00	UNION, SPEEDOMETER HOSE	1	
13	09355-40805-00B	HOSE (4X8X2000)	1	L:2000->1500
14	09362-09008	UNION	1	
15	09407-10404	CLAMP (L:100)	2	
16	09116-10137	BOLT (10X70)	1	W/TRANSOM(L)
17	09116-10150	BOLT (10X55)	4	W/TRANSOM(L)
18	09140-10031	NUT	5	W/TRANSOM(X)
19	09160-10141	WASHER (10.5X19X2)	5	W/TRANSOM(X)
20-1	58100-87LA0-019	PROPELLER (3X14X13)	1	
20-2	58100-87LB0-019	PROPELLER (3X13-7/8X15)	1	
20-3	58100-87LC0-019	PROPELLER (3X13-3/4X17)	1	
20-4	58100-87LD0-019	PROPELLER (3X13-3/4X19)	1	

FIG.407A

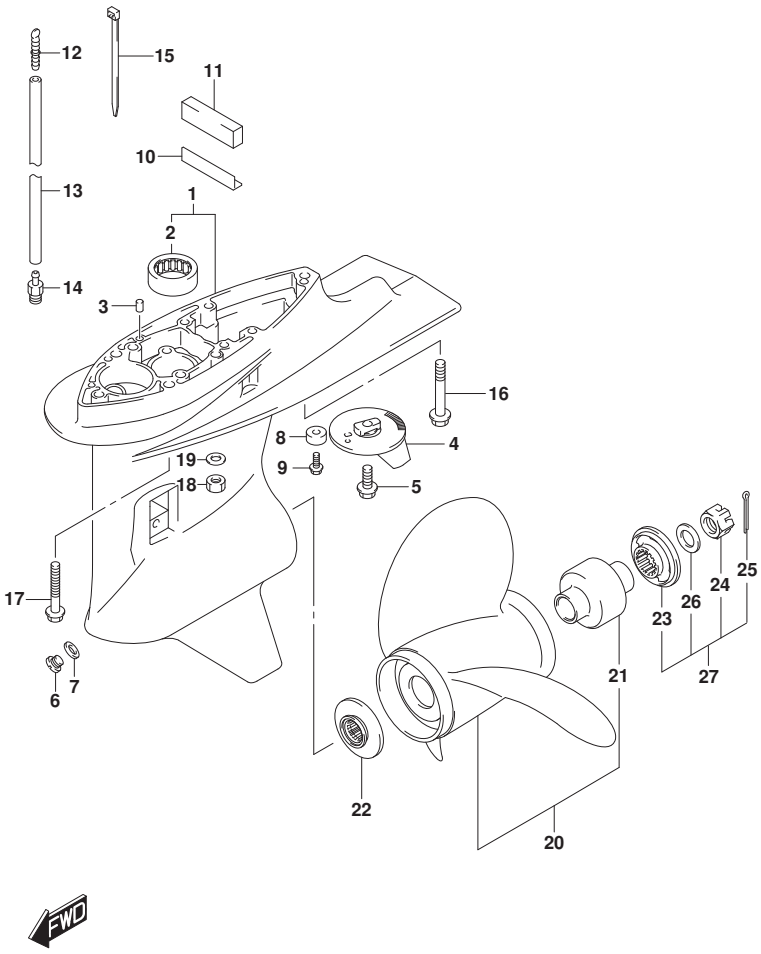

FIG.407A (1-J-6) GEAR CASE (DF70A)(DF90A)(DF100B)

REF NO.	PART NO.	DESCRIPTION	Q'TY	REMARKS
20-5	58100-87LE0-019	PROPELLER (3X13-3/4X21)	1	
20-6	58100-87LF0-019	PROPELLER (3X13.75X23)	1	
20-7	58100-90JA0-019	PROPELLER (3X14X17)	1	OPT
20-8	58100-90JB0-019	PROPELLER (3X14X19)	1	OPT
20-9	58100-90JC0-019	PROPELLER (3X14X21)	1	OPT
20-10	58100-90JD0-019	PROPELLER (3X14X23)	1	OPT
20-11	58100-90JE0-019	PROPELLER (3X13-1/2X15)	1	OPT
20-12	58200-92J40	PROPELLER (3X13-7/8X15)	1	OPT
				SUS
20-13	58200-92J50	PROPELLER (3X13-7/8X17)	1	OPT
				SUS
20-14	58200-92J60	PROPELLER (3X13-7/8X19)	1	OPT
				SUS
20-15	58200-92J70	PROPELLER (3X13-7/8X21)	1	OPT
				SUS
20-16	58200-92J80	PROPELLER (3X13-7/8X23)	1	OPT
				SUS
20-17	58200-92J90	PROPELLER (3X13-7/8X25)	1	OPT
				SUS
21	58105-90J00	.BUSH	1	
22	57632-87L01	STOPPER, PROPELLER BUSH	1	
23	57633-90J02	SPACER, PROPELLER NUT	1	
24	09141-18005	NUT	1	
25	09204-03003	COTTER PIN (D:3.6,L:25)	1	
26	09160-18028	WASHER (18.5X31X1)	1	

DF90A_E01_020_407A
GEAR CASE

FIG.407A

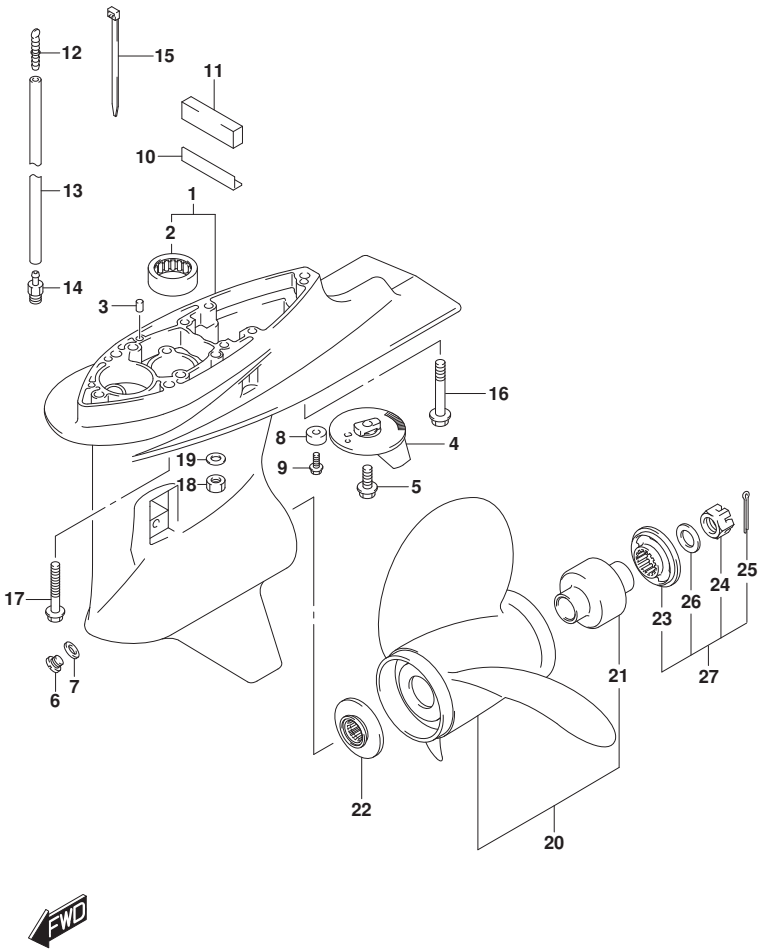

FIG.407A (1-J-7) GEAR CASE (DF70A)(DF90A)(DF100B)

REF NO.	PART NO.	DESCRIPTION	Q'TY	REMARKS
27	57630-90J00	KIT, PROPELLER NUT	1	OPT
28	25700-87L00	SEALING KIT, GEAR CASE	1	OPT
				NOT ILLUSTRATED

DF70A E01
DF70A E40
DF90A E01
DF90A E40
DF100B E01
DF100B E40

DF90A_E01_020_407A
GEAR CASE

FIG.407B

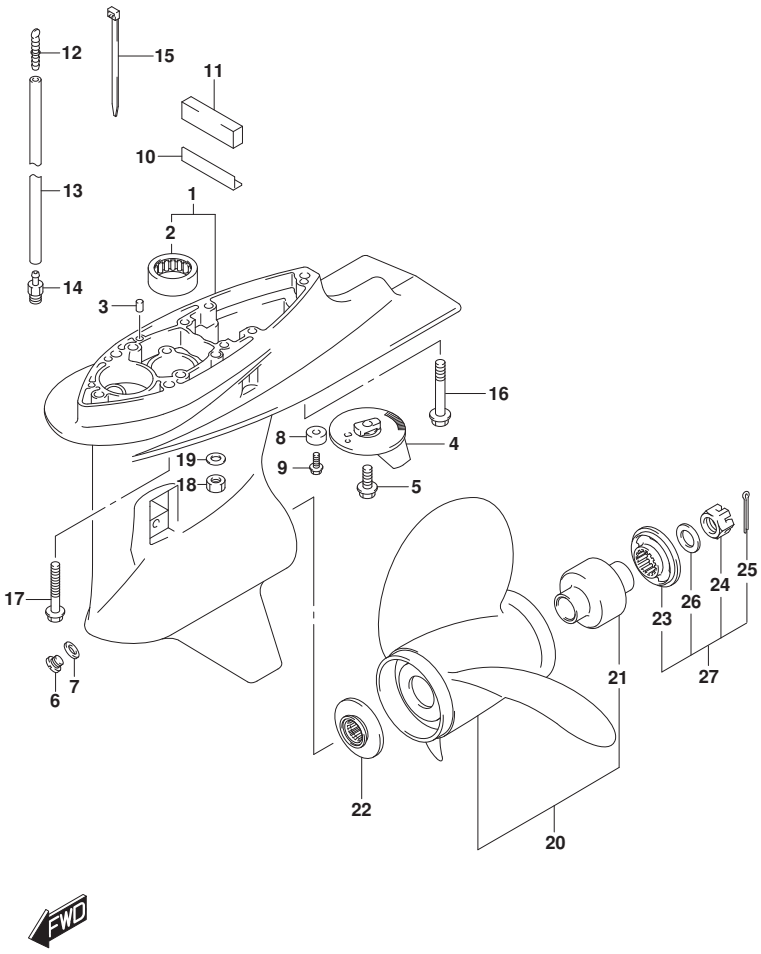

FIG.407B (1-J-8) GEAR CASE (DF80A)

REF NO.	PART NO.	DESCRIPTION	Q'TY	REMARKS
1	55110-87L32-YAY	CASE, GEAR (BLACK)	1	
2	09263-26023	.BEARING (26X34X30)	1	
3	09202-08006	PIN (8X12)	2	
4	55125-90J01	TAB, TRIM	1	
5	09116-08137	BOLT (8X22)	1	
6	09248-10008	PLUG (10X7.5)	2	
7	09168-10022	GASKET (10X17X1.5)	2	
8-1	55321-87J01	ANODE, PROTECTION	1	
8-2	55321-87J11	ANODE (MAGNESIUM)	1	OPT
9	09103-06281	BOLT (6X14)	1	
10	55333-87L00	PLATE, EXHAUST SEAL	1	
11	52332-87L10	SEAL, EXH TUBE HOUSING	1	
12	55127-87D00	UNION, SPEEDOMETER HOSE	1	
13	09355-40805-00B	HOSE (4X8X2000)	1	L:2000->1500
14	09362-09008	UNION	1	
15	09407-10404	CLAMP (L:100)	2	
16	09116-10137	BOLT (10X70)	1	W/TRANSOM(L)
17	09116-10150	BOLT (10X55)	4	W/TRANSOM(L)
18	09140-10031	NUT	5	W/TRANSOM(X)
19	09160-10141	WASHER (10.5X19X2)	5	W/TRANSOM(X)
20-1	58100-87LA0-019	PROPELLER (3X14X13)	1	
20-2	58100-87LB0-019	PROPELLER (3X13-7/8X15)	1	
20-3	58100-87LC0-019	PROPELLER (3X13-3/4X17)	1	
20-4	58100-87LD0-019	PROPELLER (3X13-3/4X19)	1	
20-5	58100-87LE0-019	PROPELLER (3X13-3/4X21)	1	

FIG.407B

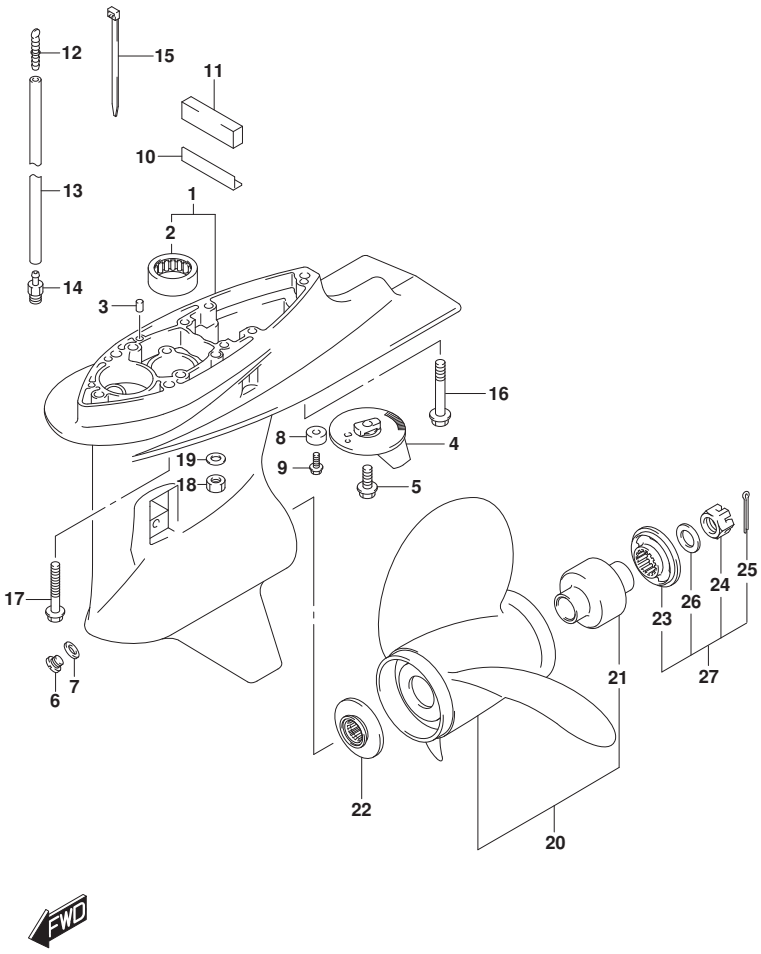

FIG.407B (1-J-9) GEAR CASE (DF80A)

REF NO.	PART NO.	DESCRIPTION	Q'TY	REMARKS
20-6	58100-87LF0-019	PROPELLER (3X13.75X23)	1	
20-7	58100-90JA0-019	PROPELLER (3X14X17)	1	OPT
20-8	58100-90JB0-019	PROPELLER (3X14X19)	1	OPT
20-9	58100-90JC0-019	PROPELLER (3X14X21)	1	OPT
20-10	58100-90JD0-019	PROPELLER (3X14X23)	1	OPT
20-11	58100-90JE0-019	PROPELLER(3X13-1/2X15)	1	OPT
20-12	58200-92J40	PROPELLER (3X13-7/8X15)	1	OPT
				SUS
20-13	58200-92J50	PROPELLER (3X13-7/8X17)	1	OPT
				SUS
20-14	58200-92J60	PROPELLER (3X13-7/8X19)	1	OPT
				SUS
20-15	58200-92J70	PROPELLER (3X13-7/8X21)	1	OPT
				SUS
20-16	58200-92J80	PROPELLER (3X13-7/8X23)	1	OPT
				SUS
20-17	58200-92J90	PROPELLER (3X13-7/8X25)	1	OPT
				SUS
21	58105-90J00	.BUSH	1	
22	57632-87L01	STOPPER, PROPELLER BUSH	1	
23	57633-90J02	SPACER, PROPELLER NUT	1	
24	09141-18005	NUT	1	
25	09204-03003	COTTER PIN (D:3.6,L:25)	1	
26	09160-18028	WASHER (18.5X31X1)	1	
27	57630-90J00	KIT, PROPELLER NUT	1	OPT
28	25700-87L00	SEALING KIT, GEAR CASE	1	OPT
				NOT ILLUSTRATED

DF80A E01
DF80A E40

DF90A_E01_020_407B
GEAR CASE

FIG.407C

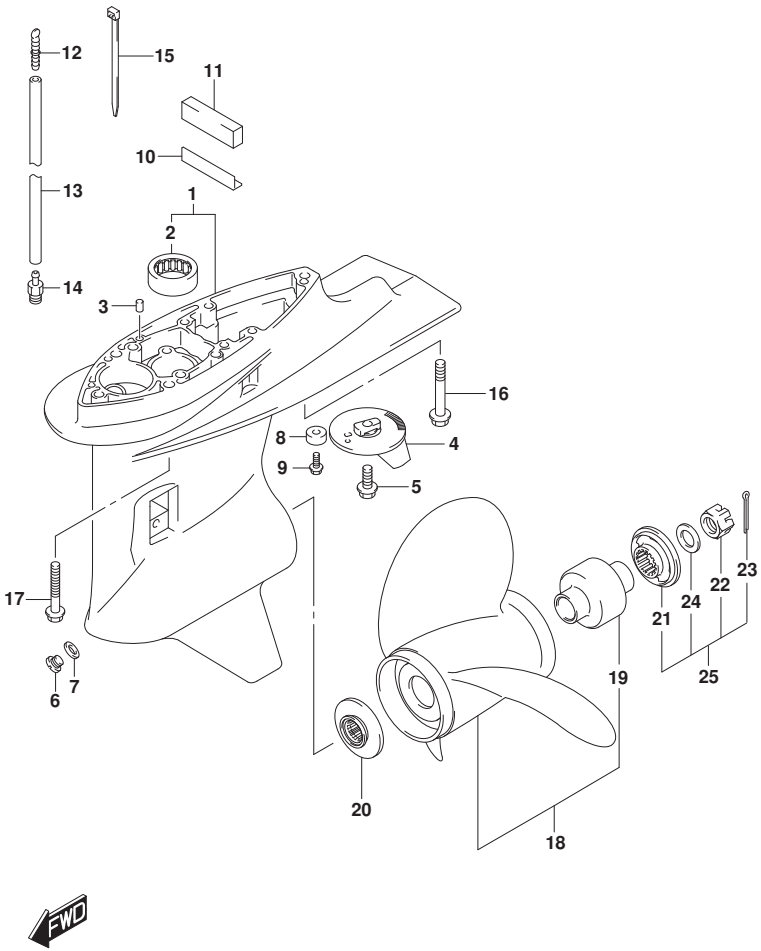

FIG.407C (1-J-10) GEAR CASE (DF70ATH E01)(DF90ATH E01)

REF NO.	PART NO.	DESCRIPTION	Q'TY	REMARKS
1	55110-87L32-YAY	CASE, GEAR (BLACK)	1	
2	09263-26023	.BEARING (26X34X30)	1	
3	09202-08006	PIN (8X12)	2	
4	55125-90J01	TAB, TRIM	1	
5	09116-08137	BOLT (8X22)	1	
6	09248-10008	PLUG (10X7.5)	2	
7	09168-10022	GASKET (10X17X1.5)	2	
8-1	55321-87J01	ANODE, PROTECTION	1	
8-2	55321-87J11	ANODE (MAGNESIUM)	1	OPT
9	09103-06281	BOLT (6X14)	1	
10	55333-87L00	PLATE, EXHAUST SEAL	1	
11	52332-87L10	SEAL, EXH TUBE HOUSING	1	
12	55127-87D00	UNION, SPEEDOMETER HOSE	1	
13	09355-40805-00B	HOSE (4X8X2000)	1	L:2000->1500
14	09362-09008	UNION	1	
15	09407-10404	CLAMP (L:100)	2	
16	09116-10137	BOLT (10X70)	1	
17	09116-10150	BOLT (10X55)	4	
18-1	58100-87LA0-019	PROPELLER (3X14X13)	1	
18-2	58100-87LB0-019	PROPELLER (3X13-7/8X15)	1	
18-3	58100-87LC0-019	PROPELLER (3X13-3/4X17)	1	
18-4	58100-87LD0-019	PROPELLER (3X13-3/4X19)	1	
18-5	58100-87LE0-019	PROPELLER (3X13-3/4X21)	1	

FIG.407C

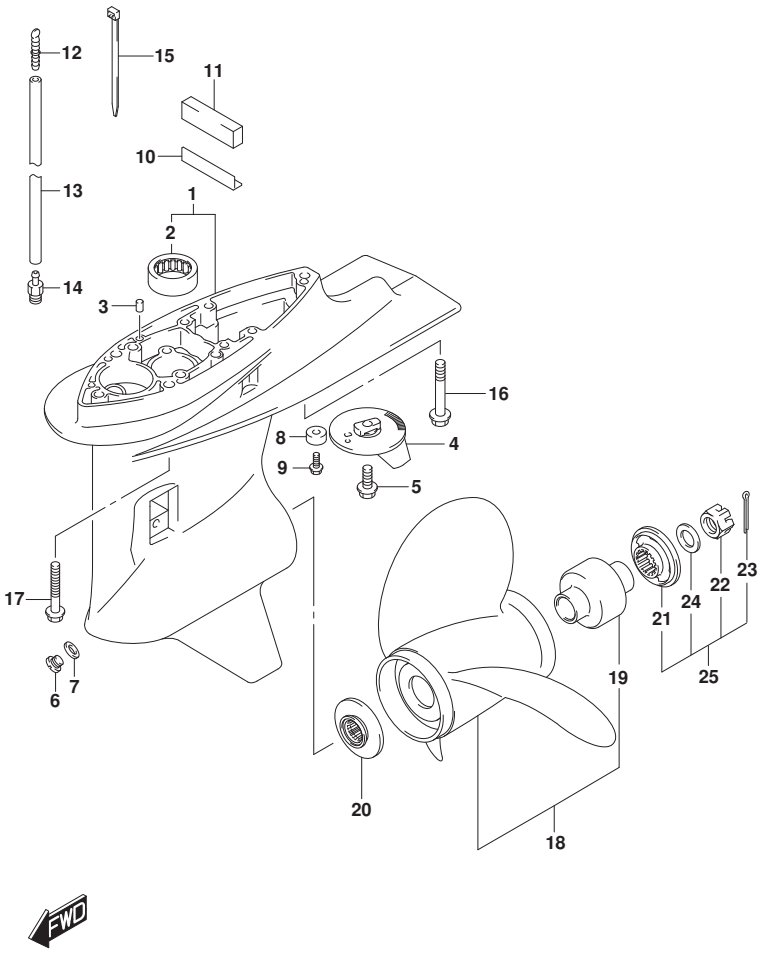

FIG.407C (1-J-11) GEAR CASE (DF70ATH E01)(DF90ATH E01)

REF NO.	PART NO.	DESCRIPTION	Q'TY	REMARKS
18-6	58100-87LF0-019	PROPELLER (3X13.75X23)	1	
18-7	58100-90JA0-019	PROPELLER (3X14X17)	1	OPT
18-8	58100-90JB0-019	PROPELLER (3X14X19)	1	OPT
18-9	58100-90JC0-019	PROPELLER (3X14X21)	1	OPT
18-10	58100-90JD0-019	PROPELLER (3X14X23)	1	OPT
18-11	58100-90JE0-019	PROPELLER (3X13-1/2X15)	1	OPT
18-12	58200-92J40	PROPELLER (3X13-7/8X15)	1	OPT
				SUS
18-13	58200-92J50	PROPELLER (3X13-7/8X17)	1	OPT
				SUS
18-14	58200-92J60	PROPELLER (3X13-7/8X19)	1	OPT
				SUS
18-15	58200-92J70	PROPELLER (3X13-7/8X21)	1	OPT
				SUS
18-16	58200-92J80	PROPELLER (3X13-7/8X23)	1	OPT
				SUS
18-17	58200-92J90	PROPELLER (3X13-7/8X25)	1	OPT
				SUS
19	58105-90J00	.BUSH	1	
20	57632-87L01	STOPPER, PROPELLER BUSH	1	
21	57633-90J02	SPACER, PROPELLER NUT	1	
22	09141-18005	NUT	1	
23	09204-03003	COTTER PIN (D:3.6,L:25)	1	
24	09160-18028	WASHER (18.5X31X1)	1	
25	57630-90J00	KIT, PROPELLER NUT	1	OPT
26	25700-87L00	SEALING KIT, GEAR CASE	1	OPT
				NOT ILLUSTRATED

DF70ATH E01
DF90ATH E01

FIG.407D

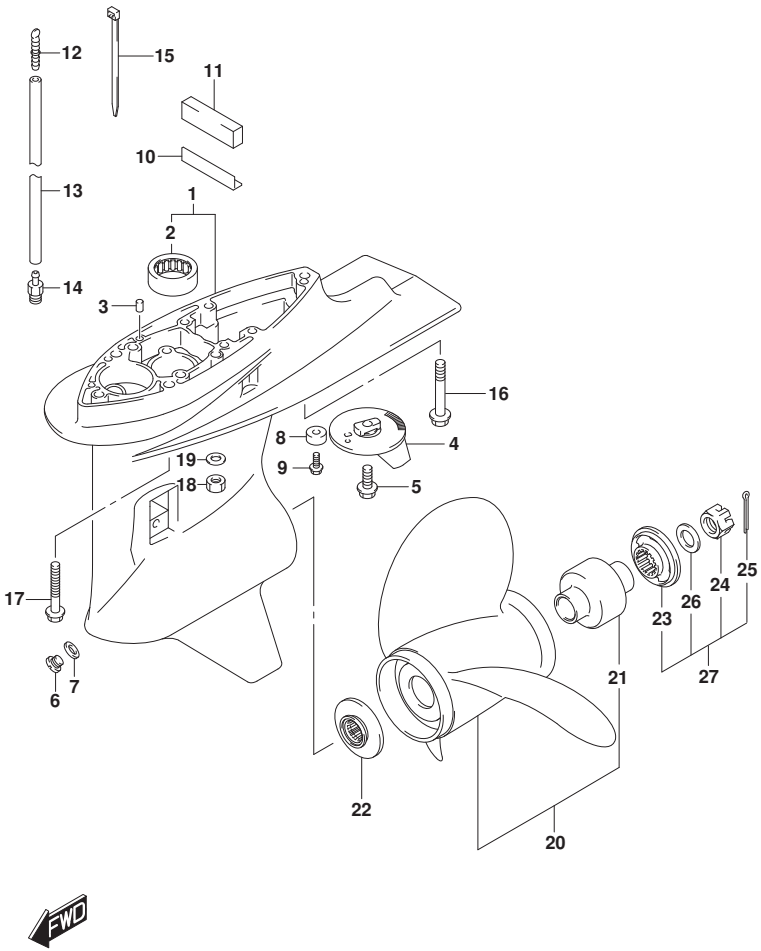

FIG.407D (1-J-12) GEAR CASE (DF70ATH E40)(DF90ATH E40)

REF NO.	PART NO.	DESCRIPTION	Q'TY	REMARKS
1	55110-87L32-YAY	CASE, GEAR (BLACK)	1	
2	09263-26023	.BEARING (26X34X30)	1	
3	09202-08006	PIN (8X12)	2	
4	55125-90J01	TAB, TRIM	1	
5	09116-08137	BOLT (8X22)	1	
6	09248-10008	PLUG (10X7.5)	2	
7	09168-10022	GASKET (10X17X1.5)	2	
8-1	55321-87J01	ANODE, PROTECTION	1	
8-2	55321-87J11	ANODE (MAGNESIUM)	1	OPT
9	09103-06281	BOLT (6X14)	1	
10	55333-87L00	PLATE, EXHAUST SEAL	1	
11	52332-87L10	SEAL, EXH TUBE HOUSING	1	
12	55127-87D00	UNION, SPEEDOMETER HOSE	1	
13	09355-40805-00B	HOSE (4X8X2000)	1	L:2000->1500
14	09362-09008	UNION	1	
15	09407-10404	CLAMP (L:100)	2	
16	09116-10137	BOLT (10X70)	1	W/TRANSOM(L)
17	09116-10150	BOLT (10X55)	4	W/TRANSOM(L)
18	09140-10031	NUT	5	W/TRANSOM(X)
19	09160-10141	WASHER (10.5X19X2)	5	W/TRANSOM(X)
20-1	58100-87LA0-019	PROPELLER (3X14X13)	1	
20-2	58100-87LB0-019	PROPELLER (3X13-7/8X15)	1	
20-3	58100-87LC0-019	PROPELLER (3X13-3/4X17)	1	
20-4	58100-87LD0-019	PROPELLER (3X13-3/4X19)	1	
20-5	58100-87LE0-019	PROPELLER (3X13-3/4X21)	1	

FIG.407D

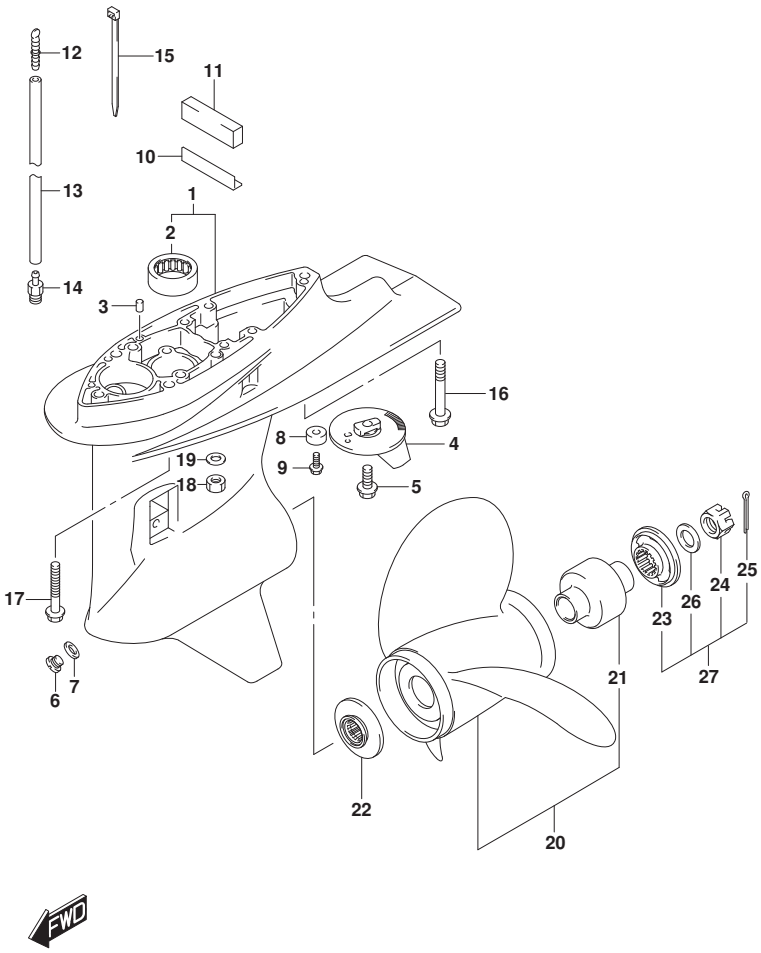

FIG.407D (1-J-13) GEAR CASE (DF70ATH E40)(DF90ATH E40)

REF NO.	PART NO.	DESCRIPTION	Q'TY	REMARKS
20-6	58100-87LF0-019	PROPELLER (3X13.75X23)	1	
20-7	58100-90JA0-019	PROPELLER (3X14X17)	1	OPT
20-8	58100-90JB0-019	PROPELLER (3X14X19)	1	OPT
20-9	58100-90JC0-019	PROPELLER (3X14X21)	1	OPT
20-10	58100-90JD0-019	PROPELLER (3X14X23)	1	OPT
20-11	58100-90JE0-019	PROPELLER(3X13-1/2X15)	1	OPT
20-12	58200-92J40	PROPELLER (3X13-7/8X15)	1	OPT
				SUS
20-13	58200-92J50	PROPELLER (3X13-7/8X17)	1	OPT
				SUS
20-14	58200-92J60	PROPELLER (3X13-7/8X19)	1	OPT
				SUS
20-15	58200-92J70	PROPELLER (3X13-7/8X21)	1	OPT
				SUS
20-16	58200-92J80	PROPELLER (3X13-7/8X23)	1	OPT
				SUS
20-17	58200-92J90	PROPELLER (3X13-7/8X25)	1	OPT
				SUS
21	58105-90J00	.BUSH	1	
22	57632-87L01	STOPPER, PROPELLER BUSH	1	
23	57633-90J02	SPACER, PROPELLER NUT	1	
24	09141-18005	NUT	1	
25	09204-03003	COTTER PIN (D:3.6,L:25)	1	
26	09160-18028	WASHER (18.5X31X1)	1	
27	57630-90J00	KIT, PROPELLER NUT	1	OPT
28	25700-87L00	SEALING KIT, GEAR CASE	1	OPT
				NOT ILLUSTRATED

DF70ATH E40
DF90ATH E40

DF90A_E01_020_407D
GEAR CASE

FIG.407E

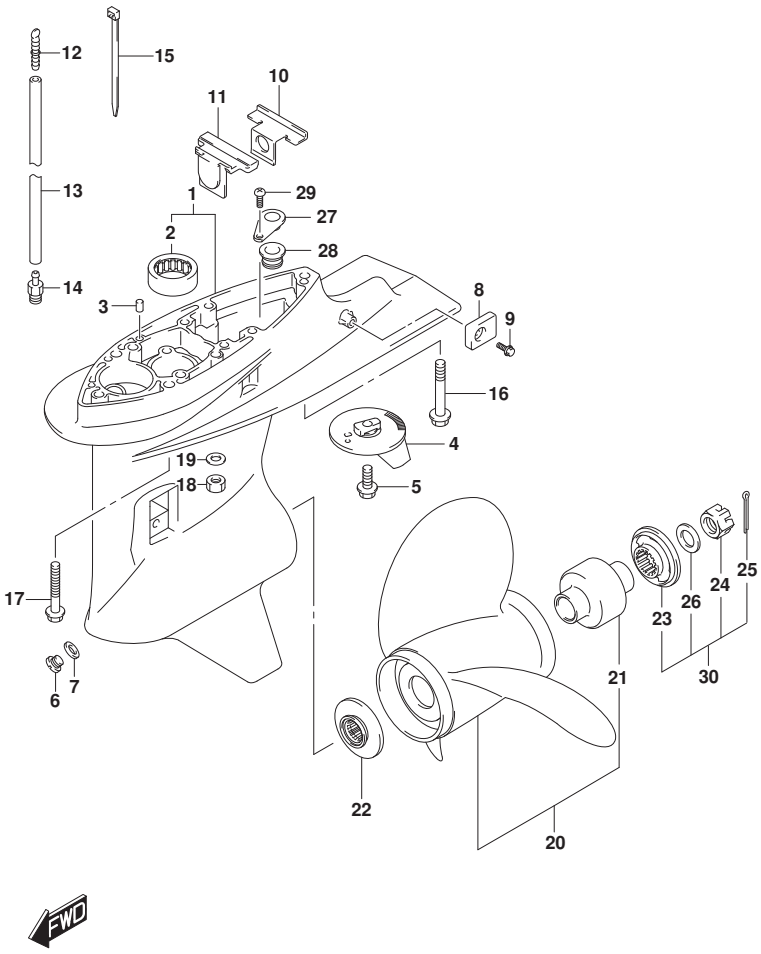

FIG.407E (1-J-14) GEAR CASE (DF90AWQH)

REF NO.	PART NO.	DESCRIPTION	Q'TY	REMARKS
1	55110-87L40-YAY	CASE, GEAR (BLACK)	1	
2	09263-26023	.BEARING (26X34X30)	1	
3	09202-08006	PIN (8X12)	2	
4	55125-90J01	TAB, TRIM	1	
5	09116-08137	BOLT (8X22)	1	
6	09248-10008	PLUG (10X7.5)	2	
7	09168-10022	GASKET (10X17X1.5)	2	
8-1	55321-93J01	ANODE, PROTECTION	1	
8-2	55321-87J11	ANODE (MAGNESIUM)	1	OPT
9	09116-06236	BOLT(6X16)	1	
10	55333-87L10	PLATE, EXHAUST SEAL	1	
11	55332-87L00	RUBBER,EXHAUST SEAL	1	
12	55127-87D00	UNION, SPEEDOMETER HOSE	1	
13	09355-40805-00B	HOSE (4X8X2000)	1	L:2000->1500
14	09362-09008	UNION	1	
15	09407-10404	CLAMP (L:100)	2	
16	09116-10137	BOLT (10X70)	1	W/TRANSOM(L)
17	09116-10150	BOLT (10X55)	4	W/TRANSOM(L)
18	09140-10031	NUT	5	W/TRANSOM(X)
19	09160-10141	WASHER (10.5X19X2)	5	W/TRANSOM(X)
20-1	58100-87LA0-019	PROPELLER (3X14X13)	1	
20-2	58100-87LB0-019	PROPELLER (3X13-7/8X15)	1	
20-3	58100-87LC0-019	PROPELLER (3X13-3/4X17)	1	
20-4	58100-87LD0-019	PROPELLER (3X13-3/4X19)	1	
20-5	58100-87LE0-019	PROPELLER (3X13-3/4X21)	1	

FIG.407E

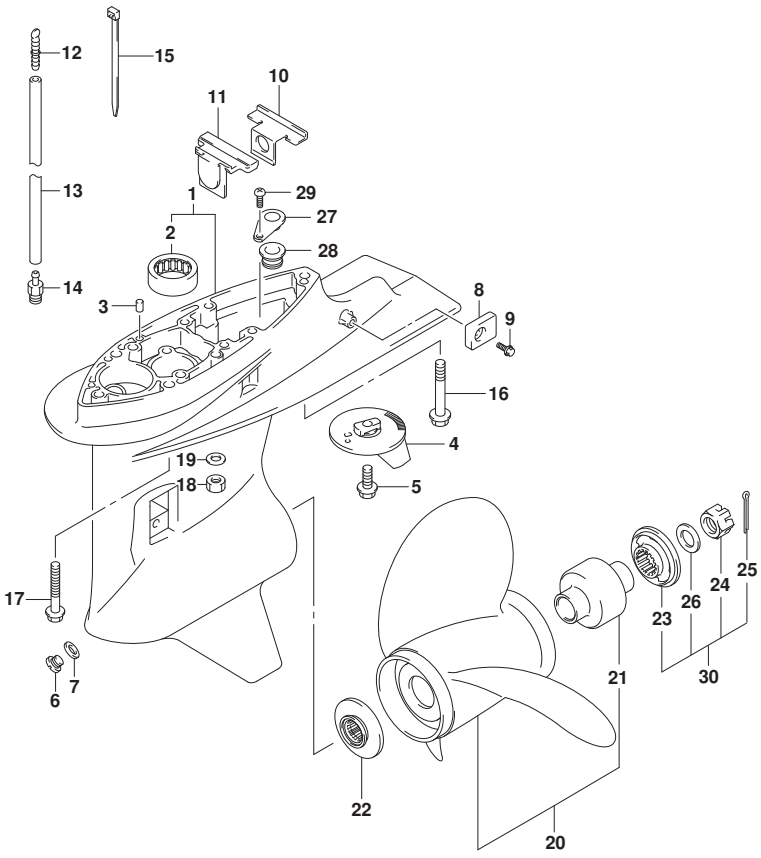

FIG.407E (1-J-15) GEAR CASE (DF90AWQH)

REF NO.	PART NO.	DESCRIPTION	Q'TY	REMARKS
20-6	58100-87LF0-019	PROPELLER (3X13.75X23)	1	
20-7	58100-90JA0-019	PROPELLER (3X14X17)	1	OPT
20-8	58100-90JB0-019	PROPELLER (3X14X19)	1	OPT
20-9	58100-90JC0-019	PROPELLER (3X14X21)	1	OPT
20-10	58100-90JD0-019	PROPELLER (3X14X23)	1	OPT
20-11	58100-90JE0-019	PROPELLER(3X13-1/2X15)	1	OPT
20-12	58200-92J40	PROPELLER (3X13-7/8X15)	1	OPT
				SUS
20-13	58200-92J50	PROPELLER (3X13-7/8X17)	1	OPT
				SUS
20-14	58200-92J60	PROPELLER (3X13-7/8X19)	1	OPT
				SUS
20-15	58200-92J70	PROPELLER (3X13-7/8X21)	1	OPT
				SUS
20-16	58200-92J80	PROPELLER (3X13-7/8X23)	1	OPT
				SUS
20-17	58200-92J90	PROPELLER (3X13-7/8X25)	1	OPT
				SUS
21	58105-90J00	.BUSH	1	
22	57632-87L01	STOPPER, PROPELLER BUSH	1	
23	57633-90J02	SPACER, PROPELLER NUT	1	
24	09141-18005	NUT	1	
25	09204-03003	COTTER PIN (D:3.6,L:25)	1	
26	09160-18028	WASHER (18.5X31X1)	1	
27	17570-87L00	CAP COMP,WATER SUB	1	W/TRANSOM(X)
28	17563-87D01	BUSH,WATER TUBE LOWER	1	W/TRANSOM(X)
29	09125-06124	SCREW,SUB WATER TUBE	1	
30	57630-90J00	KIT, PROPELLER NUT	1	OPT
31	25700-87L00	SEALING KIT, GEAR CASE	1	OPT
				NOT ILLUSTRATED

DF90AWQH E40

FIG.410A

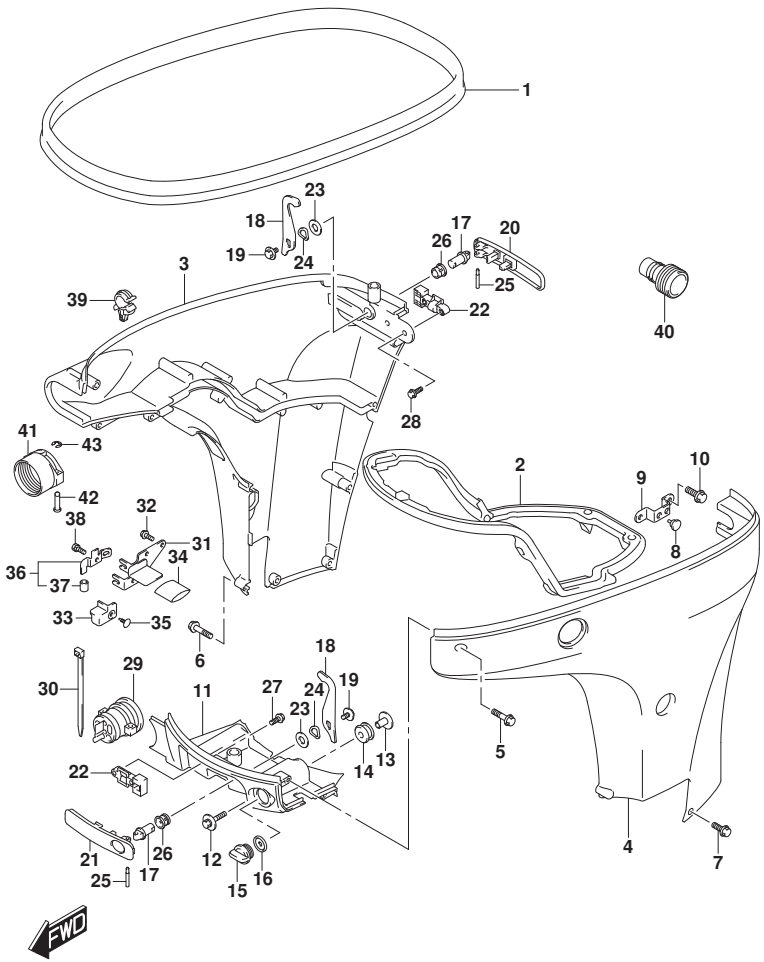

FIG.410A (1-K-2) SIDE COVER (DF70A)(DF90A)(DF100B)

REF NO.	PART NO.	DESCRIPTION	Q'TY	REMARKS
1	61112-99E01	RUBBER, SIDE COVER	1	
2	61134-87L01	SEAL, SIDE COVER	1	
3-1	61811-87L20-YAY	COVER, SIDE STBD (BLACK)	1	
3-2	61811-87L20-Y5S	COVER, SIDE STBD (WHITE)	1	
4-1	61821-87L21-YAY	COVER, SIDE PORT (BLACK)	1	
4-2	61821-87L21-Y5S	COVER, SIDE PORT (WHITE)	1	
5	09136-06148	SCREW (6X35)	8	
6	09136-06149	SCREW (6X55)	2	
7	09136-06161	SCREW (6X17)	3	
8	09321-08022	CUSHION	2	
9	61827-87L00	HOLDER, SIDE COVER	1	
10	01550-0820C	BOLT	2	
11-1	61831-87L20-YAY	PANEL, FRONT (BLACK)	1	
11-2	61831-87L20-Y5S	PANEL, FRONT (WHITE)	1	
12	09116-08174	BOLT (8X38)	2	
13	09169-08050	WASHER	2	
14	09320-11023	CUSHION	2	
15	17913-93J00	PLUG, WATER	1	
16	17914-93J01	GASKET, WATER PLUG	1	
17	61632-93J00	SHAFT, ENGINE COVER HOOK	2	
18	61641-87L00	HOOK, ENGINE COVER	2	
19	09116-06127	BOLT (6X12)	2	
20	61633-87L00	LEVER, HOOK REAR	1	
21	61645-87L00	LEVER, HOOK FRONT	1	
22	61673-93J11	LATCH, HOOK LEVER	2	

FIG.410A

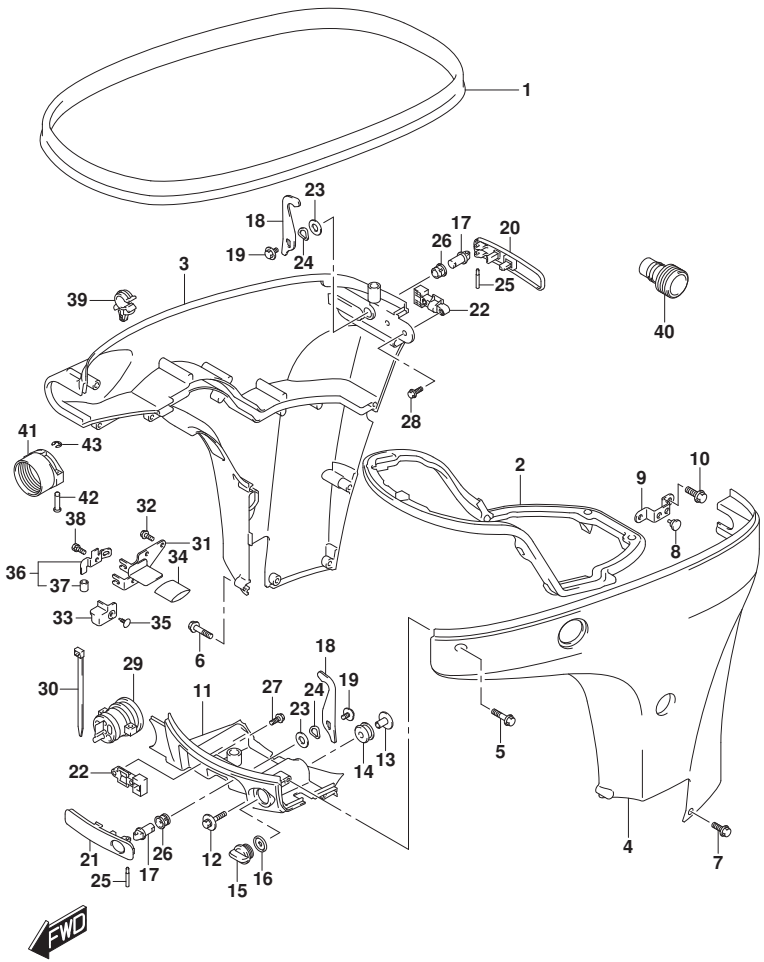

FIG.410A (1-K-3) SIDE COVER (DF70A)(DF90A)(DF100B)

REF NO.	PART NO.	DESCRIPTION	Q'TY	REMARKS
23	09160-13014	WASHER (13.2X25X1)	2	
24	09164-14008	WASHER	2	
25	09202-04022	PIN	2	
26	09306-13007	BUSH	2	
27	09103-05026	BOLT (5X10)	2	
28	09103-05027	BOLT (5X16)	2	
29	61124-87L20	GROMMET, REMOCON CABLE	1	
30	09407-25402	CLAMP (L:250)	1	
31	67341-87L00	HOLDER, REMOCON CABLE	1	
32	01550-0616C	BOLT	2	
33	67345-87L00	PROTECTOR	1	
34	67346-87L01	PROTECTOR, HOLDER	1	
35	09409-10304-5ES	CLIP (BLACK)	1	
36	67350-87L02	STOPPER, REMOCON CABLE	1	
37	09352-70104-600	.HOSE (7X10.2X600)	2	L:600->14
38	01570-06127	BOLT	1	
39	09403-11320	CLAMP	1	
40	17917-87L00	CONNECTOR, FLUSH WATER	1	
41	67361-90J10	ADAPTER, HOSE (RIGGING)	1	OPT
42	09208-06009	PIN, HOSE ADAPTER (RIGGING)	2	OPT
43	09383-04002	E RING	2	OPT

DF70A E01
DF70A E40
DF90A E01
DF90A E40
DF100B E01
DF100B E40

FIG.410B

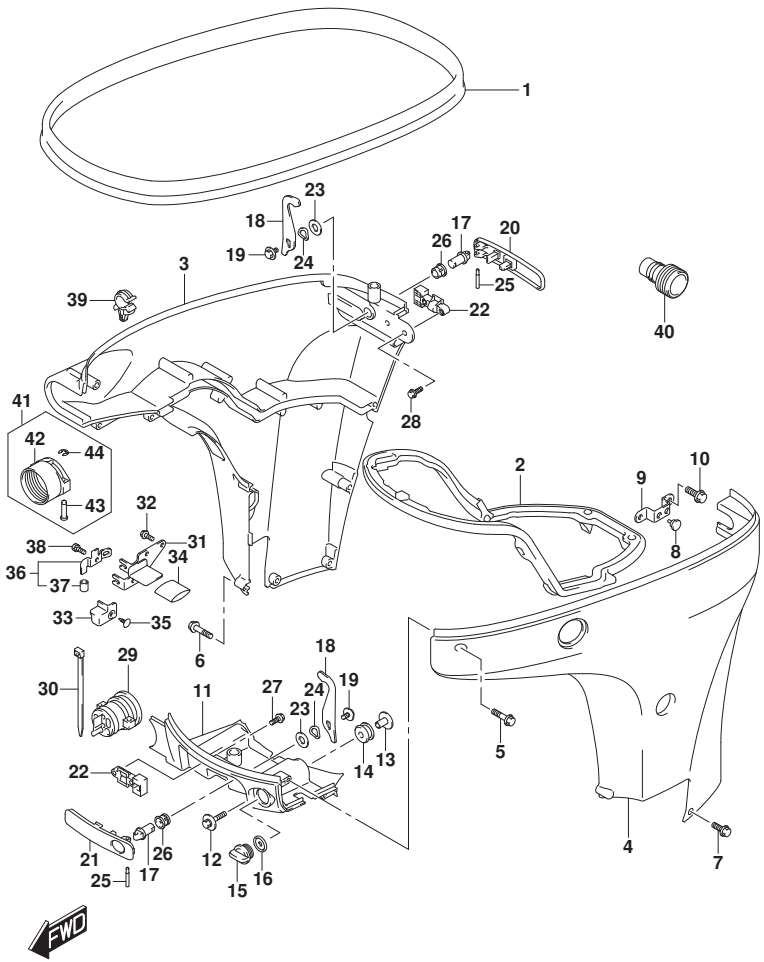

FIG.410B (1-K-4) SIDE COVER (DF70ATH)(DF90ATH)

REF NO.	PART NO.	DESCRIPTION	Q'TY	REMARKS
1	61112-99E01	RUBBER, SIDE COVER	1	
2	61134-87L01	SEAL, SIDE COVER	1	
3	61811-87L20-YAY	COVER, SIDE STBD (BLACK)	1	
4	61821-87L21-YAY	COVER, SIDE PORT (BLACK)	1	
5	09136-06148	SCREW (6X35)	8	
6	09136-06149	SCREW (6X55)	2	
7	09136-06161	SCREW (6X17)	3	
8	09321-08022	CUSHION	2	
9	61827-87L00	HOLDER, SIDE COVER	1	
10	01550-0820C	BOLT	2	
11	61831-87L20-YAY	PANEL, FRONT (BLACK)	1	
12	09116-08174	BOLT (8X38)	2	
13	09169-08050	WASHER	2	
14	09320-11023	CUSHION	2	
15	17913-93J00	PLUG, WATER	1	
16	17914-93J01	GASKET, WATER PLUG	1	
17	61632-93J00	SHAFT, ENGINE COVER HOOK	2	
18	61641-87L00	HOOK, ENGINE COVER	2	
19	09116-06127	BOLT (6X12)	2	
20	61633-87L00	LEVER, HOOK REAR	1	
21	61645-87L00	LEVER, HOOK FRONT	1	
22	61673-93J11	LATCH, HOOK LEVER	2	
23	09160-13014	WASHER (13.2X25X1)	2	
24	09164-14008	WASHER	2	
25	09202-04022	PIN	2	
26	09306-13007	BUSH	2	
27	09103-05026	BOLT (5X10)	2	

FIG.410B

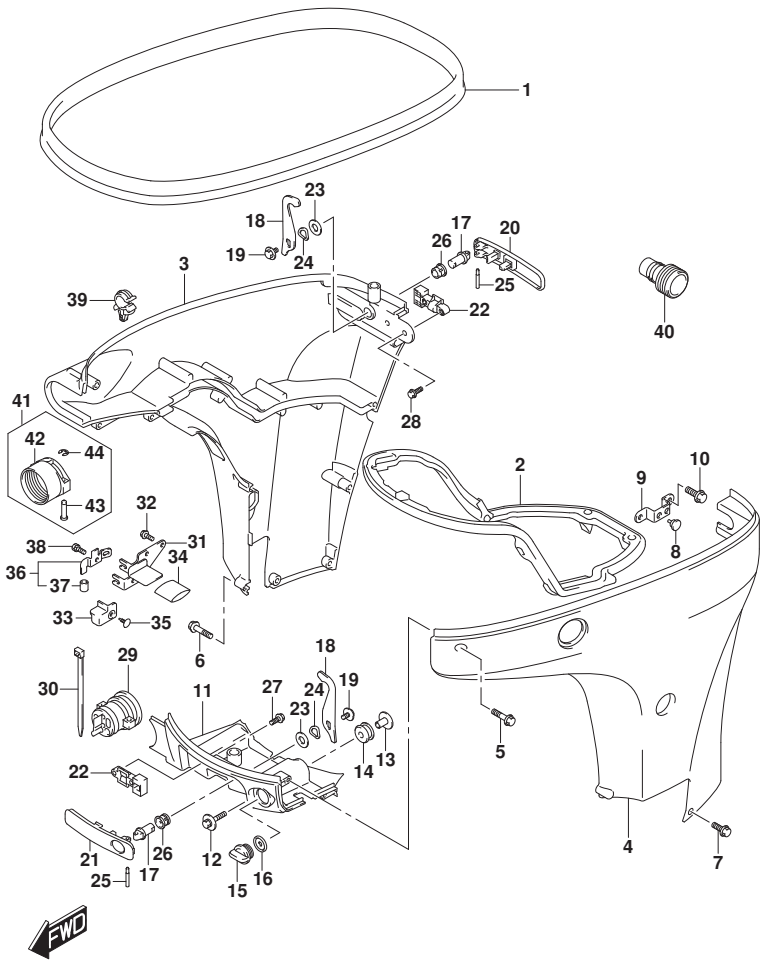

FIG.410B (1-K-5) SIDE COVER (DF70ATH)(DF90ATH)

REF NO.	PART NO.	DESCRIPTION	Q'TY	REMARKS
28	09103-05027	BOLT (5X16)	2	
29	61124-87L20	GROMMET, REMOCON CABLE	1	
30	09407-25402	CLAMP (L:250)	1	
31	67341-87L00	HOLDER, REMOCON CABLE	1	
32	01550-0616C	BOLT	2	
33	67345-87L00	PROTECTOR	1	
34	67346-87L01	PROTECTOR, HOLDER	1	
35	09409-10304-5ES	CLIP (BLACK)	1	
36	67350-87L02	STOPPER, REMOCON CABLE	1	
37	09352-70104-600	.HOSE (7X10.2X600)	2	L:600->14
38	01570-06127	BOLT	1	
39	09403-11320	CLAMP	1	
40	17917-87L00	CONNECTOR, FLUSH WATER	1	
41	67300-98J10	KIT, HOSE ADAPTER (RIGGING)	1	OPT
42	67361-90J10	.ADAPTER, HOSE (RIGGING)	1	OPT
43	09208-06009	.PIN, HOSE ADAPTER (RIGGING)	2	OPT
44	09383-04002	.E RING	2	OPT

DF70ATH E01
DF70ATH E40
DF90ATH E01
DF90ATH E40

FIG.410C

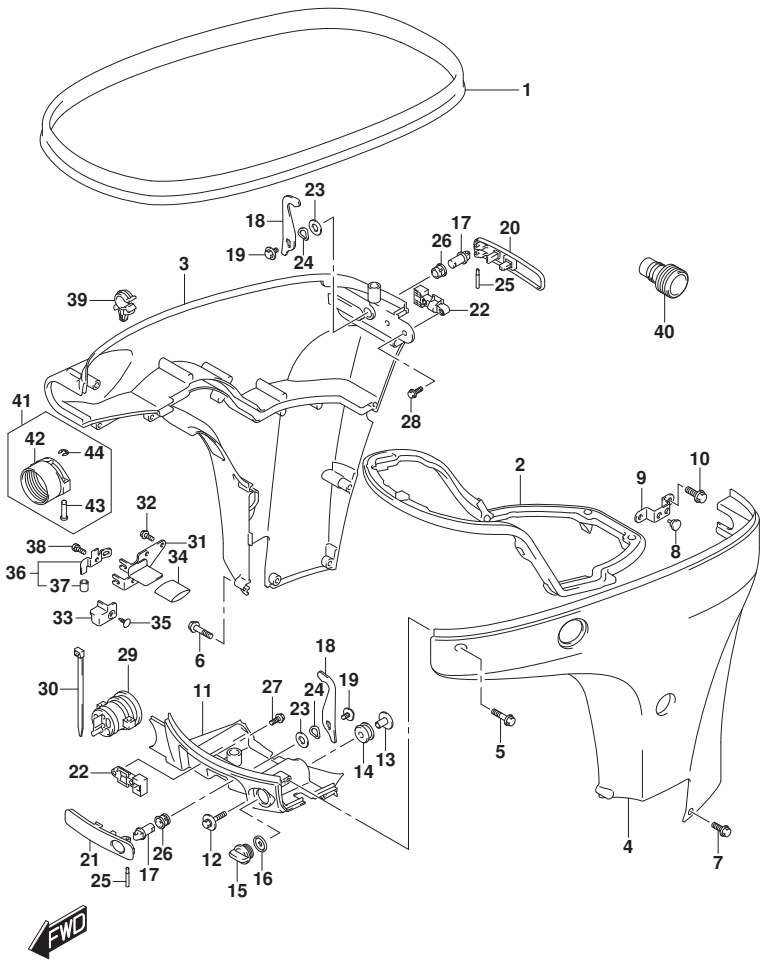

FIG.410C (1-K-6) SIDE COVER (DF90AWQH)

REF NO.	PART NO.	DESCRIPTION	Q'TY	REMARKS
1	61112-99E01	RUBBER, SIDE COVER	1	
2	61134-87L01	SEAL, SIDE COVER	1	
3	61811-87L20-YAY	COVER, SIDE STBD (BLACK)	1	
4	61821-87L30-YAY	COVER, SIDE PORT (BLACK)	1	
5	09136-06148	SCREW (6X35)	8	
6	09136-06149	SCREW (6X55)	2	
7	09136-06161	SCREW (6X17)	3	
8	09321-08022	CUSHION	2	
9	61827-87L00	HOLDER, SIDE COVER	1	
10	01550-0820C	BOLT	2	
11	61831-87L20-YAY	PANEL, FRONT (BLACK)	1	
12	09116-08174	BOLT (8X38)	2	
13	09169-08050	WASHER	2	
14	09320-11023	CUSHION	2	
15	17913-93J00	PLUG, WATER	1	
16	17914-93J01	GASKET, WATER PLUG	1	
17	61632-93J00	SHAFT, ENGINE COVER HOOK	2	
18	61641-87L00	HOOK, ENGINE COVER	2	
19	09116-06127	BOLT (6X12)	2	
20	61633-87L00	LEVER, HOOK REAR	1	
21	61645-87L00	LEVER, HOOK FRONT	1	
22	61673-93J11	LATCH, HOOK LEVER	2	
23	09160-13014	WASHER (13.2X25X1)	2	
24	09164-14008	WASHER	2	
25	09202-04022	PIN	2	
26	09306-13007	BUSH	2	
27	09103-05026	BOLT (5X10)	2	

FIG.410C

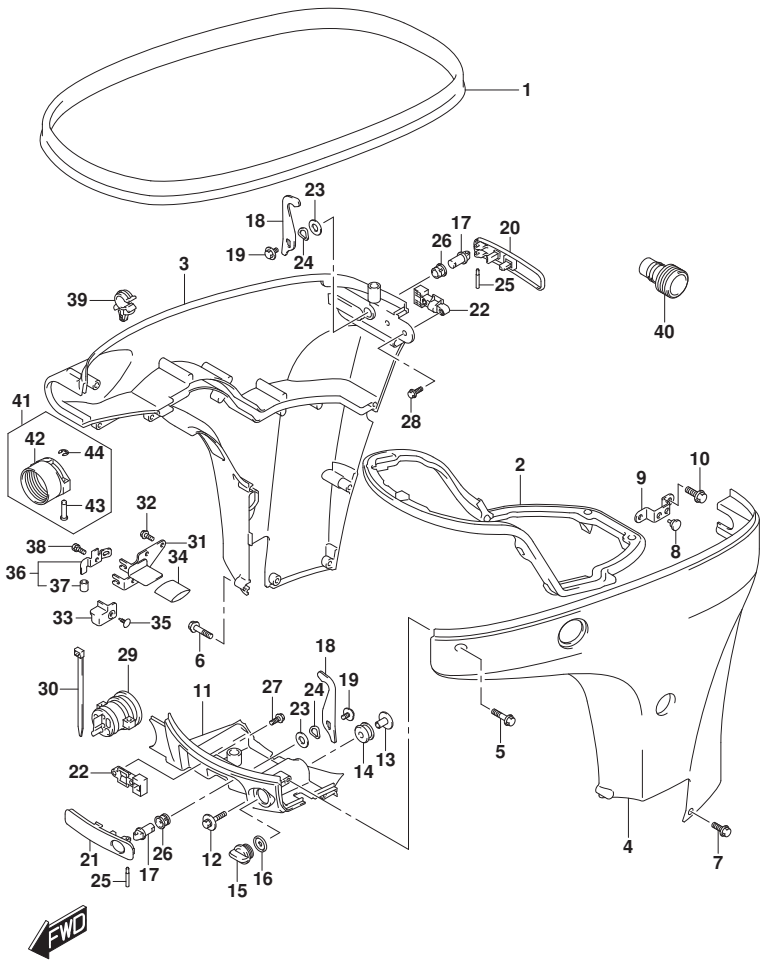

FIG.410C (1-K-7) SIDE COVER (DF90AWQH)

REF NO.	PART NO.	DESCRIPTION	Q'TY	REMARKS
28	09103-05027	BOLT (5X16)	2	
29	61124-87L20	GROMMET, REMOCON CABLE	1	
30	09407-25402	CLAMP (L:250)	1	
31	67341-87L00	HOLDER, REMOCON CABLE	1	
32	01550-0616C	BOLT	2	
33	67345-87L00	PROTECTOR	1	
34	67346-87L01	PROTECTOR, HOLDER	1	
35	09409-10304-5ES	CLIP (BLACK)	1	
36	67350-87L02	STOPPER, REMOCON CABLE	1	
37	09352-70104-600	.HOSE (7X10.2X600)	2	L:600->14
38	01570-06127	BOLT	1	
39	09403-11320	CLAMP	1	
40	17917-87L00	CONNECTOR, FLUSH WATER	1	
41	67300-98J10	KIT, HOSE ADAPTER (RIGGING)	1	OPT
42	67361-90J10	.ADAPTER, HOSE (RIGGING)	1	OPT
43	09208-06009	.PIN, HOSE ADAPTER (RIGGING)	2	OPT
44	09383-04002	.E RING	2	OPT

DF90AWQH E40

FIG.410D

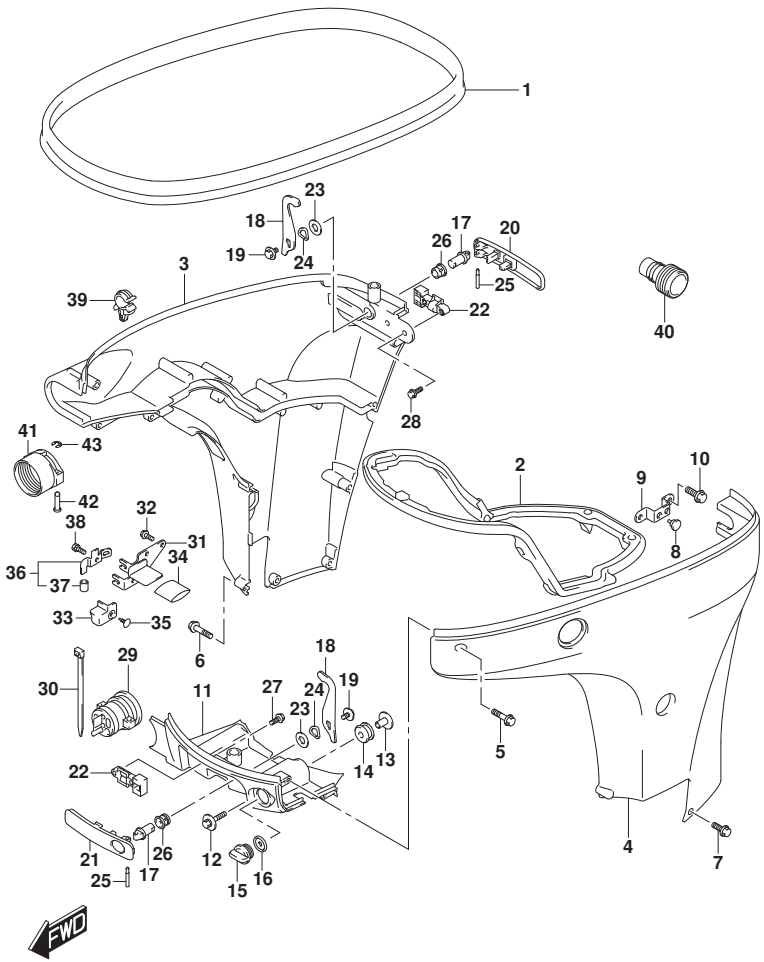

FIG.410D (1-K-8) SIDE COVER (DF80A)

REF NO.	PART NO.	DESCRIPTION	Q'TY	REMARKS
1	61112-99E01	RUBBER, SIDE COVER	1	
2	61134-87L01	SEAL, SIDE COVER	1	
3	61811-87L20-YAY	COVER, SIDE STBD (BLACK)	1	
4	61821-87L21-YAY	COVER, SIDE PORT (BLACK)	1	
5	09136-06148	SCREW (6X35)	8	
6	09136-06149	SCREW (6X55)	2	
7	09136-06161	SCREW (6X17)	3	
8	09321-08022	CUSHION	2	
9	61827-87L00	HOLDER, SIDE COVER	1	
10	01550-0820C	BOLT	2	
11	61831-87L20-YAY	PANEL, FRONT (BLACK)	1	
12	09116-08174	BOLT (8X38)	2	
13	09169-08050	WASHER	2	
14	09320-11023	CUSHION	2	
15	17913-93J00	PLUG, WATER	1	
16	17914-93J01	GASKET, WATER PLUG	1	
17	61632-93J00	SHAFT, ENGINE COVER HOOK	2	
18	61641-87L00	HOOK, ENGINE COVER	2	
19	09116-06127	BOLT (6X12)	2	
20	61633-87L00	LEVER, HOOK REAR	1	
21	61645-87L00	LEVER, HOOK FRONT	1	
22	61673-93J11	LATCH, HOOK LEVER	2	
23	09160-13014	WASHER (13.2X25X1)	2	
24	09164-14008	WASHER	2	
25	09202-04022	PIN	2	
26	09306-13007	BUSH	2	
27	09103-05026	BOLT (5X10)	2	
28	09103-05027	BOLT (5X16)	2	
29	61124-87L20	GROMMET, REMOCON CABLE	1	

FIG.410D

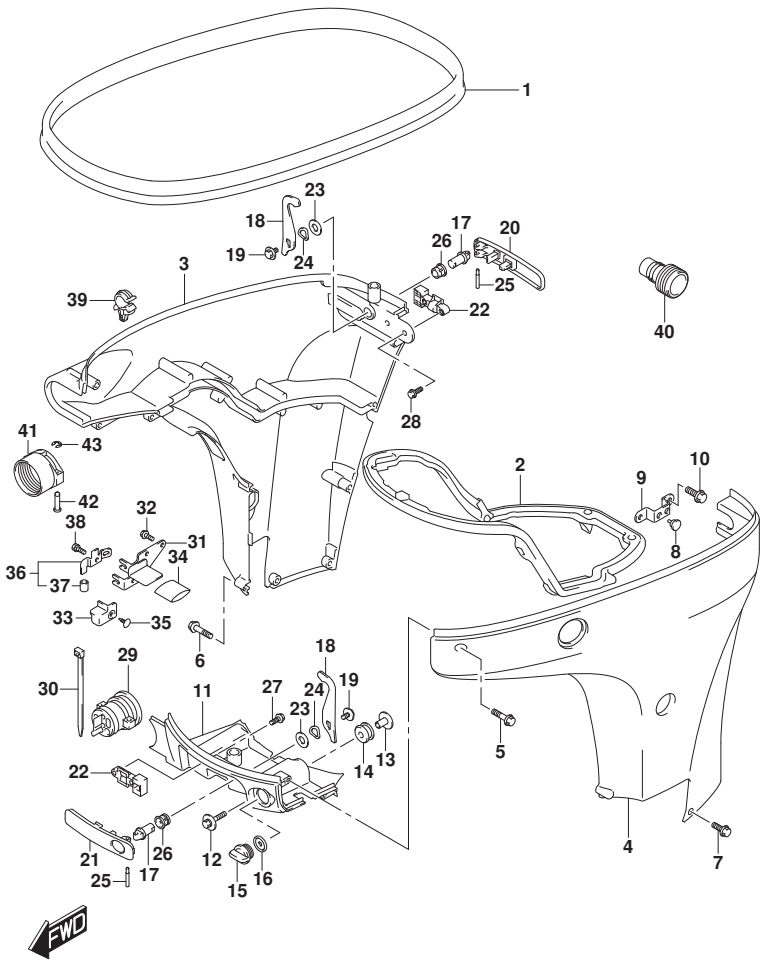

FIG.410D (1-K-9) SIDE COVER (DF80A)

REF NO.	PART NO.	DESCRIPTION	Q'TY	REMARKS
30	09407-25402	CLAMP (L:250)	1	
31	67341-87L00	HOLDER, REMOCON CABLE	1	
32	01550-0616C	BOLT	2	
33	67345-87L00	PROTECTOR	1	
34	67346-87L01	PROTECTOR, HOLDER	1	
35	09409-10304-5ES	CLIP (BLACK)	1	
36	67350-87L02	STOPPER, REMOCON CABLE	1	
37	09352-70104-600	.HOSE (7X10.2X600)	2	L:600->14
38	01570-06127	BOLT	1	
39	09403-11320	CLAMP	1	
40	17917-87L00	CONNECTOR, FLUSH WATER	1	
41	67361-90J10	ADAPTER, HOSE (RIGGING)	1	
42	09208-06009	PIN, HOSE ADAPTER (RIGGING)	2	
43	09383-04002	E RING	2	

DF80A E01
DF80A E40

FIG.420A

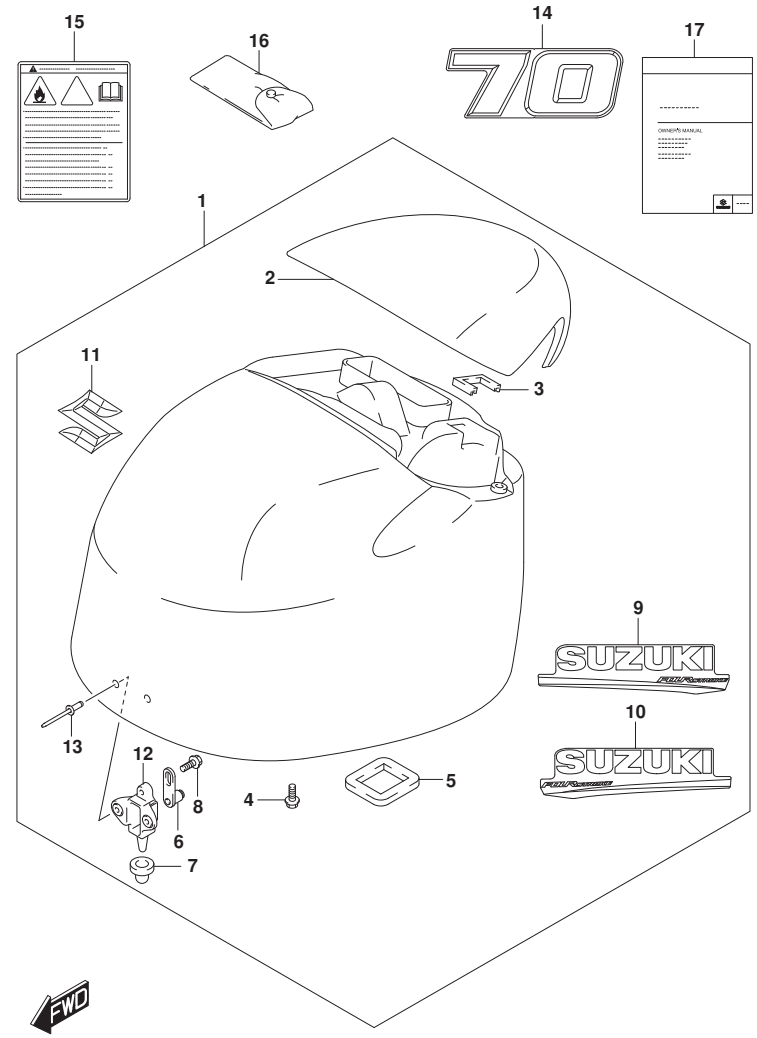

FIG.420A (1-K-10) ENGINE COVER (DF70A E01)

REF NO.	PART NO.	DESCRIPTION	Q'TY	REMARKS
1-1	61401-87Y01-YAY	COVER SET, ENGINE (BLACK)	1	
1-2	61401-87Y11-Y5S	COVER SET, ENGINE (WHITE)	1	
2-1	61431-87L21-YAY	.HANDLE, TILT UP (BLACK)	1	
2-2	61431-87L21-Y5S	.HANDLE, TILT UP (WHITE)	1	
3	61439-87L00	.SEAL, TILT UP HANDLE	1	
4	01550-0616C	.BOLT	4	
5	61476-87L00	.SEAL, AIR VENT	1	
6	61610-93J00	.FASTENER	2	
7	09329-10024	.CUSHION	2	
8	01550-0612C	.BOLT	2	
9-1	61443-88L20	.STRIPE, ENGINE COVER STBD	1	FOR YAY
9-2	61443-88L30	.STRIPE, ENGINE COVER STBD	1	FOR Y5S
10-1	61453-88L20	.STRIPE, ENGINE COVER PORT	1	FOR YAY
10-2	61453-88L30	.STRIPE, ENGINE COVER PORT	1	FOR Y5S
11	68111-87L00	.EMBLEM (S)	1	
12	61621-87L00	.BRACKET, FASTENER	2	
13	09229-04025	.RIVET	4	
14-1	61435-87LB0	MARK, EMBLEM FRONT & REAR (70)	2	FOR YAY
14-2	61435-87LE0	MARK, EMBLEM FRONT & REAR (70)	2	FOR Y5S
15	61458-90J01	LABEL, ENGINE COVER	1	
16	09800-81841	TOOL SET	1	
17-1	99011-87L80-054	MANUAL, OWNER'S	1	
17-2	99011-87L80-059	MANUAL, OWNER'S	1	

DF70A E01

FIG.420B

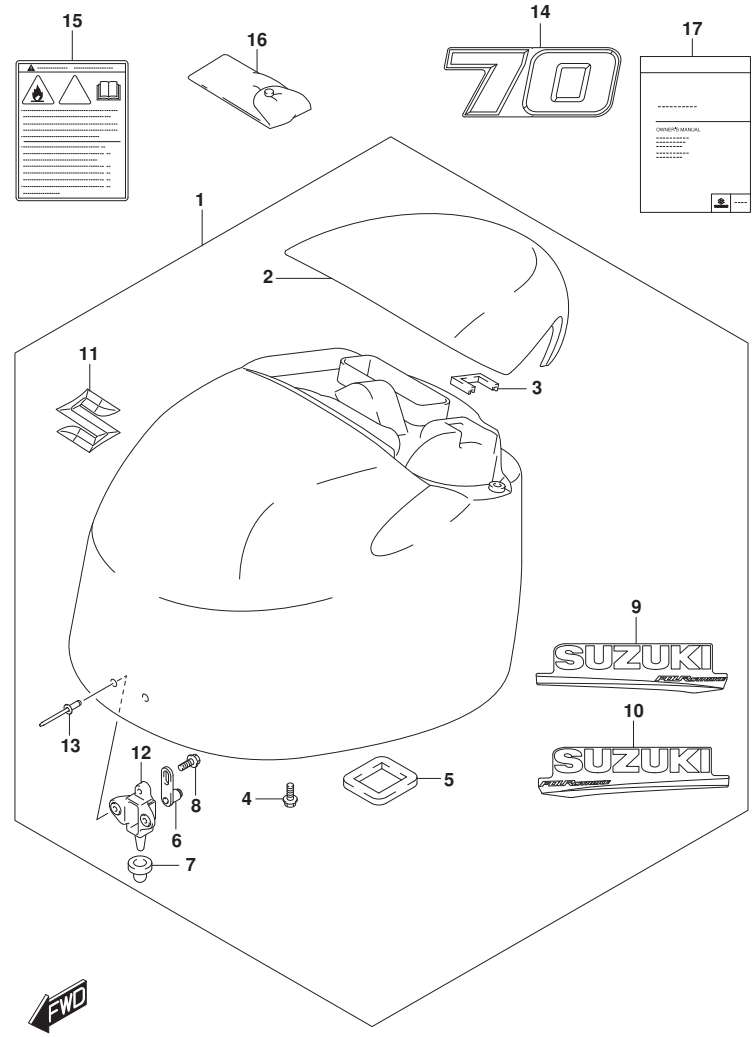

FIG.420B (1-K-11) ENGINE COVER (DF70A E40)

REF NO.	PART NO.	DESCRIPTION	Q'TY	REMARKS
1-1	61401-87Y01-YAY	COVER SET, ENGINE (BLACK)	1	
1-2	61401-87Y11-Y5S	COVER SET, ENGINE (WHITE)	1	
2-1	61431-87L21-YAY	.HANDLE, TILT UP (BLACK)	1	
2-2	61431-87L21-Y5S	.HANDLE, TILT UP (WHITE)	1	
3	61439-87L00	.SEAL, TILT UP HANDLE	1	
4	01550-0616C	.BOLT	4	
5	61476-87L00	.SEAL, AIR VENT	1	
6	61610-93J00	.FASTENER	2	
7	09329-10024	.CUSHION	2	
8	01550-0612C	.BOLT	2	
9-1	61443-88L20	.STRIPE, ENGINE COVER STBD	1	FOR YAY
9-2	61443-88L30	.STRIPE, ENGINE COVER STBD	1	FOR Y5S
10-1	61453-88L20	.STRIPE, ENGINE COVER PORT	1	FOR YAY
10-2	61453-88L30	.STRIPE, ENGINE COVER PORT	1	FOR Y5S
11	68111-87L00	.EMBLEM (S)	1	
12	61621-87L00	.BRACKET, FASTENER	2	
13	09229-04025	.RIVET	4	
14-1	61435-87LB0	MARK, EMBLEM FRONT & REAR (70)	2	FOR YAY
14-2	61435-87LE0	MARK, EMBLEM FRONT & REAR (70)	2	FOR Y5S
15	61458-90J01	LABEL, ENGINE COVER	1	
16	09800-81841	TOOL SET	1	
17	99011-87L80-059	MANUAL, OWNER'S	1	

DF70A E40

FIG.420C

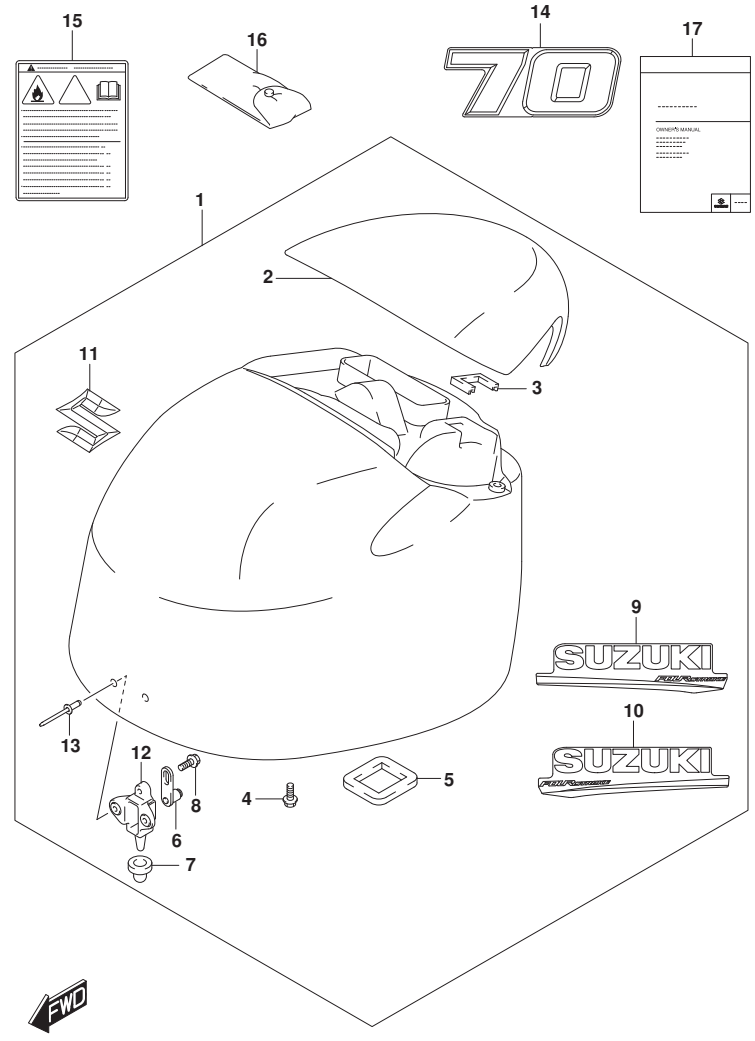

FIG.420C (1-K-12) ENGINE COVER (DF70ATH E01)

REF NO.	PART NO.	DESCRIPTION	Q'TY	REMARKS
1	61401-87Y01-YAY	COVER SET, ENGINE (BLACK)	1	
2	61431-87L21-YAY	.HANDLE, TILT UP (BLACK)	1	
3	61439-87L00	.SEAL, TILT UP HANDLE	1	
4	01550-0616C	.BOLT	4	
5	61476-87L00	.SEAL, AIR VENT	1	
6	61610-93J00	.FASTENER	2	
7	09329-10024	.CUSHION	2	
8	01550-0612C	.BOLT	2	
9	61443-88L20	.STRIPE, ENGINE COVER STBD	1	
10	61453-88L20	.STRIPE, ENGINE COVER PORT	1	
11	68111-87L00	.EMBLEM (S)	1	
12	61621-87L00	.BRACKET, FASTENER	2	
13	09229-04025	.RIVET	4	
14	61435-87LB0	MARK, EMBLEM FRONT & REAR (70)	2	
15	61458-90J01	LABEL, ENGINE COVER	1	
16	09800-81841	TOOL SET	1	
17	99011-87L80-059	MANUAL, OWNER'S	1	

DF70ATH E01

FIG.420D

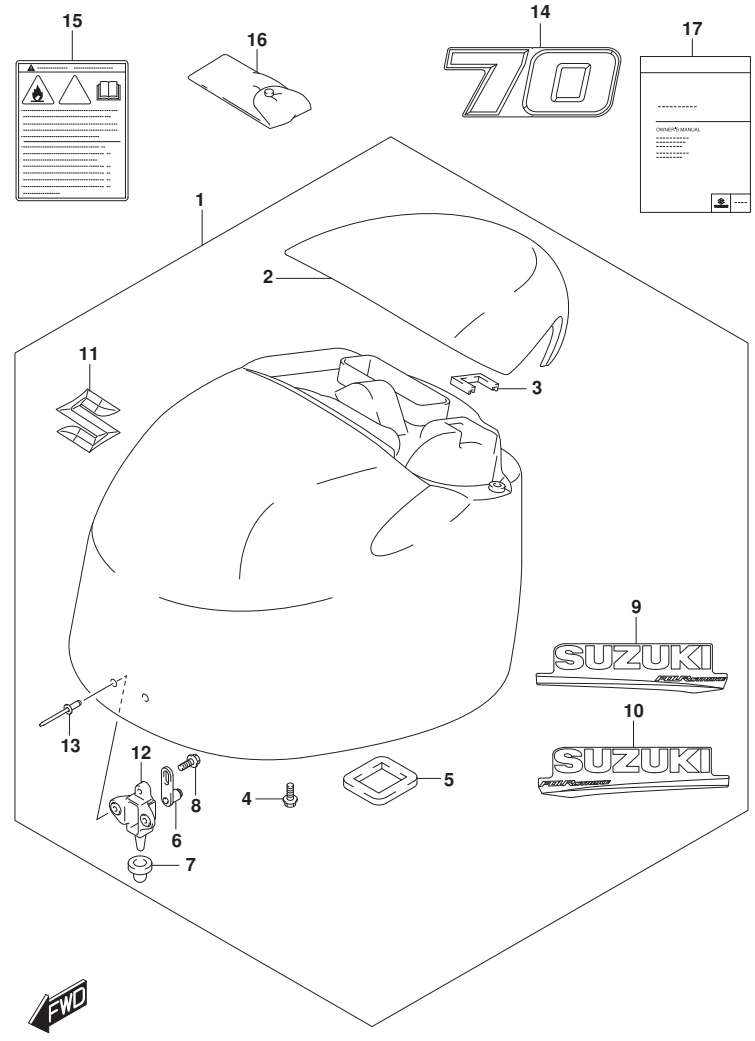

FIG.420D (1-K-13) ENGINE COVER (DF70ATH E40)

REF NO.	PART NO.	DESCRIPTION	Q'TY	REMARKS
1	61401-87Y01-YAY	COVER SET, ENGINE (BLACK)	1	
2	61431-87L21-YAY	.HANDLE, TILT UP (BLACK)	1	
3	61439-87L00	.SEAL, TILT UP HANDLE	1	
4	01550-0616C	.BOLT	4	
5	61476-87L00	.SEAL, AIR VENT	1	
6	61610-93J00	.FASTENER	2	
7	09329-10024	.CUSHION	2	
8	01550-0612C	.BOLT	2	
9	61443-88L20	.STRIPE, ENGINE COVER STBD	1	
10	61453-88L20	.STRIPE, ENGINE COVER PORT	1	
11	68111-87L00	.EMBLEM (S)	1	
12	61621-87L00	.BRACKET, FASTENER	2	
13	09229-04025	.RIVET	4	
14	61435-87LB0	MARK, EMBLEM FRONT & REAR (70)	2	
15	61458-90J01	LABEL, ENGINE COVER	1	
16	09800-81841	TOOL SET	1	
17	99011-87L80-059	MANUAL, OWNER'S	1	

DF70ATH E40

FIG.420E

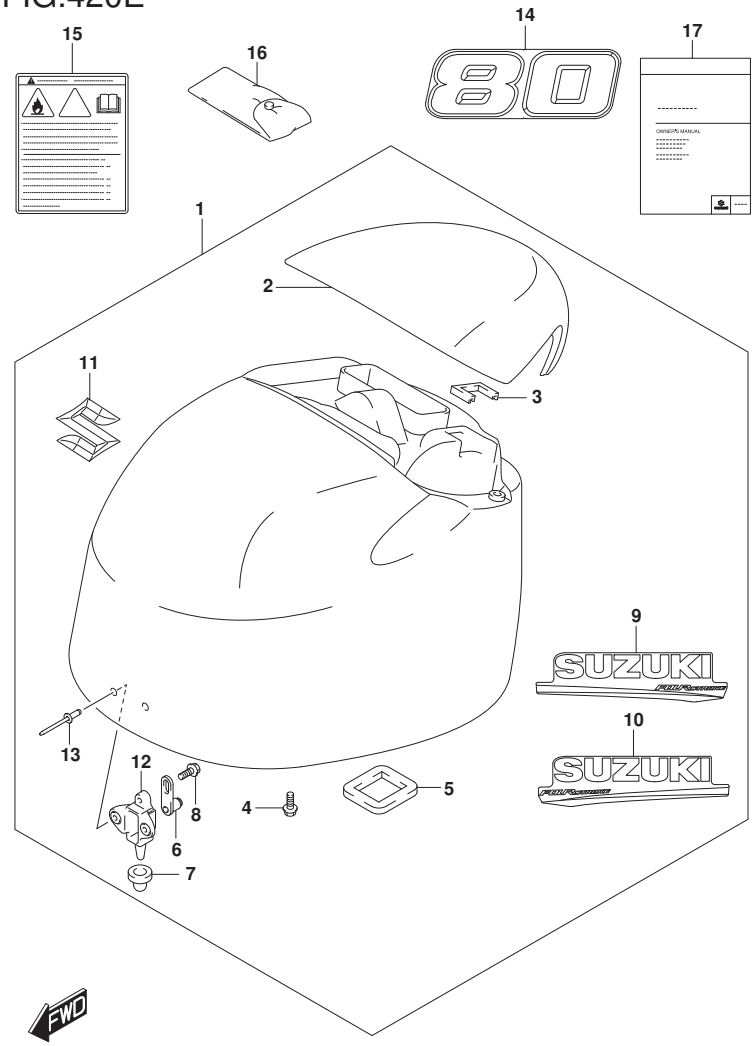

FIG.420E (1-K-14) ENGINE COVER (DF80A E01)

REF NO.	PART NO.	DESCRIPTION	Q'TY	REMARKS
1	61401-87Y01-YAY	COVER SET, ENGINE (BLACK)	1	
2	61431-87L21-YAY	.HANDLE, TILT UP (BLACK)	1	
3	61439-87L00	.SEAL, TILT UP HANDLE	1	
4	01550-0616C	.BOLT	4	
5	61476-87L00	.SEAL, AIR VENT	1	
6	61610-93J00	.FASTENER	2	
7	09329-10024	.CUSHION	2	
8	01550-0612C	.BOLT	2	
9	61443-88L20	.STRIPE, ENGINE COVER STBD	1	
10	61453-88L20	.STRIPE, ENGINE COVER PORT	1	
11	68111-87L00	.EMBLEM (S)	1	
12	61621-87L00	.BRACKET, FASTENER	2	
13	09229-04025	.RIVET	4	
14	61435-87LC0	MARK, EMBLEM FRONT & REAR (80)	2	
15	61458-90J01	LABEL, ENGINE COVER	1	
16	09800-81841	TOOL SET	1	
17-1	99011-87L80-054	MANUAL, OWNER'S	1	
17-2	99011-87L80-059	MANUAL, OWNER'S	1	

DF80A E01

FIG.420F

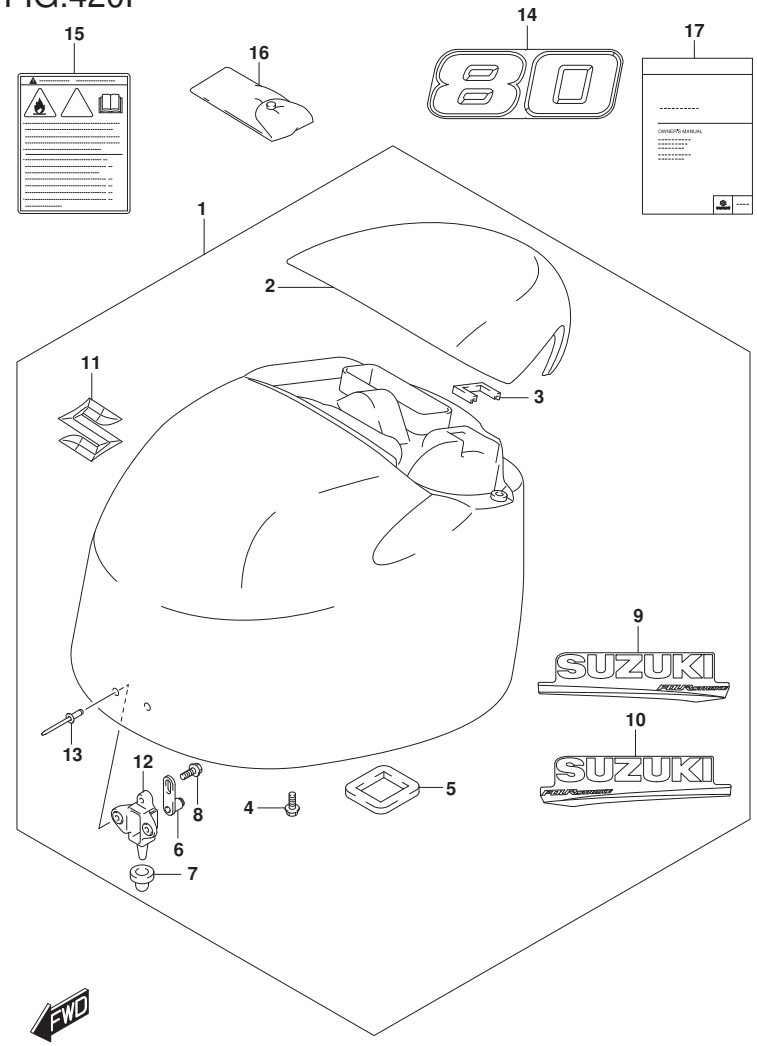

FIG.420F (1-K-15) ENGINE COVER (DF80A E40)

REF NO.	PART NO.	DESCRIPTION	Q'TY	REMARKS
1	61401-87Y01-YAY	COVER SET, ENGINE (BLACK)	1	
2	61431-87L21-YAY	.HANDLE, TILT UP (BLACK)	1	
3	61439-87L00	.SEAL, TILT UP HANDLE	1	
4	01550-0616C	.BOLT	4	
5	61476-87L00	.SEAL, AIR VENT	1	
6	61610-93J00	.FASTENER	2	
7	09329-10024	.CUSHION	2	
8	01550-0612C	.BOLT	2	
9	61443-88L20	.STRIPE, ENGINE COVER STBD	1	
10	61453-88L20	.STRIPE, ENGINE COVER PORT	1	
11	68111-87L00	.EMBLEM (S)	1	
12	61621-87L00	.BRACKET, FASTENER	2	
13	09229-04025	.RIVET	4	
14	61435-87LC0	MARK, EMBLEM FRONT & REAR (80)	2	
15	61458-90J01	LABEL, ENGINE COVER	1	
16	09800-81841	TOOL SET	1	
17	99011-87L80-059	MANUAL, OWNER'S	1	

DF80A E40

FIG.420G

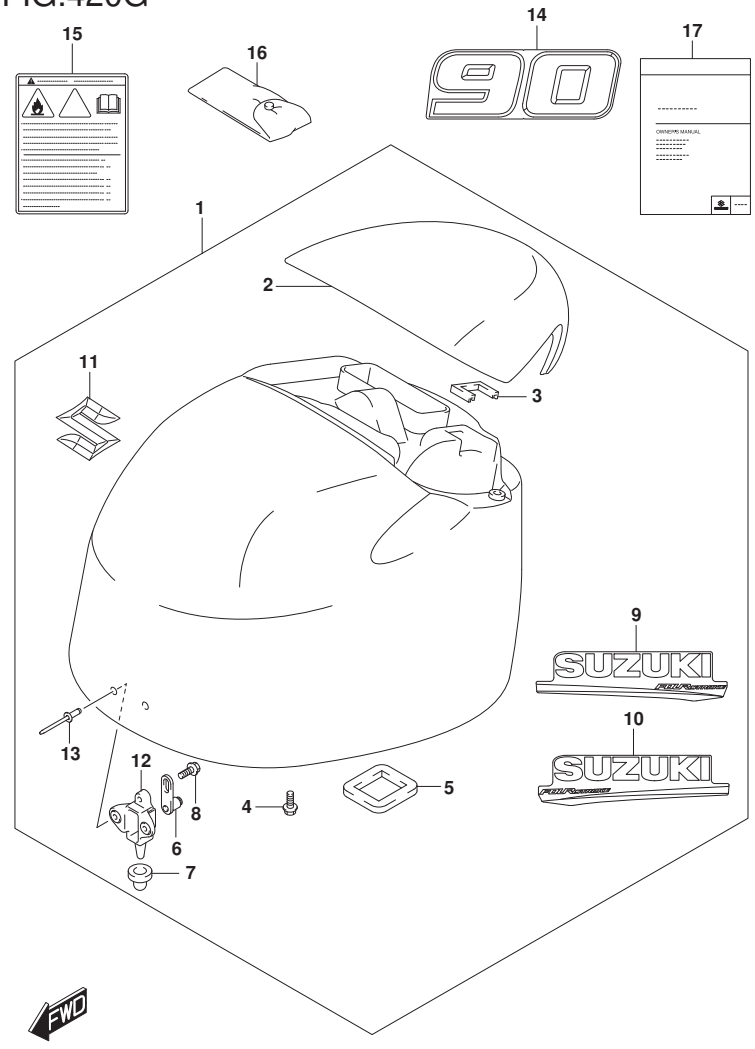

FIG.420G (1-L-2) ENGINE COVER (DF90A E01)

REF NO.	PART NO.	DESCRIPTION	Q'TY	REMARKS
1-1	61401-87Y01-YAY	COVER SET, ENGINE (BLACK)	1	
1-2	61401-87Y11-Y5S	COVER SET, ENGINE (WHITE)	1	
2-1	61431-87L21-YAY	.HANDLE, TILT UP (BLACK)	1	
2-2	61431-87L21-Y5S	.HANDLE, TILT UP (WHITE)	1	
3	61439-87L00	.SEAL, TILT UP HANDLE	1	
4	01550-0616C	.BOLT	4	
5	61476-87L00	.SEAL, AIR VENT	1	
6	61610-93J00	.FASTENER	2	
7	09329-10024	.CUSHION	2	
8	01550-0612C	.BOLT	2	
9-1	61443-88L20	.STRIPE, ENGINE COVER STBD	1	FOR YAY
9-2	61443-88L30	.STRIPE, ENGINE COVER STBD	1	FOR Y5S
10-1	61453-88L20	.STRIPE, ENGINE COVER PORT	1	FOR YAY
10-2	61453-88L30	.STRIPE, ENGINE COVER PORT	1	FOR Y5S
11	68111-87L00	.EMBLEM (S)	1	
12	61621-87L00	.BRACKET, FASTENER	2	
13	09229-04025	.RIVET	4	
14-1	61435-87LD0	MARK, EMBLEM FRONT & REAR (90)	2	FOR YAY
14-2	61435-87LF0	MARK, EMBLEM FRONT & REAR (90)	2	FOR Y5S
15	61458-90J01	LABEL, ENGINE COVER	1	
16	09800-81841	TOOL SET	1	
17-1	99011-87L80-054	MANUAL, OWNER'S	1	
17-2	99011-87L80-059	MANUAL, OWNER'S	1	

DF90A E01

FIG.420H

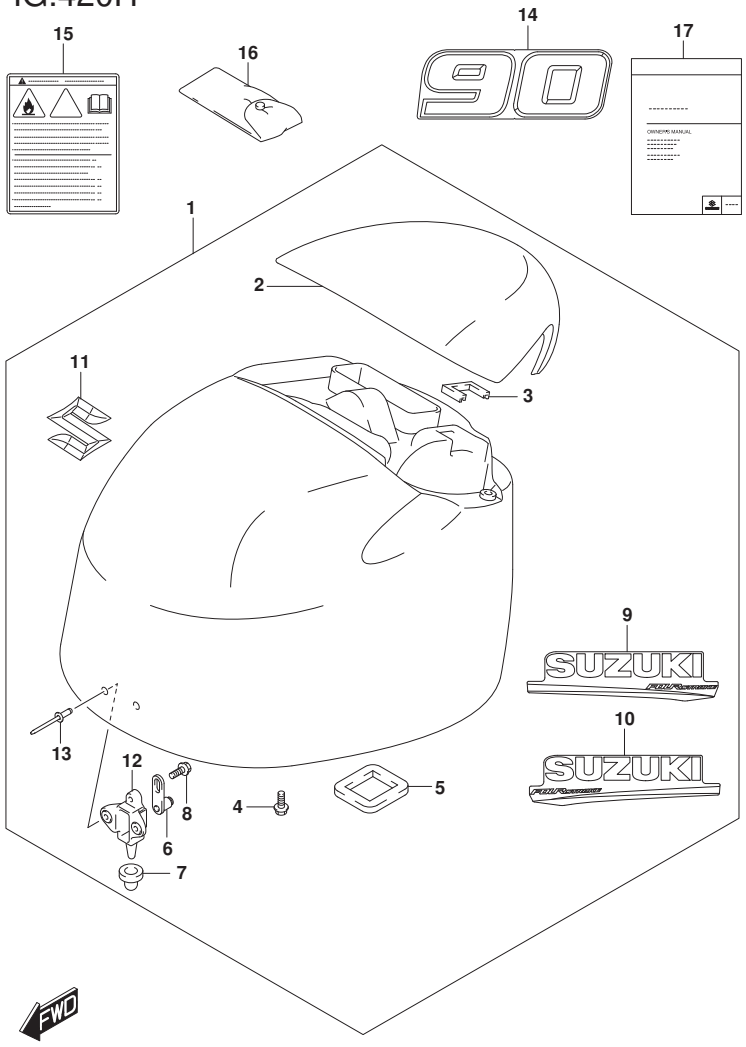

FIG.420H (1-L-3) ENGINE COVER (DF90A E40)

REF NO.	PART NO.	DESCRIPTION	Q'TY	REMARKS
1-1	61401-87Y01-YAY	COVER SET, ENGINE (BLACK)	1	
1-2	61401-87Y11-Y5S	COVER SET, ENGINE (WHITE)	1	
2-1	61431-87L21-YAY	.HANDLE, TILT UP (BLACK)	1	
2-2	61431-87L21-Y5S	.HANDLE, TILT UP (WHITE)	1	
3	61439-87L00	.SEAL, TILT UP HANDLE	1	
4	01550-0616C	.BOLT	4	
5	61476-87L00	.SEAL, AIR VENT	1	
6	61610-93J00	.FASTENER	2	
7	09329-10024	.CUSHION	2	
8	01550-0612C	.BOLT	2	
9-1	61443-88L20	.STRIPE, ENGINE COVER STBD	1	FOR YAY
9-2	61443-88L30	.STRIPE, ENGINE COVER STBD	1	FOR Y5S
10-1	61453-88L20	.STRIPE, ENGINE COVER PORT	1	FOR YAY
10-2	61453-88L30	.STRIPE, ENGINE COVER PORT	1	FOR Y5S
11	68111-87L00	.EMBLEM (S)	1	
12	61621-87L00	.BRACKET, FASTENER	2	
13	09229-04025	.RIVET	4	
14-1	61435-87LD0	MARK, EMBLEM FRONT & REAR (90)	2	FOR YAY
14-2	61435-87LF0	MARK, EMBLEM FRONT & REAR (90)	2	FOR Y5S
15	61458-90J01	LABEL, ENGINE COVER	1	
16	09800-81841	TOOL SET	1	
17	99011-87L80-059	MANUAL, OWNER'S	1	

DF90A E40

FIG.420J

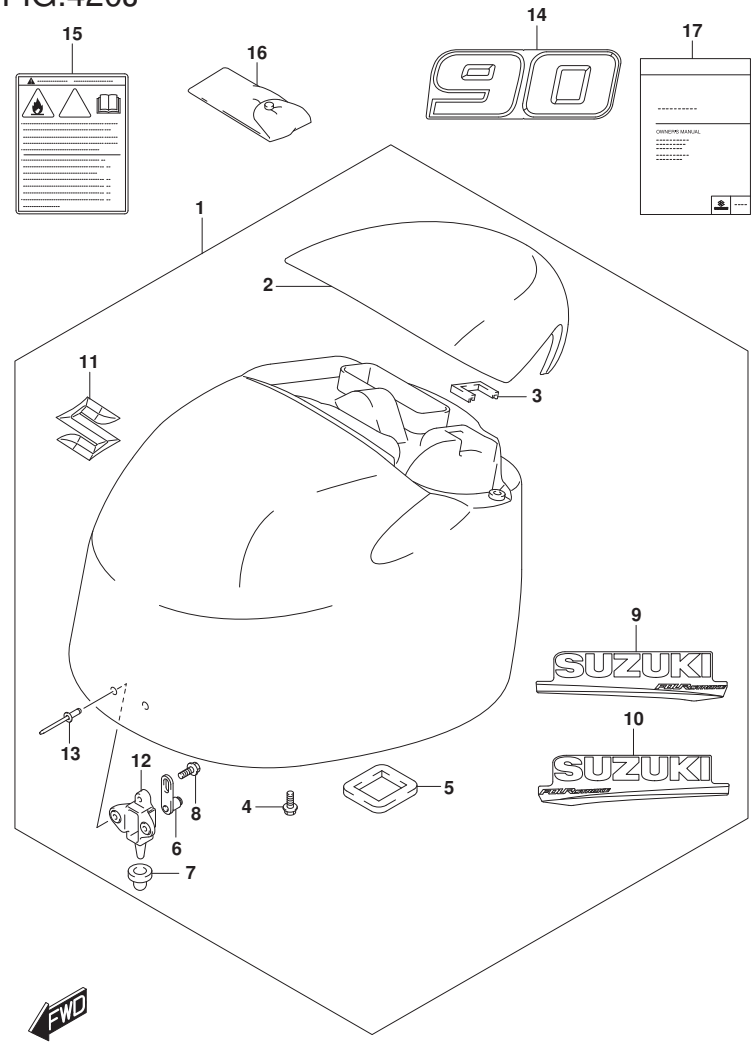

FIG.420J (1-L-4) ENGINE COVER (DF90ATH E01)

REF NO.	PART NO.	DESCRIPTION	Q'TY	REMARKS
1	61401-87Y01-YAY	COVER SET, ENGINE (BLACK)	1	
2	61431-87L21-YAY	.HANDLE, TILT UP (BLACK)	1	
3	61439-87L00	.SEAL, TILT UP HANDLE	1	
4	01550-0616C	.BOLT	4	
5	61476-87L00	.SEAL, AIR VENT	1	
6	61610-93J00	.FASTENER	2	
7	09329-10024	.CUSHION	2	
8	01550-0612C	.BOLT	2	
9	61443-88L20	.STRIPE, ENGINE COVER STBD	1	
10	61453-88L20	.STRIPE, ENGINE COVER PORT	1	
11	68111-87L00	.EMBLEM (S)	1	
12	61621-87L00	.BRACKET, FASTENER	2	
13	09229-04025	.RIVET	4	
14	61435-87LD0	MARK, EMBLEM FRONT & REAR (90)	2	
15	61458-90J01	LABEL, ENGINE COVER	1	
16	09800-81841	TOOL SET	1	
17	99011-87L80-059	MANUAL, OWNER'S	1	

DF90ATH E01

FIG.420K

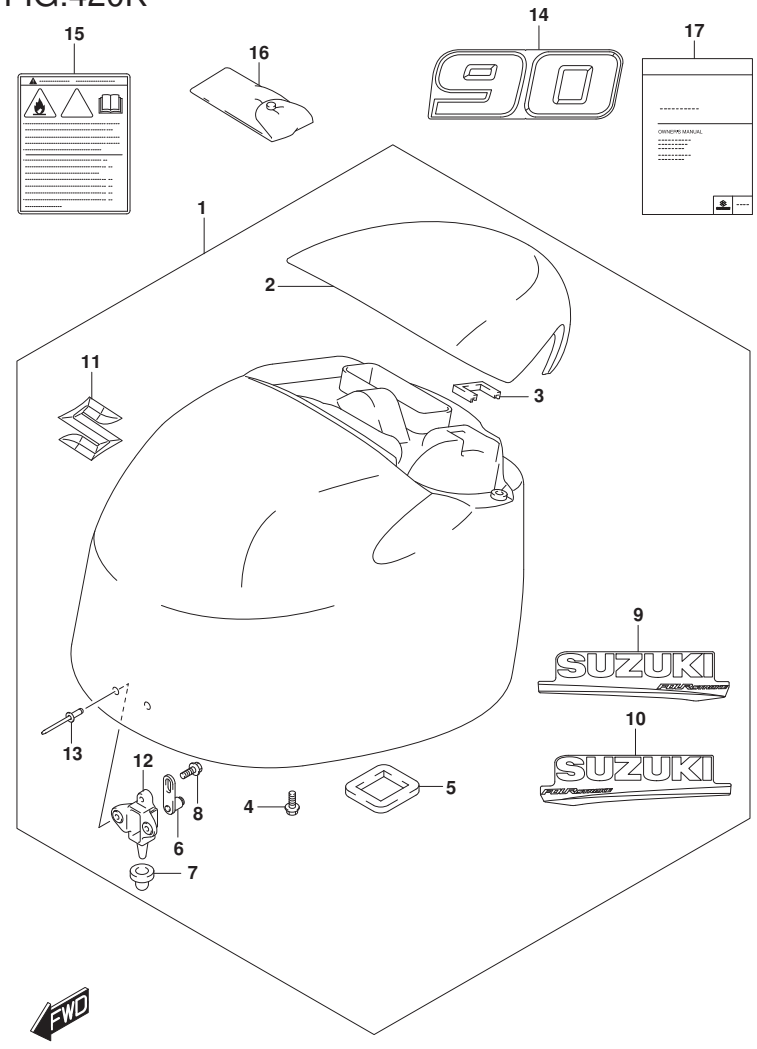

FIG.420K (1-L-5) ENGINE COVER (DF90ATH E40)

REF NO.	PART NO.	DESCRIPTION	Q'TY	REMARKS
1	61401-87Y01-YAY	COVER SET, ENGINE (BLACK)	1	
2	61431-87L21-YAY	.HANDLE, TILT UP (BLACK)	1	
3	61439-87L00	.SEAL, TILT UP HANDLE	1	
4	01550-0616C	.BOLT	4	
5	61476-87L00	.SEAL, AIR VENT	1	
6	61610-93J00	.FASTENER	2	
7	09329-10024	.CUSHION	2	
8	01550-0612C	.BOLT	2	
9	61443-88L20	.STRIPE, ENGINE COVER STBD	1	
10	61453-88L20	.STRIPE, ENGINE COVER PORT	1	
11	68111-87L00	.EMBLEM (S)	1	
12	61621-87L00	.BRACKET, FASTENER	2	
13	09229-04025	.RIVET	4	
14	61435-87LD0	MARK, EMBLEM FRONT & REAR (90)	2	
15	61458-90J01	LABEL, ENGINE COVER	1	
16	09800-81841	TOOL SET	1	
17	99011-87L80-059	MANUAL, OWNER'S	1	

DF90ATH E40

DF90A_E01_020_420K
ENGINE COVER

FIG.420L

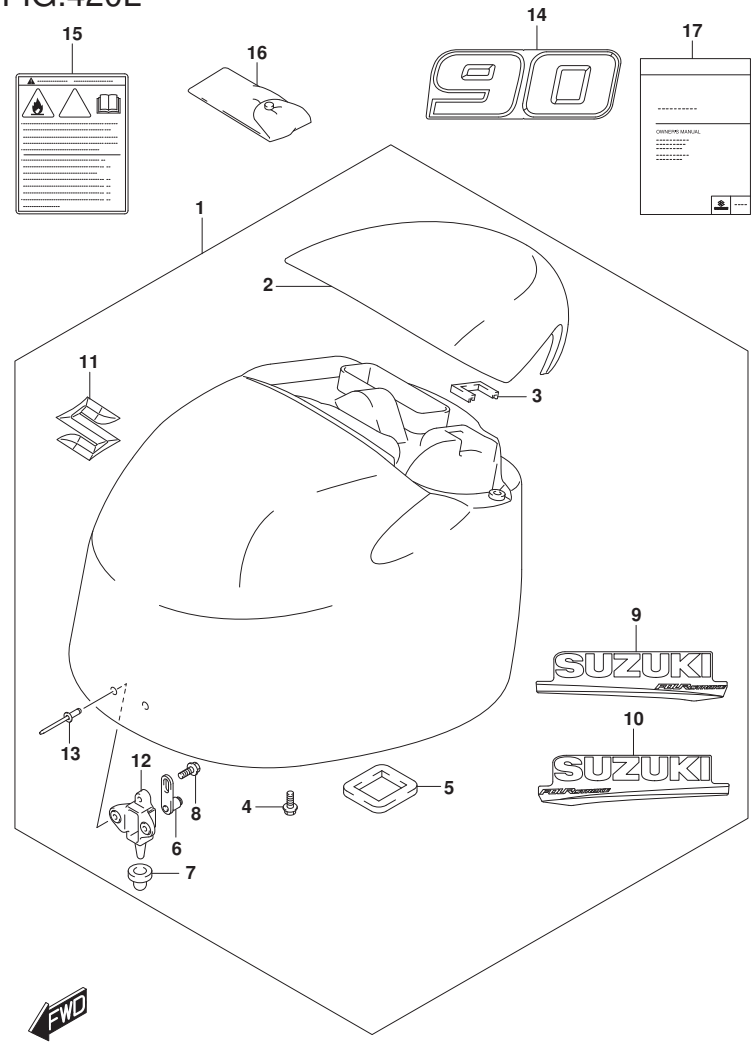

FIG.420L (1-L-6) ENGINE COVER (DF90AWQH E40)

REF NO.	PART NO.	DESCRIPTION	Q'TY	REMARKS
1	61401-87Y40-YAY	COVER SET, ENGINE (BLACK)	1	
2	61431-87L21-YAY	.HANDLE, TILT UP (BLACK)	1	
3	61439-87L00	.SEAL, TILT UP HANDLE	1	
4	01550-0616C	.BOLT	4	
5	61476-87L00	.SEAL, AIR VENT	1	
6	61610-93J00	.FASTENER	2	
7	09329-10024	.CUSHION	2	
8	01550-0612C	.BOLT	2	
9	61443-88L20	.STRIPE, ENGINE COVER STBD	1	
10	61453-88L20	.STRIPE, ENGINE COVER PORT	1	
11	68111-87L00	.EMBLEM (S)	1	
12	61621-87L00	.BRACKET, FASTENER	2	
13	09229-04056	.RIVET	4	
14	61435-87LD0	MARK, EMBLEM FRONT & REAR (90)	2	
15	61458-90J01	LABEL, ENGINE COVER	1	
16	09800-81841	TOOL SET	1	
17	99011-87L90-059	MANUAL, OWNER'S	1	

DF90AWQH E40

DF90A_E01_020_420L
ENGINE COVER

FIG.420M

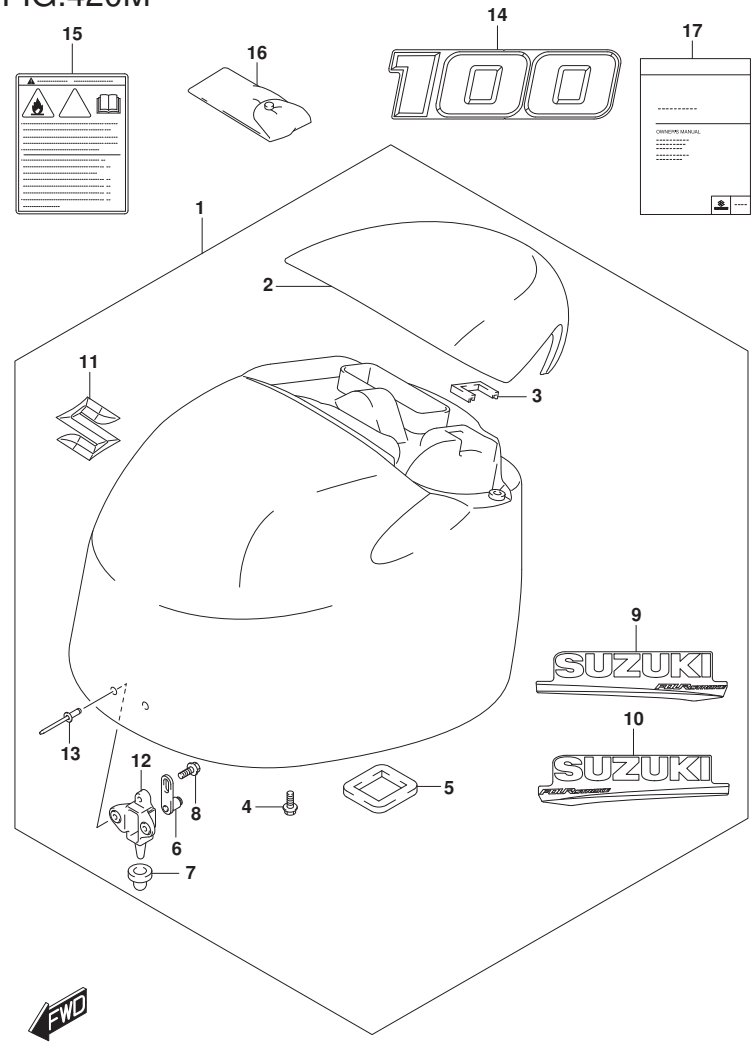

FIG.420M (1-L-7) ENGINE COVER (DF100B E01)

REF NO.	PART NO.	DESCRIPTION	Q'TY	REMARKS
1-1	61401-87Y01-YAY	COVER SET, ENGINE (BLACK)	1	
1-2	61401-87Y11-Y5S	COVER SET, ENGINE (WHITE)	1	
2-1	61431-87L21-YAY	.HANDLE, TILT UP (BLACK)	1	
2-2	61431-87L21-Y5S	.HANDLE, TILT UP (WHITE)	1	
3	61439-87L00	.SEAL, TILT UP HANDLE	1	
4	01550-0616C	.BOLT	4	
5	61476-87L00	.SEAL, AIR VENT	1	
6	61610-93J00	.FASTENER	2	
7	09329-10024	.CUSHION	2	
8	01550-0612C	.BOLT	2	
9-1	61443-88L20	.STRIPE, ENGINE COVER STBD	1	FOR YAY
9-2	61443-88L30	.STRIPE, ENGINE COVER STBD	1	FOR Y5S
10-1	61453-88L20	.STRIPE, ENGINE COVER PORT	1	FOR YAY
10-2	61453-88L30	.STRIPE, ENGINE COVER PORT	1	FOR Y5S
11	68111-87L00	.EMBLEM (S)	1	
12	61621-87L00	.BRACKET, FASTENER	2	
13	09229-04025	.RIVET	4	
14-1	61422-90J40	MARK, EMBLEM FR & RR (100)	2	FOR YAY
14-2	61422-87L90	MARK, EMBLEM FR & RR (100)	2	FOR Y5S
15	61458-90J01	LABEL, ENGINE COVER	1	
16	09800-81841	TOOL SET	1	
17-1	99011-87L80-054	MANUAL, OWNER'S	1	
17-2	99011-87L80-059	MANUAL, OWNER'S	1	

DF100B E01

DF90A_E01_020_420M
ENGINE COVER

FIG.420N

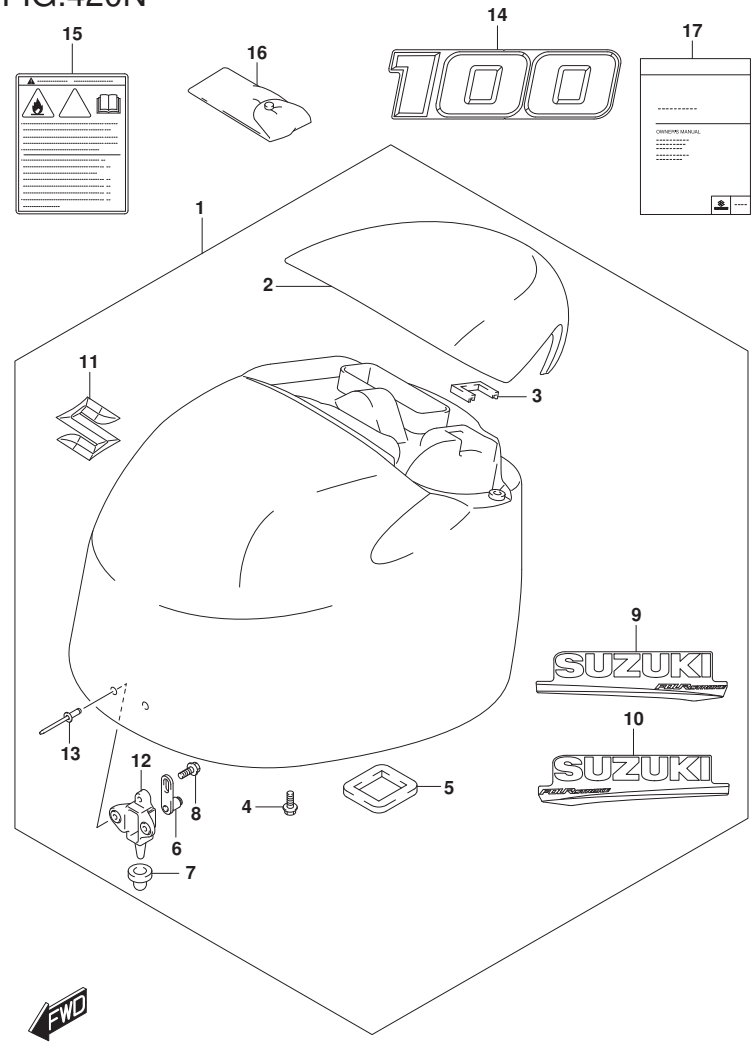

FIG.420N (1-L-8) ENGINE COVER (DF100B E40)

REF NO.	PART NO.	DESCRIPTION	Q'TY	REMARKS
1-1	61401-87Y01-YAY	COVER SET, ENGINE (BLACK)	1	
1-2	61401-87Y11-Y5S	COVER SET, ENGINE (WHITE)	1	
2-1	61431-87L21-YAY	.HANDLE, TILT UP (BLACK)	1	
2-2	61431-87L21-Y5S	.HANDLE, TILT UP (WHITE)	1	
3	61439-87L00	.SEAL, TILT UP HANDLE	1	
4	01550-0616C	.BOLT	4	
5	61476-87L00	.SEAL, AIR VENT	1	
6	61610-93J00	.FASTENER	2	
7	09329-10024	.CUSHION	2	
8	01550-0612C	.BOLT	2	
9-1	61443-88L20	.STRIPE, ENGINE COVER STBD	1	FOR YAY
9-2	61443-88L30	.STRIPE, ENGINE COVER STBD	1	FOR Y5S
10-1	61453-88L20	.STRIPE, ENGINE COVER PORT	1	FOR YAY
10-2	61453-88L30	.STRIPE, ENGINE COVER PORT	1	FOR Y5S
11	68111-87L00	.EMBLEM (S)	1	
12	61621-87L00	.BRACKET, FASTENER	2	
13	09229-04025	.RIVET	4	
14-1	61422-90J40	MARK, EMBLEM FR & RR (100)	2	FOR YAY
14-2	61422-87L90	MARK, EMBLEM FR & RR (100)	2	FOR Y5S
15	61458-90J01	LABEL, ENGINE COVER	1	
16	09800-81841	TOOL SET	1	
17	99011-87L80-059	MANUAL, OWNER'S	1	

DF100B E40

FIG.432A

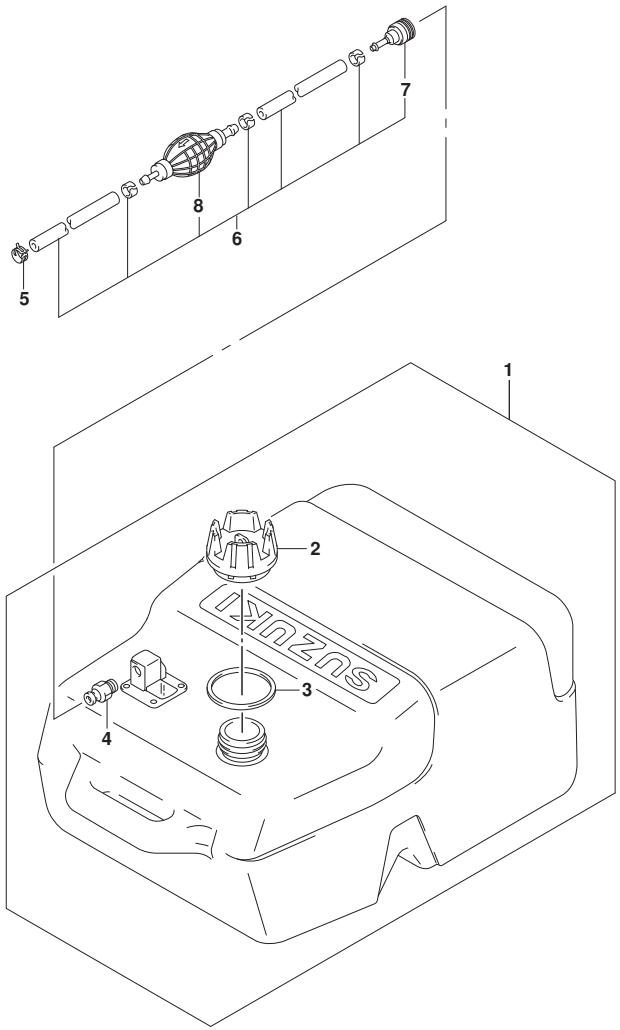

FIG.432A (1-L-9) FUEL TANK

REF NO.	PART NO.	DESCRIPTION	Q'TY	REMARKS
1	65000-94L10	TANK ASSY, FUEL (25L)	1	
2	65520-99100	.CAP ASSY, FUEL TANK	1	
3	65561-95D00	.GASKET, TANK CAP	1	
4	65740-95D01	.PLUG, FUEL CONNECTOR	1	
5	09401-11423	CLIP	1	
6	65700-90J23	HOSE, FUEL (TANK TO ENGINE)	1	
7	65750-95501	.SOCKET, FUEL HOSE	1	
8	65770-90J12	.PUMP, SQUEEZE	1	

DF90A_E01_020_432A
FUEL TANK

FIG.442A

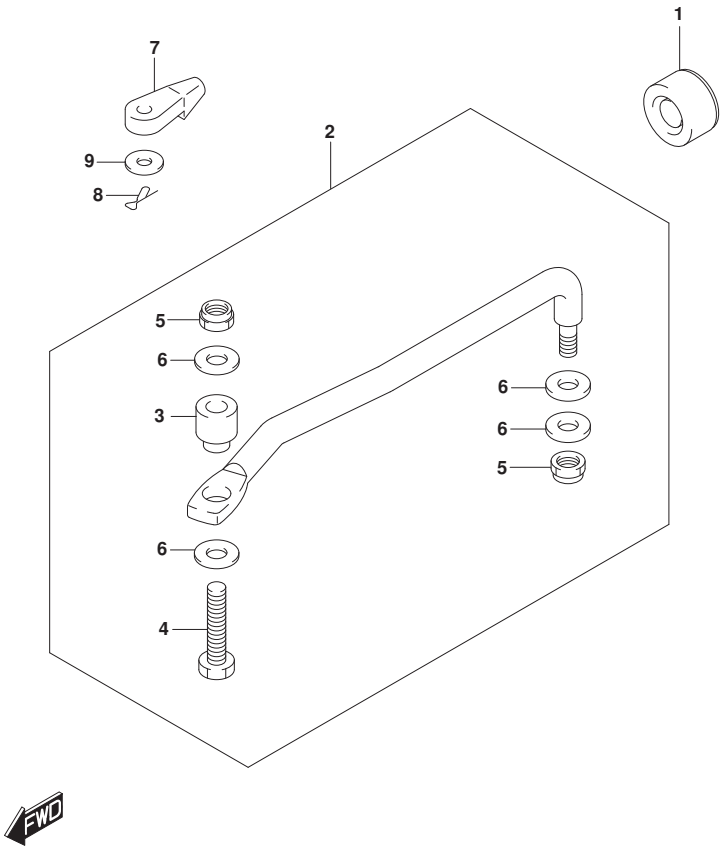

FIG.442A (1-L-10) DRAG LINK (DF70A)(DF80A)(DF90A)(DF100B)

REF NO.	PART NO.	DESCRIPTION	Q'TY	REMARKS
1	41161-94400	SEAL, STEERING CABLE	1	
2	67701-87L01	LINK, DRAG	1	
3	67721-87L00	.SPACER	1	
4	67725-99E20	.BOLT, DRAG LINK	1	
5	67726-99E00	.NUT	2	
6	67728-99E00	.WASHER	4	
7	67467-89J01	CONNECTOR, REMOCON CABLE	2	
8	09385-06012	CLIP	2	
9	09160-06055	WASHER (7X12X1)	2	

DF70A E01
DF70A E40
DF80A E01
DF80A E40
DF90A E01
DF90A E40
DF100B E01
DF100B E40

DF90A_E01_020_442A
DRAG LINK

FIG.442B

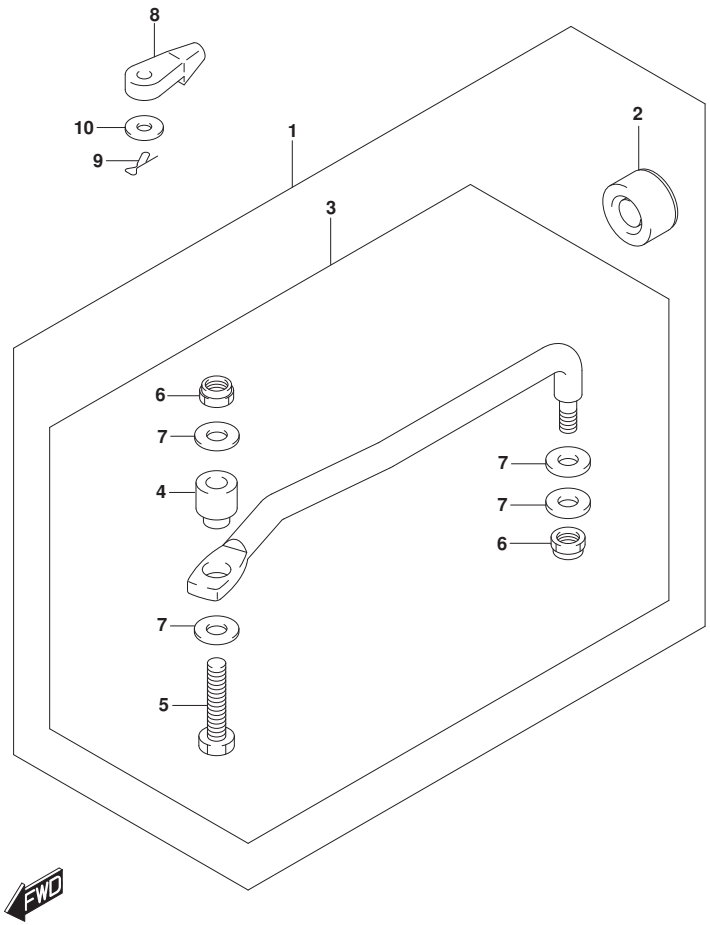

FIG.442B (1-L-11) DRAG LINK (DF70ATH)(DF90ATH)

REF NO.	PART NO.	DESCRIPTION	Q'TY	REMARKS
1	67700-87L01	LINK SET, DRAG	1	OPT
2	41161-94400	.SEAL, STEERING CABLE	1	OPT
3	67701-87L01	.LINK, DRAG	1	OPT
4	67721-87L00	..SPACER	1	OPT
5	67725-99E20	..BOLT, DRAG LINK	1	OPT
6	67726-99E00	..NUT	2	OPT
7	67728-99E00	..WASHER	4	OPT
8	67467-89J01	CONNECTOR, REMOCON CABLE	2	
9	09385-06012	CLIP	2	
10	09160-06055	WASHER (7X12X1)	2	

DF70ATH E01
DF70ATH E40
DF90ATH E01
DF90ATH E40

DF90A_E01_020_442B
DRAG LINK

FIG.444A

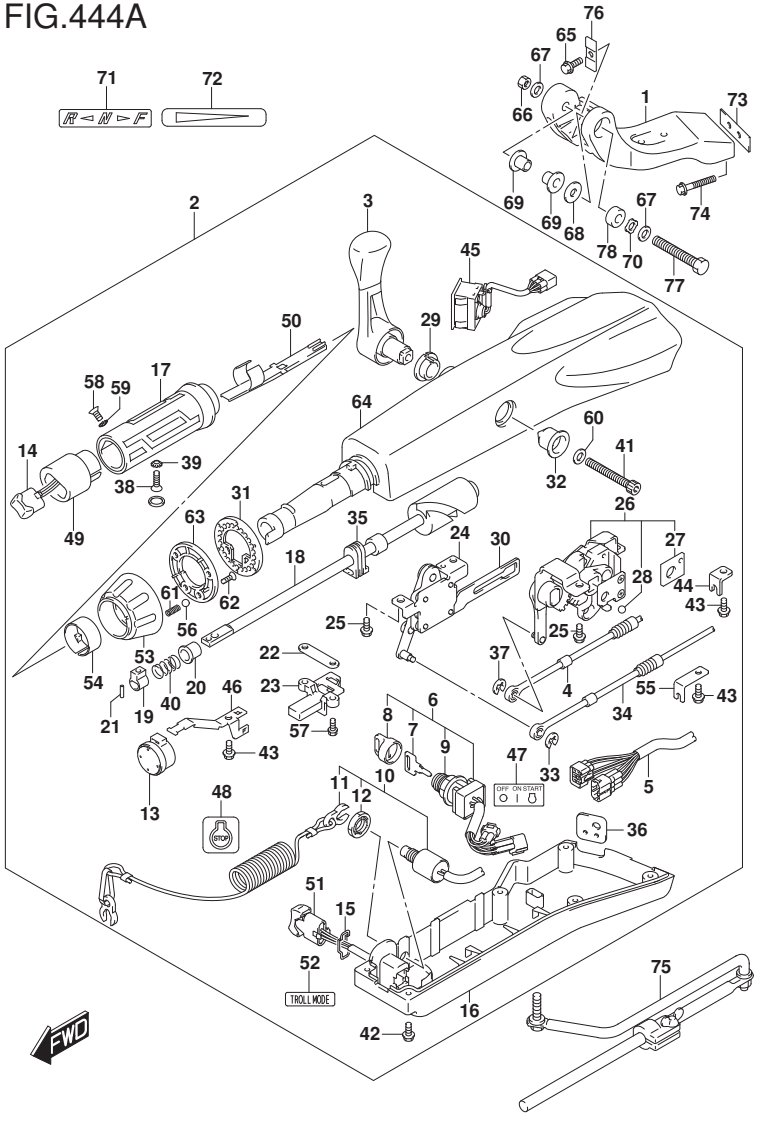

FIG.444A (1-L-12) TILLER HANDLE (DF70ATH)(DF90ATH)

REF NO.	PART NO.	DESCRIPTION	Q'TY	REMARKS
1	43761-88L01-YAY	BRACKET, TILLER HANDLE (BLACK)	1	
2	63110-87L15-YAY	HANDLE ASSY, TILLER (BLACK)	1	
3	21110-88L00	.LEVER, SHIFT	1	
4	23230-90J10	.CABLE, SHIFT	1	
5	36620-87L01	.WIRE ASSY, HARNESS	1	
6	37110-87L02	.SWITCH ASSY, IGNITION	1	
7-1	37141-99E00	..KEY (931)	1	
7-2	37141-99E10	..KEY (932)	1	
7-3	37141-99E20	..KEY (933)	1	
7-4	37141-99E30	..KEY (934)	1	
7-5	37141-99E40	..KEY (935)	1	
7-6	37141-99E50	..KEY (936)	1	
7-7	37141-99E60	..KEY (937)	1	
7-8	37141-99E70	..KEY (938)	1	
7-9	37141-99E80	..KEY (939)	1	
7-10	37141-99E90	..KEY (940)	1	
7-11	37141-99EA0	..KEY (941)	1	
7-12	37141-99EB0	..KEY (942)	1	
8	37143-99E01	..CAP, KEY	1	
9	37149-93J00	..CAP, CYLINDER BODY	1	
10	37820-87L11	.SWITCH ASSY, EMERGENCY	1	
11	37823-92E02	..PLATE, LOCK	1	
12	37826-92J10	..NUT	1	
13	38500-93J90	.BUZZER	1	
14	37850-87L01	.SWITCH ASSY, PTT	1	
15	37852-87J00	.PLATE, TRIM SWITCH	1	
16	63121-88L10	.COVER, UNDER	1	

FIG.444A

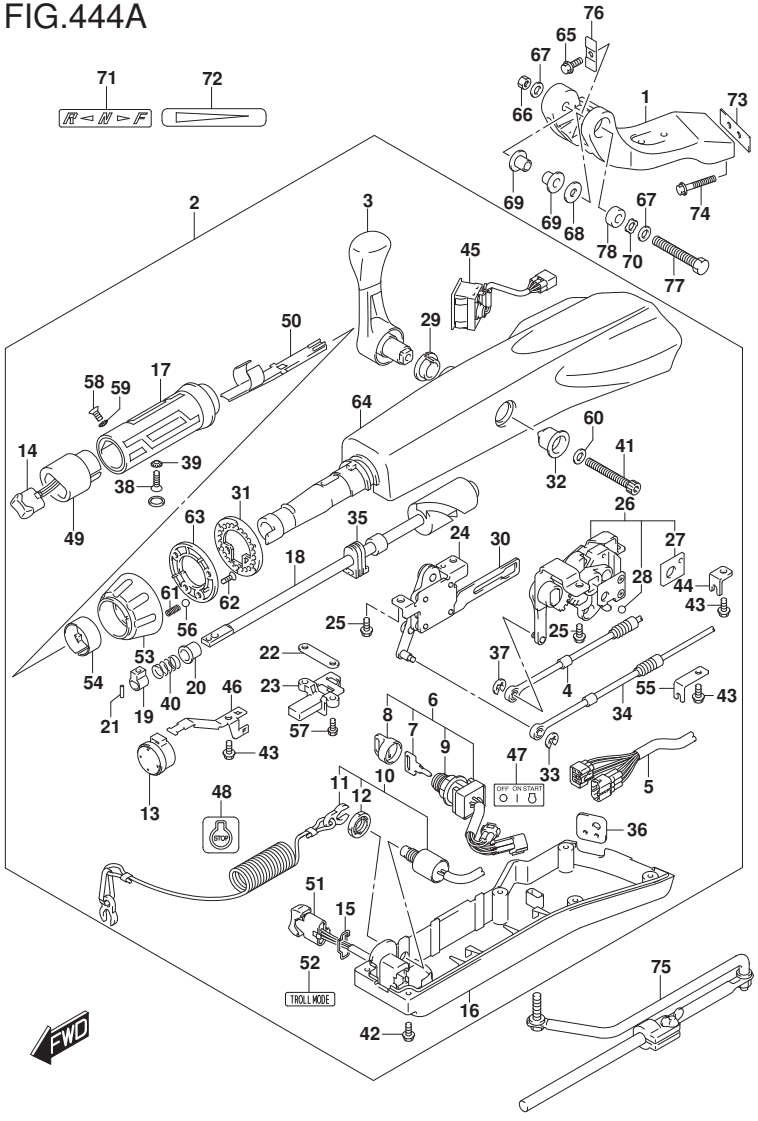

FIG.444A (1-L-13) TILLER HANDLE (DF70ATH)(DF90ATH)

REF NO.	PART NO.	DESCRIPTION	Q'TY	REMARKS
17	63210-88L00	.GRIP, HANDLE	1	
18	63221-88L00	.SHAFT, THROTTLE	1	
19	63223-92D00	.STOPPER, HANDLE ROD	1	
20	63225-88L00	.BUSH, HANDLE ROD	1	
21	63227-93200	.PIN, HANDLE ROD	1	
22	63235-88L00	.PLATE, THROTTLE SHAFT	1	
23	63246-88L00	.STOPPER THROTTLE ADJ	1	
24	63250-88L00	.ARM ASSY, THROTTLE	1	
25	63251-87J00	.BOLT, SHIFT GEAR ASSY	4	
26	63260-88L00	.GEAR ASSY, SHIFT	1	
27	63272-87J00	..PLATE, BALL GUIDE	1	
28	63273-87J00	..BALL	1	
29	63262-87J00	.BUSH, SHIFT LEVER	1	
30	63271-87J00	.PLATE, LOCK	1	
31	63248-99J00	.PLATE, THROTTLE ADJ NOTCH	1	
32	63261-87J00	.BUSH, SHIFT GEAR	1	
33	63274-87J00	.E RING	1	
34	63610-87J00	.CABLE, THROTTLE	1	
35	37853-88L90	.GROMMET, PTT SWITCH LEAD	1	
36	63626-88L00	.GROMMET, WIRE HARNESS	1	
37	67292-87J00	.E RING	2	
38	09126-06015	.SCREW (6X23)	1	
39	09163-06001	.LOCK WASHER	1	
40	09440-12027	.SPRING	1	
41	21112-88L00	.BOLT SHIFT LEVER	1	
42	09125-05047	.SCREW (5X14)	6	
43	63611-88L00	.BOLT CLAMP BRACKET	3	

DF90A_E01_020_444A
TILLER HANDLE

FIG.444A

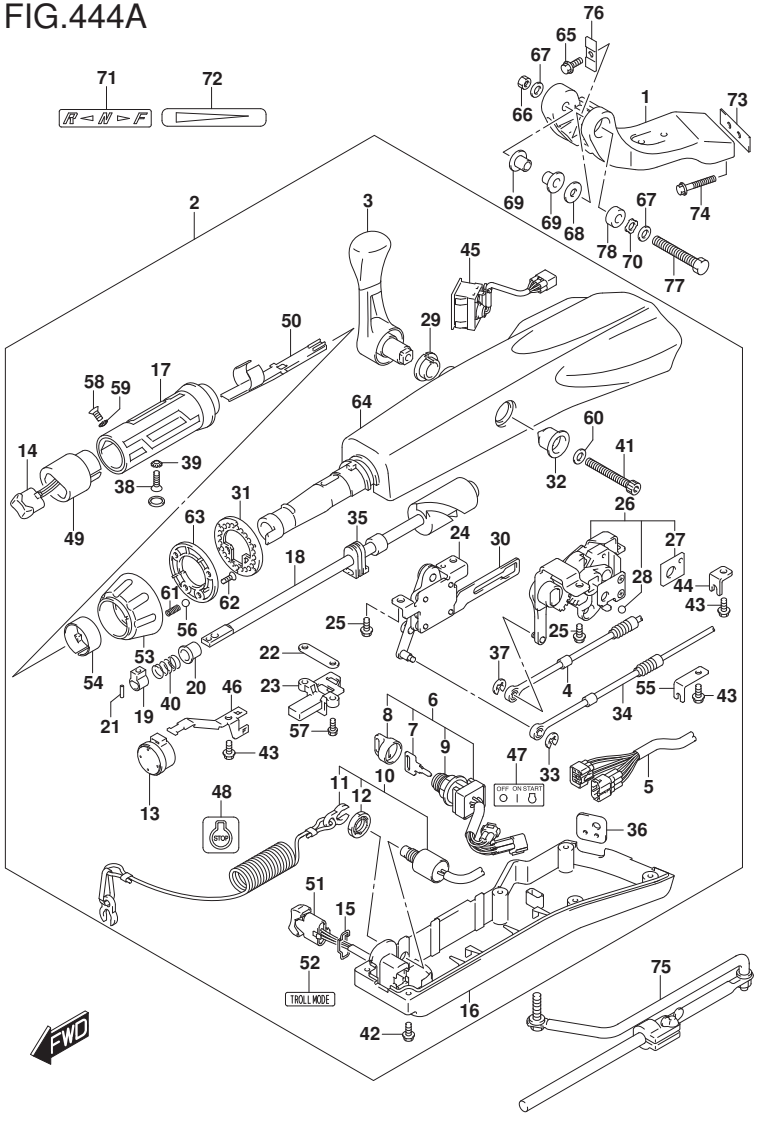

FIG.444A (1-L-14) TILLER HANDLE (DF70ATH)(DF90ATH)

REF NO.	PART NO.	DESCRIPTION	Q'TY	REMARKS
44	63612-87J00	.BRACKET, CLAMP	1	
45	34200-87L00	.TACHOMETER ASSY, WITH MONITOR	1	
46	36617-88L90	.CLAMP PLATE, MAIN HARNESS	1	
47	37112-88L91	.LABEL, IGNITION SWITCH	1	
48	37835-91J00-YAY	.LABEL, STOP (BLACK)	1	
49	37851-88L90	.BASE, PTT SWITCH	1	
50	37852-88L90	.HARNESS, GUIDE	1	
51	37861-87L11	.SWITCH, TROLLING CONTROL	1	
52	37864-88L91	.LABEL, TROLL MODE	1	
53	63244-99J00	.KNOB, THROTTLE ADJ	1	
54	63245-99J00	.BUSH, THROTTLE ADJ	1	
55	63612-88L10	.BRACKET, CLAMP SHIFT	1	
56	09260-10006	.BALL	1	
57	63251-88L90	.BOLT	2	
58	37855-88L90	.SCREW, THROTTLE GRIP	1	
59	37854-88L90	.WASHER, THROTTLE GRIP	1	
60	63258-88L00	.WASHER	1	
61	09440-06037	.SPRING	1	
62	03522-05169	.SCREW	3	
63	63247-99J00	.PLATE, THROTTLE ADJ KNOB	1	
64	63111-88L00-YAY	.HOUSING, TILLER HANDLE (BLACK)	1	
65	09116-08137	BOLT (8X22)	1	
66	09159-12014	NUT	1	
67	09160-12066	WASHER (12.5X22X2.5)	2	
68	09160-12124	WASHER (12.5X32X1.5)	1	
69	63115-88L01	BUSH, TILLER HANDLE PIVOT	2	

FIG.444A

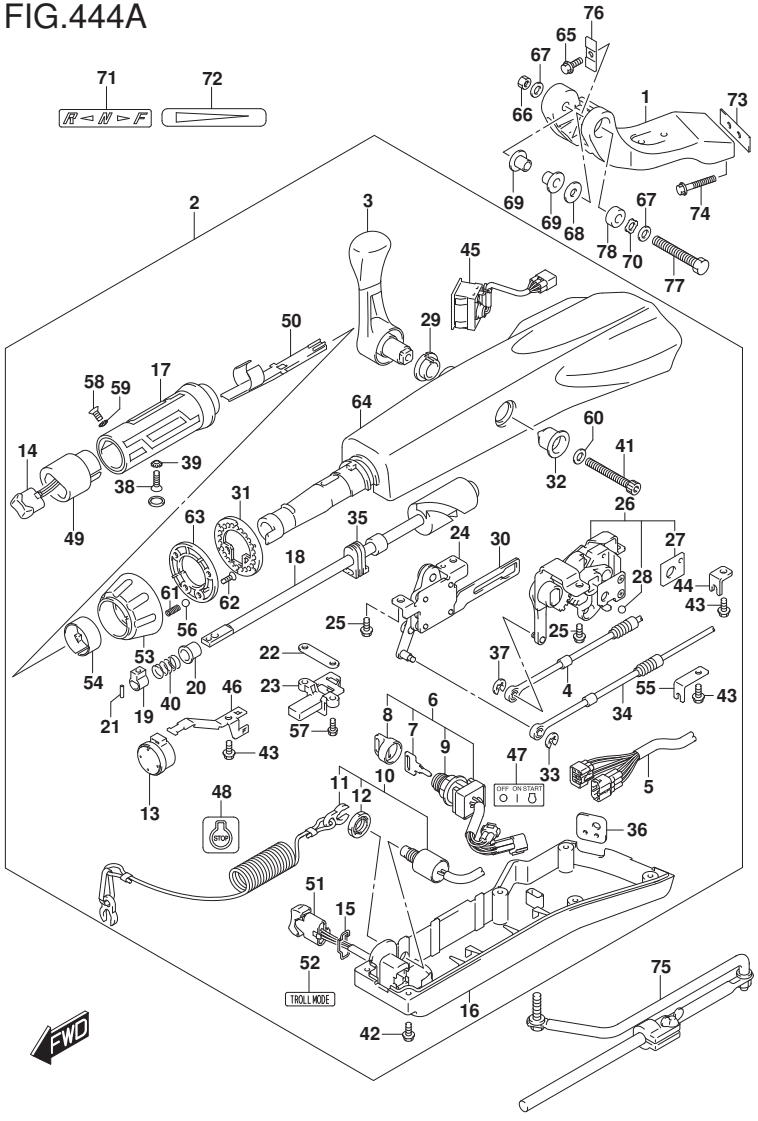

FIG.444A (1-L-15) TILLER HANDLE (DF70ATH)(DF90ATH)

REF NO.	PART NO.	DESCRIPTION	Q'TY	REMARKS
70	09164-13010	WASHER	1	
71	21131-88L02	MARK, CLUTCH SHIFT	1	
72	63215-93110	MARK, HANDLE GRIP	1	
73	43776-87L00	SPACER, STRG BRKT	1	
74	09116-10150	BOLT (10X55)	2	
75	43770-99E03	ADJUSTER ASSY, STEERING	1	
76	63132-88L00	STOPPER, TILLER HANDLE	1	
77	43762-88L00	BOLT TILLER HANDLE PIVOT	1	
78	43768-88L00	SPACER, TILLER HANDLE	1	

DF70ATH E01
DF70ATH E40
DF90ATH E01
DF90ATH E40

FIG.444B

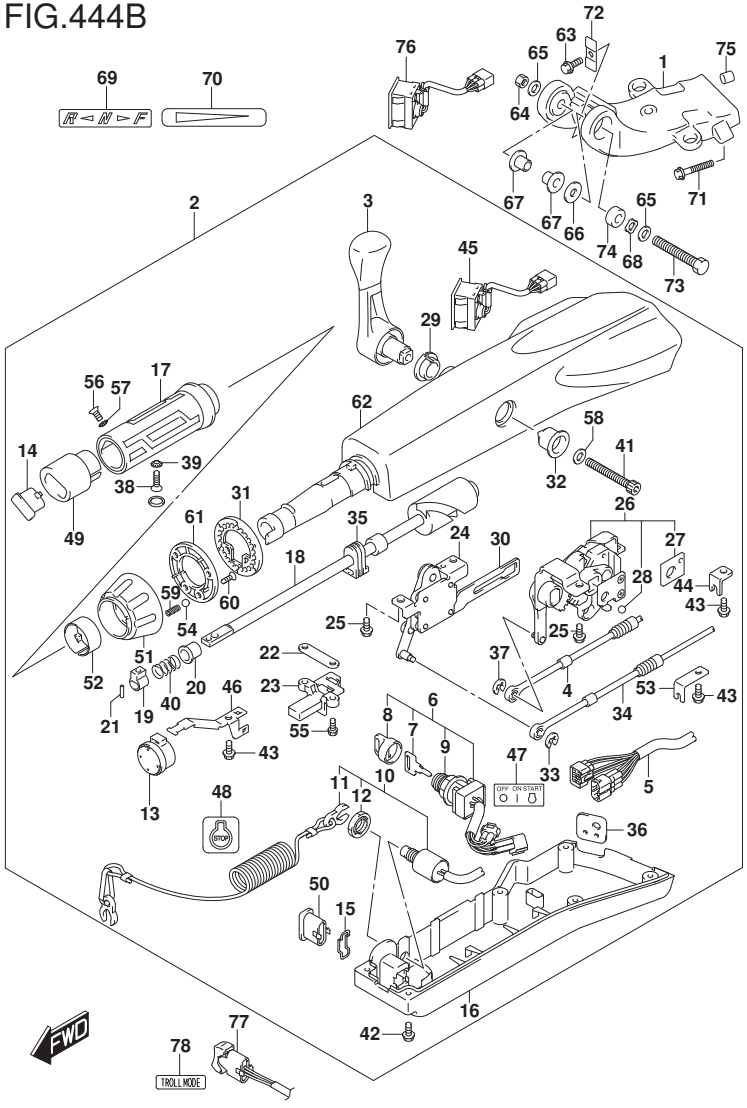

FIG.444B (2-B-2) TILLER HANDLE (DF90AWQH)

REF NO.	PART NO.	DESCRIPTION	Q'TY	REMARKS
1	43761-87L00-YAY	BRACKET, TILLER HANDLE (BLACK)	1	
2	63110-87L20-YAY	HANDLE ASSY, TILLER (BLACK)	1	
3	21110-88L00	.LEVER, SHIFT	1	
4	23230-90J10	.CABLE, SHIFT	1	
5	36620-87L10	.WIRE ASSY, HARNESS	1	
6	37110-87L02	.SWITCH ASSY, IGNITION	1	
7-1	37141-99E00	..KEY (931)	1	
7-2	37141-99E10	..KEY (932)	1	
7-3	37141-99E20	..KEY (933)	1	
7-4	37141-99E30	..KEY (934)	1	
7-5	37141-99E40	..KEY (935)	1	
7-6	37141-99E50	..KEY (936)	1	
7-7	37141-99E60	..KEY (937)	1	
7-8	37141-99E70	..KEY (938)	1	
7-9	37141-99E80	..KEY (939)	1	
7-10	37141-99E90	..KEY (940)	1	
7-11	37141-99EA0	..KEY (941)	1	
7-12	37141-99EB0	..KEY (942)	1	
8	37143-99E01	..CAP, KEY	1	
9	37149-93J00	..CAP, CYLINDER BODY	1	
10	37820-87L11	.SWITCH ASSY, EMERGENCY	1	
11	37823-92E02	..PLATE, LOCK	1	
12	37826-92J10	..NUT	1	
13	38500-93J90	.BUZZER	1	
14	67263-88L00	.CAP,SWITCH	1	
15	37852-87J00	.PLATE, TRIM SWITCH	1	
16	63121-88L10	.COVER, UNDER	1	

DF90A_E01_020_444B
TILLER HANDLE

FIG.444B

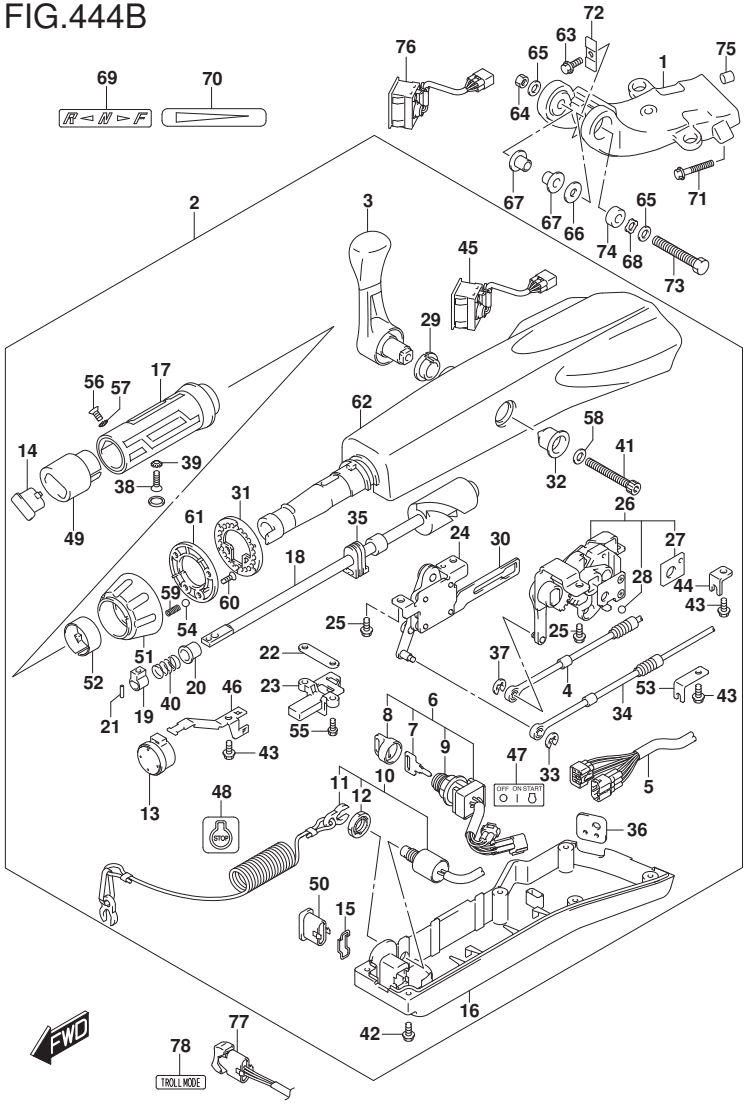

FIG.444B (2-B-3) TILLER HANDLE (DF90AWQH)

REF NO.	PART NO.	DESCRIPTION	Q'TY	REMARKS
17	63210-88L00	.GRIP, HANDLE	1	
18	63221-88L00	.SHAFT, THROTTLE	1	
19	63223-92D00	.STOPPER, HANDLE ROD	1	
20	63225-88L00	.BUSH, HANDLE ROD	1	
21	63227-93200	.PIN, HANDLE ROD	1	
22	63235-88L00	.PLATE, THROTTLE SHAFT	1	
23	63246-88L00	.STOPPER THROTTLE ADJ	1	
24	63250-88L00	.ARM ASSY, THROTTLE	1	
25	63251-87J00	.BOLT, SHIFT GEAR ASSY	4	
26	63260-88L00	.GEAR ASSY, SHIFT	1	
27	63272-87J00	..PLATE, BALL GUIDE	1	
28	63273-87J00	..BALL	1	
29	63262-87J00	.BUSH, SHIFT LEVER	1	
30	63271-87J00	.PLATE, LOCK	1	
31	63248-99J00	.PLATE, THROTTLE ADJ NOTCH	1	
32	63261-87J00	.BUSH, SHIFT GEAR	1	
33	63274-87J00	.E RING	1	
34	63610-87J00	.CABLE, THROTTLE	1	
35	37853-88L90	.GROMMET, PTT SWITCH LEAD	1	
36	63626-88L00	.GROMMET, WIRE HARNESS	1	
37	67292-87J00	.E RING	2	
38	09126-06015	.SCREW (6X23)	1	
39	09163-06001	.LOCK WASHER	1	
40	09440-12027	.SPRING	1	
41	21112-88L10	.BOLT SHIFT LEVER	1	
42	09125-05047	.SCREW (5X14)	6	
43	63611-88L00	.BOLT CLAMP BRACKET	3	

DF90A_E01_020_444B
TILLER HANDLE

FIG.444B

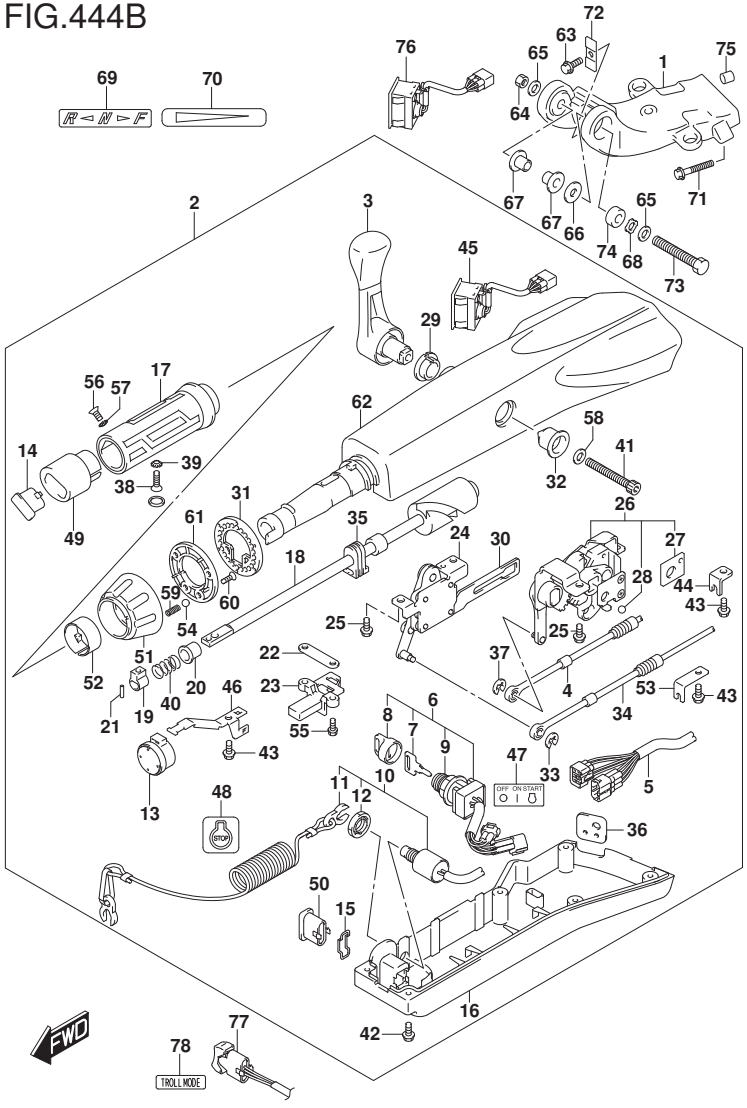

FIG.444B (2-B-4) TILLER HANDLE (DF90AWQH)

REF NO.	PART NO.	DESCRIPTION	Q'TY	REMARKS
44	63612-87J00	.BRACKET, CLAMP	1	
45	36360-87L00	.WARNING INDICATOR	1	
46	36617-88L90	.CLAMP PLATE, MAIN HARNESS	1	
47	37112-88L91	.LABEL, IGNITION SWITCH	1	
48	37835-91J00-YAY	.LABEL, STOP (BLACK)	1	
49	37851-88L90	.BASE, PTT SWITCH	1	
50	67263-88L00	.CAP,SWITCH	1	
51	63244-99J00	.KNOB, THROTTLE ADJ	1	
52	63245-99J00	.BUSH, THROTTLE ADJ	1	
53	63612-88L10	.BRACKET, CLAMP SHIFT	1	
54	09260-10006	.BALL	1	
55	63251-88L90	.BOLT	2	
56	37855-88L90	.SCREW, THROTTLE GRIP	1	
57	37854-88L90	.WASHER, THROTTLE GRIP	1	
58	63258-88L00	.WASHER	1	
59	09440-06037	.SPRING	1	
60	03522-05169	.SCREW	3	
61	63247-99J00	.PLATE, THROTTLE ADJ KNOB	1	
62	63111-88L00-YAY	.HOUSING, TILLER HANDLE (BLACK)	1	
63	09116-08137	BOLT (8X22)	1	
64	09159-12014	NUT	1	
65	09160-12066	WASHER (12.5X22X2.5)	2	
66	09160-12124	WASHER (12.5X32X1.5)	1	
67	63115-88L01	BUSH, TILLER HANDLE PIVOT	2	

FIG.444B

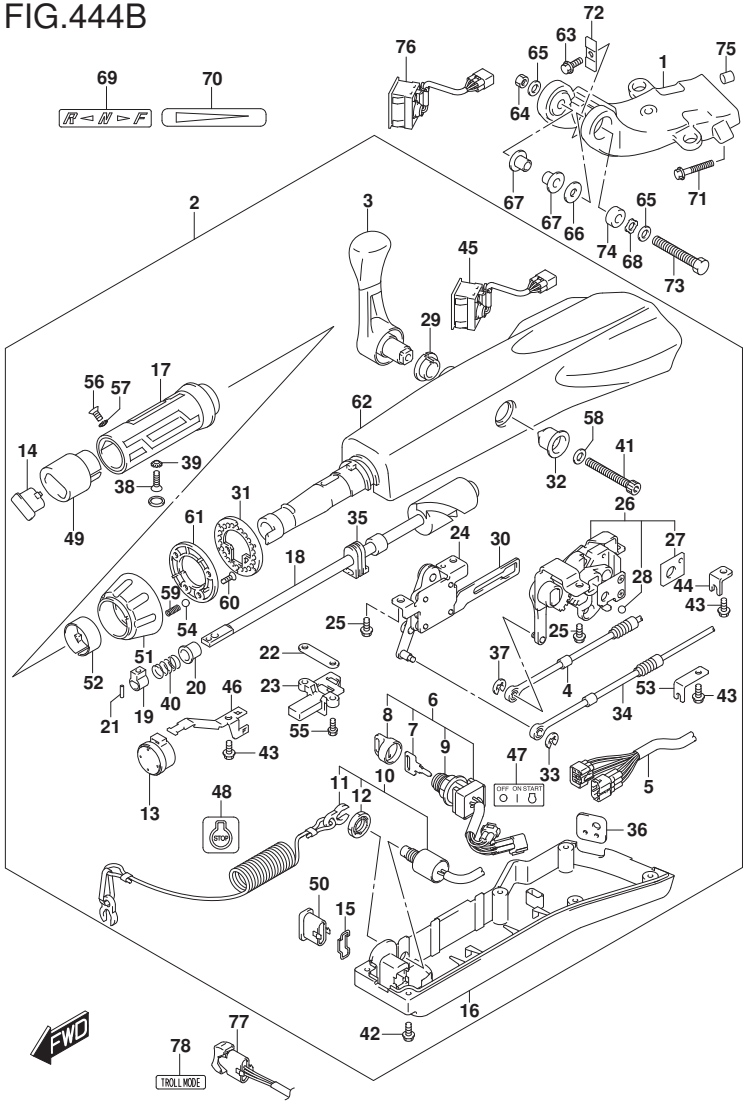

FIG.444B (2-B-5) TILLER HANDLE (DF90AWQH)

REF NO.	PART NO.	DESCRIPTION	Q'TY	REMARKS
68	09164-13010	WASHER	1	
69	21131-88L02	MARK, CLUTCH SHIFT	1	
70	63215-93110	MARK, HANDLE GRIP	1	
71	09116-10150	BOLT (10X55)	2	
72	63132-88L00	STOPPER, TILLER HANDLE	1	
73	43762-88L00	BOLT TILLER HANDLE PIVOT	1	
74	43768-88L00	SPACER, TILLER HANDLE	1	
75	09202-08006	PIN(8X12)	2	
76	34200-87L00	TACHOMETER ASSY WITH MONITOR	1	OPT
77	37861-87L11	SWITCH, TROLLING CONTROL	1	OPT
78	37864-88L91	LABEL, TROLL MODE	1	OPT

DF90AWQH E40

FIG.460A

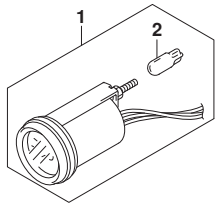

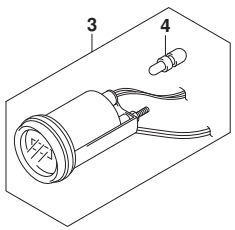

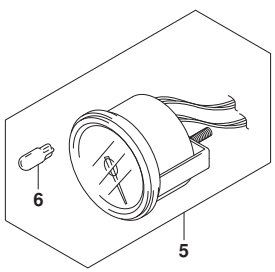

FIG.460A (2-B-6) METER (DF70A)(DF80A)(DF90A)(DF100B)

REF NO.	PART NO.	DESCRIPTION	Q'TY	REMARKS
1-1	34800-93J02	METER ASSY, TRIM	1	BLACK
1-2	34800-93J13	METER ASSY, TRIM	1	WHITE
2	09471-12108	.BULB (12V1.7W,T6.5)	1	
3-1	34500-93J02	METER ASSY, HOUR	1	BLACK
3-2	34500-93J13	METER ASSY, HOUR	1	WHITE
4	09471-12103	.BULB (12V3W,T6.5)	1	
5-1	34200-93J02	TACHOMETER ASSY, WITH MONITOR	1	BLACK
5-2	34200-93J14	TACHOMETER ASSY, WITH MONITOR	1	WHITE
6	09471-12077	.BULB (12V1.7W,T10,WB121)	1	

DF70A E01
DF70A E40
DF80A E01
DF80A E40
DF90A E01
DF90A E40
DF100B E01
DF100B E40

FIG.501A

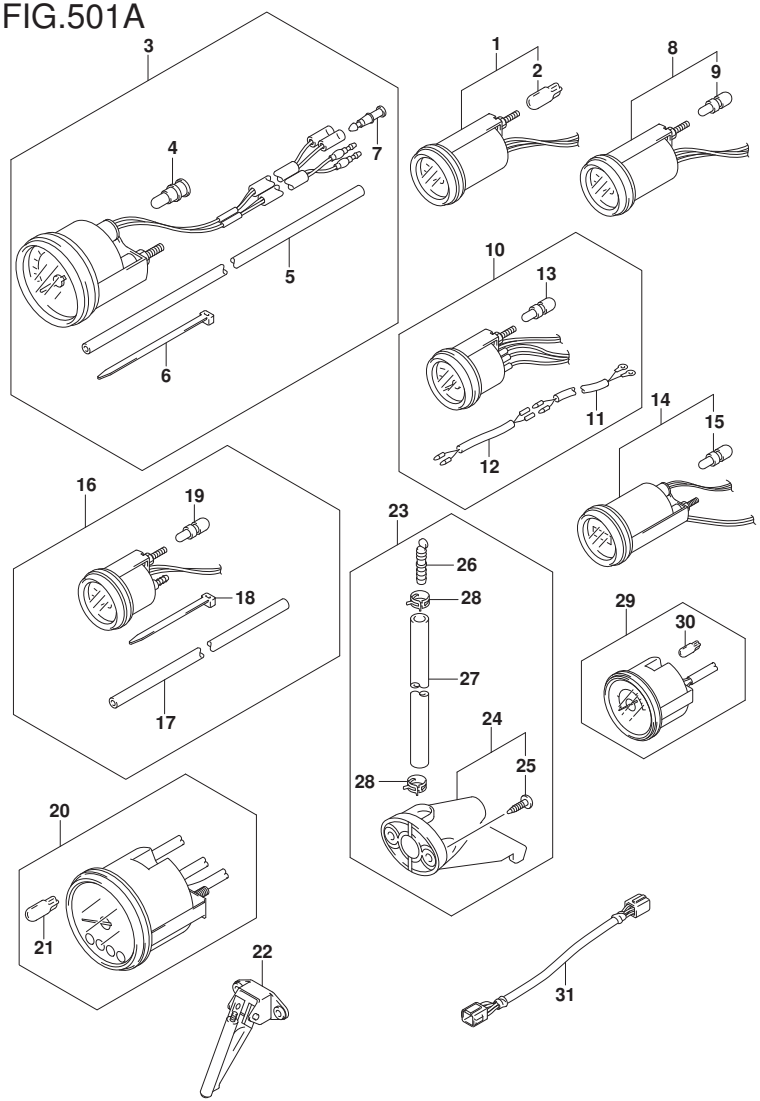

FIG.501A (2-B-7) OPT:METER (DF70A)(DF80A)(DF90A)(DF100B)

REF NO.	PART NO.	DESCRIPTION	Q'TY	REMARKS
1-1	34800-93J02	METER ASSY, TRIM	1	BLACK
1-2	34800-93J13	METER ASSY, TRIM	1	WHITE
2	09471-12108	.BULB (12V1.7W,T6.5)	1	
3-1	34100-93J02	SPEEDOMETER ASSY	1	MAX 130KM/H BLACK
3-2	34100-93J13	SPEEDOMETER ASSY	1	MAX 130KM/H WHITE
3-3	34100-93J22	SPEEDOMETER ASSY	1	MAX 80KM/H BLACK
3-4	34100-93J33	SPEEDOMETER ASSY	1	MAX 80KM/H WHITE
3-5	34100-93J42	SPEEDOMETER ASSY	1	MAX 45KNOTS BLACK
3-6	34100-93J53	SPEEDOMETER ASSY	1	MAX 45KNOTS WHITE
3-7	34100-93J62	SPEEDOMETER ASSY	1	MAX 65KNOTS WHITE
4	09471-12028	.BULB (12V3.4W,T10)	1	
5	34191-92E00	.TUBE	1	
6	09407-14407	.CLAMP (L:145)	2	
7	36615-96300	.TERMINAL, RESIN	2	
8-1	34600-93J02	METER ASSY, VOLTAGE	1	BLACK
8-2	34600-93J13	METER ASSY, VOLTAGE	1	WHITE
9	09471-12103	.BULB (12V3W,T6.5)	1	
10-1	34300-93J02	GAUGE ASSY, FUEL	1	BLACK
10-2	34300-93J13	GAUGE ASSY, FUEL	1	WHITE
11	34310-92E00	.LEAD, FUEL GAUGE	1	
12	34360-92E00	.ADAPTER, FUEL GAUGE	1	
13	09471-12103	.BULB (12V3W,T6.5)	1	

DF90A_E01_020_501A
OPT:METER

FIG.501A

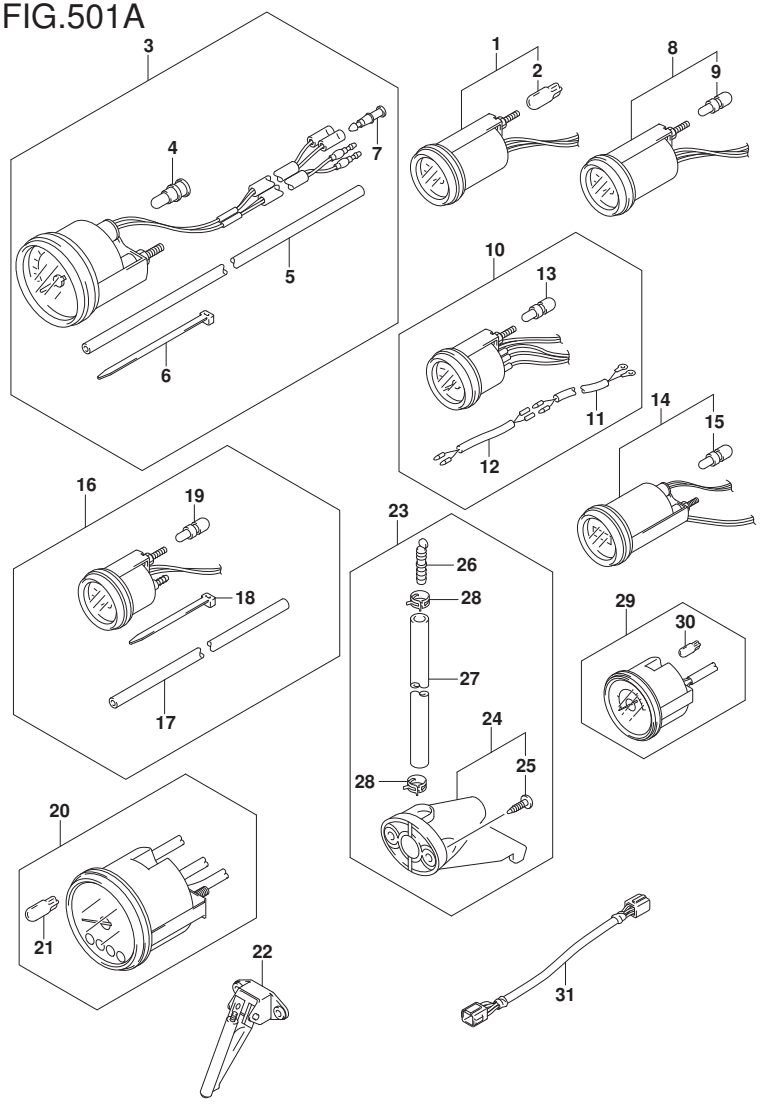

FIG.501A (2-B-8) OPT:METER (DF70A)(DF80A)(DF90A)(DF100B)

REF NO.	PART NO.	DESCRIPTION	Q'TY	REMARKS
14-1	34500-93J02	METER ASSY, HOUR	1	BLACK
14-2	34500-93J13	METER ASSY, HOUR	1	WHITE
15	09471-12103	.BULB (12V3W,T6.5)	1	
16-1	34650-93J22	GAUGE ASSY, WATER PRESSURE	1	15PSI BLACK
16-2	34650-93J33	GAUGE ASSY, WATER PRESSURE	1	15PSI WHITE
17	34191-92E00	.TUBE	1	
18	09407-14407	.CLAMP (L:145)	2	
19	09471-12103	.BULB (12V3W,T6.5)	1	
20-1	34200-93J02	TACHOMETER ASSY, WITH MONITOR	1	BLACK
20-2	34200-93J14	TACHOMETER ASSY, WITH MONITOR	1	WHITE
21	09471-12077	.BULB (12V1.7W,T10,WB121)	1	
22	34190-87D00	SENDER ASSY, SPEEDOMETER	1	
23	34120-98J01	KIT, SPEEDOMETER SUB	1	
24	34190-95500	.SENDER ASSY, SPEEDOMETER	1	
25	03112-0630B	..SCREW	2	
26	55127-87D00	.UNION, SPEEDOMETER HOSE	1	
27	09355-40805-00B	.HOSE (4X8X2000)	1	L:2000->1700
28	09407-10404	.CLAMP (L:100)	2	
29-1	34200-93J42	TACHOMETER ASSY, WITH MONITOR	1	BLACK
29-2	34200-93J53	TACHOMETER ASSY, WITH MONITOR	1	WHITE
30	09471-12077	.BULB (12V1.7W,T10,WB121)	1	
31	36682-92E00	WIRE, TRIM METER	1	

DF70A E01
DF70A E40
DF80A E01
DF80A E40
DF90A E01
DF90A E40
DF100B E01
DF100B E40

DF90A_E01_020_501A
OPT:METER

FIG.501B

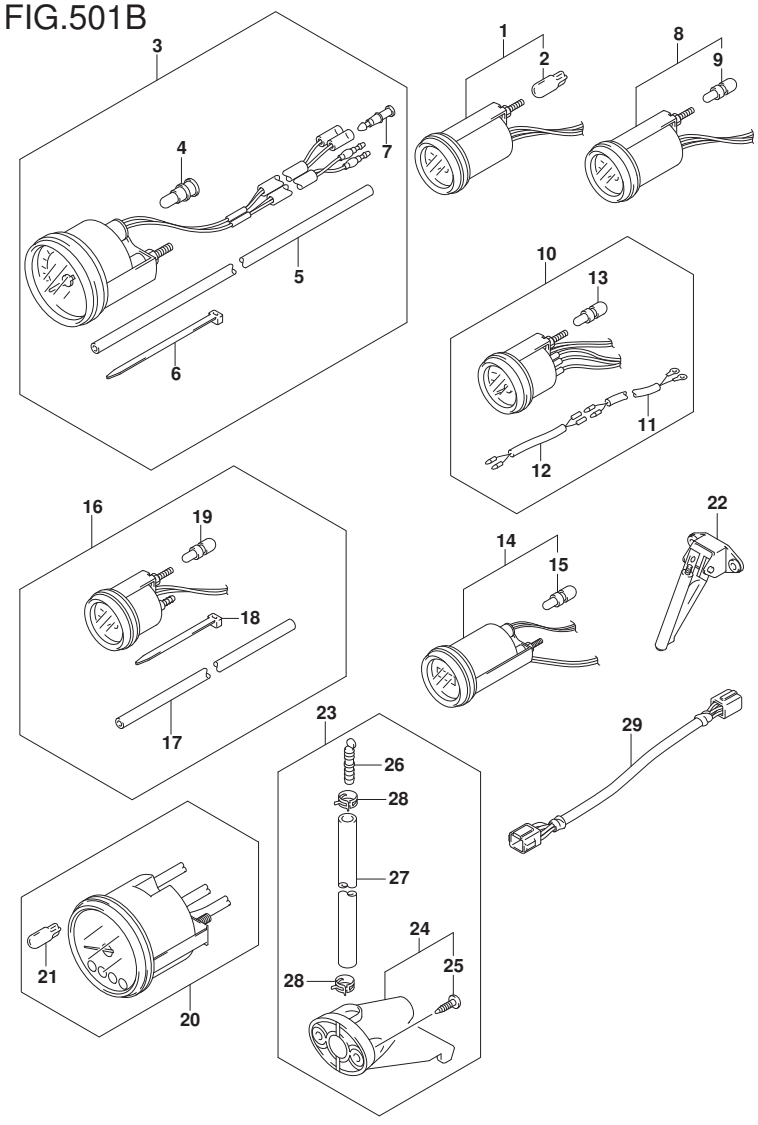

FIG.501B (2-B-9) OPT:METER (DF70ATH)(DF90ATH)

REF NO.	PART NO.	DESCRIPTION	Q'TY	REMARKS
1-1	34800-93J02	METER ASSY, TRIM	1	BLACK
1-2	34800-93J13	METER ASSY, TRIM	1	WHITE
2	09471-12108	.BULB (12V1.7W,T6.5)	1	
3-1	34100-93J02	SPEEDOMETER ASSY	1	MAX 130KM/H BLACK
3-2	34100-93J13	SPEEDOMETER ASSY	1	MAX 130KM/H WHITE
3-3	34100-93J22	SPEEDOMETER ASSY	1	MAX 80KM/H BLACK
3-4	34100-93J33	SPEEDOMETER ASSY	1	MAX 80KM/H WHITE
3-5	34100-93J42	SPEEDOMETER ASSY	1	MAX 45KNOTS BLACK
3-6	34100-93J53	SPEEDOMETER ASSY	1	MAX 45KNOTS WHITE
3-7	34100-93J62	SPEEDOMETER ASSY	1	MAX 65KNOTS WHITE
4	09471-12028	.BULB (12V3.4W,T10)	1	
5	34191-92E00	.TUBE	1	
6	09407-14407	.CLAMP (L:145)	2	
7	36615-96300	.TERMINAL, RESIN	2	
8-1	34600-93J02	METER ASSY, VOLTAGE	1	BLACK
8-2	34600-93J13	METER ASSY, VOLTAGE	1	WHITE
9	09471-12103	.BULB (12V3W,T6.5)	1	
10-1	34300-93J02	GAUGE ASSY, FUEL	1	BLACK
10-2	34300-93J13	GAUGE ASSY, FUEL	1	WHITE
11	34310-92E00	.LEAD, FUEL GAUGE	1	
12	34360-92E00	.ADAPTER, FUEL GAUGE	1	
13	09471-12103	.BULB (12V3W,T6.5)	1	
14-1	34500-93J02	METER ASSY, HOUR	1	BLACK
14-2	34500-93J13	METER ASSY, HOUR	1	WHITE
15	09471-12103	.BULB (12V3W,T6.5)	1	
16-1	34650-93J22	GAUGE ASSY, WATER PRESSURE	1	15PSI BLACK
16-2	34650-93J33	GAUGE ASSY, WATER PRESSURE	1	15PSI WHITE

DF90A_E01_020_501B
OPT:METER

FIG.501B

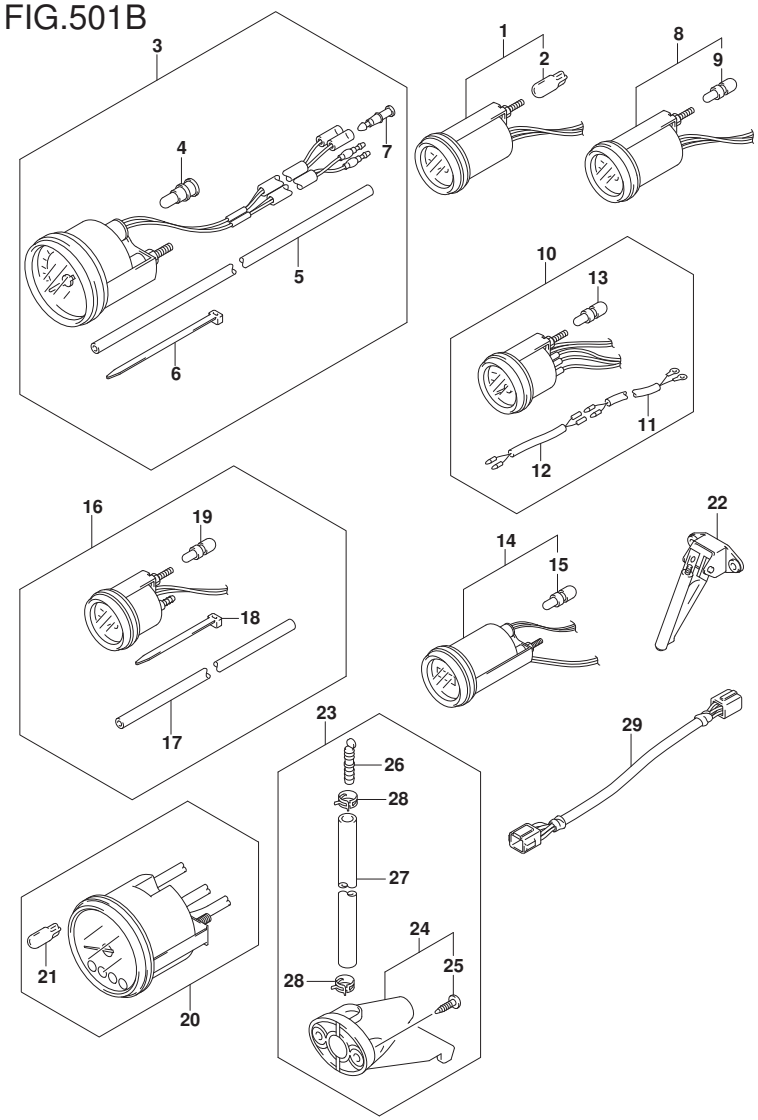

FIG.501B (2-B-10) OPT:METER (DF70ATH)(DF90ATH)

REF NO.	PART NO.	DESCRIPTION	Q'TY	REMARKS
17	34191-92E00	.TUBE	1	
18	09407-14407	.CLAMP (L:145)	2	
19	09471-12103	.BULB (12V3W,T6.5)	1	
20-1	34200-93J02	TACHOMETER ASSY, WITH MONITOR	1	BLACK
20-2	34200-93J14	TACHOMETER ASSY, WITH MONITOR	1	WHITE
21	09471-12077	.BULB (12V1.7W,T10,WB121)	1	
22	34190-87D00	SENDER ASSY, SPEEDOMETER	1	
23	34120-98J01	KIT, SPEEDOMETER SUB	1	
24	34190-95500	.SENDER ASSY, SPEEDOMETER	1	
25	03112-0630B	..SCREW	2	
26	55127-87D00	.UNION, SPEEDOMETER HOSE	1	
27	09355-40805-00B	.HOSE (4X8X2000)	1	L:2000->1700
28	09407-10404	.CLAMP (L:100)	2	
29	36682-92E00	WIRE, TRIM METER	1	

DF70ATH E01
DF70ATH E40
DF90ATH E01
DF90ATH E40

DF90A_E01_020_501B
OPT:METER

FIG.507A

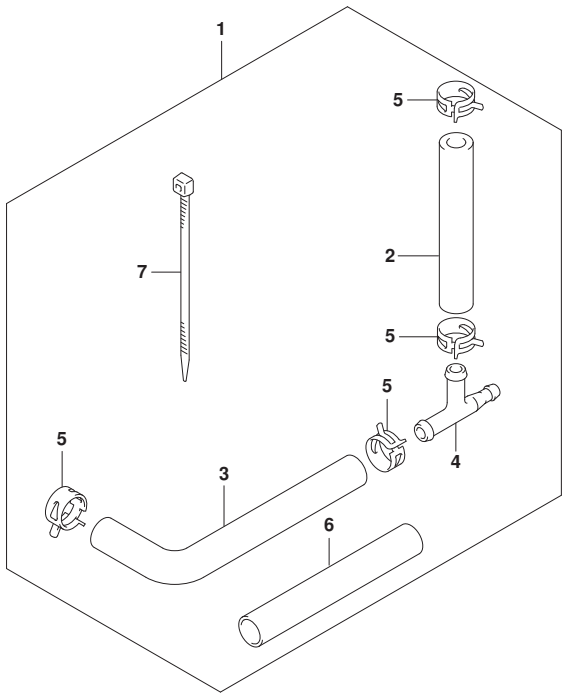

FIG.507A (2-B-11) OPT:WATER PRESSURE GAUGE SUB KIT

REF NO.	PART NO.	DESCRIPTION	Q'TY	REMARKS
1	34660-90J04	WATER PRESSURE GAUGE SUB KIT	1	
2	09352-50006-600	.HOSE (5X9X600)	1	L:600->160
3	09352-50006-600	.HOSE (5X9X600)	1	L:600->210
4	09367-06006	.3 WAY	1	
5	09401-08413	.CLIP	4	
6	18498-99EA1	.PROTECTOR (L:80)	1	
7	09407-20405	.CLAMP (L:250)	1	

DF90A_E01_020_507A
OPT:WATER PRESSURE GAUGE SUB KIT

FIG.508A

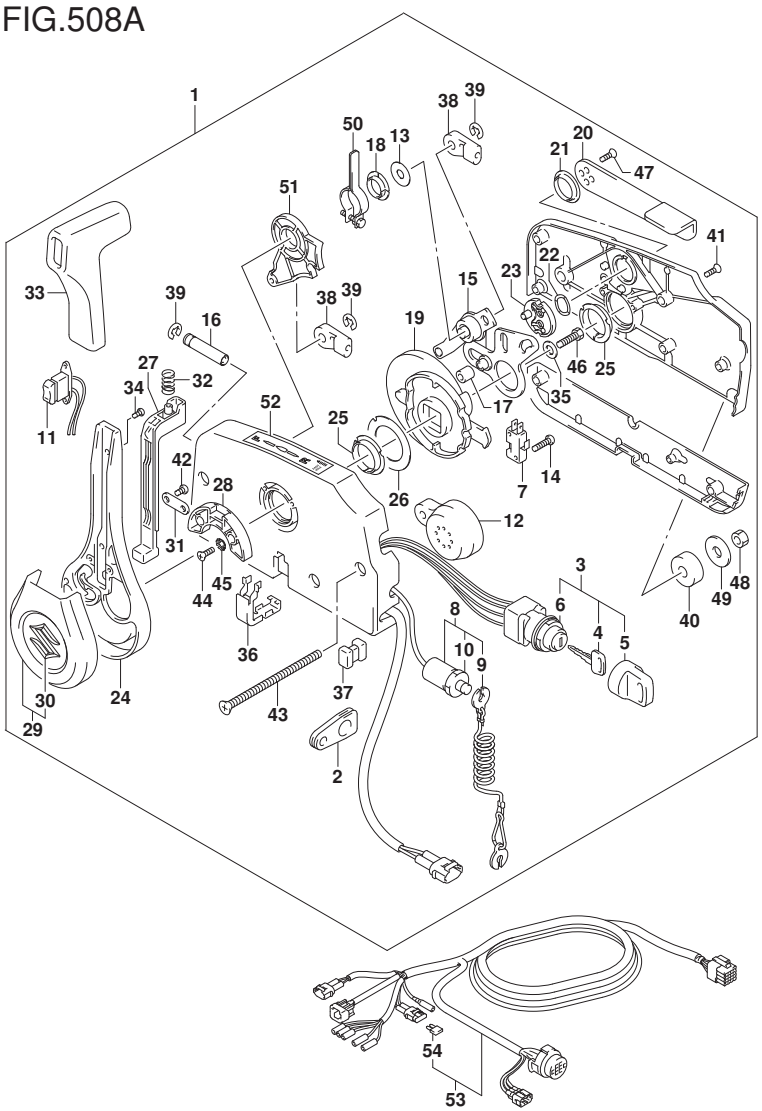

FIG.508A (2-B-12) OPT:REMOTE CONTROL (N/KEY LESS START) (DF70A)(DF80A)(DF90

REF NO.	PART NO.	DESCRIPTION	Q'TY	REMARKS
1	67200-93J61	REMOTE CONTROL ASSY	1	
2	36628-92E01	.GROMMET, WIRE HARNESS	1	
3	37110-93J12	.SWITCH ASSY, IGNITION	1	
4-1	37141-99E00	..KEY (931)	2	
4-2	37141-99E10	..KEY (932)	2	
4-3	37141-99E20	..KEY (933)	2	
4-4	37141-99E30	..KEY (934)	2	
4-5	37141-99E40	..KEY (935)	2	
4-6	37141-99E50	..KEY (936)	2	
4-7	37141-99E60	..KEY (937)	2	
4-8	37141-99E70	..KEY (938)	2	
4-9	37141-99E80	..KEY (939)	2	
4-10	37141-99E90	..KEY (940)	2	
4-11	37141-99EA0	..KEY (941)	2	
4-12	37141-99EB0	..KEY (942)	2	
5	37143-99E01	..CAP, KEY	2	
6	37149-93J00	..CAP CYLINDER BODY	1	
7	37721-93J91	.SWITCH, NEUTRAL	1	
8	37820-93J11	.SWITCH ASSY, EMERGENCY	1	
9	37823-92E02	..PLATE	1	
10	37826-92J10	..NUT	1	
11	37850-96L00	.SWITCH ASSY, PTT	1	
12	38500-93J90	.BUZZER	1	
13	67212-95600	.WASHER	1	

DF90A_E01_020_508A
OPT:REMOTE CONTROL

FIG.508A

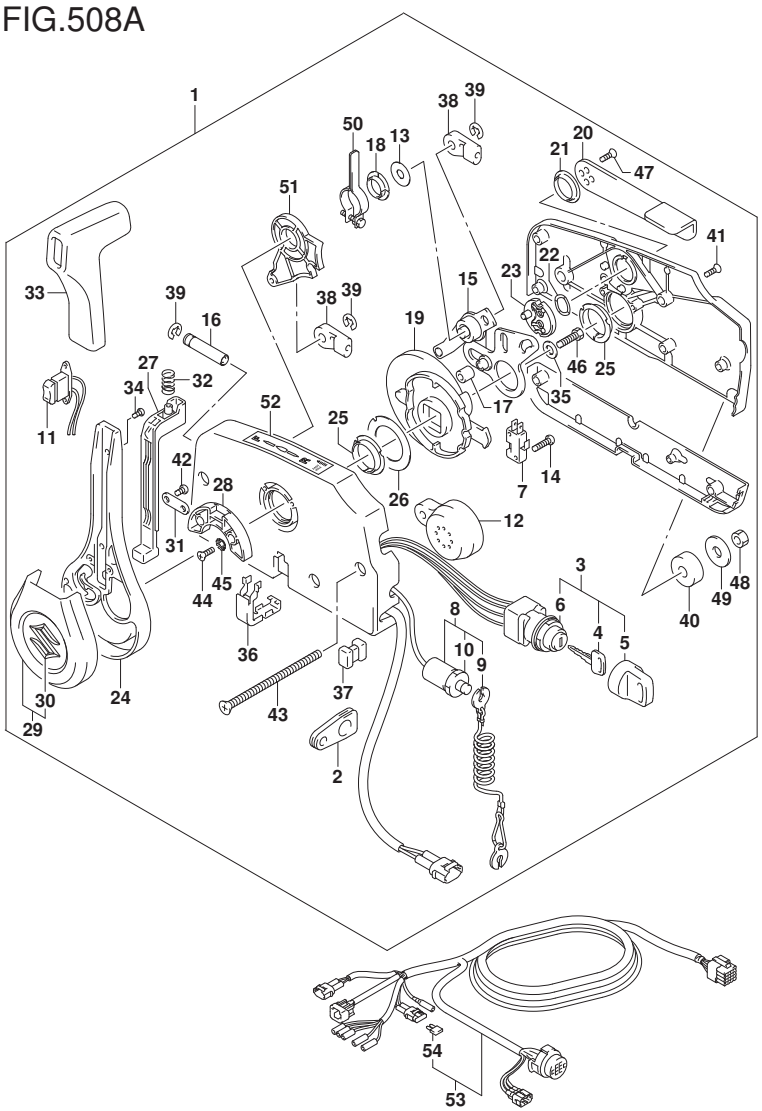

FIG.508A (2-B-13) OPT:REMOTE CONTROL (N/KEY LESS START) (DF70A)(DF80A)(DF90

REF NO.	PART NO.	DESCRIPTION	Q'TY	REMARKS
14	67296-92E11	.SCREW, NEUTRAL SW	2	
15	67220-95630	.PLATE ASSY	1	
16	67223-99E10	.KNOB, BRAKE ADJ	1	
17	67229-95600	.ROLLER	1	
18	67232-95600	.BUSH	1	
19	67238-87D00	.GEAR, DRIVE	1	
20	67241-99E11	.LEVER, FREE THROTTLE	1	
21	67243-95600	.BUSH	1	
22	67244-95600	.WASHER, WAVE	1	
23	67245-95600	.DRUM, FREE THROTTLE	1	
24	67251-96L00	.LEVER, HANDLE	1	
25	67252-95600	.BUSH	2	
26	67253-95600	.WASHER	1	
27	67255-96L00	.ARM, LOCK	1	
28	67256-95600	.HOLDER, NEUT LOCK	1	
29	67257-96L00	.CAP, LEVER	1	
30	77811-54GB0-0PG	..EMBLEM, REAR MARK S (CHROME)	1	
31	67258-99E00	.BRACKET, LOCK ARM	1	
32	67259-87D00	.SPRING, NEUTRAL ARM	1	
33	67261-96L00	.GRIP	1	
34	67296-96L10	.SCREW	2	
35	67264-95600	.WASHER	1	
36	67267-96L00	.COVER, WIRE	1	
37	67273-95601	.SPACER	1	

DF90A_E01_020_508A
OPT:REMOTE CONTROL

FIG.508A

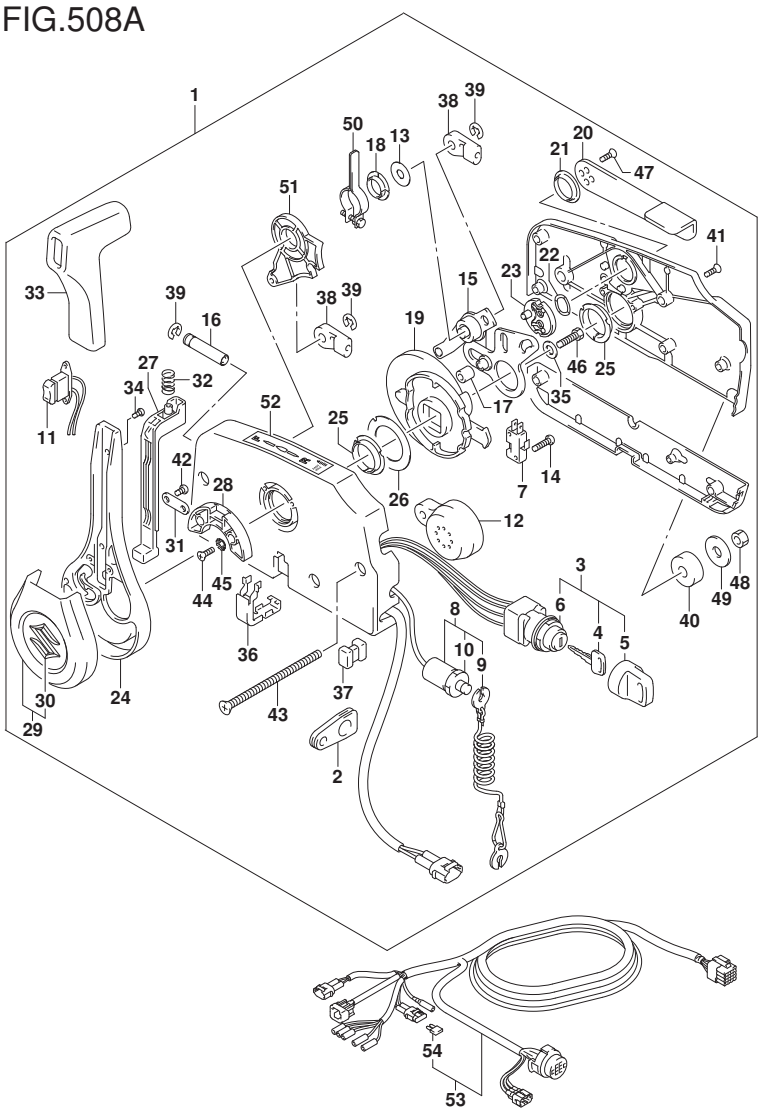

FIG.508A (2-B-14) OPT:REMOTE CONTROL (N/KEY LESS START) (DF70A)(DF80A)(DF90

REF NO.	PART NO.	DESCRIPTION	Q'TY	REMARKS
38	67275-95600	.END, CABLE	2	
39	67292-94300	.E RING	3	
40	67294-95600	.SPACER	3	
41	67296-90J20	.SCREW	5	
42	67296-96L00	.SCREW	2	
43	67296-95630	.SCREW	3	
44	67296-95610	.SCREW	2	
45	67297-95600	.WASHER	2	
46	09100-08232	.BOLT (8X30)	1	
47	67269-96L10	.SCREW (5X12)	2	
48	09140-06020	.NUT	3	
49	67288-94320	.WASHER (6.5X24X2)	3	
50	67224-96L00	.ARM, BRAKE	1	
51	67238-96L00	.GEAR, SHIFT	1	
52	67284-94L10	.MARK, HANDLE LEVER	1	
53-1	36620-93J02	WIRE ASSY, REMOTE CONTROL	1	L:5000
53-2	36620-93J52	WIRE ASSY, REMOTE CONTROL	1	L:3500
53-3	36620-93J62	WIRE ASSY, REMOTE CONTROL	1	L:6500
54	09481-10501	.FUSE (10A)	1	

DF70A E01
DF70A E40
DF80A E01
DF80A E40
DF90A E01
DF90A E40
DF100B E01
DF100B E40

DF90A_E01_020_508A
OPT:REMOTE CONTROL

FIG.508B

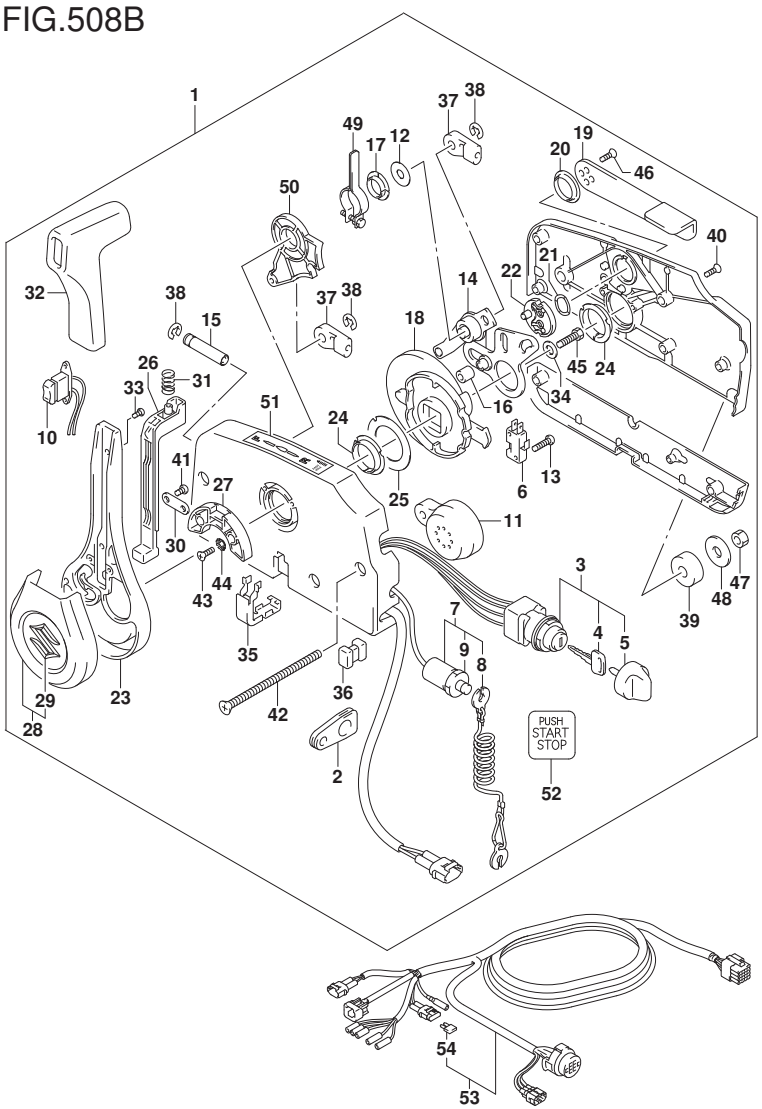

FIG.508B (2-B-15) OPT:REMOTE CONTROL (W/KEY LESS START)

REF NO.	PART NO.	DESCRIPTION	Q'TY	REMARKS
1	67200-96L11	REMOTE CONTROL ASSY	1	
2	36628-92E01	.GROMMET, WIRE HARNESS	1	
3	37110-96L10	.SWITCH ASSY, MAIN	1	
4-1	37141-99E00	..KEY (931)	2	
4-2	37141-99E10	..KEY (932)	2	
4-3	37141-99E20	..KEY (933)	2	
4-4	37141-99E30	..KEY (934)	2	
4-5	37141-99E40	..KEY (935)	2	
4-6	37141-99E50	..KEY (936)	2	
5	37143-96L00	..KNOB, MAIN SWITCH	1	
6	37721-93J91	.SWITCH, NEUTRAL	1	
7	37820-93J11	.SWITCH ASSY, EMERGENCY	1	
8	37823-92E02	..PLATE	1	
9	37826-92J10	..NUT	1	
10	37850-96L00	.SWITCH ASSY, PTT	1	
11	38500-93J90	.BUZZER	1	
12	67212-95600	.WASHER	1	
13	67296-92E11	.SCREW, NEUTRAL SW	2	
14	67220-95630	.PLATE ASSY	1	
15	67223-99E10	.KNOB, BRAKE ADJ	1	
16	67229-95600	.ROLLER	1	
17	67232-95600	.BUSH	1	
18	67238-87D00	.GEAR, DRIVE	1	
19	67241-99E11	.LEVER, FREE THROTTLE	1	
20	67243-95600	.BUSH	1	
21	67244-95600	.WASHER, WAVE	1	

DF90A_E01_020_508B
OPT:REMOTE CONTROL

FIG.508B

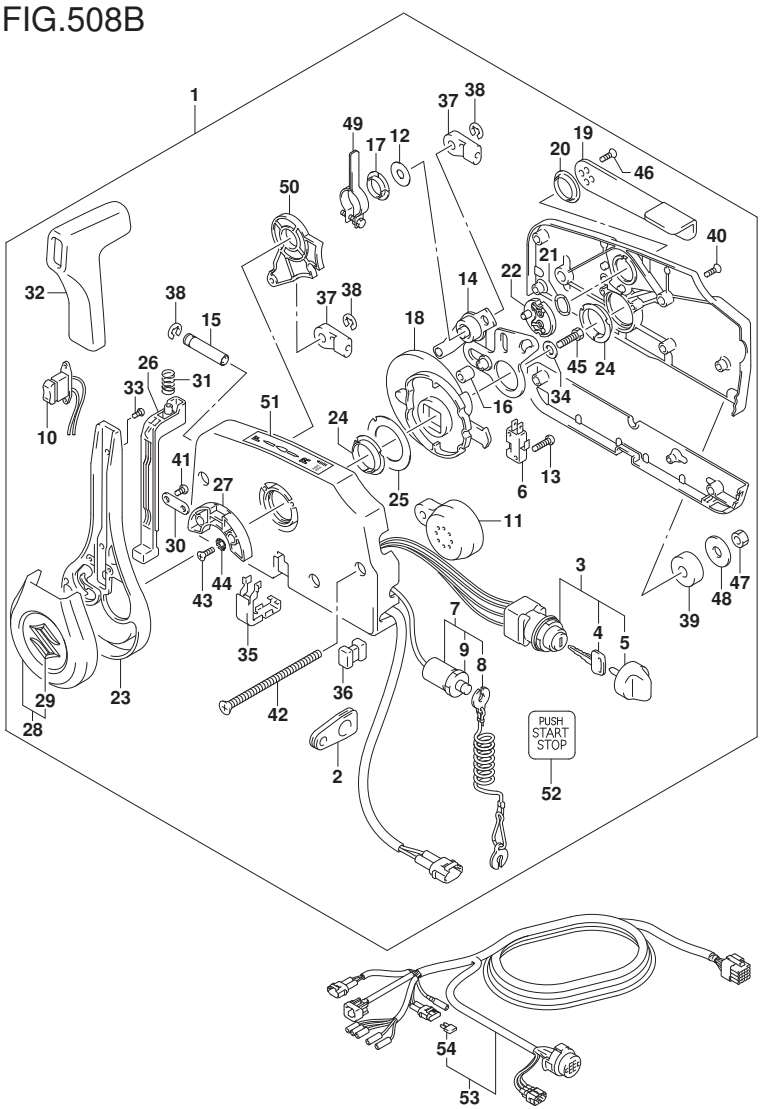

FIG.508B (2-C-2) OPT:REMOTE CONTROL (W/KEY LESS START)

REF NO.	PART NO.	DESCRIPTION	Q'TY	REMARKS
22	67245-95600	.DRUM, FREE THROTTLE	1	
23	67251-96L00	.LEVER, HANDLE	1	
24	67252-95600	.BUSH	2	
25	67253-95600	.WASHER	1	
26	67255-96L00	.ARM, LOCK	1	
27	67256-95600	.HOLDER, NEUT LOCK	1	
28	67257-96L00	.CAP, LEVER	1	
29	77811-54GB0-0PG	..EMBLEM, REAR MARK S (CHROME)	1	
30	67258-99E00	.BRACKET, LOCK ARM	1	
31	67259-87D00	.SPRING, NEUTRAL ARM	1	
32	67261-96L00	.GRIP	1	
33	67296-96L10	.SCREW	2	
34	67264-95600	.WASHER	1	
35	67267-96L00	.COVER, WIRE	1	
36	67273-95601	.SPACER	1	
37	67275-95600	.END, CABLE	2	
38	67292-94300	.E RING	3	
39	67294-95600	.SPACER	3	
40	67296-90J20	.SCREW	5	
41	67296-96L00	.SCREW	2	
42	67296-95630	.SCREW	3	
43	67296-95610	.SCREW	2	
44	67297-95600	.WASHER	2	
45	09100-08232	.BOLT (8X30)	1	
46	67269-96L10	.SCREW (5X12)	2	
47	09140-06020	.NUT	3	
48	67288-94320	.WASHER (6.5X24X2)	3	
49	67224-96L00	.ARM, BRAKE	1	

DF90A_E01_020_508B
OPT:REMOTE CONTROL

FIG.508B

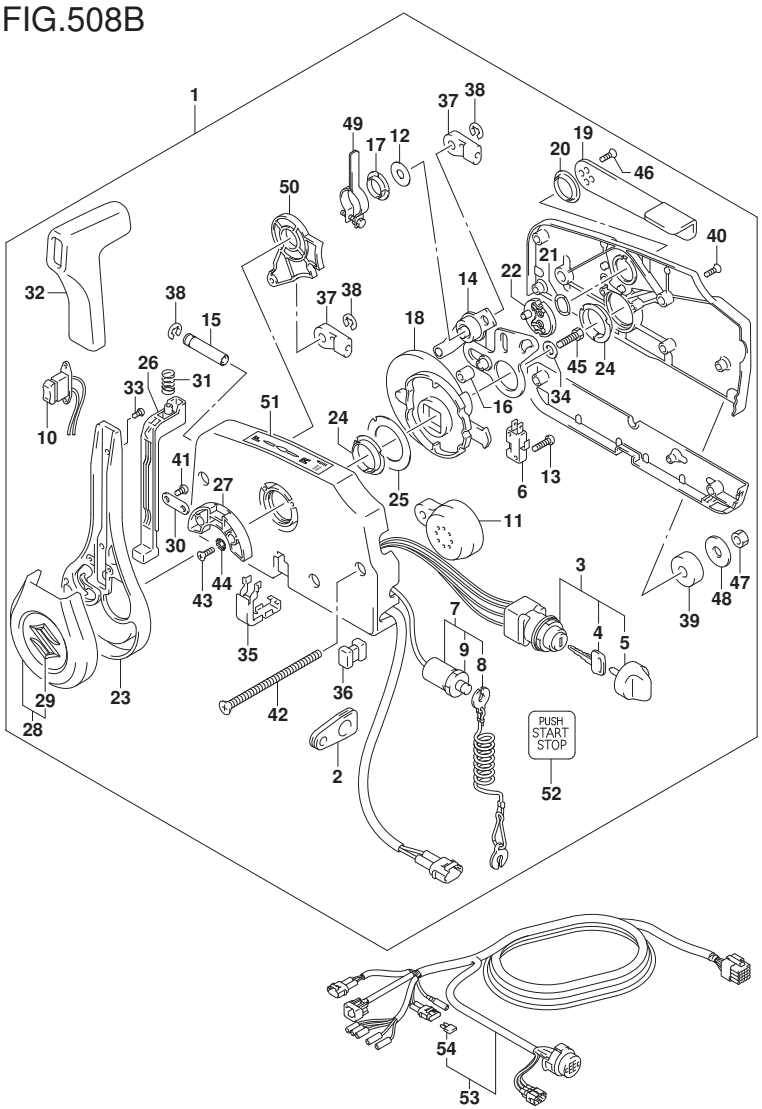

FIG.508B (2-C-3) OPT:REMOTE CONTROL (W/KEY LESS START)

REF NO.	PART NO.	DESCRIPTION	Q'TY	REMARKS
50	67238-96L00	.GEAR, SHIFT	1	
51	67284-94L10	.MARK, HANDLE LEVER	1	
52	67285-96L00	.MARK, KLS MAIN SW	1	
53-1	36620-93J02	WIRE ASSY, REMOTE CONTROL	1	L:5000
53-2	36620-93J52	WIRE ASSY, REMOTE CONTROL	1	L:3500
53-3	36620-93J62	WIRE ASSY, REMOTE CONTROL	1	L:6500
54	09481-10501	.FUSE (10A)	1	

DF70A E01
DF80A E01
DF90A E01
DF100B E01

DF90A_E01_020_508B
OPT:REMOTE CONTROL

FIG.517A

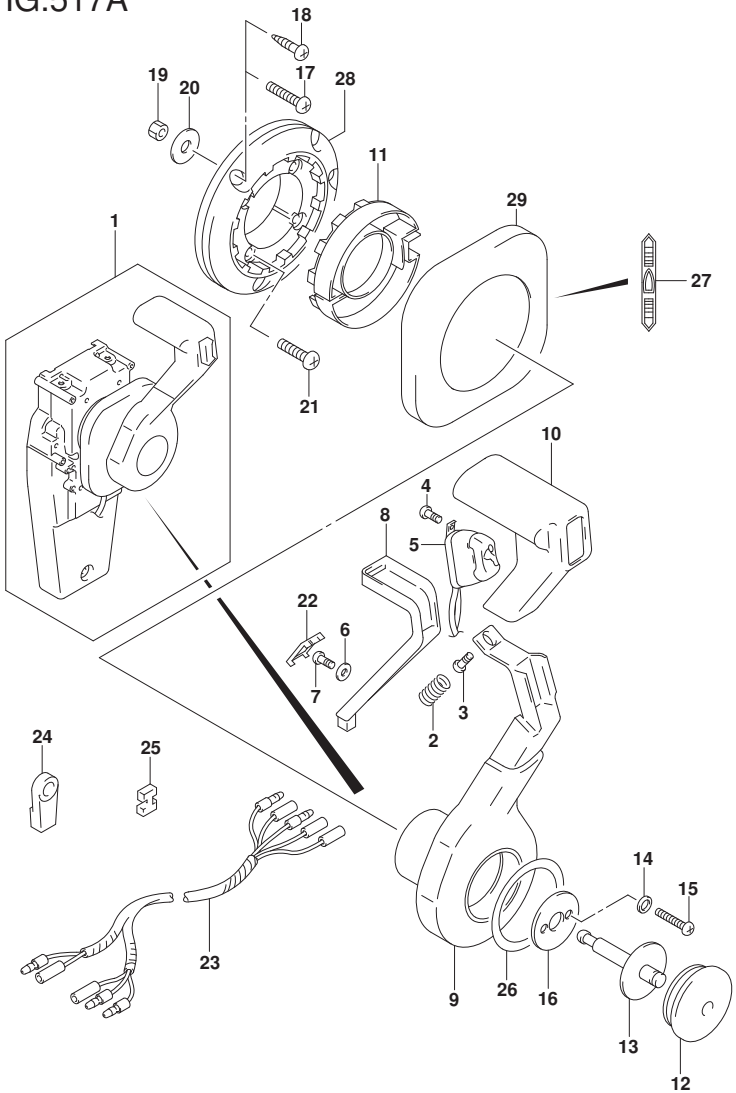

FIG.517A (2-C-4) OPT:CONCEALED REMOCON (1) (DF70A)(DF80A)(DF90A)(DF100B)

REF NO.	PART NO.	DESCRIPTION	Q'TY	REMARKS
1	67200-93J34	REMOTE CONTROL ASSY	1	
2	67298-92E50	.SPRING	1	
3	67296-94310	.SCREW	1	
4	67295-92E10	.SCREW (3X12)	2	
5	37850-92E27	.SWITCH ASSY, PTT	1	
6	67288-92E60	.WASHER	1	
7	09125-04021	.SCREW (4X20)	1	
8	67255-92E50	.ARM, NEUTRAL LOCK	1	
9	67251-92E50	.LEVER	1	
10	67261-92E50	.GRIP	1	
11	67256-92E50	.HOLDER, NEUTRAL LOCK	1	
12	67257-92E00	.CAP, LEVER	1	
13	67242-92E50	.SHAFT, FREE ACC	1	
14	67288-92E20	.WASHER	6	
15	67296-88D10	.SCREW (5X16)	4	
16	67288-92E70	.WASHER	1	
17	67296-88D20	.SCREW (6X35)	3	
18	67295-92E50	.SCREW (6X30)	3	
19	67287-92E50	.NUT	3	
20	09160-06104	.WASHER (6.5X24X2)	3	
21	67296-88D30	.SCREW (5X30)	4	
22	67254-92E50	.COVER, LOCK ARM	1	
23	36890-93J00	.WIRING ASSY	1	

DF90A_E01_020_517A
OPT:CONCEALED REMOCON (1)

FIG.517A

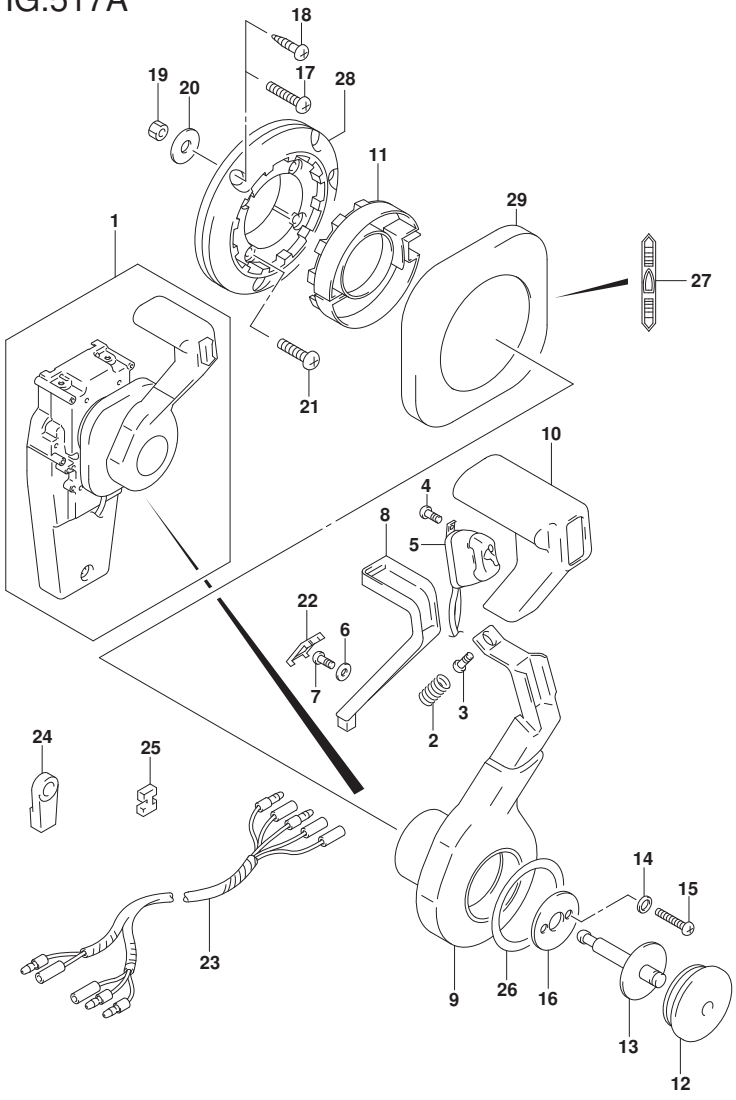

FIG.517A (2-C-5) OPT:CONCEALED REMOCON (1) (DF70A)(DF80A)(DF90A)(DF100B)

REF NO.	PART NO.	DESCRIPTION	Q'TY	REMARKS
24	67275-95600	.ENG CABLE	2	
25	67273-95601	.SPACER	1	
26	67283-92E50	.DECAL, LEVER	1	
27	67284-92E50	.DECAL, CLUTCH	1	
28	67274-92E50	.BASE	1	
29	67211-92E50	.COVER	1	

DF70A E01
DF70A E40
DF80A E01
DF80A E40
DF90A E01
DF90A E40
DF100B E01
DF100B E40

DF90A_E01_020_517A
OPT:CONCEALED REMOCON (1)

FIG.518A

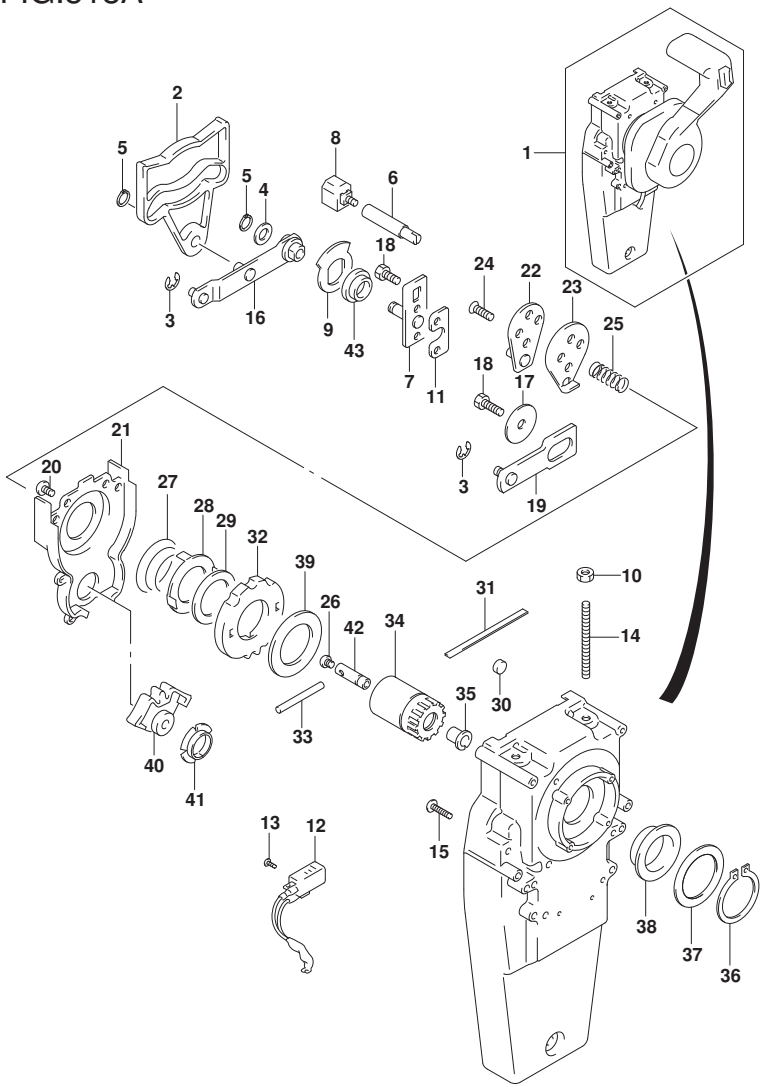

FIG.518A (2-C-6) OPT:CONCEALED REMOCON (2) (DF70A)(DF80A)(DF90A)(DF100B)

REF NO.	PART NO.	DESCRIPTION	Q'TY	REMARKS
1	67200-93J34	REMOTE CONTROL ASSY	1	
2	67222-92E50	.DUEL PLATE	1	
3	67292-94300	.E RING	3	
4	67288-92E10	.WASHER	1	
5	67291-92E00	.SNAP RING	2	
6	67223-92E50	.BRAKE ADJUST	1	
7	67221-92E50	.HOLDER ASSY	1	
8	67224-92E50	.BRAKE SHOE ASSY	1	
9	67225-92E50	.DISK, BRAKE	1	
10	09140-06020	.NUT	2	
11	67294-92E00	.SPACER	1	
12	37721-95500	.SWITCH ASSY, NEUTRAL	1	
13	67296-92E11	.SCREW (3X15)	2	
14	67226-92E10	.BOLT, STOPPER (REAR)	2	
15	67296-92E20	.SCREW (5X25)	2	
16	67240-92E50	.ARM ASSY, THROTTLE	1	
17	67228-92E00	.WASHER	1	
18	67286-92E00	.BOLT (6X18)	3	
19	67230-92E00	.ARM ASSY, SHIFT	1	
20	09125-05042	.SCREW (5X10)	11	
21	67234-92E00	.GEAR CASE	1	
22	67245-92E00	.LEVER ASSY, THROTTLE	1	
23	67227-92E00	.STOPPER	1	

DF90A_E01_020_518A
OPT:CONCEALED REMOCON (2)

FIG.518A

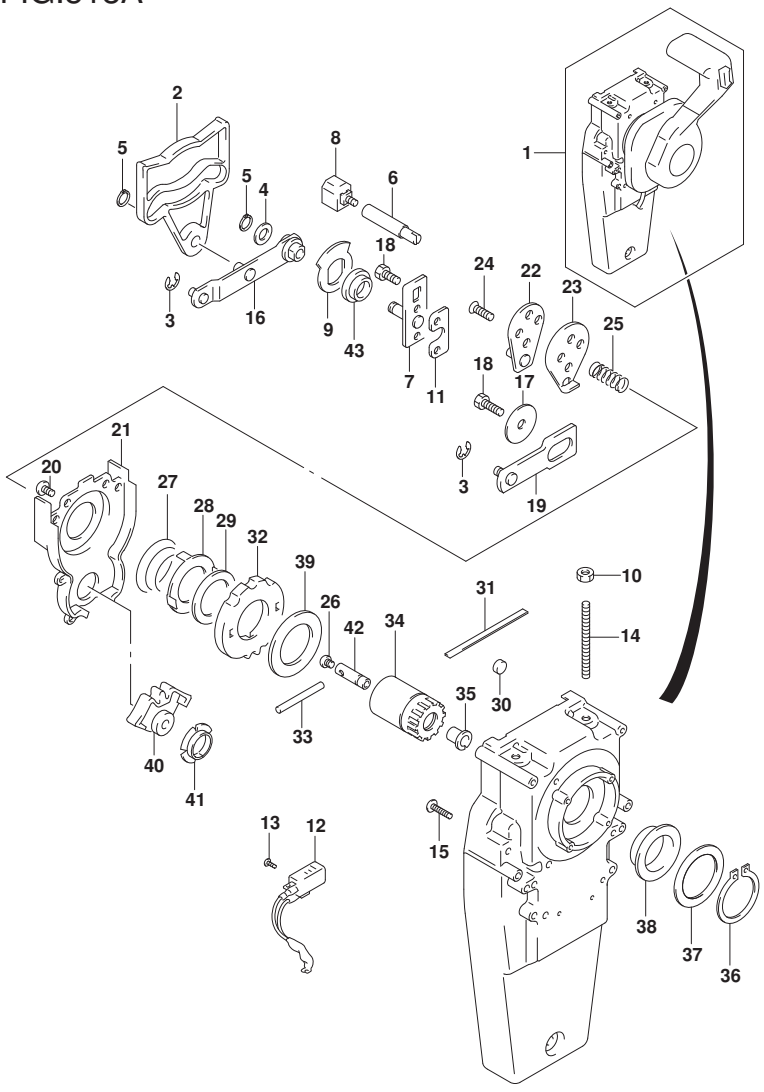

FIG.518A (2-C-7) OPT:CONCEALED REMOCON (2) (DF70A)(DF80A)(DF90A)(DF100B)

REF NO.	PART NO.	DESCRIPTION	Q'TY	REMARKS
24	67296-88D10	.SCREW (5X16)	2	
25	67225-92E00	.SPRING	1	
26	09125-04004	.SCREW (4X6)	1	
27	67233-92E00	.SPRING	1	
28	67235-92E00	.PLATE, SHIFT LOCK	1	
29	67239-92E10	.PLATE, SHIFT PIN	1	
30	67236-92E00	.ROLLER	1	
31	67237-92E01	.SPRING	5	
32	67238-92E50	.GEAR, DRIVE	1	
33	67239-92E00	.PIN	1	
34	67246-92E50	.SHAFT, DRIVE	1	
35	67252-92E00	.BUSH	1	
36	67291-92E10	.SNAP RING	1	
37	67253-92E10	.WASHER	1	
38	67252-92E10	.BUSH	1	
39	67253-95600	.WASHER	1	
40	67231-92E00	.GEAR, SHIFT	1	
41	67232-95600	.BUSH	1	
42	67241-92E50	.ROD, FREE ACC	1	
43	67232-92E50	.BUSH	1	

DF70A E01
DF70A E40
DF80A E01
DF80A E40
DF90A E01
DF90A E40
DF100B E01
DF100B E40

DF90A_E01_020_518A
OPT:CONCEALED REMOCON (2)

FIG.519A

FIG.519A (2-C-8) OPT:REMOTE CONTROL SPACER (DF70A)(DF70ATH)(DF80A)(DF90A)(

REF NO.	PART NO.	DESCRIPTION	Q'TY	REMARKS
1	67500-88L00	KIT, R/CON SPACER SINGLE	1	
2	09125-05135	.SCREW (5X65)	4	
3	09160-05029	.WASHER (5.5X12X0.8)	4	
4	09140-05005	.NUT	4	
5	67273-88L00	.GROMMET, R/CON SINGLE	1	

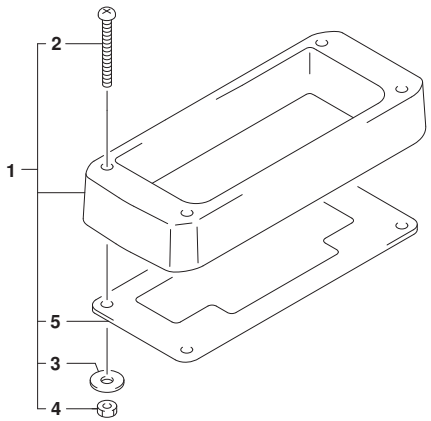

DF70A E01
DF70A E40
DF70ATH E01
DF70ATH E40
DF80A E01
DF80A E40
DF90A E01
DF90A E40
DF90ATH E01
DF90ATH E40

DF90A_E01_020_519A
OPT:REMOTE CONTROL SPACER

FIG.519B

FIG.519B (2-C-9) OPT:REMOTE CONTROL SPACER (DF100B)

REF NO.	PART NO.	DESCRIPTION	Q'TY	REMARKS
1	67500-88L00	KIT, R/CON SPACER SINGLE	1	
2	09125-05135	.SCREW (5X65)	4	
3	09160-05029	.WASHER (5.5X12X0.8)	4	
4	09140-05005	.NUT	4	
5	67273-88L00	.GROMMET, R/CON SINGLE	1	

DF100B E01
DF100B E40

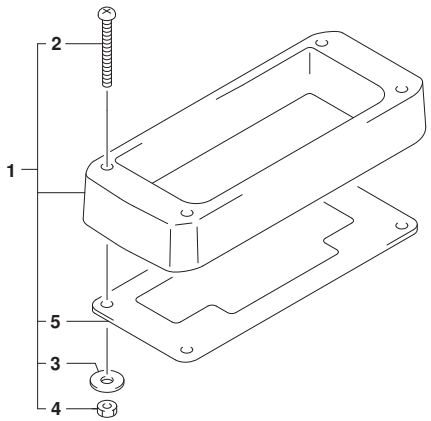

DF90A_E01_020_519B
OPT:REMOTE CONTROL SPACER

FIG.521A

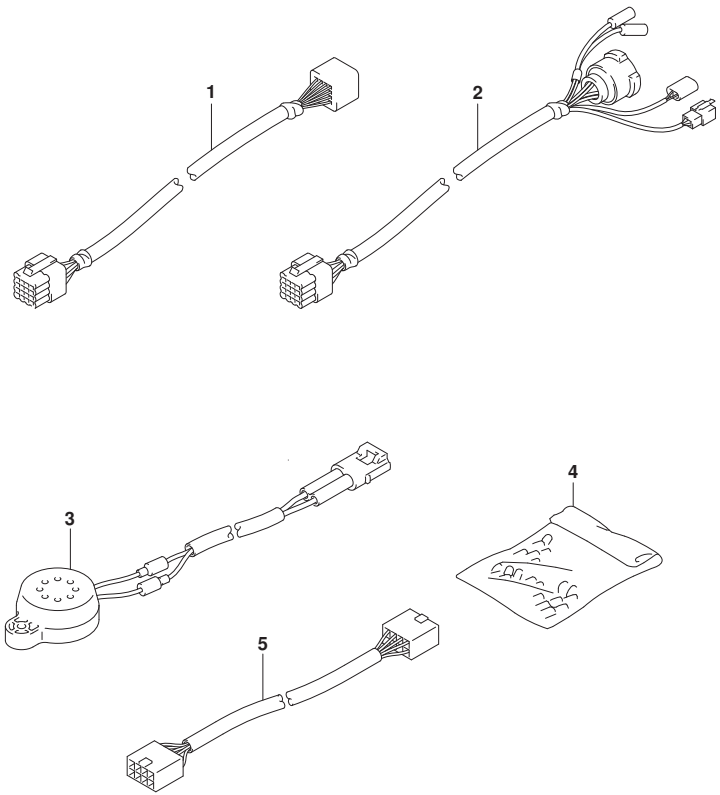

FIG.521A (2-C-10) OPT:HARNESS (DF70A)(DF80A)(DF90A)(DF100B)

REF NO.	PART NO.	DESCRIPTION	Q'TY	REMARKS
1-1	36620-93J10	WIRE ASSY, REMOCON EXTENSION	1	L:2000
1-2	36620-93J40	WIRE ASSY, REMOCON EXTENSION	1	L:3000
2	36620-93J30	WIRE ASSY, REMOCON ADAPTER	1	L:2000
3	38500-93J00	BUZZER ASSY, WARNING	1	
4	36990-87D00	TERMINAL & SLEEVE SET	1	
5	36667-96L20	WIRE, GAUGE EXT	1	

DF70A E01
DF70A E40
DF80A E01
DF80A E40
DF90A E01
DF90A E40
DF100B E01
DF100B E40

FIG.521B

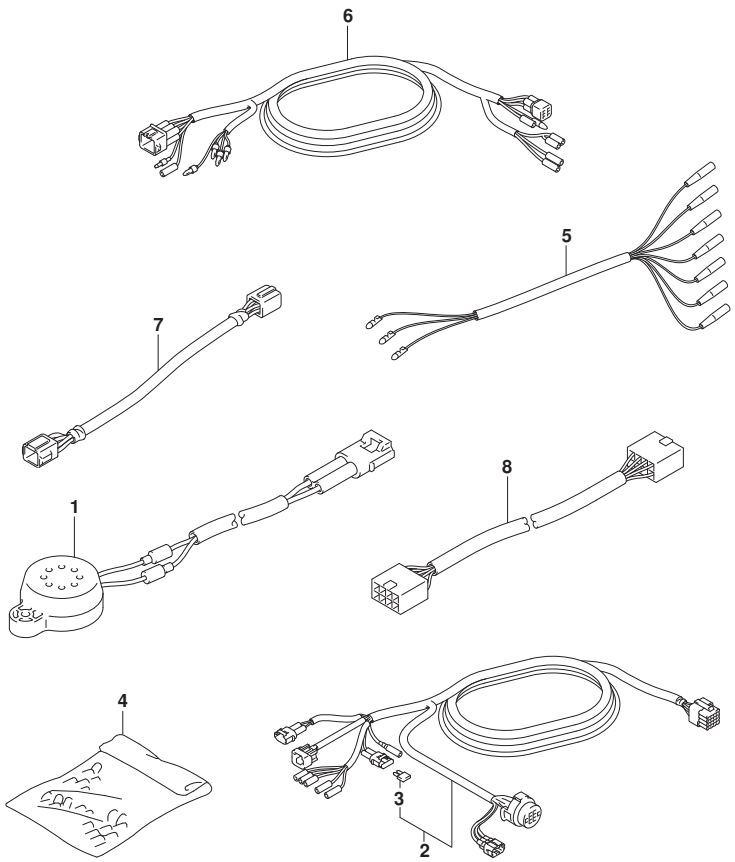

FIG.521B (2-C-11) OPT:HARNESS (DF70ATH)(DF90ATH)

REF NO.	PART NO.	DESCRIPTION	Q'TY	REMARKS
1	38500-93J00	BUZZER ASSY, WARNING	1	
2-1	36620-93J02	WIRE ASSY, REMOTE CONTROL	1	L:5000
2-2	36620-93J52	WIRE ASSY, REMOTE CONTROL	1	L:3500
2-3	36620-93J62	WIRE ASSY, REMOTE CONTROL	1	L:6500
3	09481-10501	.FUSE (10A)	1	
4	36990-87D00	TERMINAL & SLEEVE SET	1	
5	36630-92E00	WIRE ASSY, INSTRUMENT	1	
6	36660-94480	WIRE, MONITOR GAUGE EXTENSION	1	
7	36682-92E00	WIRE, MONITOR GAUGE EXTENSION	1	
8	36667-96L20	WIRE, GAUGE EXT	1	

DF70ATH E01
DF70ATH E40
DF90ATH E01
DF90ATH E40

FIG.530A

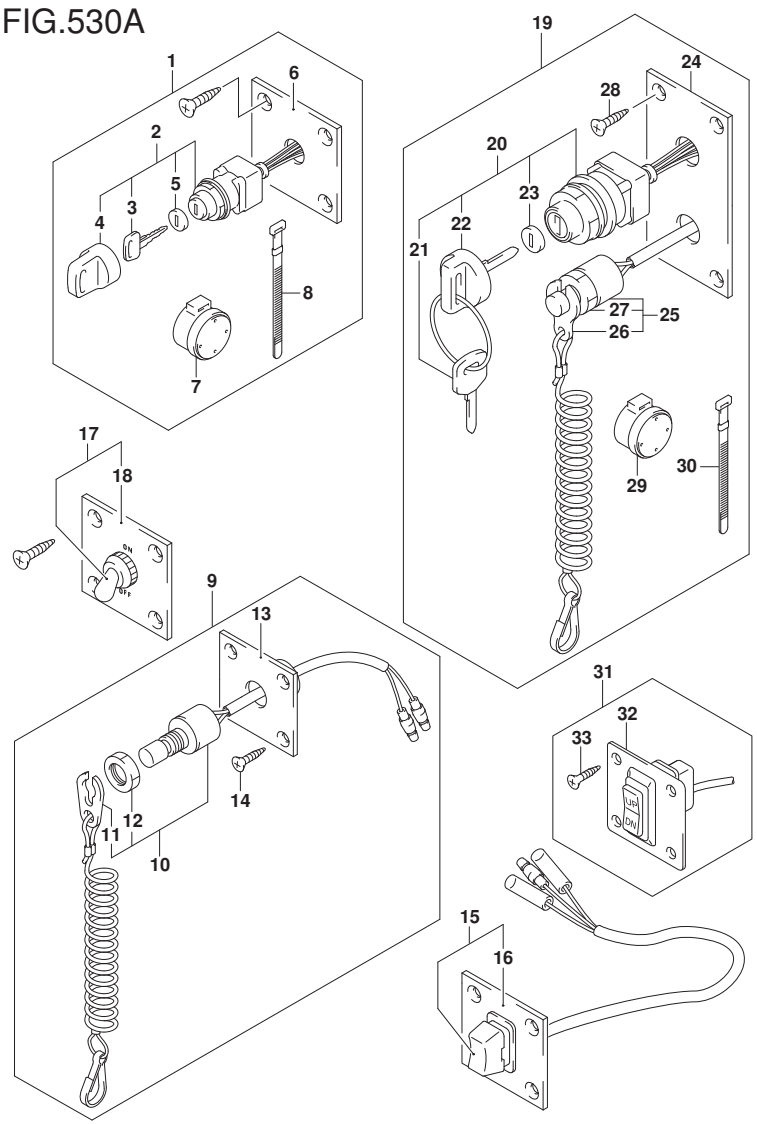

FIG.530A (2-C-12) OPT:SWITCH (DF70A)(DF80A)(DF90A)(DF100B)

REF NO.	PART NO.	DESCRIPTION	Q'TY	REMARKS
1	37100-96J01	PANEL ASSY, IGNITION SW	1	
2	37110-93J02	.SWITCH ASSY, IGNITION	1	
3-1	37141-99E00	..KEY (931)	2	
3-2	37141-99E10	..KEY (932)	2	
3-3	37141-99E20	..KEY (933)	2	
3-4	37141-99E30	..KEY (934)	2	
3-5	37141-99E40	..KEY (935)	2	
3-6	37141-99E50	..KEY (936)	2	
3-7	37141-99E60	..KEY (937)	2	
3-8	37141-99E70	..KEY (938)	2	
3-9	37141-99E80	..KEY (939)	2	
3-10	37141-99E90	..KEY (940)	2	
3-11	37141-99EA0	..KEY (941)	2	
3-12	37141-99EB0	..KEY (942)	2	
4	37143-99E01	..CAP, KEY	1	
5	37149-93J00	..CAP, CYLINDER BODY	1	
6	37139-99E00	.PANEL, IGNITION SW	1	
7	38500-93J90	.BUZZER ASSY, WARNING	1	
8	09407-08401	.CLAMP (L:80)	1	
9	37803-93J06	PANEL ASSY, EMERGENCY SW	1	
10	37820-93J11	.SWITCH ASSY, EMERGENCY	1	
11	37823-92E02	..PLATE, LOCK	1	
12	37826-92J10	..NUT	1	

DF90A_E01_020_530A
OPT:SWITCH

FIG.530A

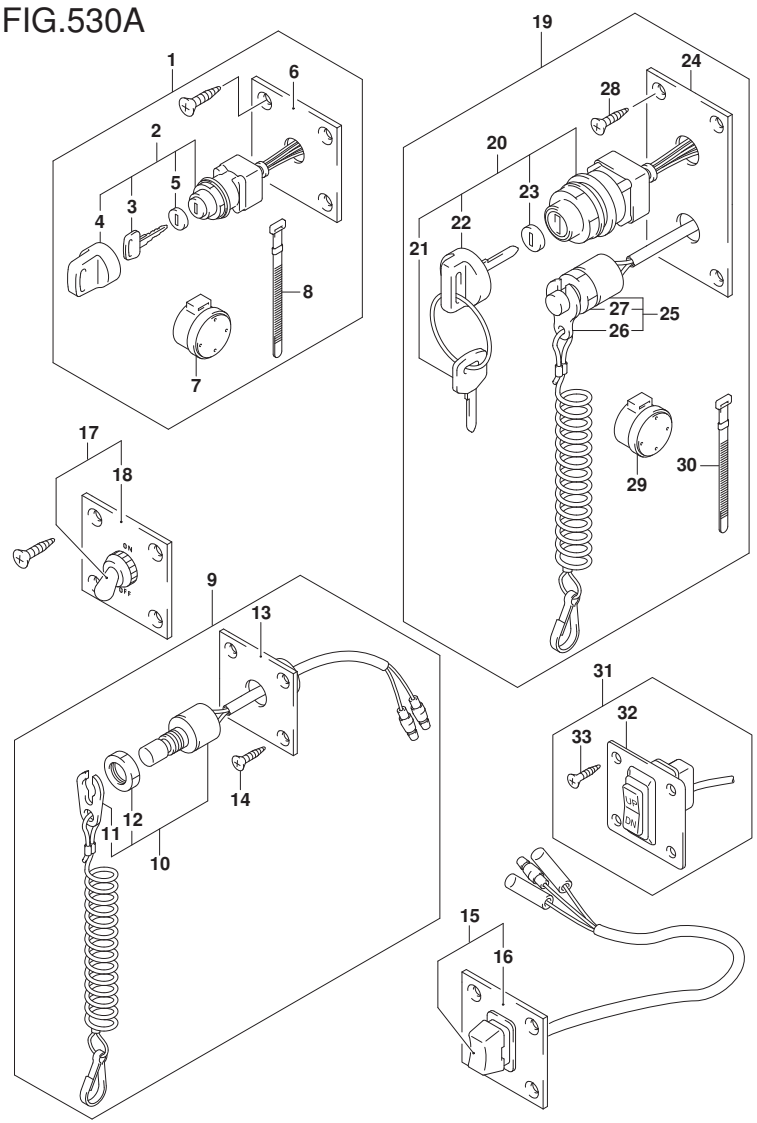

FIG.530A (2-C-13) OPT:SWITCH (DF70A)(DF80A)(DF90A)(DF100B)

REF NO.	PART NO.	DESCRIPTION	Q'TY	REMARKS
13	37825-99E10	.PANEL, EMERGENCY SW	1	
14	03122-05165	.SCREW	4	
15	37805-93J00	PANEL ASSY, PTT SW	1	
16	37855-99E00	.PANEL, PTT SW	1	
17	37210-93J00	PANEL ASSY, LIGHTING SW	1	
18	37212-93J00	.PANEL, LIGHTING SW	1	
19	37100-96J27	PANEL ASSY, ENGINE SW	1	
20	37110-93J02	.SWITCH ASSY, IGNITION	1	
21-1	37141-99E00	..KEY (931)	2	
21-2	37141-99E10	..KEY (932)	2	
21-3	37141-99E20	..KEY (933)	2	
21-4	37141-99E30	..KEY (934)	2	
21-5	37141-99E40	..KEY (935)	2	
21-6	37141-99E50	..KEY (936)	2	
21-7	37141-99E60	..KEY (937)	2	
21-8	37141-99E70	..KEY (938)	2	
21-9	37141-99E80	..KEY (939)	2	
21-10	37141-99E90	..KEY (940)	2	
21-11	37141-99EA0	..KEY (941)	2	
21-12	37141-99EB0	..KEY (942)	2	
22	37143-99E01	..CAP, KEY	1	
23	37149-93J00	..CAP, CYLINDER BODY	1	

DF90A_E01_020_530A
OPT:SWITCH

FIG.530A

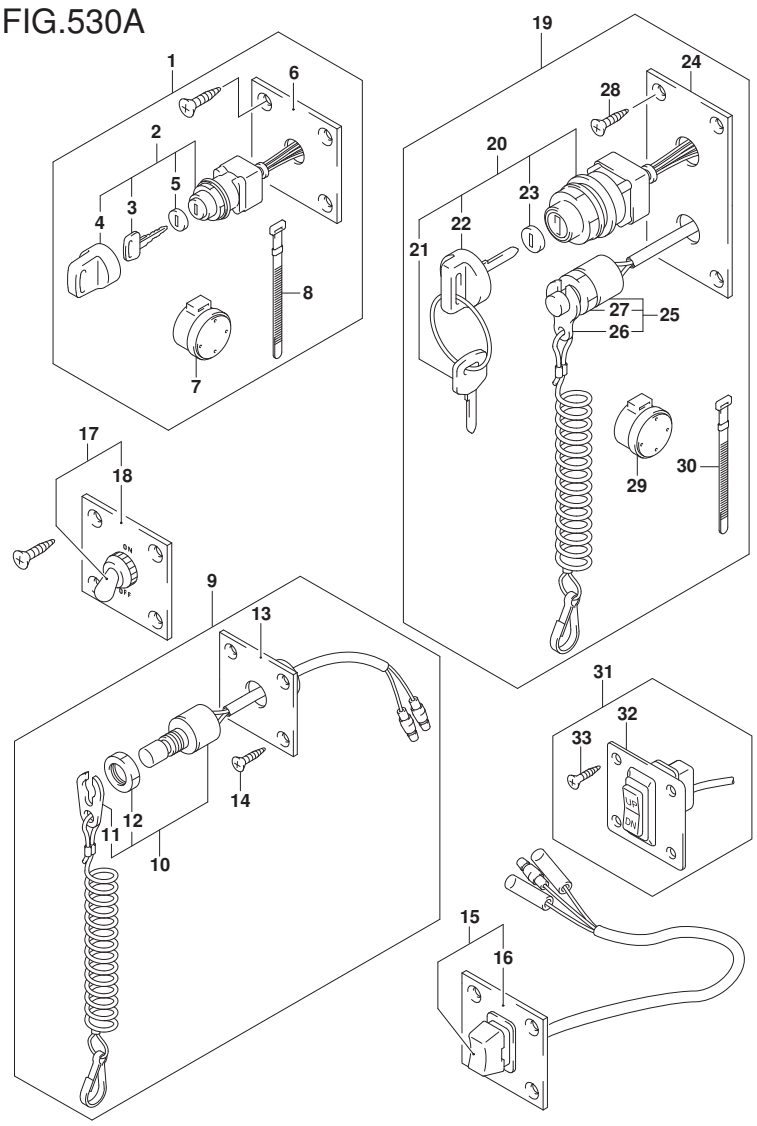

FIG.530A (2-C-14) OPT:SWITCH (DF70A)(DF80A)(DF90A)(DF100B)

REF NO.	PART NO.	DESCRIPTION	Q'TY	REMARKS
24	37139-99E40	.PANEL, IGNITION SWITCH	1	
25	37820-93J11	.SWITCH ASSY, EMERGENCY	1	
26	37823-92E02	..PLATE ASSY, EMERGENCY	1	
27	37826-92J10	..NUT	1	
28	03121-0516A	.SCREW	4	
29	38500-93J90	.BUZZER ASSY, WARNING	1	
30	09407-08401	.CLAMP (L:80)	1	
31	37860-87L00	PANEL ASSY, TROLLING CONTROL	1	
32	37862-87L00	.PANEL	1	
33	09131-05004	.SCREW (5X16)	4	

DF70A E01
DF70A E40
DF80A E01
DF80A E40
DF90A E01
DF90A E40
DF100B E01
DF100B E40

DF90A_E01_020_530A
OPT:SWITCH

FIG.535A

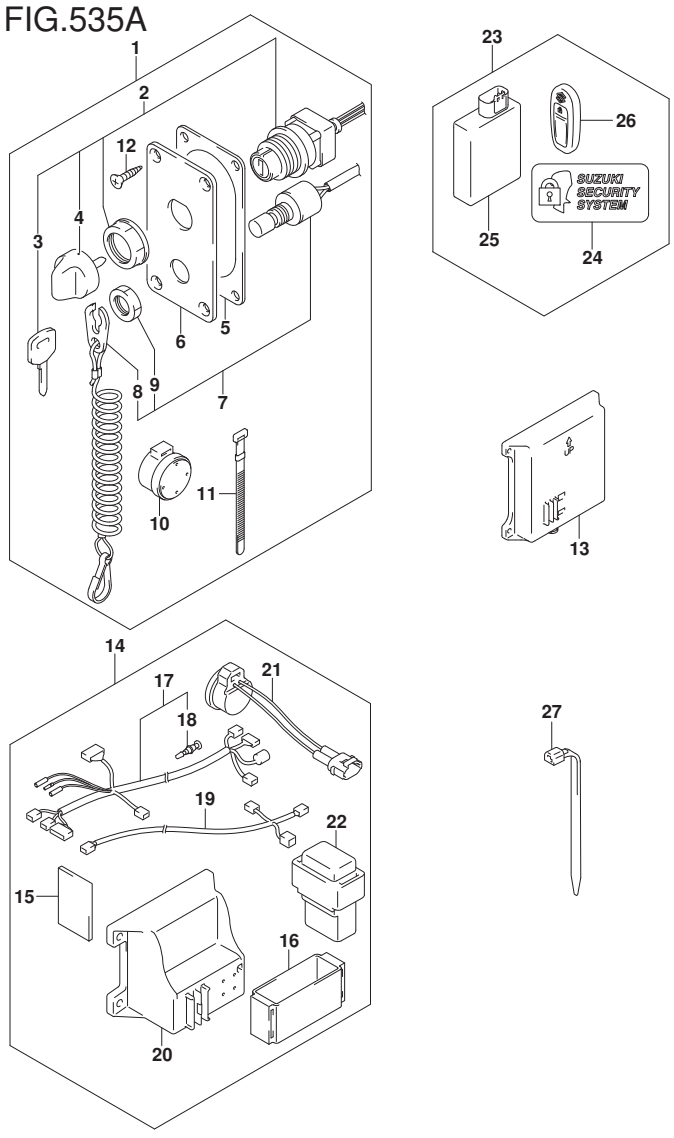

DF90A_E01_020_535A
OPT:KEY LESS START

FIG.535A (2-C-15) OPT:KEY LESS START (DF70A E01)(DF80A E01)(DF90A E01)(DF100B

REF NO.	PART NO.	DESCRIPTION	Q'TY	REMARKS
1	37100-96L12	PANEL ASSY, MAIN SWITCH KLS	1	
2	37110-96L10	.SWITCH ASSY, MAIN	1	
3-1	37141-99E00	..KEY (931)	1	
3-2	37141-99E10	..KEY (932)	1	
3-3	37141-99E20	..KEY (933)	1	
3-4	37141-99E30	..KEY (934)	1	
3-5	37141-99E40	..KEY (935)	1	
3-6	37141-99E50	..KEY (936)	1	
4	37143-96L00	..KNOB, MAIN SWITCH	1	
5	37114-96L10	.SHEET, MAIN SWITCH PANEL	1	
6	37139-96L40	.PANEL, MAIN SWITCH	1	
7	37820-93J11	.SWITCH ASSY, EMERGENCY	1	
8	37823-92E02	..PLATE ASSY, EMERGENCY SW LOCK	1	
9	37826-92J10	..NUT	1	
10	38500-93J90	.BUZZER, WARNING	1	
11	09407-08401	.CLAMP (L:80)	1	
12	03122-05165	.SCREW	4	
13	37173-96L00	HOLDER, KLS PARTS	1	LARGE TYPE
14	37105-96L11	HARNESS SET, KLS CONTROLLER	1	
15	32851-93J00	.CUSHION, LEAD WIRE	1	
16	32980-38F00	.HOLDER, KLS CONT	1	
17	36623-96L10	.HARNESS ASSY, KLS CONT	1	
18	36615-96300	..TERMINAL, RESIN	1	

FIG.535A

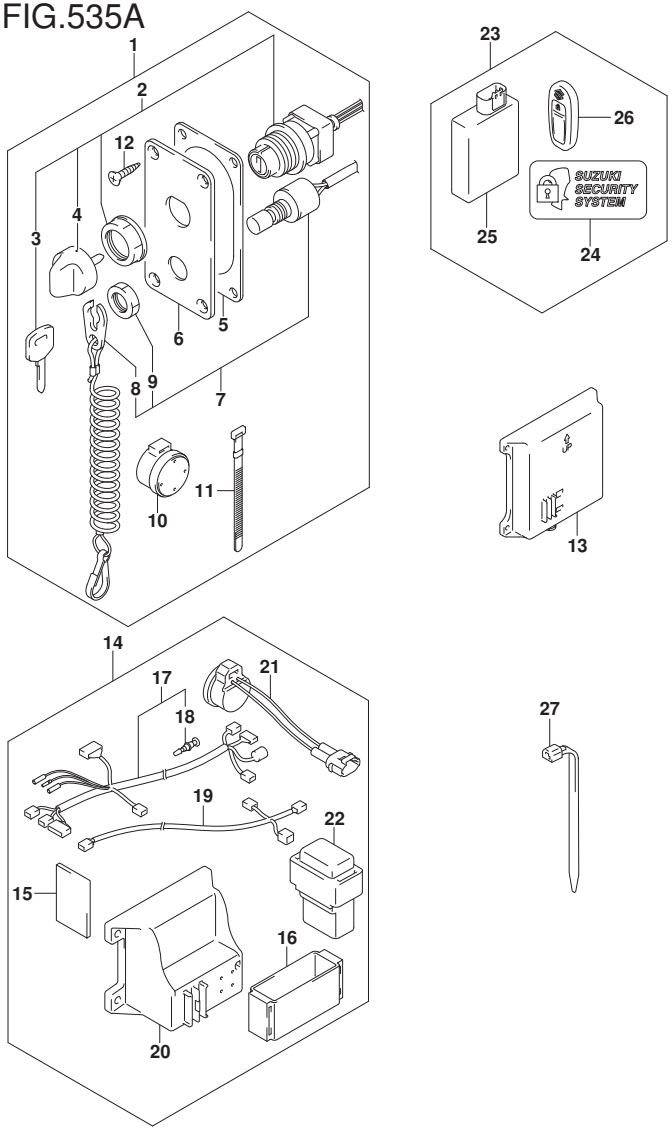

FIG.535A (2-D-2) OPT:KEY LESS START (DF70A E01)(DF80A E01)(DF90A E01)(DF100B E

REF NO.	PART NO.	DESCRIPTION	Q'TY	REMARKS
19	36662-96L10	.HARNESS ASSY, KLS CAN	1	L:6500+2000
20	37173-96L10	.HOLDER, KLS PARTS	1	SMALL TYPE
21	38500-93J90	.BUZZER ASSY, KLS	1	
22	38860-96L01	.RELAY ASSY, KLS	1	
23	37170-96L04	CONTROLLER SET, KLS 433MHZ	1	
24	37117-96L00	.DECAL, KLS	2	
25	37171-96L02	.CONTROLLER ASSY, KLS 433MHZ	1	
26	37172-96L01	.REMOCON ASSY, KLS 433MHZ	2	
27	09407-14407	CLAMP (L:145)	1	

DF70A E01
DF80A E01
DF90A E01
DF100B E01

DF90A_E01_020_535A
OPT:KEY LESS START

FIG.544A

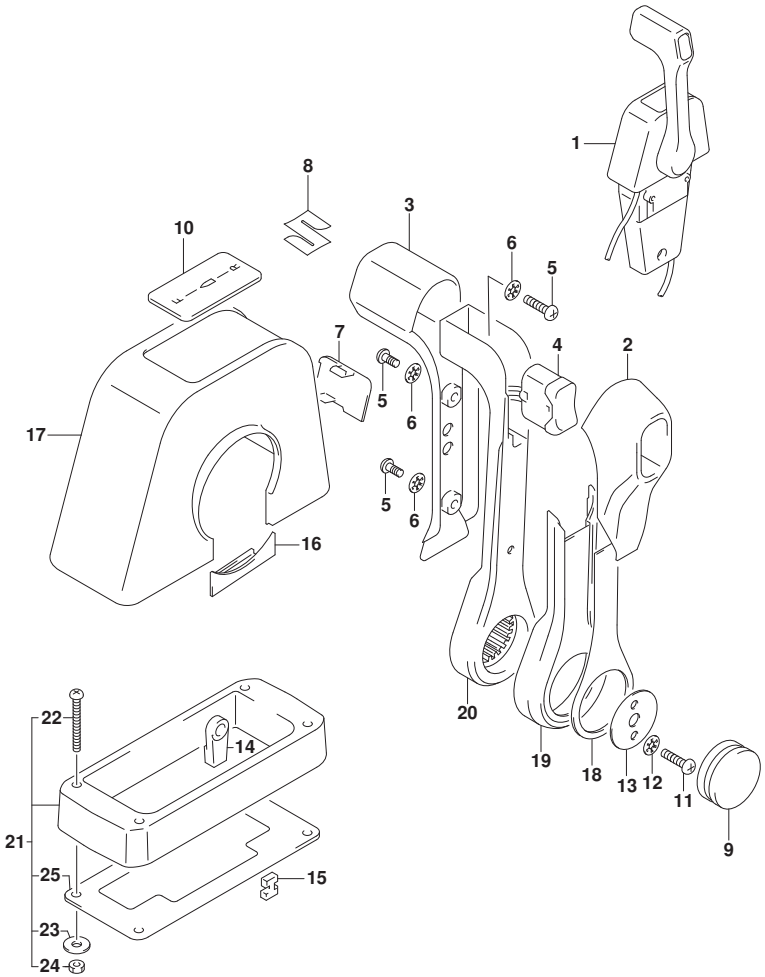

FIG.544A (2-D-3) OPT:REMOTE CONTROL ASSY SINGLE (1) (DF70A)(DF80A)(DF90A)(DI

REF NO.	PART NO.	DESCRIPTION	Q'TY	REMARKS
1	67200-88L01	REMOTE CONTROL ASSY, SINGLE	1	
2	67261-88L10	.GRIP, REMOCON NO.2	1	
3	67261-88L00	.GRIP, REMOCON NO.1	1	
4	37850-88L00	.SWITCH ASSY, PTT	1	
5	67296-88L00	.SCREW	3	
6	67288-92E20	.WASHER	3	
7	67212-88L00	.COVER, PLUG (SINGLE)	1	
8	68111-88L00	.EMBLEM, MARK (S)	1	
9	67257-88L00	.CAP, LEVER	1	
10	67281-88L00	.DECAL (SINGLE)	1	
11	67296-92E60	.SCREW	2	
12	67288-92E60	.WASHER	2	
13	67253-92E00	.WASHER	1	
14	67275-95600	.END, CABLE	2	
15	67273-95601	.SPACER	1	
16	67271-88L10	.COVER, REMOCON LEVER LOWER	1	
17	67211-88L00	.COVER (SINGLE)	1	
18	67264-88L00	.COVER, LEVER DESIGN	1	
19	67264-88L10	.COVER, LEVER PLATING	1	
20	67251-88L00	.LEVER, HANDLE	1	
21	67500-88L00	KIT, REMOCON SPACER SINGLE	1	
22	09125-05135	.SCREW (5X65)	4	
23	09160-05029	.WASHER (5.5X12X0.8)	4	
24	09140-05005	.NUT	4	
25	67273-88L00	.GROMMET, REMOCON (SINGLE)	1	

DF70A E01
DF70A E40
DF80A E01
DF80A E40
DF90A E01
DF90A E40
DF100B E01
DF100B E40

DF90A_E01_020_544A
OPT:REMOTE CONTROL ASSY SINGLE (1)

FIG.545A

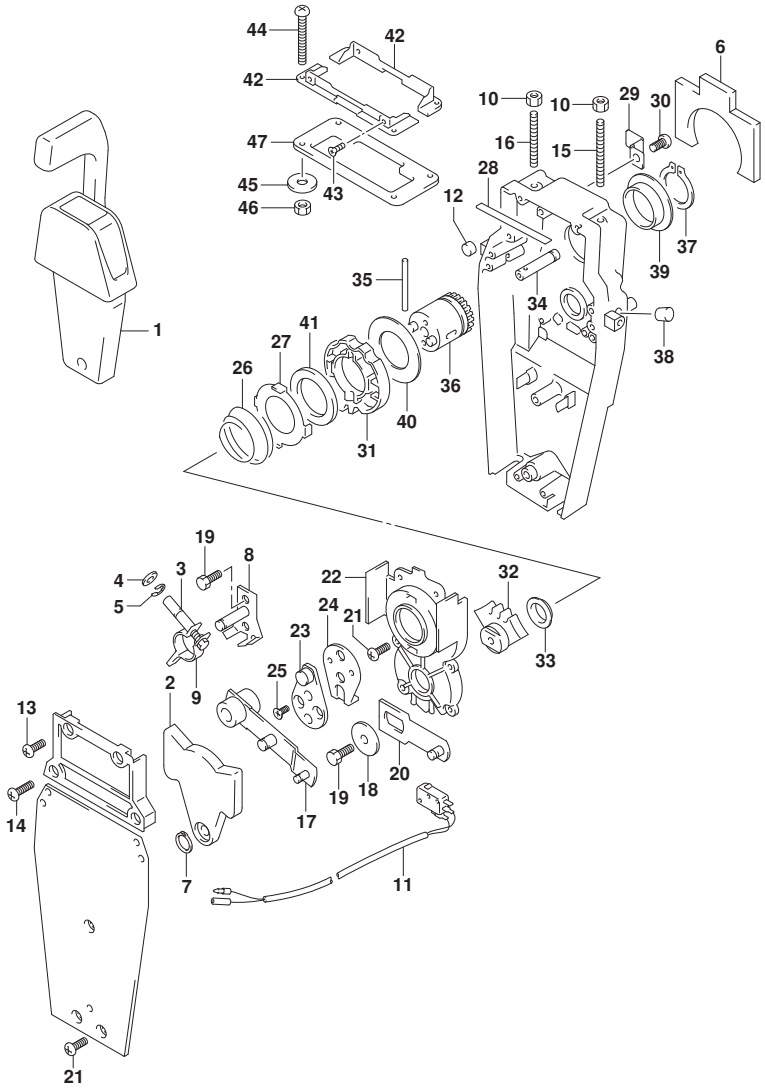

DF90A_E01_020_545A
OPT:REMOTE CONTROL ASSY SINGLE (2)

FIG.545A (2-D-4) OPT:REMOTE CONTROL ASSY SINGLE (2) (DF70A)(DF80A)(DF90A)(DI

REF NO.	PART NO.	DESCRIPTION	Q'TY	REMARKS
1	67200-88L01	REMOTE CONTROL ASSY	1	
2	67222-92E00	.DUAL PLATE	1	
3	67223-92E00	.BRAKE ADJUST	1	
4	67288-92E00	.WASHER	1	
5	67292-94300	.E RING	4	
6	67272-88L00	.GOM SEAL, WATERPROOF	1	
7	67291-92E00	.SNAP RING	1	
8	67221-92E00	.SHIFT ASSY	1	
9	67224-92E00	.BRAKE ARM ASSY	1	
10	09140-06020	.NUT	2	
11	37721-88L01	.SWITCH ASSY, NEUTRAL	1	
12	67236-92E00	.ROLLER	1	
13	67296-88D10	.SCREW (5X16)	2	
14	67296-92E20	.SCREW	2	
15	67226-92E00	.BOLT, STOPPER FRONT	1	
16	67226-92E10	.BOLT, STOPPER REAR	1	
17	67240-92E00	.ARM ASSY, THROTTLE	1	
18	67228-92E00	.WASHER	1	
19	67286-92E00	.BOLT	3	
20	67230-88L00	.ARM ASSY, SHIFT	1	
21	09125-05042	.SCREW (5X10)	10	
22	67234-88L00	.CASE, GEAR	1	
23	67245-92E00	.LEVER ASSY, THROTTLE	1	

FIG.545A

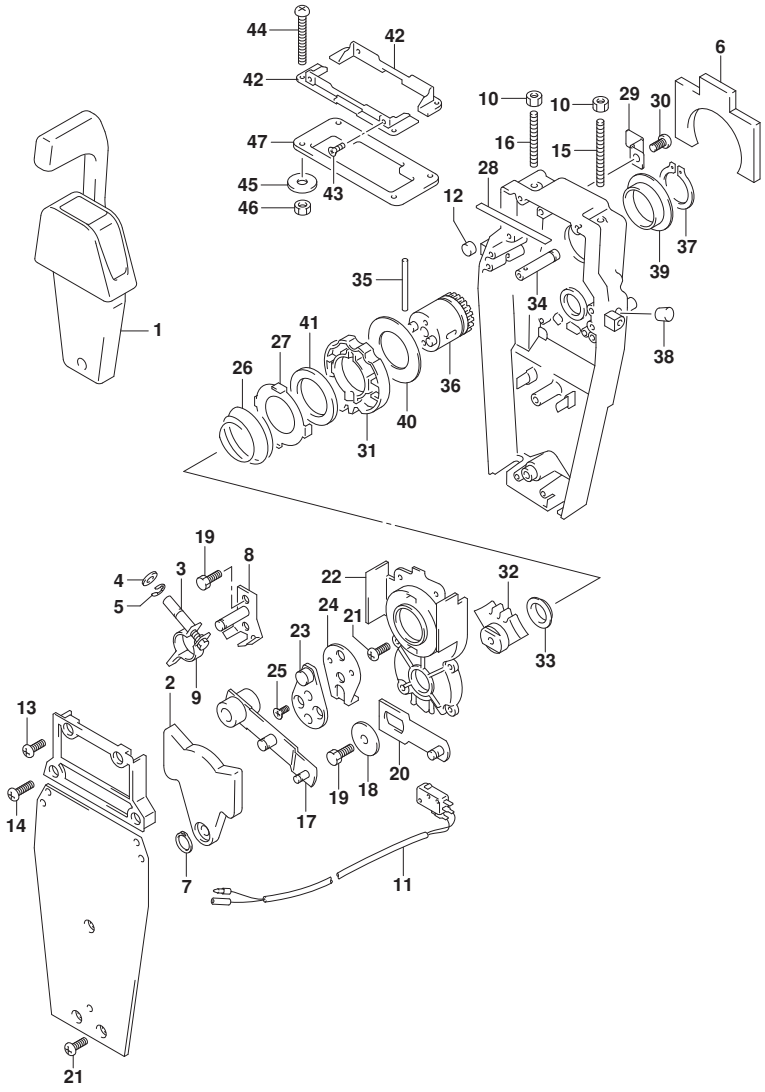

DF90A_E01_020_545A
OPT:REMOTE CONTROL ASSY SINGLE (2)

FIG.545A (2-D-5) OPT:REMOTE CONTROL ASSY SINGLE (2) (DF70A)(DF80A)(DF90A)(DI

REF NO.	PART NO.	DESCRIPTION	Q'TY	REMARKS
24	67227-92E00	.STOPPER	1	
25	09126-06006	.SCREW (6X20)	2	
26	67233-92E00	.SPRING	1	
27	67235-92E00	.PLATE, SHIFT LOCK	1	
28	67237-92E01	.SPRING	5	
29	67269-92E01	.BRACKET	1	
30	67296-88D10	.SCREW	1	
31	67238-88L00	.GEAR, DRIVE	1	
32	67231-88L00	.GEAR, SHIFT	1	
33	67232-88L00	.BUSH, SHIFT GEAR	1	
34	67241-88L00	.ROD, FREE ACCEL	1	
35	67239-92E00	.PIN	1	
36	67246-88L00	.SHIFT, REMOCON DRIVE	1	
37	67291-92E10	.SNAP RING	1	
38	67243-92E00	.CAP, HOLE	1	
39	67252-88L00	.BUSH, REMOCON DRIVE SHAFT	1	
40	67253-88L00	.WASHER, REMOCON DRIVE SHAFT	1	
41	67239-92E10	.PLATE, SHIFT PIN	1	
42	67274-88L00	.FLANGE, COVER BASE (SINGLE)	2	
43	67296-95610	.SCREW	4	
44	67296-92E30	.SCREW	4	

FIG.545A

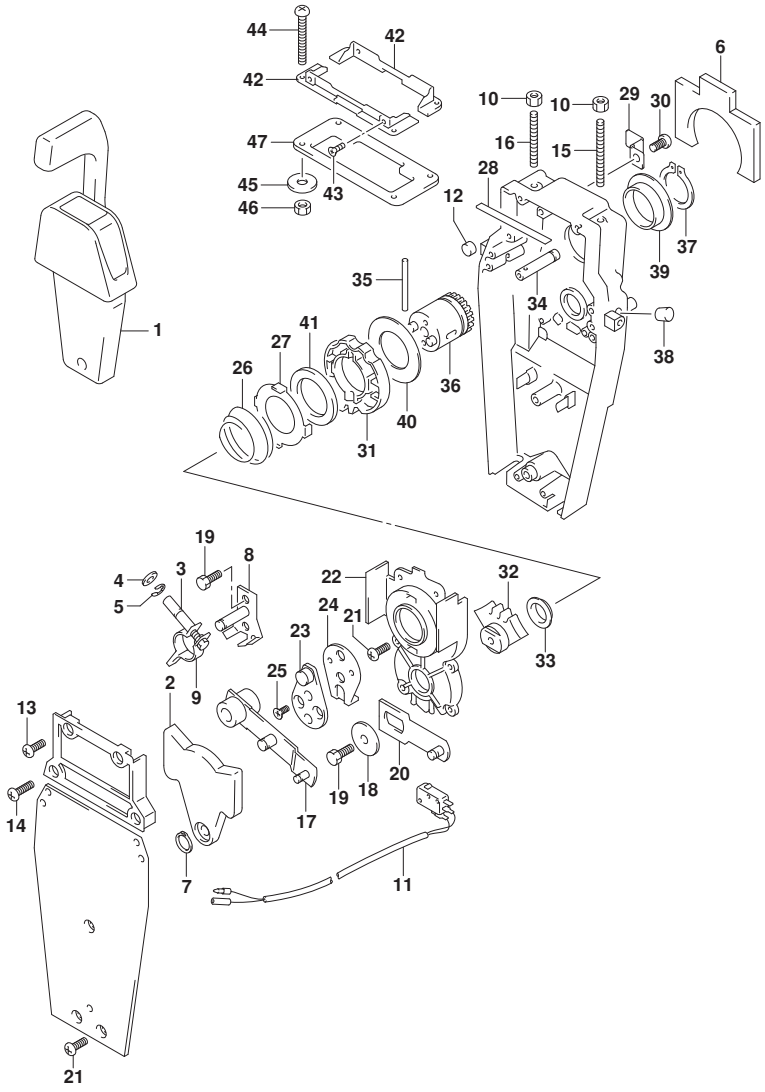

FIG.545A (2-D-6) OPT:REMOTE CONTROL ASSY SINGLE (2) (DF70A)(DF80A)(DF90A)(DI

REF NO.	PART NO.	DESCRIPTION	Q'TY	REMARKS
45	09160-05024	.WASHER (5.5X16X1.5)	4	
46	67287-92E00	.NUT	4	
47	67273-88L00	.GROMMET, REMOCON (SINGLE)	1	

DF70A E01
DF70A E40
DF80A E01
DF80A E40
DF90A E01
DF90A E40
DF100B E01
DF100B E40

DF90A_E01_020_545A
OPT:REMOTE CONTROL ASSY SINGLE (2)

FIG.570A

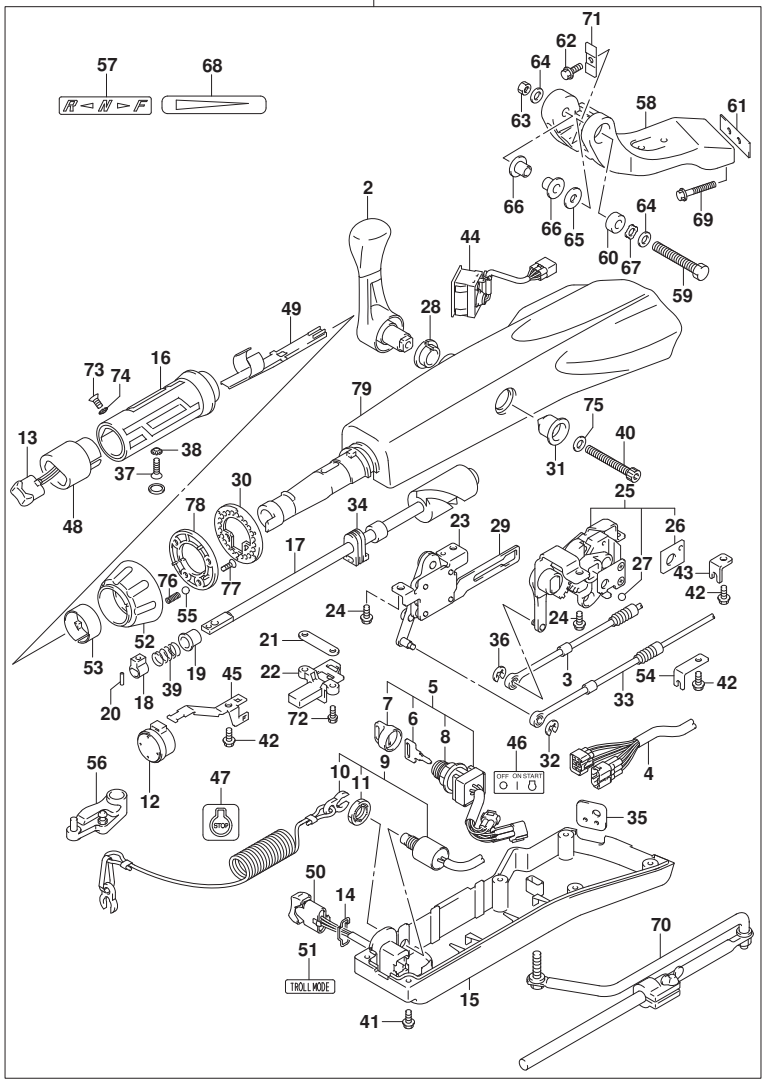

FIG.570A (2-D-7) OPT:TILLER HANDLE (DF70A)(DF80A)(DF90A)(DF100B)

REF NO.	PART NO.	DESCRIPTION	Q'TY	REMARKS
1	63002-87L17-YAY	KIT TILLER HANDLE (BLACK)	1	
2	21110-88L00	.LEVER, SHIFT	1	
3	23230-90J10	.CABLE, SHIFT	1	
4	36620-87L01	.WIRE ASSY, HARNESS	1	
5	37110-87L02	.SWITCH ASSY, IGNITION	1	
6-1	37141-99E00	..KEY (931)	1	
6-2	37141-99E10	..KEY (932)	1	
6-3	37141-99E20	..KEY (933)	1	
6-4	37141-99E30	..KEY (934)	1	
6-5	37141-99E40	..KEY (935)	1	
6-6	37141-99E50	..KEY (936)	1	
6-7	37141-99E60	..KEY (937)	1	
6-8	37141-99E70	..KEY (938)	1	
6-9	37141-99E80	..KEY (939)	1	
6-10	37141-99E90	..KEY (940)	1	
6-11	37141-99EA0	..KEY (941)	1	
6-12	37141-99EB0	..KEY (942)	1	
7	37143-99E01	..CAP, KEY	1	
8	37149-93J00	..CAP, CYLINDER BODY	1	
9	37820-87L11	.SWITCH ASSY, EMERGENCY	1	
10	37823-92E02	..PLATE, LOCK	1	
11	37826-92J10	..NUT	1	
12	38500-93J90	.BUZZER	1	

DF90A_E01_020_570A
OPT:TILLER HANDLE

FIG.570A

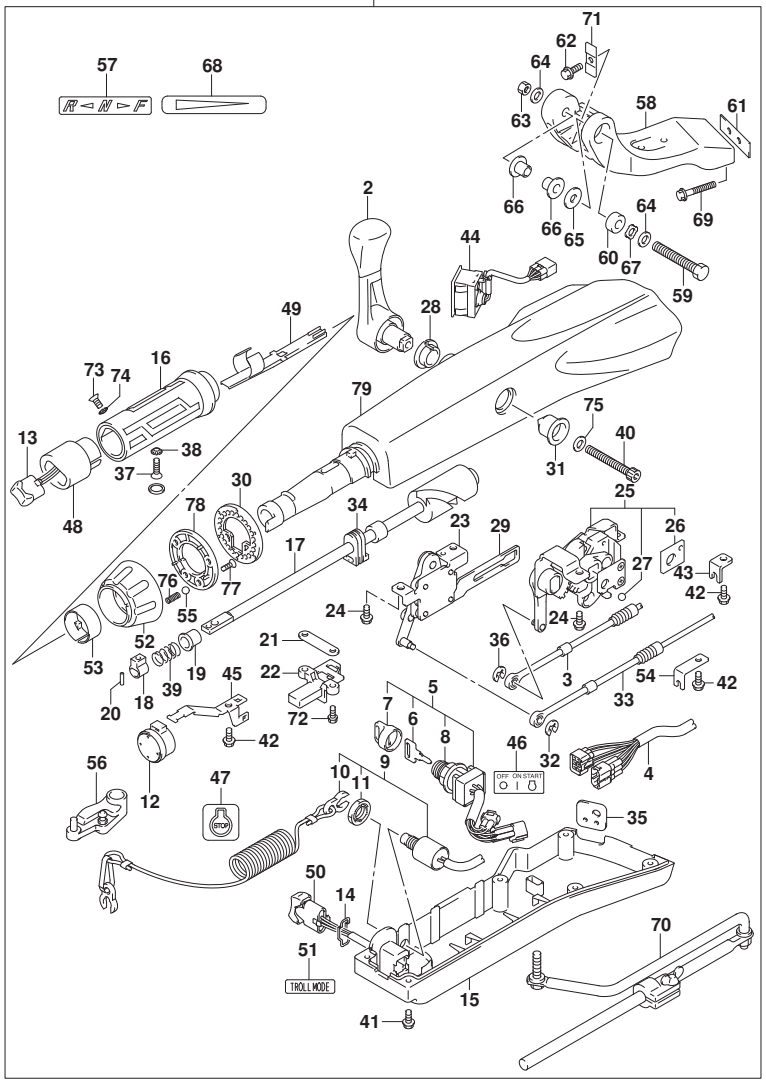

FIG.570A (2-D-8) OPT:TILLER HANDLE (DF70A)(DF80A)(DF90A)(DF100B)

REF NO.	PART NO.	DESCRIPTION	Q'TY	REMARKS
13	37850-87L01	.SWITCH ASSY, PTT	1	
14	37852-87J00	.PLATE, TRIM SWITCH	1	
15	63121-88L10	.COVER, UNDER	1	
16	63210-88L00	.GRIP, HANDLE	1	
17	63221-88L00	.SHAFT, THROTTLE	1	
18	63223-92D00	.STOPPER, HANDLE ROD	1	
19	63225-88L00	.BUSH, HANDLE ROD	1	
20	63227-93200	.PIN, HANDLE ROD	1	
21	63235-88L00	.PLATE, THROTTLE SHAFT	1	
22	63246-88L00	.STOPPER THROTTLE ADJ	1	
23	63250-88L00	.ARM ASSY, THROTTLE	1	
24	63251-87J00	.BOLT, SHIFT GEAR ASSY	4	
25	63260-88L00	.GEAR ASSY, SHIFT	1	
26	63272-87J00	..PLATE, BALL GUIDE	1	
27	63273-87J00	..BALL	1	
28	63262-87J00	.BUSH, SHIFT LEVER	1	
29	63271-87J00	.PLATE, LOCK	1	
30	63248-99J00	.PLATE, THROTTLE ADJ NOTCH	1	
31	63261-87J00	.BUSH, SHIFT GEAR	1	
32	63274-87J00	.E RING	1	
33	63610-87J00	.CABLE, THROTTLE	1	
34	37853-88L90	.GROMMET, PTT SWITCH LEAD	1	
35	63626-88L00	.GROMMET, WIRE HARNESS	1	

DF90A_E01_020_570A
OPT:TILLER HANDLE

FIG.570A

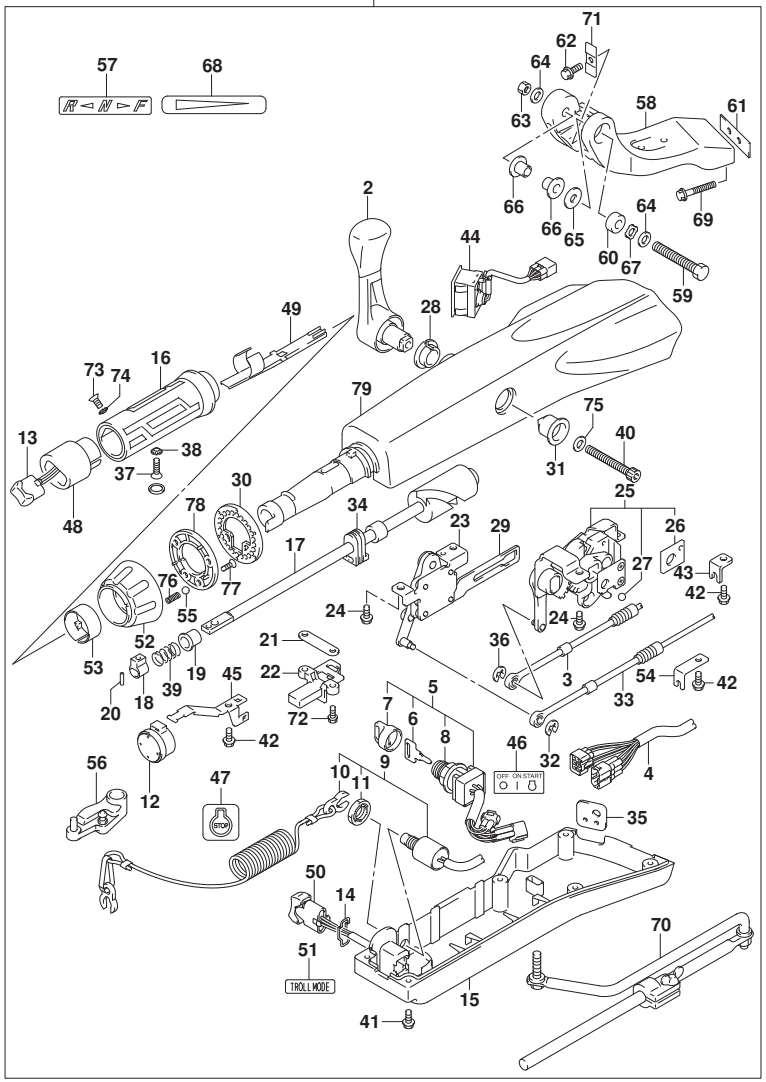

FIG.570A (2-D-9) OPT:TILLER HANDLE (DF70A)(DF80A)(DF90A)(DF100B)

REF NO.	PART NO.	DESCRIPTION	Q'TY	REMARKS
36	67292-87J00	.E RING	2	
37	09126-06015	.SCREW (6X23)	1	
38	09163-06001	.LOCK WASHER	1	
39	09440-12027	.SPRING	1	
40	21112-88L00	.BOLT SHIFT LEVER	1	
41	09125-05047	.SCREW (5X14)	6	
42	63611-88L00	.BOLT CLAMP BRACKET	3	
43	63612-87J00	.BRACKET, CLAMP	1	
44	34200-87L00	.TACHOMETER ASSY, WITH MONITOR	1	
45	36617-88L90	.CLAMP PLATE, MAIN HARNESS	1	
46	37112-88L91	.LABEL, IGNITION SWITCH	1	
47	37835-91J00-YAY	.LABEL, STOP (BLACK)	1	
48	37851-88L90	.BASE, PTT SWITCH	1	
49	37852-88L90	.HARNESS, GUIDE	1	
50	37861-87L11	.SWITCH, TROLLING CONTROL	1	
51	37864-88L91	.LABEL, TROLL MODE	1	
52	63244-99J00	.KNOB, THROTTLE ADJ	1	
53	63245-99J00	.BUSH, THROTTLE ADJ	1	
54	63612-88L10	.BRACKET, CLAMP SHIFT	1	
55	09260-10006	.BALL	1	
56	19120-87L10	.LEVER, THROTTLE	1	
57	21131-88L02	.MARK, CLUTCH SHIFT	1	

DF90A_E01_020_570A
OPT:TILLER HANDLE

FIG.570A

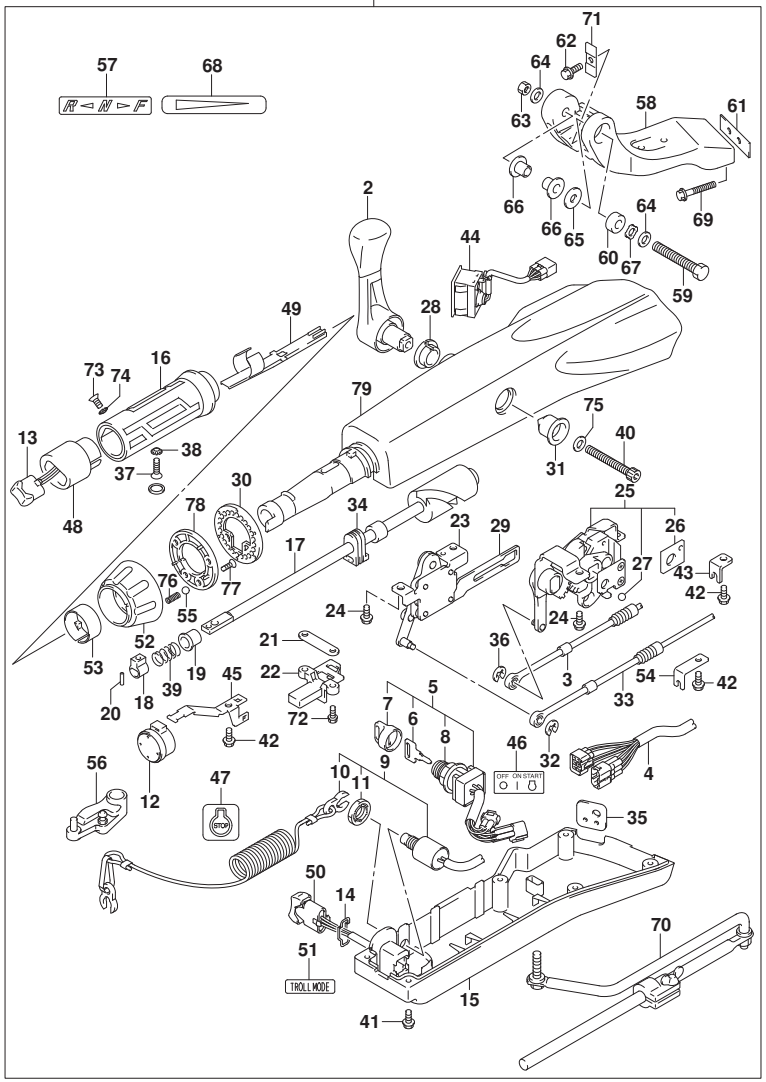

FIG.570A (2-D-10) OPT:TILLER HANDLE (DF70A)(DF80A)(DF90A)(DF100B)

REF NO.	PART NO.	DESCRIPTION	Q'TY	REMARKS
58	43761-88L01-YAY	.BRACKET, TILLER HANDLE (BLACK)	1	
59	43762-88L00	.BOLT TILLER HANDLE PIVOT	1	
60	43768-88L00	.SPACER, TILLER HANDLE	1	
61	43776-87L00	.SPACER, STRG BRKT	1	
62	09116-08137	.BOLT (8X22)	1	
63	09159-12014	.NUT	1	
64	09160-12066	.WASHER (12.5X22X2.5)	2	
65	09160-12124	.WASHER (12.5X32X1.5)	1	
66	63115-88L01	.BUSH, TILLER HANDLE	2	
67	09164-13010	.WASHER	1	
68	63215-93110	.MARK, HANDLE GRIP	1	
69	09116-10150	.BOLT (10X55)	2	
70	43770-99E03	.ADJUSTER ASSY, STEERING	1	
71	63132-88L00	.STOPPER, TILLER HANDLE	1	
72	63251-88L90	.BOLT	2	
73	37855-88L90	.SCREW, THROTTLE GRIP	1	
74	37854-88L90	.WASHER, THROTTLE GRIP	1	
75	63258-88L00	.WASHER	1	
76	09440-06037	.SPRING	1	
77	03522-05169	.SCREW	3	

DF90A_E01_020_570A
OPT:TILLER HANDLE

FIG.570A

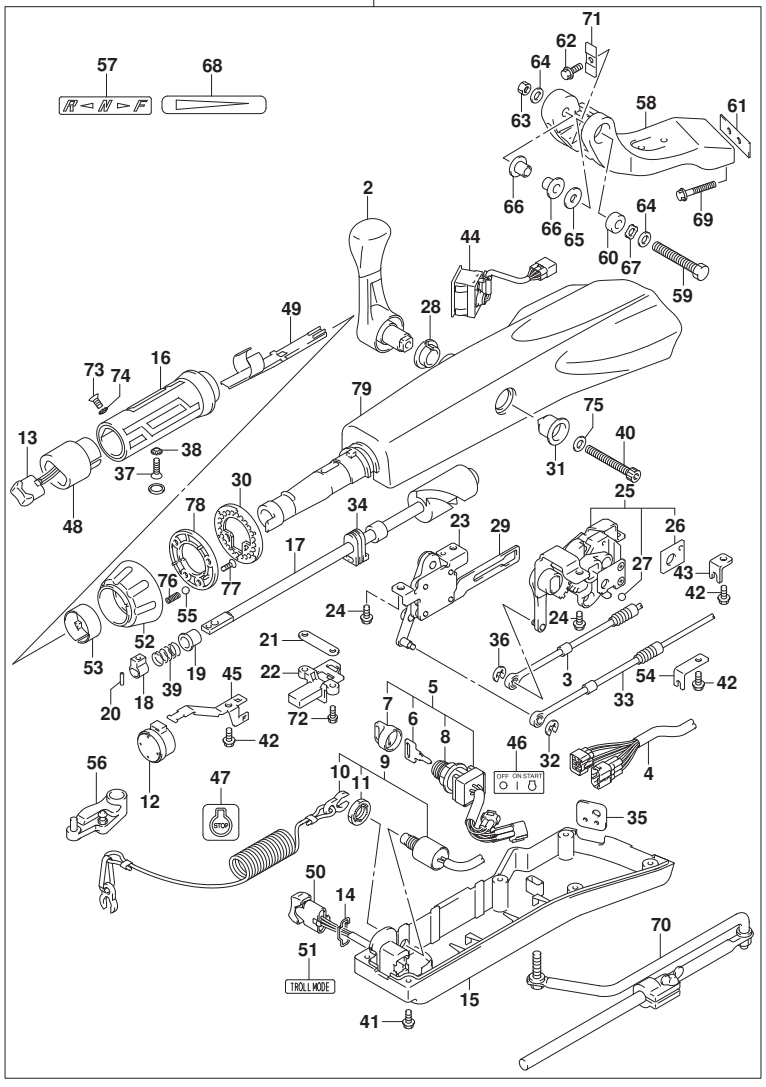

DF90A_E01_020_570A
OPT:TILLER HANDLE

FIG.570A (2-D-11) OPT:TILLER HANDLE (DF70A)(DF80A)(DF90A)(DF100B)

REF NO.	PART NO.	DESCRIPTION	Q'TY	REMARKS
78	63247-99J00	.PLATE, THROTTLE ADJ KNOB	1	
79	63111-88L00-YAY	.HOUSING, TILLER HANDLE (BLACK)	1	

DF70A E01
DF70A E40
DF80A E01
DF80A E40
DF90A E01
DF90A E40
DF100B E01
DF100B E40

FIG.585A

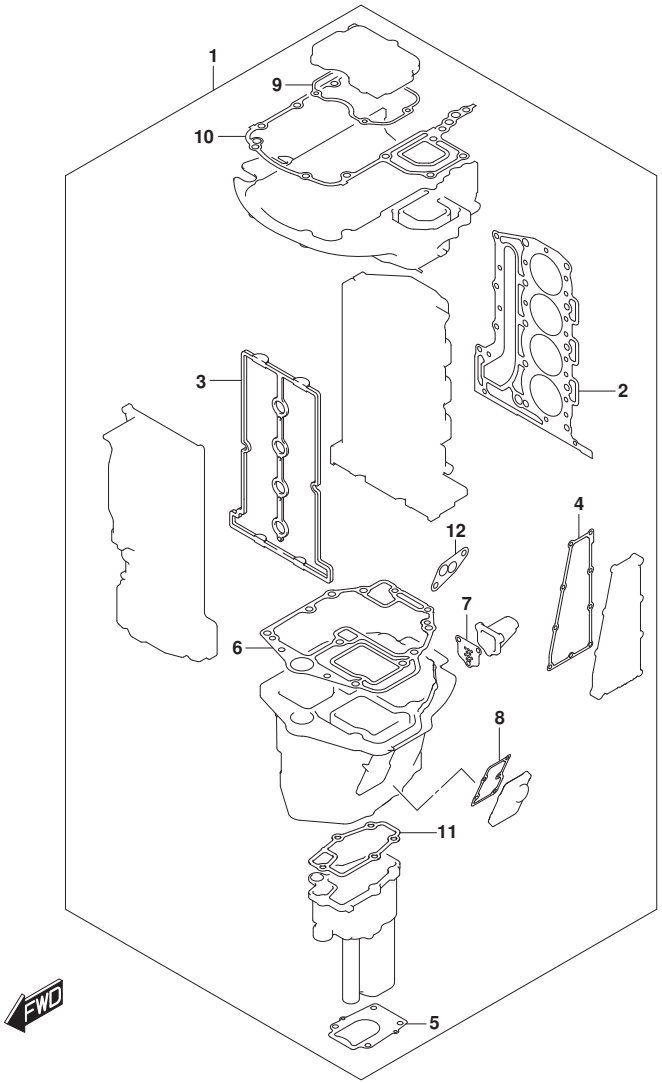

FIG.585A (2-D-12) OPT:GASKET SET (DF70A)(DF70ATH)(DF80A)(DF90A)(DF90ATH)

REF NO.	PART NO.	DESCRIPTION	Q'TY	REMARKS
1	11410-87851	GASKET SET	1	
2	11141-87L00	.GASKET, CYLINDER HEAD	1	
3	11189-87L00	.GASKET, CYLINDER HEAD COVER	1	
4	14151-87L00	.GASKET, EXH COVER	1	
5	17472-87L00	.GASKET, PUMP CASE PANEL	1	
6	11489-87L00	.GASKET, OIL PAN	1	
7	11542-87L00	.GASKET, EXH TUBE	1	
8	11552-87L00	.GASKET, OIL PAN WTR JKT COV	1	
9	51123-87L00	.GASKET, MOUNT CASE COVER	1	
10	51211-87L10	.GASKET, ENGINE HOLDER	1	
11	52331-87L00	.GASKET, EXH TUBE HOUSING	1	
12	16539-87L00	.GASKET, OIL FILTER ADAPTER CASE	1	

DF70A E01
DF70A E40
DF70ATH E01
DF70ATH E40
DF80A E01
DF80A E40
DF90A E01
DF90A E40
DF90ATH E01
DF90ATH E40

DF90A_E01_020_585A
OPT:GASKET SET

FIG.585B

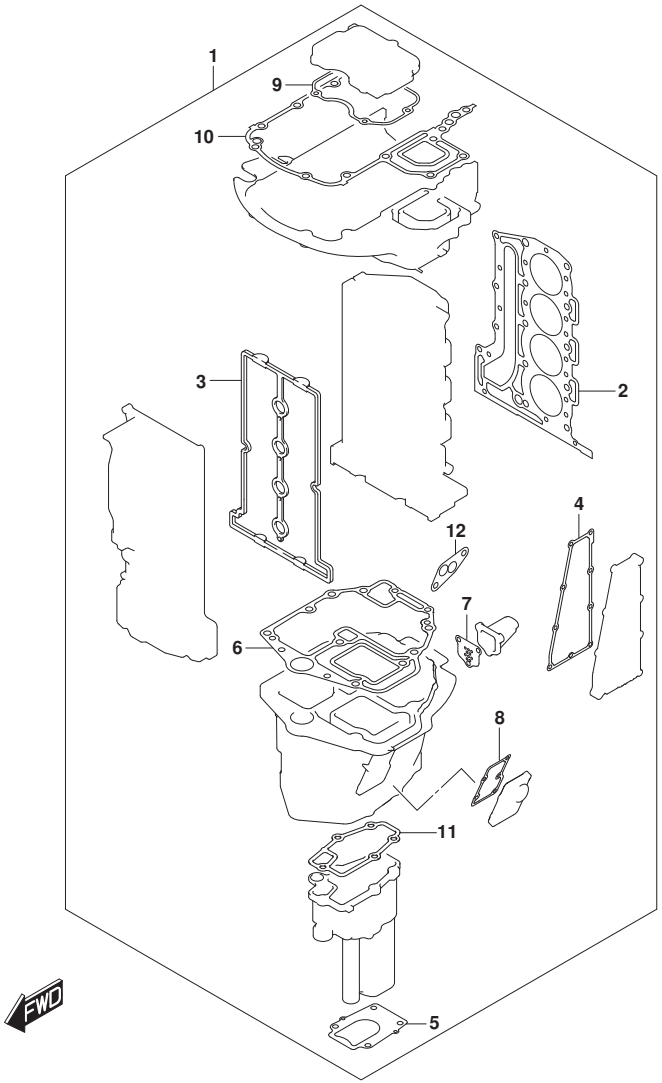

FIG.585B (2-D-13) OPT:GASKET SET (DF100B)

REF NO.	PART NO.	DESCRIPTION	Q'TY	REMARKS
1	11410-87851	GASKET SET	1	
2	11141-87L00	.GASKET, CYLINDER HEAD	1	
3	11189-87L00	.GASKET, CYLINDER HEAD COVER	1	
4	14151-87L00	.GASKET, EXH COVER	1	
5	17472-87L00	.GASKET, PUMP CASE PANEL	1	
6	11489-87L00	.GASKET, OIL PAN	1	
7	11542-87L00	.GASKET, EXH TUBE	1	
8	11552-87L00	.GASKET, OIL PAN WTR JKT COV	1	
9	51123-87L00	.GASKET, MOUNT CASE COVER	1	
10	51211-87L10	.GASKET, ENGINE HOLDER	1	
11	52331-87L00	.GASKET, EXH TUBE HOUSING	1	
12	16539-87L00	.GASKET, OIL FILTER ADAPTER CASE	1	

DF100B E01
DF100B E40

DF90A_E01_020_585B
OPT:GASKET SET

FIG.600A

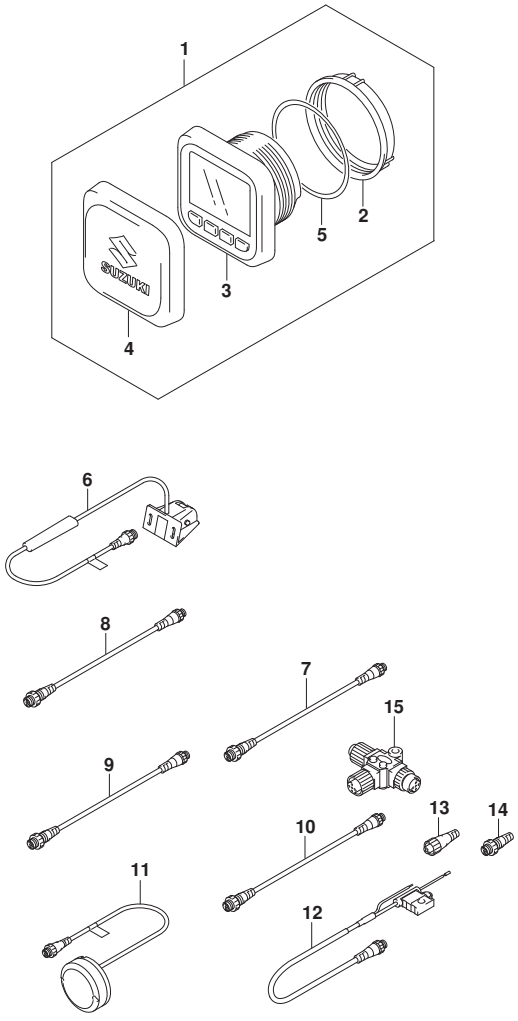

FIG.600A (2-D-14) OPT:MULTI FUNCTION GAUGE (DF70ATH)(DF90ATH)

REF NO.	PART NO.	DESCRIPTION	Q'TY	REMARKS
1	34011-96L15	SET, MULTI GAUGE	1	
2	34112-96L00	.NUT, GAUGE	1	
3	34193-96L00	.BEZEL, GAUGE	1	
4	34211-96L00	.COVER, GAUGE	1	
5	34825-96L00	.PACKING, GAUGE	1	
6	34190-88L00	SENSOR ASSY, PAD WHEEL	1	
7	36662-88L10	WIRE, 2 EXTENSION	1	
8	36662-88L20	WIRE, 6 EXTENSION	1	
9	36662-88L30	WIRE, 15 EXTENSION	1	
10	36662-88L00	WIRE, 25 EXTENSION	1	
11	39950-88L02	MODULE ASSY, GPS RECEIVER	1	
12	36663-88L00	HARNESS ASSY, NETWORK POWER	1	
13	36665-88L00	UNIT, RESISTOR FEMALE	1	
14	36665-88L10	UNIT, RESISTOR MALE	1	
15	36664-88L00	CONNECTOR, BRANCH	1	

DF70ATH E01
DF70ATH E40
DF90ATH E01
DF90ATH E40

FIG.601A

FIG.601A (2-D-15) OPT:MULTI FUNCTION GAUGE (1) (DF70A)(DF80A)(DF90A)(DF100B)

REF NO.	PART NO.	DESCRIPTION	Q'TY	REMARKS
1	34000-96L44	KIT, SINGLE GAUGE MECH	1	
2	34011-96L14	.SET, MULTI GAUGE	1	
3	34112-96L00	..NUT, GAUGE	1	
4	34193-96L00	..BEZEL, GAUGE	1	
5	34211-96L00	..COVER, GAUGE	1	
6	34825-96L00	..PACKING, GAUGE	1	
7	36661-96L30	.ADAPTER, GAUGE	1	
8	36615-96300	..TERMINAL	5	

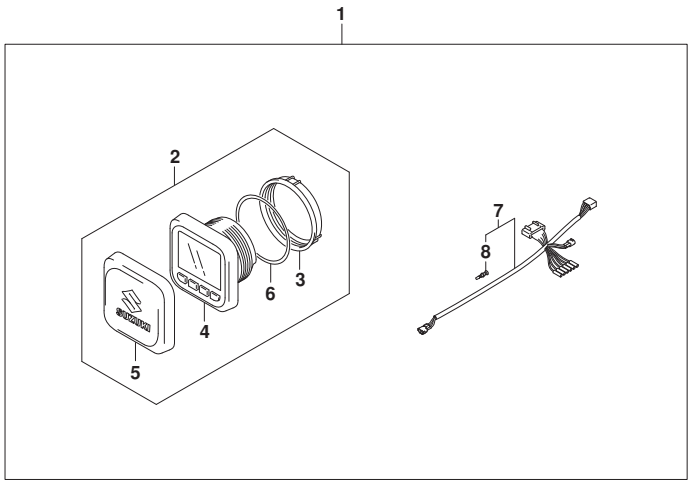

DF70A E01
DF70A E40
DF80A E01
DF80A E40
DF90A E01
DF90A E40
DF100B E01
DF100B E40

FIG.601B

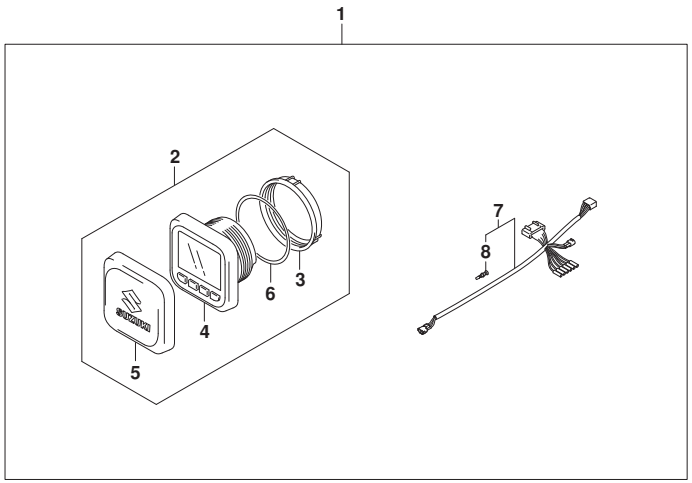

FIG.601B (2-E-2) OPT:MULTI FUNCTION GAUGE (1) (DF90AWQH)

REF NO.	PART NO.	DESCRIPTION	Q'TY	REMARKS
1	34000-96L44	KIT, SINGLE GAUGE MECH	1	
2	34011-96L14	.SET, MULTI GAUGE	1	
3	34112-96L00	..NUT, GAUGE	1	
4	34193-96L00	..BEZEL, GAUGE	1	
5	34211-96L00	..COVER, GAUGE	1	
6	34825-96L00	..PACKING, GAUGE	1	
7	36661-96L30	.ADAPTER, GAUGE	1	
8	36615-96300	..TERMINAL	5	

DF90AWQH E40

FIG.602A

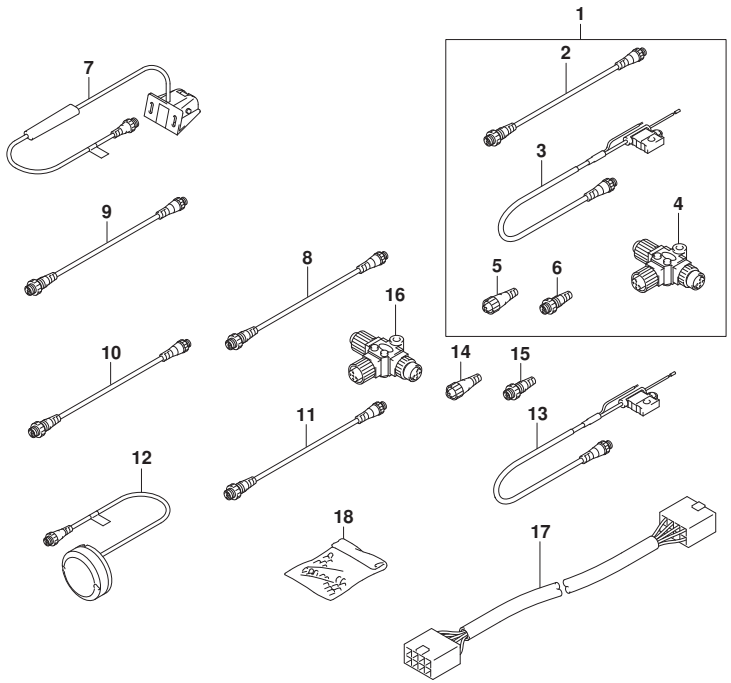

FIG.602A (2-E-3) OPT:MULTI FUNCTION GAUGE (2) (DF70A)(DF80A)(DF90A)(DF100B)

REF NO.	PART NO.	DESCRIPTION	Q'TY	REMARKS
1	36001-88L00	SET, WIRE	1	
2	36662-88L10	.WIRE, 2 EXTENSION	1	
3	36663-88L00	.HARNESS ASSY, NETWORK POWER	1	
4	36664-88L00	.CONNECTOR, BRANCH	1	
5	36665-88L00	.UNIT, RESISTOR FEMALE	1	
6	36665-88L10	.UNIT, RESISTOR MALE	1	
7	34190-88L00	SENSOR ASSY, PAD WHEEL	1	
8	36662-88L10	WIRE, 2 EXTENSION	1	
9	36662-88L20	WIRE, 6 EXTENSION	1	
10	36662-88L30	WIRE, 15 EXTENSION	1	
11	36662-88L00	WIRE, 25 EXTENSION	1	
12	39950-88L02	MODULE ASSY, GPS RECEIVER	1	
13	36663-88L00	HARNESS ASSY, NETWORK POWER	1	
14	36665-88L00	UNIT, RESISTOR FEMALE	1	
15	36665-88L10	UNIT, RESISTOR MALE	1	
16	36664-88L00	CONNECTOR, BRANCH	1	
17	36667-96L20	WIRE, DUAL GAUGE ADAPTER	1	
18	36990-87D00	TERMINAL SET, WITH SLEEVE	1	

DF70A E01
DF70A E40
DF80A E01
DF80A E40
DF90A E01
DF90A E40
DF100B E01
DF100B E40

FIG.602B

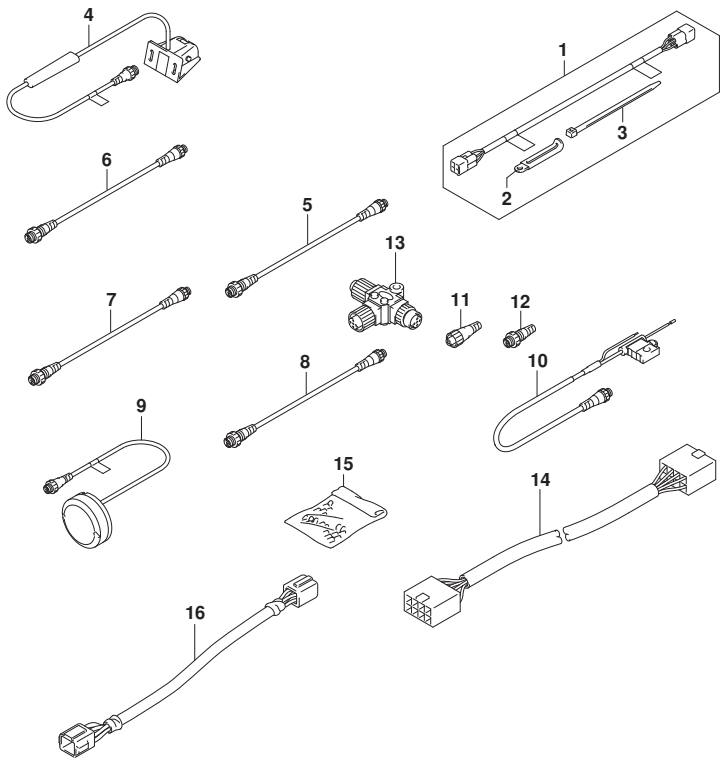

FIG.602B (2-E-4) OPT:MULTI FUNCTION GAUGE (2) (DF90AWQH)

REF NO.	PART NO.	DESCRIPTION	Q'TY	REMARKS
1	36660-89L03	SET,ENG TO INTERFACE WIRE	1	
2	29404-93J01	.CLAMP	1	
3	09407-14407	.CLAMP(L:145)	1	
4	34190-88L00	SENSOR ASSY, PAD WHEEL	1	
5	36662-88L10	WIRE, 2 EXTENSION	1	
6	36662-88L20	WIRE, 6 EXTENSION	1	
7	36662-88L30	WIRE, 15 EXTENSION	1	
8	36662-88L00	WIRE, 25 EXTENSION	1	
9	39950-88L02	MODULE ASSY, GPS RECEIVER	1	
10	36663-88L00	HARNESS ASSY, NETWORK POWER	1	
11	36665-88L00	UNIT, RESISTOR FEMALE	1	
12	36665-88L10	UNIT, RESISTOR MALE	1	
13	36664-88L00	CONNECTOR, BRANCH	1	
14	36667-96L20	WIRE, DUAL GAUGE ADAPTER	1	
15	36990-87D00	TERMINAL SET, WITH SLEEVE	1	
16	36682-92E00	WIRE,TRIM METER EXT(L:6500)	1	

DF90AWQH E40

10000

PART NO.	FIG.NO.-REF.NO.
11100-87L10	111A-1
	111B-1
11112-96L00	111A-14
	111B-14
11115-73G01-001	111A-4
	111B-4
11117-89J00	111A-10
	111B-10
11117-90J10	113A-4
11118-95J00	204A-18
	204B-18
	204C-18
11118-98J01	113A-8
11141-87L00	111A-11
	111B-11
	585A-2
	585B-2
11170-87L11	111A-17
	111B-17
11173-87L00	111A-21
	111B-21
11189-87L00	111A-18
	111B-18
	585A-3
	585B-3
11194-87L10	111A-27
11194-87L20	111B-27
11196-87L00	162A-1
	162B-1
11216-90J10	113A-5
11223-87L00	113A-12
11224-87L00	113A-14
11241-73003	175A-9
11261-93J00	111A-5
	111B-5
	140A-4
11291-87L00	113A-1
11300-87L11	113A-3
11382-93J00	111A-15
	111B-15
11410-87851	585A-1
	585B-1
11489-87L00	180A-1
	180B-1
	585A-6

PART NO.	FIG.NO.-REF.NO.
	585B-6
11501-87L10-Y5S	180A-2-2
11501-87L10-YAY	180A-2-1
	180B-2
11510-87L03	136A-1
11514-87L00	136A-5
11541-87L00-Y5S	180A-3-2
11541-87L00-YAY	180A-3-1
	180B-3
11542-87L00	180A-4
	180B-4
	585A-7
	585B-7
11551-87L00-Y5S	180A-5-2
11551-87L00-YAY	180A-5-1
	180B-5
11552-87L00	180A-6
	180B-6
	585A-8
	585B-8
12100-69830-025	116A-7-6
12100-69830-0A0	116A-7-1
12100-69830-0B0	116A-7-2
12100-69830-0C0	116A-7-3
12100-69830-0D0	116A-7-4
12100-69830-0E0	116A-7-5
12100-87L02-050	116A-13
12111-87L01	116A-1
12140-87L01	116A-2
12140-87L01-050	116A-14
12151-54A50	116A-3
12160-87L10	116A-5
12220-87L00	116A-8
12281-87J00	401A-19
	401B-19
12300-57820-0AA	116A-9-6
12300-57820-0BA	116A-9-7
12300-57820-0CA	116A-9-8
12300-57820-0DA	116A-9-9
12300-57820-0EA	116A-9-10
12300-78890	116A-10
12300-78890-012	116A-11
12340-57K02-0A0	116A-9-4
12340-57K02-0B0	116A-9-5
12340-57K02-0C0	116A-9-1
12340-57K02-0D0	116A-9-2
12340-57K02-0E0	116A-9-3
12701-87L00	121B-1
12701-87L10	121C-1
12701-87L20	121A-1

PART NO.	FIG.NO.-REF.NO.
12705-87L00	121A-2
	121B-2
12705-87L10	121C-2
12730-87L00	119A-1
12741-90J01	121A-3
	121B-3
	121C-3
12748-87L00	121A-4
	121B-4
	121C-4
12749-93J00	121A-5
	121B-5
	121C-5
12761-87L00	119A-4
12771-87L00	119A-5
12810-87L00	119A-7
12812-90J00	119A-10
12813-73G00	119A-8
12831-93J01	119A-11
12891-69J00	121A-8
	121B-8
	121C-8
12892-69J00-208	121A-9-1
	121B-9-1
	121C-9-1
12892-69J00-210	121A-9-2
	121B-9-2
	121C-9-2
12892-69J00-212	121A-9-3
	121B-9-3
	121C-9-3
12892-69J00-214	121A-9-4
	121B-9-4
	121C-9-4
12892-69J00-216	121A-9-5
	121B-9-5
	121C-9-5
12892-69J00-218	121A-9-6
	121B-9-6
	121C-9-6
12892-69J00-220	121A-9-7
	121B-9-7
	121C-9-7
12892-69J00-222	121A-9-8
	121B-9-8
	121C-9-8
12892-69J00-224	121A-9-9
	121B-9-9
	121C-9-9
12892-69J00-226	121A-9-10

PART NO.	FIG.NO.-REF.NO.
	121B-9-10
	121C-9-10
12892-69J00-228	121A-9-11
	121B-9-11
	121C-9-11
12892-69J00-230	121A-9-12
	121B-9-12
	121C-9-12
12892-69J00-232	121A-9-13
	121B-9-13
	121C-9-13
12892-69J00-234	121A-9-14
	121B-9-14
	121C-9-14
12892-69J00-236	121A-9-15
	121B-9-15
	121C-9-15
12892-69J00-238	121A-9-16
	121B-9-16
	121C-9-16
12892-69J00-240	121A-9-17
	121B-9-17
	121C-9-17
12892-69J00-242	121A-9-18
	121B-9-18
	121C-9-18
12892-69J00-244	121A-9-19
	121B-9-19
	121C-9-19
12892-69J00-246	121A-9-20
	121B-9-20
	121C-9-20
12892-69J00-248	121A-9-21
	121B-9-21
	121C-9-21
12892-69J00-250	121A-9-22
	121B-9-22
	121C-9-22
12892-69J00-252	121A-9-23
	121B-9-23
	121C-9-23
12892-69J00-254	121A-9-24
	121B-9-24
	121C-9-24
12892-69J00-256	121A-9-25
	121B-9-25
	121C-9-25
12892-69J00-258	121A-9-26
	121B-9-26
	121C-9-26

PART NO.	FIG.NO.-REF.NO.
12892-69J00-260	121A-9-27
	121B-9-27
	121C-9-27
12892-69J00-262	121A-9-28
	121B-9-28
	121C-9-28
12892-69J00-264	121A-9-29
	121B-9-29
	121C-9-29
12892-69J00-266	121A-9-30
	121B-9-30
	121C-9-30
12892-69J00-268	121A-9-31
	121B-9-31
	121C-9-31
12892-69J00-270	121A-9-32
	121B-9-32
	121C-9-32
12892-69J00-272	121A-9-33
	121B-9-33
	121C-9-33
12892-69J00-274	121A-9-34
	121B-9-34
	121C-9-34
12892-69J00-276	121A-9-35
	121B-9-35
	121C-9-35
12892-69J00-278	121A-9-36
	121B-9-36
	121C-9-36
12892-69J00-280	121A-9-37
	121B-9-37
	121C-9-37
12892-69J00-282	121A-9-38
	121B-9-38
	121C-9-38
12892-69J00-284	121A-9-39
	121B-9-39
	121C-9-39
12892-69J00-286	121A-9-40
	121B-9-40
	121C-9-40
12892-69J00-288	121A-9-41
	121B-9-41
	121C-9-41
12892-69J00-290	121A-9-42
	121B-9-42
	121C-9-42
12911-87L00	121A-10
	121B-10

PART NO.	FIG.NO.-REF.NO.
	121C-10
12915-87L50	121A-11
	121B-11
	121C-11
12921-87J11	121A-12
	121B-12
	121C-12
12931-78G00	121A-13
	121B-13
	121C-13
12932-24400	121A-14
	121B-14
	121C-14
12933-51E00	121A-15
	121B-15
	121C-15
13110-87L00	122A-1
13119-87L00	122A-2
13125-87L00	122A-3
13300-87L11	163A-1
	163B-1
13315-87L00	163A-4
	163B-4
13353-99E00	163A-2
	163B-2
13354-99E00	163A-3
	163B-3
13370-88L00	143A-2
13370-88L10	143B-2
13510-87L00	163A-9
	163B-9
13614-89J00	143B-15
13614-93J00	143B-16
13650-52G00	315A-1
	315B-1
	315C-1
13655-87J01	315A-2
	315B-2
	315C-2
13710-99E00	134A-1
13810-87L00	134A-2
13813-87L01	134A-3
14141-87L00	140A-1
14151-87L00	140A-2
	585A-4
	585B-4
15100-90J11	146A-1
	146B-1
15190-87L00	146A-10
15190-87L20	146B-11

PART NO.	FIG.NO.-REF.NO.
15192-87L11	146A-11
15192-87L30	146B-12
15195-87L00	146B-22
15195-96L00	146B-24
15198-87L00	146A-16
	146B-17
15200-92J20	143A-3
15200-92J30	143B-3
15410-87L00	146A-4
15410-92J10	146B-4
15411-92J10	146B-5
15412-92J00	146B-6
15413-92J00	146B-7
15415-92J00	146B-8
15419-87J00	146A-5
15419-92J00	146A-19
	146B-20
15421-87L00	146A-8
15421-87L10	146B-9
15422-96J00	146A-7
15600-92J40	143A-1
15600-92J50	143B-1
15610-92J00	143A-27
	143B-27
15612-88L00	143A-21
	143B-21
15613-88L00	143A-22
	143B-22
15613-92J00	143A-25
	143B-25
15614-88L00	143A-23
	143B-23
15620-92J00	143A-26
15620-92J10	143B-26
15626-92J01	143A-4
15626-92J10	143B-4
15628-99E00	143A-5
	143B-5
15629-99E10	143A-6
	143B-6
15641-88L00	143A-7
15641-88L10	143B-7
15641-88L31	143A-18
	143B-18
15641-88L51	143A-19
	143B-19
15642-88L00	143A-8
	143B-8
15642-88L10	143A-20
	143B-20

PART NO.	FIG.NO.-REF.NO.
15643-88L10	143A-17
	143B-17
15644-88L00	143A-13
15644-88L10	143B-13
15645-88L00	143A-14
	143B-14
15648-92J00	143A-16
	143B-24
15650-99E00	143A-9
	143B-9
15654-88L00	143A-10
	143B-10
15681-92J01	144A-1
	144B-1
15683-87J00	143A-11
	143B-11
15691-92J00	143A-30
	143B-30
15710-82K50	144A-2
	144B-2
15716-65DT0	144A-3
	144B-3
15750-87L30	144A-4
15750-87L40	144B-4
15760-88L00	143A-12
	143B-12
15830-87L30	144A-5
15830-87L40	144B-5
15831-96L00	146B-23
16400-87L00	175A-1
16440-99E00	175A-3
16510-61A31	175A-10
16519-87L00	175A-8
16520-87L00	175A-5
16531-87L00	175A-11
16539-87L00	175A-12
	585A-12
	585B-12
16910-87L00	180A-17
	180B-17
16930-87L00	180A-18
	180B-18
17400-87L04	160A-18
	160B-18
	160C-18
	160D-18
	160E-18
	160J-18
17400-87L12	160F-18
	160G-18

PART NO.	FIG.NO.-REF.NO.
	160H-18
	160K-18
17410-99E10	160A-1
	160B-1
	160C-1
	160D-1
	160E-1
	160F-1
	160G-1
	160H-1
	160J-1
	160K-1
17413-99E11	160A-16
	160B-16
	160C-16
	160D-16
	160E-16
	160J-16
17413-99E21	160F-16
	160G-16
	160H-16
	160K-16
17416-99E11	160A-17
	160B-17
	160C-17
	160D-17
	160E-17
	160F-17
	160G-17
	160H-17
	160J-17
	160K-17
17461-87E12	160A-2
	160B-2
	160C-2
	160D-2
	160E-2
	160F-2
	160G-2
	160H-2
17461-87L00	160J-2
	160K-2
17471-87L01	160A-3
	160B-3
	160C-3
	160D-3
	160E-3
	160J-3
17471-87L11	160F-3
	160G-3

PART NO.	FIG.NO.-REF.NO.
	160H-3
	160K-3
17472-87L00	160A-4
	160B-4
	160C-4
	160D-4
	160E-4
	160F-4
	160G-4
	160H-4
	160J-4
	160K-4
	585A-5
	585B-5
17561-87L20	160A-5-1
	160B-5
	160C-5-1
	160D-5-1
	160E-5
	160F-5-1
	160G-5-1
	160H-5-1
	160J-5-1
	160K-5-1
17561-87L30	160A-5-2
	160C-5-2
	160D-5-2
	160F-5-2
	160G-5-2
	160H-5-2
	160J-5-2
	160K-5-2
17562-87L01	160A-6
	160B-6
	160C-6
	160D-6
	160E-6
	160F-6
	160G-6
	160H-6
	160J-6
	160K-6
17563-87D01	160A-7
	160B-7
	160C-7
	160D-7
	160E-7
	160F-7
	160G-7
	160H-7

PART NO.	FIG.NO.-REF.NO.
	160J-7
	160K-7
	407E-28
17564-87D00	160A-8
	160B-8
	160C-8
	160D-8
	160E-8
	160F-8
	160G-8
	160H-8
	160J-8
	160K-8
17570-87L00	407E-27
17611-90J00	162A-2
	162B-2
17631-87L00	160A-9
	160B-9
	160C-9
	160D-9
	160E-9
	160F-9
	160G-9
	160H-9
	160J-9
	160K-9
17632-87L01	160A-10
	160B-10
	160C-10
	160D-10
	160E-10
	160F-10
	160G-10
	160H-10
	160J-10
	160K-10
17660-99E01	162A-3
	162B-3
17670-90J01	162A-4-1
	162B-4-1
17670-90J11	162A-4-2
	162B-4-2
17681-87L00	162A-5
	162B-5
17685-87L01	162A-6
	162B-6
17913-93J00	180A-8
	180B-8
	410A-15
	410B-15

PART NO.	FIG.NO.-REF.NO.
	410C-15
	410D-15
17914-93J01	180A-9
	180B-9
	410A-16
	410B-16
	410C-16
	410D-16
17915-87L00	162A-11
	162B-11
17917-87L00	410A-40
	410B-40
	410C-40
	410D-40
18137-87L02	122A-8
18498-87J21	146A-13
18498-87J51	144A-8
	144B-8
18498-95J01	111A-24
	111B-24
18498-96J21	146B-14
18498-99E01	143A-33
	143B-33
18498-99E11	146A-14
	146B-15
18498-99EA1	507A-6
18590-68H00	315A-3
	315B-3
	315C-3
19115-87L00	163A-10
	163B-10
19120-87L00	163A-11
19120-87L10	163B-11
	570A-56
19131-95502	163A-12
	163B-12
20000	
21110-87L10	204A-1
	204B-1
	204C-1
21110-88L00	444A-3
	444B-3

PART NO.	FIG.NO.-REF.NO.
	570A-2
21112-88L00	444A-41
	570A-40
21112-88L10	444B-41
21131-88L02	444A-71
	444B-69
	570A-57
21131-93J00	204A-2
	204B-2
	204C-2
21151-87L00	204A-3
	204B-3
	204C-3
21152-87L00	204A-4
	204B-4
	204C-4
21153-87L00	204A-5
	204B-5
	204C-5
21157-87L00	204A-6
	204B-6
	204C-6
21210-87L01	204A-13
	204B-13
	204C-13
22511-99011	204A-22
	204B-22
	204C-22
	336A-1
	336B-1
	336C-1
	336D-1
23115-87L00	204A-7
	204B-7
	204C-7
23230-90J10	444A-4
	444B-4
	570A-3
25111-87L01	206A-1-1
	206B-1
	206C-1-1
25111-87L11	206A-1-2
	206C-1-2
25131-87L01	206A-2
	206B-2
	206C-2
25141-87L00	206A-5
	206B-5
	206C-5
25223-94400	206A-6

PART NO.	FIG.NO.-REF.NO.
	206B-6
	206C-6
25232-96302	206A-3
	206B-3
	206C-3
25700-87L00	407A-28
	407B-28
	407C-26
	407D-28
	407E-31
29103-93J00	315A-17
	315C-17
29116-93J00	180A-11
	180B-11
	206A-7
	206B-7
	206C-7
	401A-12
	401B-12
29116-93J10	160A-11
	160B-11
	160C-11
	160D-11
	160E-11
	160F-11
	160G-11
	160H-11
	160J-11
	160K-11
29404-93J01	180A-12
	180B-12
	602B-2
30000	
31100-98L10	301A-1
31111-94900	340A-10
	340B-10
31123-94910	340A-4
	340B-4
31133-90J10	340A-5
	340B-5
31133-94910	340A-6
	340B-6
31135-94900	340A-8

PART NO.	FIG.NO.-REF.NO.
	340B-8
31136-90J20	340A-7
	340B-7
31150-98L00	301A-2
31170-92J00	301A-3
31173-94920	340A-3
	340B-3
31173-98L00	301A-4
31191-63J00	301A-5
31192-92J00	301A-8
31220-98L10	301A-6
31261-75F10	301A-9
31281-92J10	337A-8
	337B-8
31311-63J00	301A-7
31311-93J00	340A-2
	340B-2
31313-86030	301A-11
31320-98L00	301A-12
31340-98L00	301A-10
31341-98L00	301A-13
31343-63J00	301A-14
31344-63J00	301A-15
31912-87L00	301A-16
31918-92J01	301A-17
32102-87L00	303A-1
32120-87L10	303A-5
32160-87L00	303A-6
32800-87L00	310A-1
32851-93J00	331A-1
	535A-15
32890-87L10	310A-3
32980-38F00	331A-2
	535A-16
33220-64L10	303A-8
33410-87L00	310A-8
33634-96J00	322A-4
	322B-4
	322C-4
33799-97E00	340A-9
	340B-9
33810-90J21	322A-1
	322B-1
	322C-1
33833-87L00	322B-32
	322C-36
33925-92J00	326A-15
	326B-15
	326C-15
	326D-15

PART NO.	FIG.NO.-REF.NO.
	326E-15
	326F-15
	326G-10
	326H-15
	326J-15
33940-87LG0	326C-14
33940-87LH0	326D-14
33940-87LL0	326A-14
33940-87LM0	326B-14
33940-87LN0	326H-14
33940-87LP0	326J-14
33940-87LQ0	326E-14
33940-87LR0	326F-14
33940-87LS0	326G-9
34000-96L44	601A-1
	601B-1
34011-96L14	601A-2
	601B-2
34011-96L15	600A-1
34100-93J02	501A-3-1
	501B-3-1
34100-93J13	501A-3-2
	501B-3-2
34100-93J22	501A-3-3
	501B-3-3
34100-93J33	501A-3-4
	501B-3-4
34100-93J42	501A-3-5
	501B-3-5
34100-93J53	501A-3-6
	501B-3-6
34100-93J62	501A-3-7
	501B-3-7
34112-96L00	600A-2
	601A-3
	601B-3
34120-98J01	501A-23
	501B-23
34190-87D00	501A-22
	501B-22
34190-88L00	600A-6
	602A-7
	602B-4
34190-95500	501A-24
	501B-24
34191-92E00	501A-5
	501A-17
	501B-5
	501B-17
34193-96L00	600A-3

PART NO.	FIG.NO.-REF.NO.
	601A-4
	601B-4
34200-87L00	444A-45
	444B-76
	570A-44
34200-93J02	460A-5-1
	501A-20-1
	501B-20-1
34200-93J14	460A-5-2
	501A-20-2
	501B-20-2
34200-93J42	501A-29-1
34200-93J53	501A-29-2
34211-96L00	600A-4
	601A-5
	601B-5
34300-93J02	501A-10-1
	501B-10-1
34300-93J13	501A-10-2
	501B-10-2
34310-92E00	501A-11
	501B-11
34360-92E00	501A-12
	501B-12
34500-93J02	460A-3-1
	501A-14-1
	501B-14-1
34500-93J13	460A-3-2
	501A-14-2
	501B-14-2
34600-93J02	501A-8-1
	501B-8-1
34600-93J13	501A-8-2
	501B-8-2
34650-93J22	501A-16-1
	501B-16-1
34650-93J33	501A-16-2
	501B-16-2
34660-90J04	507A-1
34800-93J02	460A-1-1
	501A-1-1
	501B-1-1
34800-93J13	460A-1-2
	501A-1-2
	501B-1-2
34825-96L00	600A-5
	601A-6
	601B-6
34830-87J20	315A-5
	315B-5

PART NO.	FIG.NO.-REF.NO.
	315C-5
34840-98J11	315A-6
	315C-6
34841-87L10	315A-9
	315C-9
34842-87L01	315A-10
	315C-10
34843-87L00	315A-11
	315C-11
34845-87L10	315A-12
	315C-12
34846-87L00	315A-8
	315C-8
36001-88L00	602A-1
36360-87L00	444B-45
36610-87L90	322A-3
36610-87LA0	322C-3
36610-87LB1	322B-3
36611-87L00	322A-35
	322B-31
	322C-35
36611-87L10	322A-15
	322C-15
36612-96J00	322A-16
	322B-12
	322C-16
36615-96300	331A-4
	501A-7
	501B-7
	535A-18
	601A-8
	601B-8
36616-87L00	322A-20
	322B-16
	322C-20
36617-87L00	322A-25
	322B-21
	322C-25
36617-87L10	322A-27
	322B-23
	322C-27
36617-87L20	322A-28
	322B-24
	322C-28
36617-88L90	444A-46
	444B-46
	570A-45
36617-93J00	322A-26
	322B-22
	322C-26

PART NO.	FIG.NO.-REF.NO.
36618-43410	322A-14
	322B-11
	322C-14
36620-87L01	444A-5
	570A-4
36620-87L10	444B-5
36620-93J02	508A-53-1
	508B-53-1
	521B-2-1
36620-93J10	521A-1-1
36620-93J30	521A-2
36620-93J40	521A-1-2
36620-93J52	508A-53-2
	508B-53-2
	521B-2-2
36620-93J62	508A-53-3
	508B-53-3
	521B-2-3
36623-96L10	331A-3
	535A-17
36625-93J10	322A-37
	322C-37
36628-92E01	508A-2
	508B-2
36630-92E00	521B-5
36656-87L00	315A-18
	315C-18
36656-87L10	315B-7
36660-89L03	602B-1
36660-94480	521B-6
36661-96L30	601A-7
	601B-7
36662-88L00	600A-10
	602A-11
	602B-8
36662-88L10	600A-7
	602A-2
	602A-8
	602B-5
36662-88L20	600A-8
	602A-9
	602B-6
36662-88L30	600A-9
	602A-10
	602B-7
36662-96L10	331A-5
	535A-19
36663-88L00	600A-12
	602A-3
	602A-13

PART NO.	FIG.NO.-REF.NO.
	602B-10
36664-88L00	600A-15
	602A-4
	602A-16
	602B-13
36665-88L00	600A-13
	602A-5
	602A-14
	602B-11
36665-88L10	600A-14
	602A-6
	602A-15
	602B-12
36667-96L20	521A-5
	521B-8
	602A-17
	602B-14
36682-92E00	501A-31
	501B-29
	521B-7
	602B-16
36721-98L00	322A-7
	322C-7
36737-98L00	322A-6
	322C-6
36738-98L00	322A-8
	322C-8
36890-93J00	517A-23
36894-87D00	336A-2
	336A-3
	336B-2
	336B-3
	336C-2
	336C-3
	336D-2
	336D-3
	339A-15
36895-87D10	336A-4
	336B-4
	336C-4
	336D-4
	337A-27
	337B-27
36990-87D00	521A-4
	521B-4
	602A-18
	602B-15
37100-96J01	530A-1
37100-96J27	530A-19
37100-96L12	535A-1

PART NO.	FIG.NO.-REF.NO.
37105-96L11	535A-14
37110-87L02	444A-6
	444B-6
	570A-5
37110-93J02	530A-2
	530A-20
37110-93J12	508A-3
37110-96L10	508B-3
	535A-2
37112-88L91	444A-47
	444B-47
	570A-46
37114-96L10	535A-5
37117-96L00	331A-10
	535A-24
37139-96L40	535A-6
37139-99E00	530A-6
37139-99E40	530A-24
37141-99E00	444A-7-1
	444B-7-1
	508A-4-1
	508B-4-1
	530A-3-1
	530A-21-1
	535A-3-1
	570A-6-1
37141-99E10	444A-7-2
	444B-7-2
	508A-4-2
	508B-4-2
	530A-3-2
	530A-21-2
	535A-3-2
	570A-6-2
37141-99E20	444A-7-3
	444B-7-3
	508A-4-3
	508B-4-3
	530A-3-3
	530A-21-3
	535A-3-3
	570A-6-3
37141-99E30	444A-7-4
	444B-7-4
	508A-4-4
	508B-4-4
	530A-3-4
	530A-21-4
	535A-3-4
	570A-6-4

PART NO.	FIG.NO.-REF.NO.
37141-99E40	444A-7-5
	444B-7-5
	508A-4-5
	508B-4-5
	530A-3-5
	530A-21-5
	535A-3-5
	570A-6-5
37141-99E50	444A-7-6
	444B-7-6
	508A-4-6
	508B-4-6
	530A-3-6
	530A-21-6
	535A-3-6
	570A-6-6
37141-99E60	444A-7-7
	444B-7-7
	508A-4-7
	530A-3-7
	530A-21-7
	570A-6-7
37141-99E70	444A-7-8
	444B-7-8
	508A-4-8
	530A-3-8
	530A-21-8
	570A-6-8
37141-99E80	444A-7-9
	444B-7-9
	508A-4-9
	530A-3-9
	530A-21-9
	570A-6-9
37141-99E90	444A-7-10
	444B-7-10
	508A-4-10
	530A-3-10
	530A-21-10
	570A-6-10
37141-99EA0	444A-7-11
	444B-7-11
	508A-4-11
	530A-3-11
	530A-21-11
	570A-6-11
37141-99EB0	444A-7-12
	444B-7-12
	508A-4-12
	530A-3-12

PART NO.	FIG.NO.-REF.NO.
	530A-21-12
	570A-6-12
37143-96L00	508B-5
	535A-4
37143-99E01	444A-8
	444B-8
	508A-5
	530A-4
	530A-22
	570A-7
37149-93J00	444A-9
	444B-9
	508A-6
	530A-5
	530A-23
	570A-8
37170-96L04	535A-23
37171-96L02	331A-11
	535A-25
37172-96L01	331A-12
	535A-26
37173-96L00	535A-13
37173-96L10	331A-6
	535A-20
37210-93J00	530A-17
37212-93J00	530A-18
37721-88L01	545A-11
37721-93J00	326A-1
	326B-1
	326C-1
	326D-1
	326E-1
	326F-1
	326G-1
	326H-1
	326J-1
37721-93J91	508A-7
	508B-6
37721-95500	518A-12
37726-87L00	326A-4
	326B-4
	326C-4
	326D-4
	326E-4
	326F-4
	326G-4
	326H-4
	326J-4
37726-90J10	326A-3
	326B-3

PART NO.	FIG.NO.-REF.NO.
	326C-3
	326D-3
	326E-3
	326F-3
	326G-3
	326H-3
	326J-3
37803-93J06	530A-9
37805-93J00	530A-15
37820-87L11	444A-10
	444B-10
	570A-9
37820-93J11	508A-8
	508B-7
	530A-10
	530A-25
	535A-7
37820-99E02	315A-14
	315B-6
	315C-14
37823-92E02	444A-11
	444B-11
	508A-9
	508B-8
	530A-11
	530A-26
	535A-8
	570A-10
37825-99E10	530A-13
37826-92J10	444A-12
	444B-12
	508A-10
	508B-9
	530A-12
	530A-27
	535A-9
	570A-11
37835-91J00-YAY	444A-48
	444B-48
	570A-47
37850-87L01	444A-14
	570A-13
37850-88L00	544A-4
37850-92E27	517A-5
37850-92J00	326A-6
	326B-6
	326C-6
	326D-6
	326E-6
	326F-6

PART NO.	FIG.NO.-REF.NO.
	326H-6
	326J-6
37850-96L00	508A-11
	508B-10
37851-88L90	444A-49
	444B-49
	570A-48
37852-87J00	444A-15
	444B-15
	570A-14
37852-88L90	444A-50
	570A-49
37853-88L90	444A-35
	444B-35
	570A-34
37854-88L90	444A-59
	444B-57
	570A-74
37855-88L90	444A-58
	444B-56
	570A-73
37855-99E00	530A-16
37856-92J00	326A-7
	326B-7
	326C-7
	326D-7
	326E-7
	326F-7
	326H-7
	326J-7
37857-92J01	326A-8
	326B-8
	326C-8
	326D-8
	326E-8
	326F-8
	326H-8
	326J-8
37860-87L00	530A-31
37861-87L11	444A-51
	444B-77
	570A-50
37862-87L00	530A-32
37864-88L91	444A-52
	444B-78
	570A-51
38100-87L12	337A-9
	337B-9
	340A-1
	340B-1

PART NO.	FIG.NO.-REF.NO.
38410-93J21	326A-11
	326B-11
	326C-11
	326D-11
	326E-11
	326F-11
	326H-11
	326J-11
38415-93J20	326A-12
	326B-12
	326C-12
	326D-12
	326E-12
	326F-12
	326H-12
	326J-12
38500-93J00	521A-3
	521B-1
38500-93J90	331A-7
	444A-13
	444B-13
	508A-12
	508B-11
	530A-7
	530A-29
	535A-10
	535A-21
	570A-12
38860-76F01	322A-9
	322A-10
	322B-6
	322B-7
	322C-9
	322C-10
38860-96L01	331A-8
	535A-22
39950-88L02	600A-11
	602A-12
	602B-9
40000	
41111-87L10-Y5S	335A-1-2
41111-87L10-YAY	335A-1-1
	335B-1
41111-87L30-YAY	335C-1
41121-87L11-Y5S	335A-2-2

PART NO.	FIG.NO.-REF.NO.
41121-87L11-YAY	335A-2-1
	335B-2
41121-87L30-YAY	335C-2
41130-87L11	335A-3
	335B-3
	335C-3
41135-93J11	335A-4
	335B-4
	335C-4
41161-94400	442A-1
	442B-2
41220-87L00	336D-16
41220-93J11	336A-21
	336B-21
	336C-17
41221-95E40	336D-17
41224-95E01	336A-22
	336B-22
	336C-18
	336D-18
41225-94400	336D-19
41228-90J00	336D-20
41230-87L00	336A-23
	336B-23
	336C-19
41230-95E00	336D-21
41233-95E10	336A-24
	336B-24
	336C-20
	336D-22
41234-93J11	336A-25
	336B-25
	336C-21
43111-87L20-Y5S	336A-5-2
43111-87L20-YAY	336A-5-1
	336B-5
	336C-5
43111-87L30-YAY	336D-5
43211-87L00	336D-6
43211-93J11	336A-6
	336B-6
	336C-6
43241-87J00	335C-18
43411-87L00	336D-28
43415-87L00	336D-29
43420-87L00	336D-30
43427-87L00	336D-31
43510-87L00	336D-32
43512-87L00	336D-33
43516-87L00	336D-34

PART NO.	FIG.NO.-REF.NO.
43711-97E11	336A-7
	336B-7
	336C-7
	336D-7
43750-87L20-Y5S	336A-8-2
43750-87L20-YAY	336A-8-1
	336B-8
	336C-8
43750-87L30-YAY	336D-8
43755-87L00	336A-17
	336B-17
43761-87L00-YAY	444B-1
43761-88L01-YAY	444A-1
	570A-58
43762-88L00	444A-77
	444B-73
	570A-59
43768-88L00	444A-78
	444B-74
	570A-60
43770-99E03	444A-75
	570A-70
43776-87L00	444A-73
	570A-61
45255-93001	336D-35
	339A-14
45260-87L00	339A-1
45421-87D03	335C-14
47400-87L00	339A-3
48000-87L14	337A-1
	337B-1
48120-87L00	339A-4
48121-90J00	337A-25
	337B-25
48321-90J00	337A-19
	337B-19
	339A-5
48325-87L00	337A-21
	337B-21
	339A-6
48326-95E00	337A-20
	337B-20
	339A-2
48400-87L03	337A-2
	337B-2
48502-87L02	337A-10
	337B-10
48557-90J00	337A-6
	337B-6
48571-87L01	337A-4

PART NO.	FIG.NO.-REF.NO.
	337B-4
48572-87L00	337A-5
	337B-5
48582-95E01	337A-11
	337B-11
48583-95E00	337A-12
	337B-12
48585-95E00	337A-13
	337B-13
48588-90J00	337A-15
	337B-15
48611-87L00	337A-3
	337B-3
48862-87J20	337A-7
	337B-7
48862-90J21	337A-18
	337B-18
48862-92J20	337A-16
	337B-16
48862-92J30	337A-17
	337B-17
48864-96J10	337A-14
	337B-14
50000	
51111-87L00-Y5S	401A-1-2
51111-87L00-YAY	401A-1-1
	401B-1
51115-87L00	401A-2
	401B-2
51117-87L00	401A-3
	401B-3
51122-87L00	401A-20
	401B-20
51123-87L00	401A-21
	401B-21
	585A-9
	585B-9
51211-87L10	401A-4
	401B-4
	585A-10
	585B-10
52111-87L00-Y5S	405A-1-2
52111-87L00-YAY	405A-1-1
	405B-1

PART NO.	FIG.NO.-REF.NO.
	405C-1
	405D-1
52131-87L00-Y5S	405A-4-2
52131-87L00-YAY	405A-4-1
	405B-4
	405D-4
52331-87L00	585A-11
	585B-11
52332-87L10	407A-11
	407B-11
	407C-11
	407D-11
54114-90J10	405A-17
	405B-17
	405C-9
	405D-17
54120-87L11	401A-23
	401B-23
54122-87L01	401A-24
	401B-24
54130-87L00	401A-25
	401B-25
54137-87L00	401A-29
	401B-29
54140-87L10	401A-32
	401B-32
54151-87L01	405A-12
	405B-12
	405C-4
	405D-12
54160-87L10	405A-13
	405B-13
	405C-5
	405D-13
54166-95J02	401A-26
	401B-26
	405A-14
	405B-14
	405C-6
	405D-14
54167-87L10	405A-16
	405B-16
	405C-8
	405D-16
54180-88L01	405A-22
	405B-22
	405C-14
	405D-22
54211-90J01-Y5S	405A-18-2
54211-90J01-YAY	405A-18-1

PART NO.	FIG.NO.-REF.NO.
	405B-18
	405C-10
	405D-18
54221-87L00-Y5S	405A-19-2
54221-87L00-YAY	405A-19-1
	405B-19
	405C-11
	405D-19
54231-87L00-Y5S	405A-20-2
54231-87L00-YAY	405A-20-1
	405B-20
	405C-12
	405D-20
55110-87L32-Y5S	407A-1-2
55110-87L32-YAY	407A-1-1
	407B-1
	407C-1
	407D-1
55110-87L40-YAY	407E-1
55125-90J01	407A-4
	407B-4
	407C-4
	407D-4
	407E-4
55127-87D00	143A-36
	143B-36
	407A-12
	407B-12
	407C-12
	407D-12
	407E-12
	501A-26
	501B-26
55320-94900	335A-8
	335B-8
	335C-8
55321-87J01	111A-7
	111B-7
	140A-6
	337A-23
	337B-23
	339A-8
	407A-8-1
	407B-8-1
	407C-8-1
	407D-8-1
55321-87J11	407A-8-2
	407B-8-2
	407C-8-2
	407D-8-2

PART NO.	FIG.NO.-REF.NO.
	407E-8-2
55321-93J01	405A-10
	405B-10
	405D-10
	407E-8-1
55321-94910	335A-5
	335B-5
	335C-5
55332-87L00	407E-11
55333-87L00	407A-10
	407B-10
	407C-10
	407D-10
55333-87L10	407E-10
56120-87L30-Y5S	220A-24-2
56120-87L30-YAY	220A-24-1
	220B-24
	220C-24
	220D-24
	220E-24
56130-87L01	220A-30
	220B-30
	220C-30
	220D-30
	220E-30
57110-87L21	220A-1-1
	220B-1-1
	220C-1
	220D-1-1
	220E-1-1
57110-87L31	220A-1-2
	220B-1-2
	220D-1-2
	220E-1-2
57130-87E02	405A-9
	405B-9
	405D-9
57133-87L01	220A-2
	220B-2
	220C-2
	220D-2
	220E-2
57134-87L00	220A-34
	220B-34
	220C-34
	220D-34
	220E-34
57135-87L00	220A-35
	220B-35
	220C-35

PART NO.	FIG.NO.-REF.NO.
	220D-35
	220E-35
57300-87890	220A-5
	220B-5
	220C-5
	220D-5
	220E-5
57500-87873	220A-8
	220B-8
	220C-8
	220D-8
	220E-8
57500-87882	220A-13
	220B-13
	220C-13
	220D-13
	220E-13
57610-87L00	220A-15
	220B-15
	220C-15
	220D-15
	220E-15
57621-87L10	220A-16
	220B-16
	220C-16
	220D-16
	220E-16
57630-90J00	407A-27
	407B-27
	407C-25
	407D-27
	407E-30
57631-87L00	220A-17
	220B-17
	220C-17
	220D-17
	220E-17
57632-87L01	407A-22
	407B-22
	407C-20
	407D-22
	407E-22
57633-90J02	407A-23
	407B-23
	407C-21
	407D-23
	407E-23
58100-87LA0-019	407A-20-1
	407B-20-1
	407C-18-1

PART NO.	FIG.NO.-REF.NO.
	407D-20-1
	407E-20-1
58100-87LB0-019	407A-20-2
	407B-20-2
	407C-18-2
	407D-20-2
	407E-20-2
58100-87LC0-019	407A-20-3
	407B-20-3
	407C-18-3
	407D-20-3
	407E-20-3
58100-87LD0-019	407A-20-4
	407B-20-4
	407C-18-4
	407D-20-4
	407E-20-4
58100-87LE0-019	407A-20-5
	407B-20-5
	407C-18-5
	407D-20-5
	407E-20-5
58100-87LF0-019	407A-20-6
	407B-20-6
	407C-18-6
	407D-20-6
	407E-20-6
58100-90JA0-019	407A-20-7
	407B-20-7
	407C-18-7
	407D-20-7
	407E-20-7
58100-90JB0-019	407A-20-8
	407B-20-8
	407C-18-8
	407D-20-8
	407E-20-8
58100-90JC0-019	407A-20-9
	407B-20-9
	407C-18-9
	407D-20-9
	407E-20-9
58100-90JD0-019	407A-20-10
	407B-20-10
	407C-18-10
	407D-20-10
	407E-20-10
58100-90JE0-019	407A-20-11
	407B-20-11
	407C-18-11

PART NO.	FIG.NO.-REF.NO.
	407D-20-11
	407E-20-11
58105-90J00	407A-21
	407B-21
	407C-19
	407D-21
	407E-21
58200-92J40	407A-20-12
	407B-20-12
	407C-18-12
	407D-20-12
	407E-20-12
58200-92J50	407A-20-13
	407B-20-13
	407C-18-13
	407D-20-13
	407E-20-13
58200-92J60	407A-20-14
	407B-20-14
	407C-18-14
	407D-20-14
	407E-20-14
58200-92J70	407A-20-15
	407B-20-15
	407C-18-15
	407D-20-15
	407E-20-15
58200-92J80	407A-20-16
	407B-20-16
	407C-18-16
	407D-20-16
	407E-20-16
58200-92J90	407A-20-17
	407B-20-17
	407C-18-17
	407D-20-17
	407E-20-17
60000	
61112-99E01	410A-1
	410B-1
	410C-1
	410D-1
61124-87L20	410A-29

PART NO.	FIG.NO.-REF.NO.
	410B-29
	410C-29
	410D-29
61134-87L01	410A-2
	410B-2
	410C-2
	410D-2
61401-87Y01-YAY	420A-1-1
	420B-1-1
	420C-1
	420D-1
	420E-1
	420F-1
	420G-1-1
	420H-1-1
	420J-1
	420K-1
	420M-1-1
	420N-1-1
61401-87Y11-Y5S	420A-1-2
	420B-1-2
	420G-1-2
	420H-1-2
	420M-1-2
	420N-1-2
61401-87Y40-YAY	420L-1
61422-87L90	420M-14-2
	420N-14-2
61422-90J40	420M-14-1
	420N-14-1
61431-87L21-Y5S	420A-2-2
	420B-2-2
	420G-2-2
	420H-2-2
	420M-2-2
	420N-2-2
61431-87L21-YAY	420A-2-1
	420B-2-1
	420C-2
	420D-2
	420E-2
	420F-2
	420G-2-1
	420H-2-1
	420J-2
	420K-2
	420L-2
	420M-2-1
	420N-2-1
61435-87LB0	420A-14-1

PART NO.	FIG.NO.-REF.NO.	PART NO.	FIG.NO.-REF.NO.	PART NO.	FIG.NO.-REF.NO.
	420B-14-1		420E-10		420H-6
	420C-14		420F-10		420J-6
	420D-14		420G-10-1		420K-6
61435-87LC0	420E-14		420H-10-1		420L-6
	420F-14		420J-10		420M-6
61435-87LD0	420G-14-1		420K-10		420N-6
	420H-14-1		420L-10	61621-87L00	420A-12
	420J-14		420M-10-1		420B-12
	420K-14		420N-10-1		420C-12
	420L-14	61453-88L30	420A-10-2		420D-12
61435-87LE0	420A-14-2		420B-10-2		420E-12
	420B-14-2		420G-10-2		420F-12
61435-87LF0	420G-14-2		420H-10-2		420G-12
	420H-14-2		420M-10-2		420H-12
61439-87L00	420A-3		420N-10-2		420J-12
	420B-3	61458-90J01	420A-15		420K-12
	420C-3		420B-15		420L-12
	420D-3		420C-15		420M-12
	420E-3		420D-15		420N-12
	420F-3		420E-15	61632-93J00	410A-17
	420G-3		420F-15		410B-17
	420H-3		420G-15		410C-17
	420J-3		420H-15		410D-17
	420K-3		420J-15	61633-87L00	410A-20
	420L-3		420K-15		410B-20
	420M-3		420L-15		410C-20
	420N-3		420M-15		410D-20
61443-88L20	420A-9-1		420N-15	61641-87L00	410A-18
	420B-9-1	61472-88L01	136A-6		410B-18
	420C-9	61476-87L00	420A-5		410C-18
	420D-9		420B-5		410D-18
	420E-9		420C-5	61645-87L00	410A-21
	420F-9		420D-5		410B-21
	420G-9-1		420E-5		410C-21
	420H-9-1		420F-5		410D-21
	420J-9		420G-5	61673-93J11	410A-22
	420K-9		420H-5		410B-22
	420L-9		420J-5		410C-22
	420M-9-1		420K-5		410D-22
	420N-9-1		420L-5	61811-87L20-Y5S	410A-3-2
61443-88L30	420A-9-2		420M-5	61811-87L20-YAY	410A-3-1
	420B-9-2		420N-5		410B-3
	420G-9-2	61494-87L02	136A-8		410C-3
	420H-9-2	61610-93J00	420A-6		410D-3
	420M-9-2		420B-6	61821-87L21-Y5S	410A-4-2
	420N-9-2		420C-6	61821-87L21-YAY	410A-4-1
61453-88L20	420A-10-1		420D-6		410B-4
	420B-10-1		420E-6		410D-4
	420C-10		420F-6	61821-87L30-YAY	410C-4
	420D-10		420G-6	61827-87L00	410A-9

PART NO.	FIG.NO.-REF.NO.	PART NO.	FIG.NO.-REF.NO.	PART NO.	FIG.NO.-REF.NO.
	410B-9	63246-88L00	444A-23		570A-43
	410C-9		444B-23	63612-88L10	444A-55
	410D-9		570A-22		444B-53
61831-87L20-Y5S	410A-11-2	63247-99J00	444A-63		570A-54
61831-87L20-YAY	410A-11-1		444B-61	63626-88L00	444A-36
	410B-11		570A-78		444B-36
	410C-11	63248-99J00	444A-31		570A-35
	410D-11		444B-31	65000-94L10	432A-1
63002-87L17-YAY	570A-1		570A-30	65520-99100	432A-2
63110-87L15-YAY	444A-2	63250-88L00	444A-24	65561-95D00	432A-3
63110-87L20-YAY	444B-2		444B-24	65700-90J23	432A-6
63111-88L00-YAY	444A-64		570A-23	65740-95D01	432A-4
	444B-62	63251-87J00	444A-25	65750-95501	432A-7
	570A-79		444B-25	65770-90J12	432A-8
63115-88L01	444A-69		570A-24	67200-88L01	544A-1
	444B-67	63251-88L90	444A-57		545A-1
	570A-66		444B-55	67200-93J34	517A-1
63121-88L10	444A-16		570A-72		518A-1
	444B-16	63258-88L00	444A-60	67200-93J61	508A-1
	570A-15		444B-58	67200-96L11	508B-1
63132-88L00	444A-76		570A-75	67211-88L00	544A-17
	444B-72	63260-88L00	444A-26	67211-92E50	517A-29
	570A-71		444B-26	67212-88L00	544A-7
63210-88L00	444A-17		570A-25	67212-95600	508A-13
	444B-17	63261-87J00	444A-32		508B-12
	570A-16		444B-32	67220-95630	508A-15
63215-93110	444A-72		570A-31		508B-14
	444B-70	63262-87J00	444A-29	67221-92E00	545A-8
	570A-68		444B-29	67221-92E50	518A-7
63221-88L00	444A-18		570A-28	67222-92E00	545A-2
	444B-18	63271-87J00	444A-30	67222-92E50	518A-2
	570A-17		444B-30	67223-92E00	545A-3
63223-92D00	444A-19		570A-29	67223-92E50	518A-6
	444B-19	63272-87J00	444A-27	67223-99E10	508A-16
	570A-18		444B-27		508B-15
63225-88L00	444A-20		570A-26	67224-92E00	545A-9
	444B-20	63273-87J00	444A-28	67224-92E50	518A-8
	570A-19		444B-28	67224-96L00	508A-50
63227-93200	444A-21		570A-27		508B-49
	444B-21	63274-87J00	444A-33	67225-92E00	518A-25
	570A-20		444B-33	67225-92E50	518A-9
63235-88L00	444A-22		570A-32	67226-92E00	545A-15
	444B-22	63610-87J00	444A-34	67226-92E10	518A-14
	570A-21		444B-34		545A-16
63244-99J00	444A-53		570A-33	67227-92E00	518A-23
	444B-51	63611-88L00	444A-43		545A-24
	570A-52		444B-43	67228-92E00	518A-17
63245-99J00	444A-54		570A-42		545A-18
	444B-52	63612-87J00	444A-44	67229-95600	508A-17
	570A-53		444B-44		508B-16

PART NO.	FIG.NO.-REF.NO.	PART NO.	FIG.NO.-REF.NO.	PART NO.	FIG.NO.-REF.NO.
67230-88L00	545A-20		508B-23		508B-36
67230-92E00	518A-19	67252-88L00	545A-39		517A-25
67231-88L00	545A-32	67252-92E00	518A-35		544A-15
67231-92E00	518A-40	67252-92E10	518A-38	67274-88L00	545A-42
67232-88L00	545A-33	67252-95600	508A-25	67274-92E50	517A-28
67232-92E50	518A-43		508B-24	67275-95600	508A-38
67232-95600	508A-18	67253-88L00	545A-40		508B-37
	508B-17	67253-92E00	544A-13		517A-24
	518A-41	67253-92E10	518A-37		544A-14
67233-92E00	518A-27	67253-95600	508A-26	67281-88L00	544A-10
	545A-26		508B-25	67283-92E50	517A-26
67234-88L00	545A-22		518A-39	67284-92E50	517A-27
67234-92E00	518A-21	67254-92E50	517A-22	67284-94L10	508A-52
67235-92E00	518A-28	67255-92E50	517A-8		508B-51
	545A-27	67255-96L00	508A-27	67285-96L00	508B-52
67236-92E00	518A-30		508B-26	67286-92E00	518A-18
	545A-12	67256-92E50	517A-11		545A-19
67237-92E01	518A-31	67256-95600	508A-28	67287-92E00	545A-46
	545A-28		508B-27	67287-92E50	517A-19
67238-87D00	508A-19	67257-88L00	544A-9	67288-92E00	545A-4
	508B-18	67257-92E00	517A-12	67288-92E10	518A-4
67238-88L00	545A-31	67257-96L00	508A-29	67288-92E20	517A-14
67238-92E50	518A-32		508B-28		544A-6
67238-96L00	508A-51	67258-99E00	508A-31	67288-92E60	517A-6
	508B-50		508B-30		544A-12
67239-92E00	518A-33	67259-87D00	508A-32	67288-92E70	517A-16
	545A-35		508B-31	67288-94320	508A-49
67239-92E10	518A-29	67261-88L00	544A-3		508B-48
	545A-41	67261-88L10	544A-2	67291-92E00	518A-5
67240-92E00	545A-17	67261-92E50	517A-10		545A-7
67240-92E50	518A-16	67261-96L00	508A-33	67291-92E10	518A-36
67241-88L00	545A-34		508B-32		545A-37
67241-92E50	518A-42	67263-88L00	444B-14	67292-87J00	444A-37
67241-99E11	508A-20		444B-50		444B-37
	508B-19	67264-88L00	544A-18		570A-36
67242-92E50	517A-13	67264-88L10	544A-19	67292-94300	508A-39
67243-92E00	545A-38	67264-95600	508A-35		508B-38
67243-95600	508A-21		508B-34		518A-3
	508B-20	67267-96L00	508A-36		545A-5
67244-95600	508A-22		508B-35	67294-92E00	518A-11
	508B-21	67269-92E01	545A-29	67294-95600	508A-40
67245-92E00	518A-22	67269-96L10	508A-47		508B-39
	545A-23		508B-46	67295-92E10	517A-4
67245-95600	508A-23	67271-88L10	544A-16	67295-92E50	517A-18
	508B-22	67272-88L00	545A-6	67296-88D10	517A-15
67246-88L00	545A-36	67273-88L00	519A-5		518A-24
67246-92E50	518A-34		519B-5		545A-13
67251-88L00	544A-20		544A-25		545A-30
67251-92E50	517A-9		545A-47	67296-88D20	517A-17
67251-96L00	508A-24	67273-95601	508A-37	67296-88D30	517A-21

PART NO.	FIG.NO.-REF.NO.	PART NO.	FIG.NO.-REF.NO.	PART NO.	FIG.NO.-REF.NO.
67296-88L00	544A-5		544A-21		420B-17
67296-90J20	508A-41	67700-87L01	442B-1		420C-17
	508B-40	67701-87L01	442A-2		420D-17
67296-92E11	508A-14		442B-3		420E-17-2
	508B-13	67721-87L00	442A-3		420F-17
	518A-13		442B-4		420G-17-2
67296-92E20	518A-15	67725-99E20	442A-4		420H-17
	545A-14		442B-5		420J-17
67296-92E30	545A-44	67726-99E00	442A-5		420K-17
67296-92E60	544A-11		442B-6		420M-17-2
67296-94310	517A-3	67728-99E00	442A-6		420N-17
67296-95610	508A-44		442B-7	99011-87L90-059	420L-17
	508B-43	68111-87L00	420A-11		
	545A-43		420B-11		
67296-95630	508A-43		420C-11		
	508B-42		420D-11		
67296-96L00	508A-42		420E-11		
	508B-41		420F-11	00000	
67296-96L10	508A-34		420G-11		
	508B-33		420H-11		
67297-95600	508A-45		420J-11	01421-08257	122A-4
	508B-44		420K-11	01550-06127	322A-24
67298-92E50	517A-2		420L-11		322B-20
67300-98J10	410B-41		420M-11		322C-24
	410C-41		420N-11		326A-13
67341-87L00	410A-31	68111-88L00	544A-8		326B-13
	410B-31	69711-93E11	136A-7		326C-13
	410C-31				326D-13
	410D-31				326E-13
67345-87L00	410A-33				326F-13
	410B-33				326H-13
	410C-33				326J-13
	410D-33	70000		01550-0612A	121A-6
67346-87L01	410A-34				121B-6
	410B-34				121C-6
	410C-34	77811-54GB0-0PG	508A-30	01550-0612C	113A-13
	410D-34		508B-29		143A-35
67350-87L02	410A-36				143B-35
	410B-36				146A-18
	410C-36				146B-19
	410D-36				180A-20
67361-90J10	410A-41				180B-20
	410B-42	90000			303A-11
	410C-42				322A-32
	410D-41				322B-28
67467-89J01	204B-24	99011-87L80-054	420A-17-1		322C-32
	442A-7		420E-17-1		326A-5
	442B-8		420G-17-1		326B-5
67500-88L00	519A-1		420M-17-1		326C-5
	519B-1	99011-87L80-059	420A-17-2		326D-5

PART NO.	FIG.NO.-REF.NO.	PART NO.	FIG.NO.-REF.NO.	PART NO.	FIG.NO.-REF.NO.
	326E-5		146A-2	02112-34167	122A-9
	326F-5		146B-2	02142-0408B	143A-24
	326G-5		310A-2	02142-06167	322A-23
	326H-5		310A-5		322B-19
	326J-5	01550-06307	140A-3		322C-23
	420A-8	01550-0630C	136A-2	02162-05207	315A-4
	420B-8		162A-7		315B-4
	420C-8		162B-7		315C-4
	420D-8	01550-06357	163A-16	03112-0630B	501A-25
	420E-8		163B-16		501B-25
	420F-8	01550-0640C	204A-11	03121-0516A	530A-28
	420G-8		204B-11	03122-05165	530A-14
	420H-8		204C-11		535A-12
	420J-8	01550-0645C	111A-20	03522-05169	444A-62
	420K-8		111B-20		444B-60
	420L-8	01550-0650C	163A-5		570A-77
	420M-8		163B-5	03542-06209	136A-4
	420N-8	01550-0655C	163A-7	04211-11129	401A-8
01550-0616A	175A-7		163B-7		401A-9
01550-0616C	146A-9	01550-08207	301A-19		401B-8
	146B-10	01550-0820C	111A-9		401B-9
	163A-6		111B-9	04211-13189	111A-13
	163B-6		113A-2		111B-13
	301A-18		140A-8	04221-04089	116A-6
	303A-9		410A-10	04221-05109	121A-7
	410A-32		410B-10		121B-7
	410B-32		410C-10		121C-7
	410C-32		410D-10	06111-07004	220A-21
	410D-32	01550-0825A	119A-6		220B-21
	420A-4		401A-22		220C-21
	420B-4		401B-22		220D-21
	420C-4	01550-0825C	144A-12		220E-21
	420D-4		144B-12	06111-11004	220A-22
	420E-4	01550-08307	175A-13		220B-22
	420F-4	01550-0830C	122A-5		220C-22
	420G-4		163A-17		220D-22
	420H-4		163B-17		220E-22
	420J-4	01550-0835A	119A-9	08113-60087	220A-28
	420K-4	01550-0835C	301A-20		220B-28
	420L-4	01550-08407	111A-12		220C-28
	420M-4		111B-12		220D-28
	420N-4		113A-10		220E-28
01550-0620A	119A-12	01550-0845C	122A-6	08310-00067	322A-17
01550-0620C	111A-28	01570-06127	410A-38		322B-13
	111B-28		410B-38		322C-17
	310A-9		410C-38	08316-10087	146B-21
	401A-15		410D-38		322A-2
	401B-15	02112-0408A	143A-15		322B-2
01550-0625C	111A-19	02112-0612A	111A-22		322C-2
	111B-19		111B-22	08316-1008C	122A-7

PART NO.	FIG.NO.-REF.NO.	PART NO.	FIG.NO.-REF.NO.	PART NO.	FIG.NO.-REF.NO.
08321-01067	322A-18		405B-5		570A-62
	322B-14		405D-5	09116-08159	401A-6
	322C-18	09108-10156	336A-18		401B-6
08331-41359	204A-23		336B-18	09116-08174	410A-12
	204B-23	09108-10157	405A-6		410B-12
	204C-23		405B-6		410C-12
08332-1107A	206A-4		405D-6		410D-12
	206B-4	09116-05010	204A-12	09116-10129	180A-15
	206C-4		204B-12		180B-15
09100-06182	336D-36		204C-12	09116-10137	407A-16
09100-06183	336D-38	09116-06121	162A-8		407B-16
09100-06184	339A-9		162B-8		407C-16
09100-08232	508A-46		180A-7		407D-16
	508B-45		180B-7		407E-16
09100-12090	335A-10-2		335A-9	09116-10147	401A-31
	335B-10-2		335B-9		401B-31
	335C-10-2		335C-9	09116-10150	407A-17
09100-12091	335A-10-1	09116-06127	410A-19		407B-17
	335B-10-1		410B-19		407C-17
09100-12127	335C-10-1		410C-19		407D-17
09103-05026	410A-27		410D-19		407E-17
	410B-27	09116-06202	310A-4		444A-74
	410C-27	09116-06215	134A-4		444B-71
	410D-27	09116-06217	143A-28		570A-69
09103-05027	410A-28		143B-28	09116-10179	337A-26
	410B-28	09116-06236	405A-11		337B-26
	410C-28		405B-11		339A-10
	410D-28		405D-11	09116-10181	180A-16
09103-06093	315A-13		407E-9		180B-16
	315C-13	09116-08122	220A-29		401A-30
09103-06211	303A-12		220B-29		401B-30
09103-06220	175A-2		220C-29		405A-2
09103-06266	111A-2		220D-29		405A-21
	111B-2		220E-29		405B-2
09103-06281	111A-8	09116-08128	180A-10		405B-21
	111B-8		180B-10		405C-2
	140A-7		401A-5		405C-13
	144A-6		401B-5		405D-2
	144B-6	09116-08137	335A-6		405D-21
	337A-24		335B-6	09117-08110	220A-33
	337B-24		335C-6		220B-33
	339A-11		401A-33		220C-33
	407A-9		401B-33		220D-33
	407B-9		407A-5		220E-33
	407C-9		407B-5	09125-04004	518A-26
	407D-9		407C-5	09125-04021	517A-7
09103-16004	303A-2		407D-5	09125-05042	518A-20
09106-05030	303A-7		407E-5		545A-21
09106-10065	335C-16		444A-65	09125-05046	315A-7
09108-10115	405A-5		444B-63		315C-7

PART NO.	FIG.NO.-REF.NO.	PART NO.	FIG.NO.-REF.NO.	PART NO.	FIG.NO.-REF.NO.
09125-05047	444A-42		410B-7		405B-15
	444B-42		410C-7		405C-7
	570A-41		410D-7		405D-15
09125-05050	337A-28	09137-04004	326A-2		444A-66
	337B-28		326B-2		444B-64
09125-05135	519A-2		326C-2		570A-63
	519B-2		326D-2	09159-14020	335C-15
	544A-22		326E-2	09159-22006	335A-7
09125-06063	336A-9		326F-2		335B-7
	336A-10		326G-2		335C-7
	336A-11		326H-2	09160-05024	545A-45
	336A-26		326J-2	09160-05029	519A-3
	336B-9	09140-05005	163A-13		519B-3
	336B-10		163B-13		544A-23
	336B-11		519A-4	09160-06046	163A-14
	336B-26		519B-4		163B-14
	336C-9		544A-24	09160-06055	204B-25
	336C-10	09140-06020	339A-12		442A-9
	336C-11		508A-48		442B-10
	336C-22		508B-47	09160-06082	336A-28
	336D-9		518A-10		336B-28
	336D-10		545A-10		336C-24
	336D-11	09140-10031	407A-18		336D-25
	336D-23		407B-18	09160-06084	163A-8
	339A-16		407D-18		163B-8
09125-06124	407E-29		407E-18	09160-06094	336D-37
09126-06006	545A-25	09140-10032	336A-27	09160-06104	517A-20
09126-06015	444A-38		336B-27	09160-06173	336D-42
	444B-38		336C-23	09160-06174	336D-43
	570A-37		336D-24	09160-09019	204A-8
09131-05004	530A-33	09140-14024	220A-10		204A-14
09132-04034	160A-15		220B-10		204B-8
	160B-15		220C-10		204B-14
	160C-15		220D-10		204C-8
	160D-15		220E-10		204C-14
	160E-15	09141-18005	407A-24	09160-10082	335C-17
	160F-15		407B-24	09160-10141	336A-20
	160G-15		407C-22		336B-20
	160H-15		407D-24		407A-19
	160J-15		407E-24		407B-19
	160K-15	09159-06079	336D-39		407D-19
09136-06148	410A-5	09159-10050	336A-19		407E-19
	410B-5		336B-19	09160-10161	339A-7
	410C-5	09159-10232	336D-41	09160-12066	444A-67
	410D-5	09159-12014	335A-11		444B-65
09136-06149	410A-6		335B-11		570A-64
	410B-6		335C-11	09160-12110	335A-12
	410C-6		401A-27		335B-12
	410D-6		401B-27		335C-12
09136-06161	410A-7		405A-15		401A-28

PART NO.	FIG.NO.-REF.NO.	PART NO.	FIG.NO.-REF.NO.	PART NO.	FIG.NO.-REF.NO.
	401B-28		407B-7	09181-25130	220A-11-1
09160-12124	444A-68		407C-7		220B-11-1
	444B-66		407D-7		220C-11-1
	570A-65		407E-7		220D-11-1
09160-12128	335A-13	09168-12012	180A-13		220E-11-1
	335B-13		180B-13	09181-25139	220A-11-2
	335C-13	09168-16002	175A-4		220B-11-2
09160-13014	410A-23	09169-06053	322A-21		220C-11-2
	410B-23		322B-17		220D-11-2
	410C-23		322C-21		220E-11-2
	410D-23	09169-06062	111A-29	09181-25143	220A-11-3
09160-16047	303A-3		111B-29		220B-11-3
09160-18028	407A-26		310A-6		220C-11-3
	407B-26	09169-06075	134A-5		220D-11-3
	407C-24	09169-06090	143A-29		220E-11-3
	407D-26		143B-29	09181-25149	220A-11-4
	407E-26	09169-08050	410A-13		220B-11-4
09160-18031	401A-10		410B-13		220C-11-4
	401B-10		410C-13		220D-11-4
09160-39001	336A-12		410D-13		220E-11-4
	336B-12	09169-28003	336A-13	09181-25153	220A-11-5
	336C-12		336B-13		220B-11-5
	336D-12		336C-13		220C-11-5
09161-10013	336D-40	09180-06186	163A-15		220D-11-5
09161-16008	160A-12		163B-15		220E-11-5
	160B-12	09181-25030	220A-23	09181-31001	220A-37
	160C-12		220B-23		220B-37
	160D-12		220C-23		220C-37
	160E-12		220D-23		220D-37
	160F-12		220E-23		220E-37
	160G-12	09181-25072	220A-11-6	09181-39001	336A-14
	160H-12		220B-11-6		336B-14
	160J-12		220C-11-6		336C-14
	160K-12		220D-11-6		336D-13
09163-06001	444A-39		220E-11-6	09181-40004	220A-12-2
	444B-39	09181-25073	220A-11-7		220B-12-2
	570A-38		220B-11-7		220C-12-2
09164-13010	444A-70		220C-11-7		220D-12-2
	444B-68		220D-11-7		220E-12-2
	570A-67		220E-11-7	09181-40005	220A-12-3
09164-14008	410A-24	09181-25074	220A-11-8		220B-12-3
	410B-24		220B-11-8		220C-12-3
	410C-24		220C-11-8		220D-12-3
	410D-24		220D-11-8		220E-12-3
09164-31001	220A-36		220E-11-8	09181-40006	220A-12-4
	220B-36	09181-25075	220A-11-9		220B-12-4
	220C-36		220B-11-9		220C-12-4
	220D-36		220C-11-9		220D-12-4
	220E-36		220D-11-9		220E-12-4
09168-10022	407A-7		220E-11-9	09181-40007	220A-12-5

PART NO.	FIG.NO.-REF.NO.	PART NO.	FIG.NO.-REF.NO.	PART NO.	FIG.NO.-REF.NO.
	220B-12-5		220B-9-11		220B-9-13
	220C-12-5		220C-9-11		220C-9-13
	220D-12-5		220D-9-11		220D-9-13
	220E-12-5		220E-9-11		220E-9-13
09181-40008	220A-12-6	09181-41002	220A-9-2	09181-41014	220A-9-14
	220B-12-6		220B-9-2		220B-9-14
	220C-12-6		220C-9-2		220C-9-14
	220D-12-6		220D-9-2		220D-9-14
	220E-12-6		220E-9-2		220E-9-14
09181-40009	220A-12-7	09181-41003	220A-9-3	09181-64002	220A-14-1
	220B-12-7		220B-9-3		220B-14-1
	220C-12-7		220C-9-3		220C-14-1
	220D-12-7		220D-9-3		220D-14-1
	220E-12-7		220E-9-3		220E-14-1
09181-40010	220A-12-8	09181-41004	220A-9-4	09181-64003	220A-14-2
	220B-12-8		220B-9-4		220B-14-2
	220C-12-8		220C-9-4		220C-14-2
	220D-12-8		220D-9-4		220D-14-2
	220E-12-8		220E-9-4		220E-14-2
09181-40011	220A-12-9	09181-41005	220A-9-5	09181-64004	220A-14-3
	220B-12-9		220B-9-5		220B-14-3
	220C-12-9		220C-9-5		220C-14-3
	220D-12-9		220D-9-5		220D-14-3
	220E-12-9		220E-9-5		220E-14-3
09181-40012	220A-12-10	09181-41006	220A-9-6	09181-64005	220A-14-4
	220B-12-10		220B-9-6		220B-14-4
	220C-12-10		220C-9-6		220C-14-4
	220D-12-10		220D-9-6		220D-14-4
	220E-12-10		220E-9-6		220E-14-4
09181-40013	220A-12-11	09181-41008	220A-9-8	09181-64006	220A-14-5
	220B-12-11		220B-9-8		220B-14-5
	220C-12-11		220C-9-8		220C-14-5
	220D-12-11		220D-9-8		220D-14-5
	220E-12-11		220E-9-8		220E-14-5
09181-40018	220A-12-1	09181-41009	220A-9-9	09181-64007	220A-14-6
	220B-12-1		220B-9-9		220B-14-6
	220C-12-1		220C-9-9		220C-14-6
	220D-12-1		220D-9-9		220D-14-6
	220E-12-1		220E-9-9		220E-14-6
09181-40186	220A-9-1	09181-41010	220A-9-10	09181-64008	220A-14-7
	220B-9-1		220B-9-10		220B-14-7
	220C-9-1		220C-9-10		220C-14-7
	220D-9-1		220D-9-10		220D-14-7
	220E-9-1		220E-9-10		220E-14-7
09181-40190	220A-9-7	09181-41012	220A-9-12	09181-64009	220A-14-8
	220B-9-7		220B-9-12		220B-14-8
	220C-9-7		220C-9-12		220C-14-8
	220D-9-7		220D-9-12		220D-14-8
	220E-9-7		220E-9-12		220E-14-8
09181-40195	220A-9-11	09181-41013	220A-9-13	09181-64010	220A-14-9

PART NO.	FIG.NO.-REF.NO.	PART NO.	FIG.NO.-REF.NO.	PART NO.	FIG.NO.-REF.NO.
	220B-14-9		336B-29	09248-18014	113A-7
	220C-14-9		336C-25	09250-40002	326G-6
	220D-14-9		336D-26	09260-10005	204A-20
	220E-14-9	09204-03003	407A-25		204B-20
09181-64011	220A-14-10		407B-25		204C-20
	220B-14-10		407C-23	09260-10006	444A-56
	220C-14-10		407D-25		444B-54
	220D-14-10		407E-25		570A-55
	220E-14-10	09205-05011	220A-3	09262-17019	401A-16
09202-04022	410A-25		220B-3		401B-16
	410B-25		220C-3	09262-32023	119A-2
	410C-25		220D-3	09262-35070	119A-3
	410D-25		220E-3	09263-25067	220A-6
09202-06031	160A-13	09205-10008	204A-19		220A-25
	160B-13		204B-19		220B-6
	160C-13		204C-19		220B-25
	160D-13	09206-08001	111A-3		220C-6
	160E-13		111B-3		220C-25
	160F-13	09206-13019	113A-9		220D-6
	160G-13	09208-06009	410A-42		220D-25
	160H-13		410B-43		220E-6
	160J-13		410C-43		220E-25
	160K-13		410D-42	09263-26023	407A-2
09202-07003	220A-18	09229-04025	420A-13		407B-2
	220B-18		420B-13		407C-2
	220C-18		420C-13		407D-2
	220D-18		420D-13		407E-2
	220E-18		420E-13	09265-25046	220A-4
09202-08006	401A-7		420F-13		220B-4
	401B-7		420G-13		220C-4
	405A-3		420H-13		220D-4
	405A-7		420J-13		220E-4
	405B-3		420K-13	09265-40003	220A-7
	405B-7		420M-13		220B-7
	405C-3		420N-13		220C-7
	405D-3	09229-04056	420L-13		220D-7
	405D-7	09246-04009	175A-14		220E-7
	407A-3	09248-10008	407A-6	09280-08012	144A-7
	407B-3		407B-6		144B-7
	407C-3		407C-6	09280-09008	180A-19
	407D-3		407D-6		180B-19
	407E-3		407E-6	09280-11001	401A-13
	444B-75	09248-12009	180A-14		401B-13
09204-01006	204A-9		180B-14	09280-17002	175A-6
	204A-15	09248-12011	204A-16	09280-20002	401A-14
	204B-9		204B-16		401B-14
	204B-15		204C-16	09280-22019	111A-6
	204C-9	09248-18010	401A-11		111B-6
	204C-15		401B-11		140A-5
	336A-29	09248-18011	113A-6	09280-26005	146A-3

PART NO.	FIG.NO.-REF.NO.
	146B-3
09280-26006	111A-16
	111B-16
	162A-9
	162B-9
09280-46004	220A-31
	220B-31
	220C-31
	220D-31
	220E-31
09280-55006	206A-8
	206B-8
	206C-8
09280-92004	220A-26
	220B-26
	220C-26
	220D-26
	220E-26
09282-08005	206A-9
	206B-9
	206C-9
09282-22007	220A-32
	220B-32
	220C-32
	220D-32
	220E-32
	401A-18
	401B-18
09282-25001	220A-27
	220B-27
	220C-27
	220D-27
	220E-27
09282-39001	336A-15
	336B-15
	336C-15
	336D-14
09283-52006	116A-12
09289-05012	121A-16
	121B-16
	121C-16
09289-18001	401A-17
	401B-17
09306-13007	410A-26
	410B-26
	410C-26
	410D-26
09307-09002	204A-10
	204A-17
	204B-10

PART NO.	FIG.NO.-REF.NO.
	204B-17
	204C-10
	204C-17
09320-04013	322A-22
	322B-18
	322C-22
09320-08062	144A-9
	144B-9
09320-08510	322A-5
	322B-5
	322C-5
09320-09016	111A-30
	111B-30
	136A-3
	310A-7
09320-09059	134A-6
09320-11023	410A-14
	410B-14
	410C-14
	410D-14
09321-08022	410A-8
	410B-8
	410C-8
	410D-8
09329-10024	420A-7
	420B-7
	420C-7
	420D-7
	420E-7
	420F-7
	420G-7
	420H-7
	420J-7
	420K-7
	420L-7
	420M-7
	420N-7
09343-70503-600	146A-12
	146B-13
09352-50003-490	143A-31
	143B-31
09352-50006-600	162A-13
	162A-14
	162B-13
	162B-14
	507A-2
	507A-3
09352-70104-600	410A-37
	410B-37
	410C-37

PART NO.	FIG.NO.-REF.NO.
	410D-37
09355-11165-600	111A-23
	111B-23
09355-40805-00B	407A-13
	407B-13
	407C-13
	407D-13
	407E-13
	501A-27
	501B-27
09362-09008	407A-14
	407B-14
	407C-14
	407D-14
	407E-14
09367-06006	507A-4
09380-22015	337A-22
	337B-22
	339A-13
09380-38003	336A-16
	336B-16
	336C-16
	336D-15
09381-18002	116A-4
09381-40005	405A-8
	405B-8
	405D-8
09383-04002	410A-43
	410B-44
	410C-44
	410D-43
09385-06012	204B-26
	442A-8
	442B-9
09401-08412	143A-32
	143B-32
09401-08413	162A-15
	162B-15
	507A-5
09401-11423	146A-6
	146A-15
	146B-16
	432A-5
09401-11425	144A-10
	144B-10
09401-14409	146B-25
09401-15414	111A-25
	111B-25
	113A-11
	162A-12

PART NO.	FIG.NO.-REF.NO.
	162B-12
09401-26408	162A-10
	162B-10
09403-07308	322A-29
	322B-25
	322C-29
09403-07338	315A-15
	315C-15
09403-11320	146A-17
	146B-18
	410A-39
	410B-39
	410C-39
	410D-39
09403-11321	322A-33
	322B-29
	322C-33
	326A-9
	326B-9
	326C-9
	326D-9
	326E-9
	326F-9
	326G-7
	326H-9
	326J-9
09403-12324	143A-34
	143B-34
09403-12409	322A-34
	322B-30
	322C-34
09403-13413	315A-16
	315C-16
09403-13414	303A-10
09403-20310	303A-13
09407-08401	530A-8
	530A-30
	535A-11
09407-10404	326A-10
	326B-10
	326C-10
	326D-10
	326E-10
	326F-10
	326G-8
	326H-10
	326J-10
	407A-15
	407B-15
	407C-15

PART NO.	FIG.NO.-REF.NO.
	407D-15
	407E-15
	501A-28
	501B-28
09407-11401	162A-16
	162B-16
09407-14407	315A-19
	315C-19
	322A-30
	322B-26
	322C-30
	331A-9
	501A-6
	501A-18
	501B-6
	501B-18
	535A-27
	602B-3
09407-20405	507A-7
09407-25402	410A-30
	410B-30
	410C-30
	410D-30
09408-00020	322A-36
09408-00021	322A-19
	322B-15
	322C-19
09408-00024	322A-31
	322B-27
	322C-31
09408-00155	111A-26
	111B-26
09408-00233	144A-11
	144B-11
09409-10304-5ES	410A-35
	410B-35
	410C-35
	410D-35
09420-04008	303A-4
09420-04009	160A-14
	160B-14
	160C-14
	160D-14
	160E-14
	160F-14
	160G-14
	160H-14
	160J-14
	160K-14
09440-06037	444A-61

PART NO.	FIG.NO.-REF.NO.
	444B-59
	570A-76
09440-07071	204A-21
	204B-21
	204C-21
09440-09043	220A-19
	220B-19
	220C-19
	220D-19
	220E-19
09440-12027	444A-40
	444B-40
	570A-39
09440-19028	336A-30
	336B-30
	336C-26
	336D-27
	336D-44
09440-42002	220A-20
	220B-20
	220C-20
	220D-20
	220E-20
09443-10043	336A-31
	336B-31
	336C-27
09471-12028	501A-4
	501B-4
09471-12077	460A-6
	501A-21
	501A-30
	501B-21
09471-12103	460A-4
	501A-9
	501A-13
	501A-15
	501A-19
	501B-9
	501B-13
	501B-15
	501B-19
09471-12108	460A-2
	501A-2
	501B-2
09481-10501	508A-54
	508B-54
	521B-3
09481-10504	322A-11
	322B-8
	322C-11

PART NO.	FIG.NO.-REF.NO.	PART NO.	FIG.NO.-REF.NO.	PART NO.	FIG.NO.-REF.NO.
09481-15501	322A-38				
	322C-38				
09481-30504	322A-12				
	322B-9				
	322C-12				
09481-40403	322A-13				
	322B-10				
	322C-13				
09482-00446	111A-31				
	111B-31				
09800-81841	420A-16				
	420B-16				
	420C-16				
	420D-16				
	420E-16				
	420F-16				
	420G-16				
	420H-16				
	420J-16				
	420K-16				
	420L-16				
	420M-16				
	420N-16				

PART NO.	FIG.NO.-REF.NO.	PART NO.	FIG.NO.-REF.NO.	PART NO.	FIG.NO.-REF.NO.

SUZUKI **DF70A/80A/90A/100B** PARTS CATALOGUE

SUZUKI MOTOR CORPORATION All rights reserved
No part of this document may be reproduced or transmitted in any form or by any means, electronic or mechanical, for any purpose, without the express written permission of Suzuki Motor Corporation.

SUZUKI MOTOR CORPORATION
Technical Readiness Group, Quality Administration Department
300 Takatsuka, Minami, Hamamatsu, Japan

Copyright © SUZUKI MOTOR CORPORATION 2020 All Rights Reserved

SUZUKI MOTOR CORPORATION

PRINTED IN JAPAN

9900B-45453-001