SUZUKI

PARTS CATALOGUE

DF40A/50A/60A

DF40A/ATH/AQH
DF40AST
DF50A/ATH
DF60A/ATH/AQH
DF50AV/AVTH
DF60AV/AVTH

SUZUKI

Way of Life!

OUTBOARD MOTOR

E01/E40/E34

2017-9

1ST EDITION

PREFACE

When it becomes necessary to replace parts on SUZUKI OUTBOARD MOTORS, always use SUZUKI GENUINE PARTS which have passed a strict inspection which guarantees quality and performance.

This parts catalogue covers the list of all service parts for SUZUKI DF40A/50A/60A production start 2017.

INSTRUCTIONS FOR QUOTING THE CATALOGUE

1. DIMENSIONS

Dimensions of the parts in this catalogue are indicated in unit millimeters.

2. ABBREVIATIONS

Abbreviations used in this catalogue are as follows:

AR	: As required	NT	: Number of teeth
ASSY	: Assembly	OPT	: Optional
E.NO.	: Engine number	OS	: Over size
F.NO.	: Frame number	STD	: Standard
D	: Diameter of material	T	: Thickness
ID	: Inside diameter	US	: Under size
OD	: Outside diameter	W	: Width
L	: Length	W/	: With
LH(PORT)	: Left hand side	S,L,X	: Transom type
RH(STBD)	: Right hand side	SUS	: Stainless steel
～031234	: Up to E.No.06002F-031234	PTT	: Power trim and tilt
031234～	: From E.No.06002F-031234		

12 x 34 x 5.6…… Figures in the description column show the dimensions of parts.
ID OD T(or W,L)

→12345-56781 (Parts No.) : indicates that the parts number was changed to 12345-56781 and the new parts are interchangeable with the former ones but the former ones are not interchangeable with new ones.

←12345-56781 (Parts No.) : indicates that the former and new parts are interchangeable with each other and both are usable.

3. INNER PARTS OF ASSEMBLY

Part name with a dot (.) in front as shown in the description column indicates the component of the assembly also available individually.

4. MODIFICATION NOTICE

A parts bulletin will be sent to you on all occasions when changes in parts occur, including interchangeable modifications between new parts and old ones.

5. NOTE

5-1. There are some different parts from those of production models among spare parts for the administrative reasons and common use of them with other models.

5-2. In respect of rubber hoses and vinyl tubes, please be sure to use them by cutting off according to the length mentioned on parts catalogue or what is actually required on the vehicle.

5-3. Note that the drawings on the illustration page are for ready reference of spare parts number, not to be used as an assembly manual.
When assembling, use "SUZUKI SERVICE MANUAL".

6. MODEL NAME AND ENGINE NUMBER

MODEL	DESTINATION	TYPE	TRANSOM	COLOR	ENGINE No.
DF40ATL	E01	04003F	S, L	YAY, Y5S	04003F-810001～
DF40ATHL	E01	04003F	L	YAY	04003F-810001～
DF40AQHL	E01	04003F	L	YAY	04003F-810001～
DF40AST	E34	04004F	S, L	YAY, Y5S	04004F-810001～
DF50ATL	E01	05003F	S, L	YAY, Y5S	05003F-810001～
DF50ATHL	E01	05003F	L	YAY	05003F-810001～
DF60ATL	E01	06002F	S, L, X	YAY, Y5S	06002F-810001～
DF60ATL	E40	06002F	L, X	YAY, Y5S	06002F-810001～
DF60ATHL	E01, E40	06002F	L, X	YAY	06002F-810001～
DF60AQHL	E01, E40	06002F	L, X	YAY	06002F-810001～
DF50AVT	E01	05004F	S, L	YAY	05004F-810001～
DF50AVTH	E01	05004F	L	YAY	05004F-810001～
DF60AVT	E01	06003F	S, L, X	YAY	06003F-810001～
DF60AVT	E40	06003F	L, X	YAY	06003F-810001～
DF60AVTH	E01, E40	06003F	L, X	YAY	06003F-810001～

MILLIMETER → INCH CONVERSION CHART

	0	1	2	3	4	5	6	7	8	9
00	.000	.039	.079	.118	.157	.197	.236	.276	.315	.354
10	.394	.433	.472	.512	.551	.591	.630	.669	.709	.748
20	.787	.827	.866	.906	.945	.984	1.024	1.063	1.102	1.142
30	1.181	1.220	1.260	1.299	1.339	1.378	1.417	1.457	1.496	1.535
40	1.575	1.614	1.654	1.693	1.732	1.772	1.811	1.850	1.890	1.929
50	1.969	2.008	2.047	2.087	2.126	2.165	2.205	2.214	2.283	2.323
60	2.362	2.402	2.441	2.480	2.520	2.559	2.598	2.638	2.677	2.717
70	2.756	2.795	2.835	2.874	2.913	2.953	2.992	3.031	3.071	3.110
80	3.150	3.189	3.228	3.268	3.307	3.346	3.386	3.425	3.465	3.504
90	3.543	3.583	3.622	3.661	3.701	3.740	3.780	3.819	3.858	3.898

How to read

	0	1	2	3	4
00	…	…	…	…	…
10	…	…	…	…	…
20	…	…	…	0.906	…
30	…	…	…	…	…

23 millimeters equal 0.906 inch

Contents are subject to change without notice or obligation.

FIG.111A

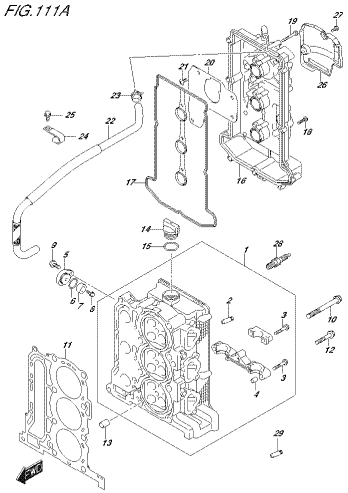

DF8RA_E01_018_111A
CYLINDER HEAD

FIG.111B

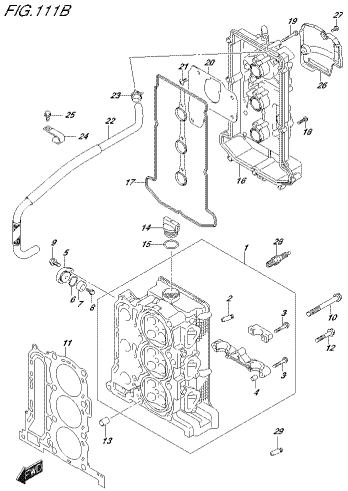

DF8RA_E01_018_111B
CYLINDER HEAD

FIG.111C

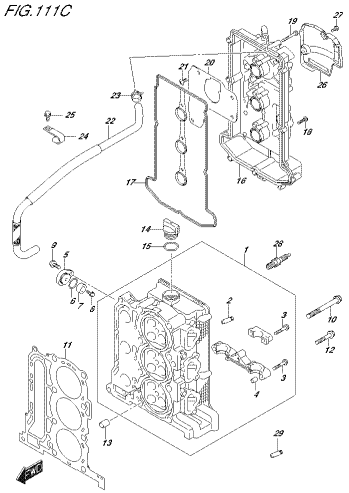

DF8RA_E01_018_111C
CYLINDER HEAD

FIG.111D

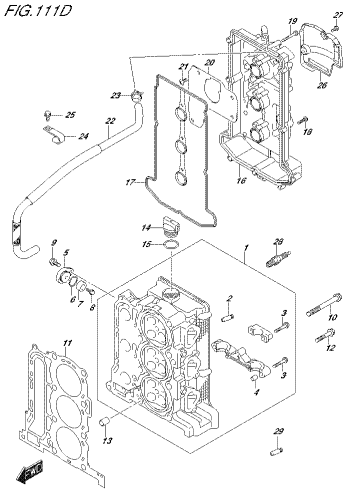

DF8RA_E01_018_111D
CYLINDER HEAD

FIG.113A

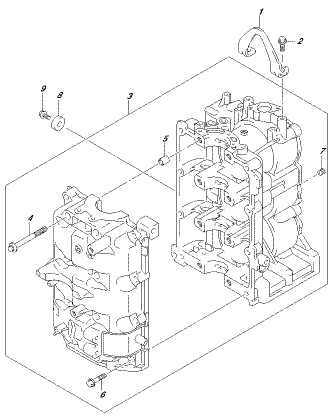

DF8RA_E01_018_113A
CYLINDER BLOCK

FIG.116A

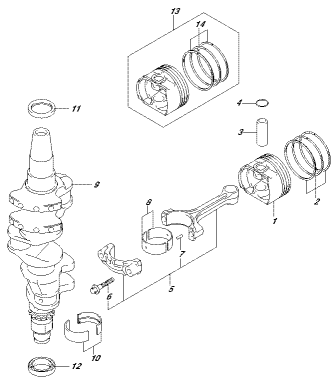

DF8RA_E01_018_116A
CRANKSHAFT

FIG.119A

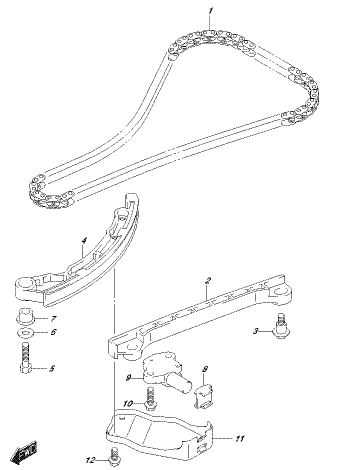

DF8RA_E01_018_119A
TIMING CHAIN

FIG.121A

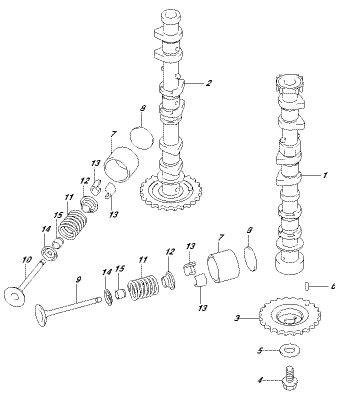

DF8RA_E01_018_121A
CAMSHAFT

FIG.124A

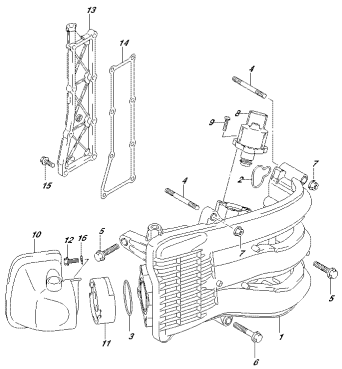

DF90A_E01_018_124A
INTAKE MANIFOLD/SLEIVCER/EXHAUST COVER

FIG.124B

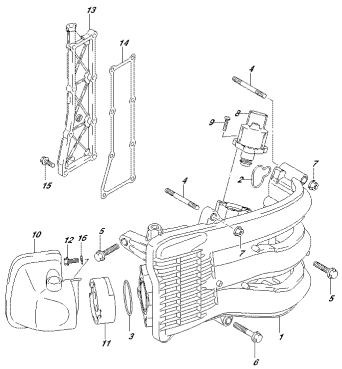

DF90A_E01_018_124B
INTAKE MANIFOLD/SLEIVCER/EXHAUST COVER

FIG.124C

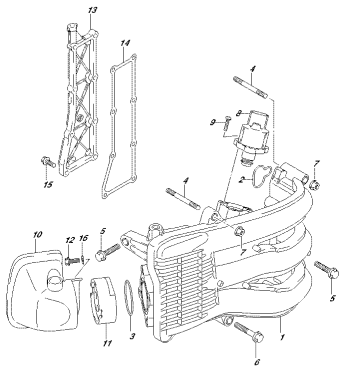

DF90A_E01_018_124C
INTAKE MANIFOLD/SLEIVCER/EXHAUST COVER

FIG.124D

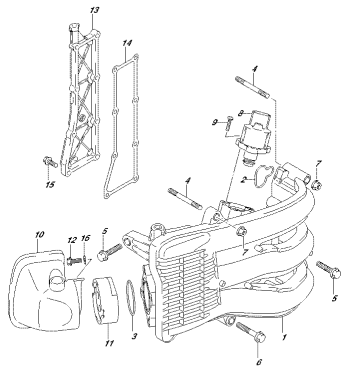

DF90A_E01_018_124D
INTAKE MANIFOLD/SLEIVCER/EXHAUST COVER

FIG.124E

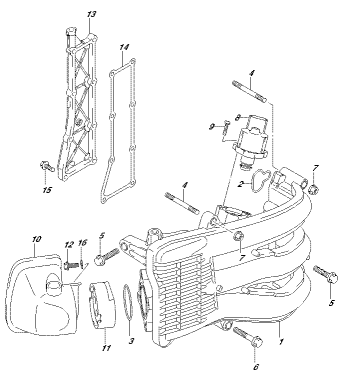

DF90A_E01_018_124E
INTAKE MANIFOLD/SLEIVCER/EXHAUST COVER

FIG.136A

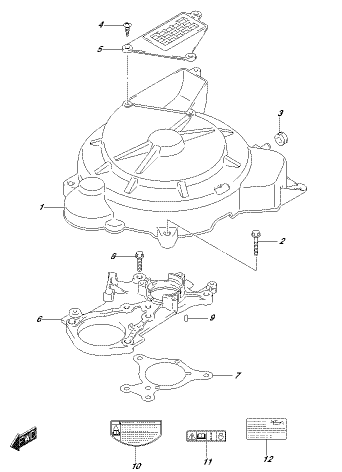

DF90A_E01_018_136A
RING GEAR COVER

FIG.143A

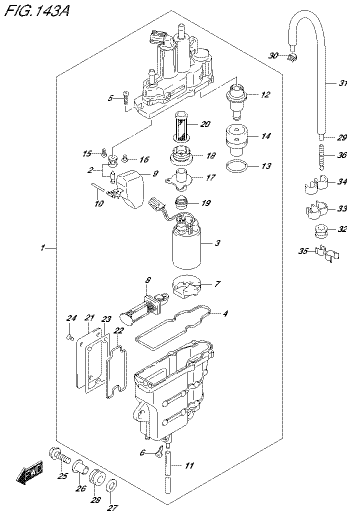

DF90A_E01_018_143A
FUEL VAPOR SEPARATOR

FIG.143B

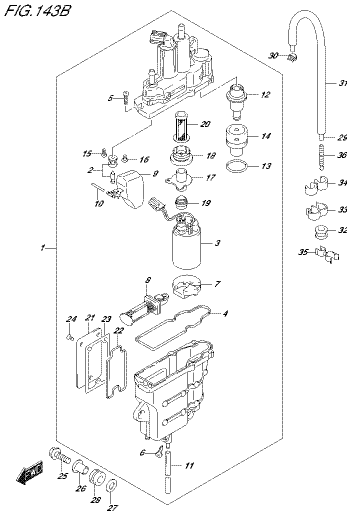

DF90A_E01_018_143B
FUEL VAPOR SEPARATOR

FIG.144A

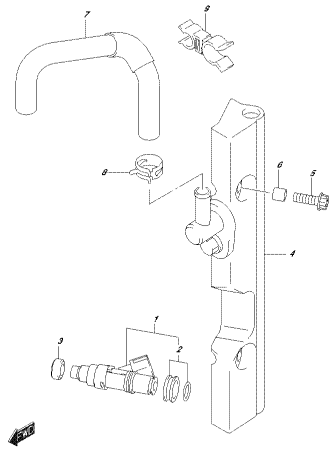

DF90A_E01_018_144A
FUEL INJECTOR

FIG.144B

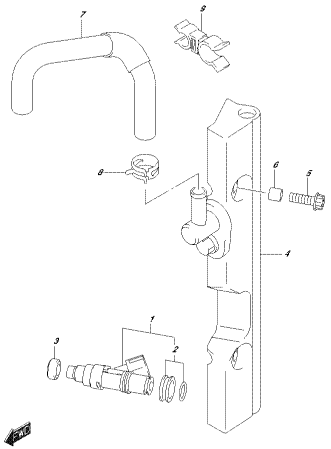

DF90A_E01_018_144B
FUEL INJECTOR

FIG.146A

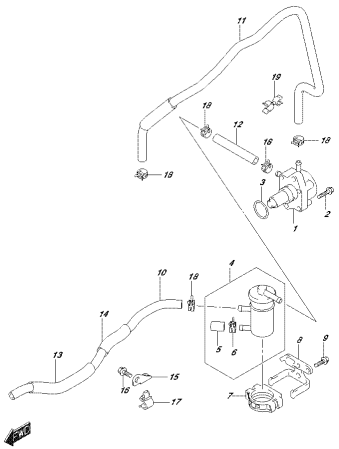

DF90A_E01_018_146A
FUEL PUMP

FIG.160A

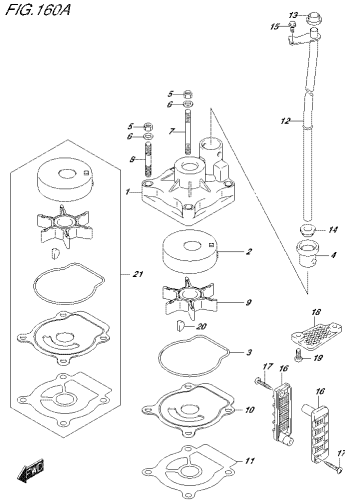

DF90A_E01_018_160A
WATER PUMP

FIG.160B

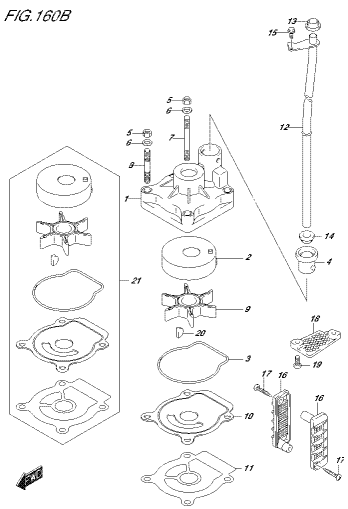

DF90A_E01_018_160B
WATER PUMP

FIG.160C

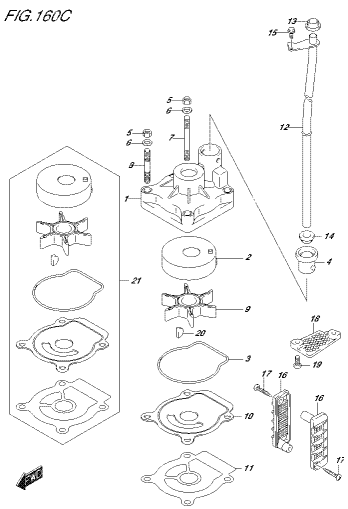

DF90A_E01_018_160C
WATER PUMP

FIG.160D

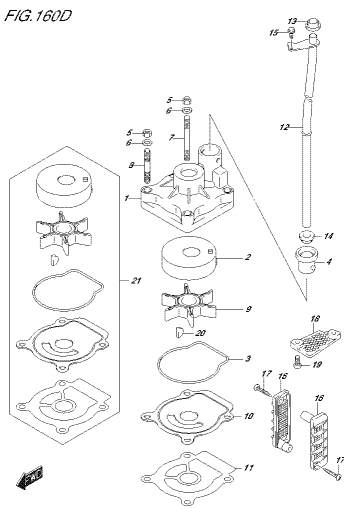

DF90A_E01_018_160D
WATER PUMP

FIG.160E

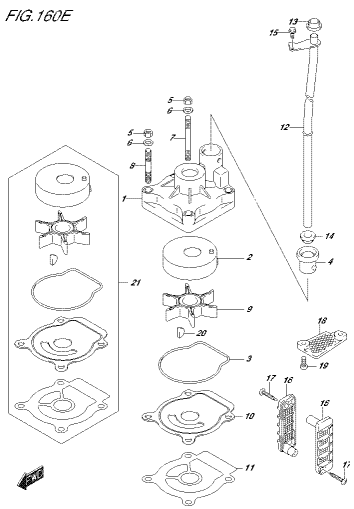

DF90A_E01_018_160E
WATER PUMP

FIG.160F

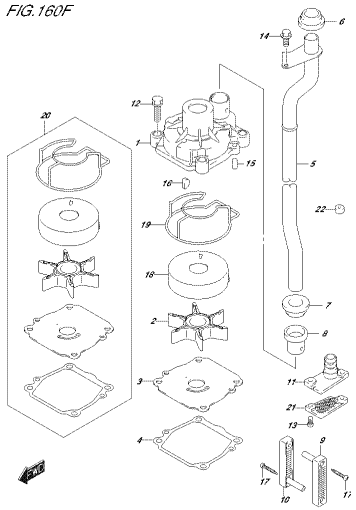

DF90A_E01_018_160F
WATER PUMP

FIG.160G

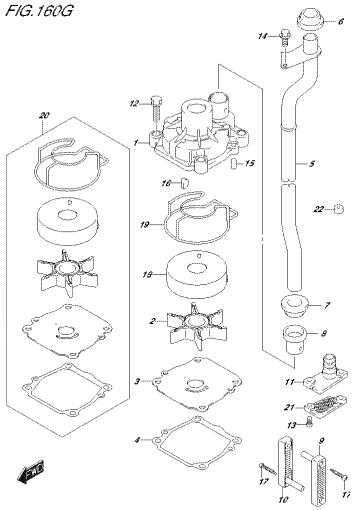

DF90A_E01_018_160G
WATER PUMP

FIG.160H

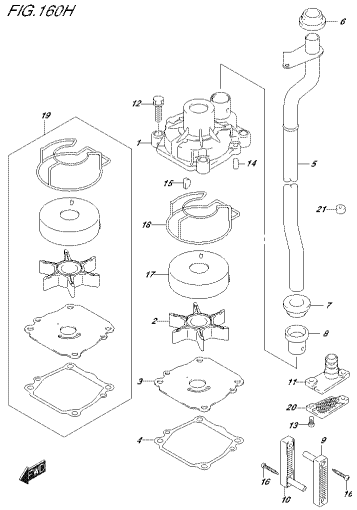

DF90A_E01_018_160H
WATER PUMP

FIG.162A

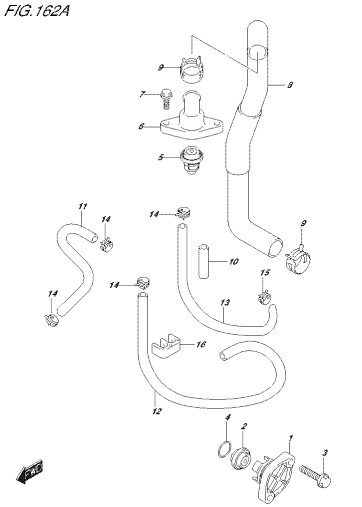

DF90A_E01_018_162A
THERMOSTAT

FIG.162B

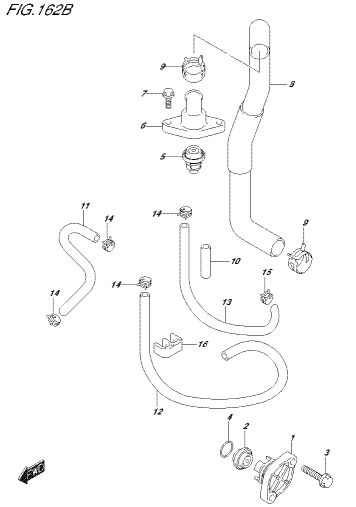

DF90A_E01_018_162B
THERMOSTAT

FIG.162C

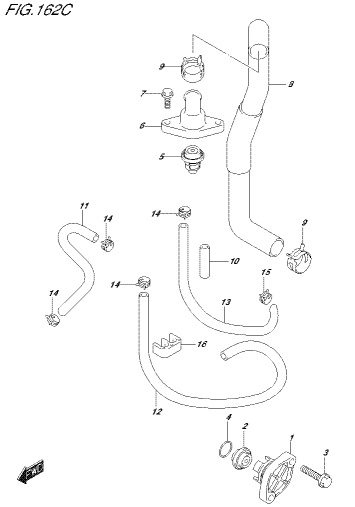

DF90A_E01_018_162C
THERMOSTAT

FIG.163A

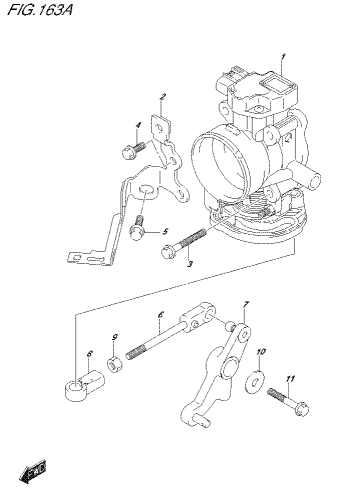

DF90A_E01_018_163A
THROTTLE BODY

FIG.163B

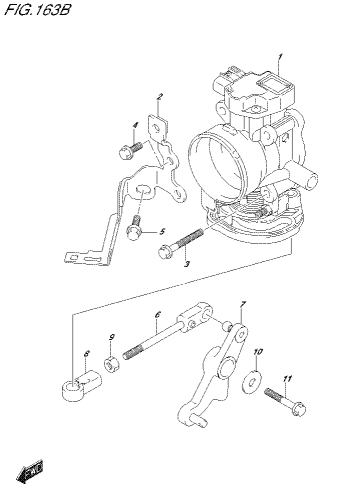

DF90A_E01_018_163B
THROTTLE BODY

FIG.163C

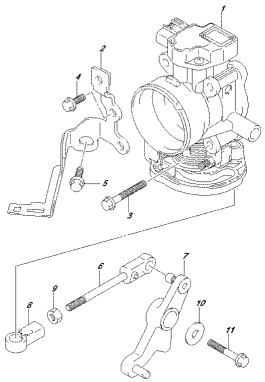

DF90A_E01_018_163C
THROTTLE BODY

FIG.163D

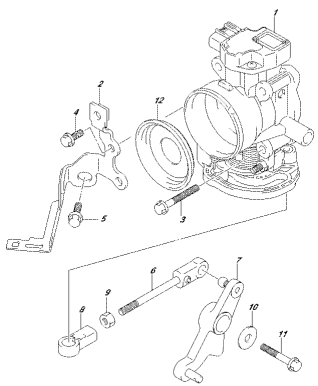

DF90A_E01_018_163D
THROTTLE BODY

FIG.175A

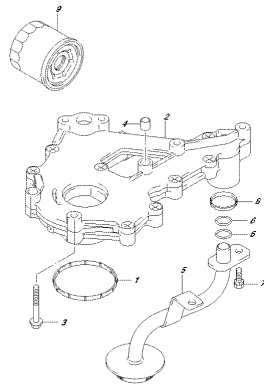

DF90A_E01_018_175A
OIL PUMP

FIG.180A

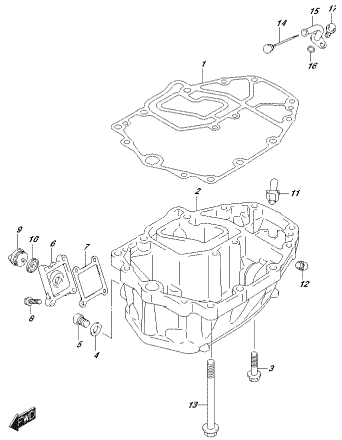

DF90A_E01_018_180A
OIL PAN

FIG.180B

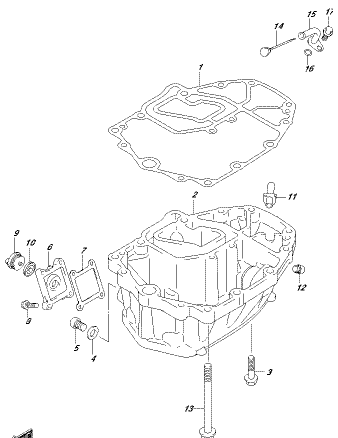

DF90A_E01_018_180B
OIL PAN

FIG.180C

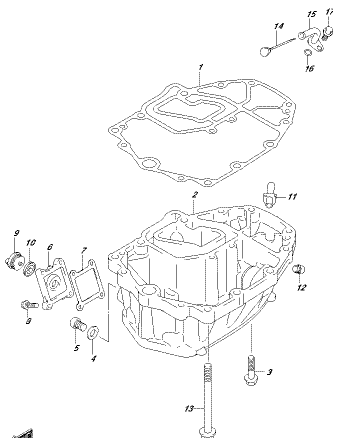

DF90A_E01_018_180C
OIL PAN

FIG.204A

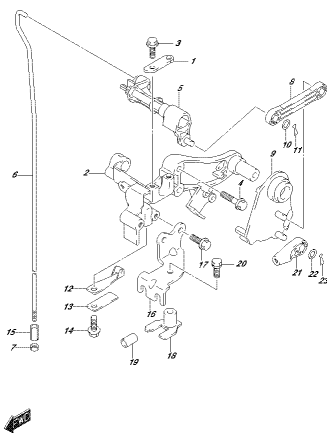

DF90A_E01_018_204A
CLUTCH SHAFT

FIG.204B

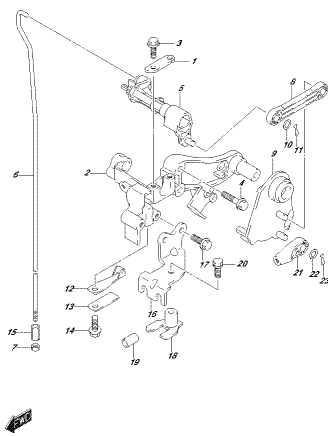

DF90A_E01_018_204B
CLUTCH SHAFT

FIG.204C

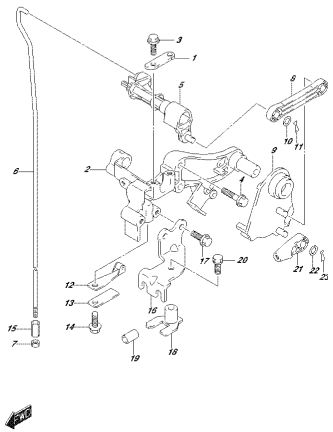

DF80A_E01_018_204C
CLUTCH SHAFT

FIG.204D

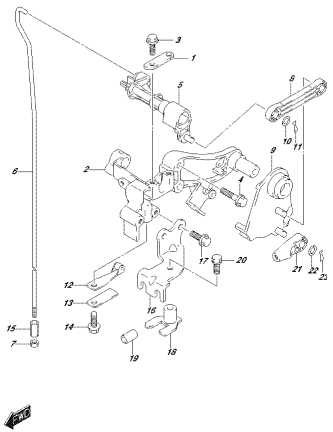

DF80A_E01_018_204D
CLUTCH SHAFT

FIG.204E

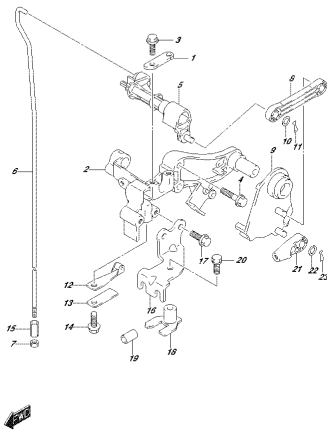

DF80A_E01_018_204E
CLUTCH SHAFT

FIG.204F

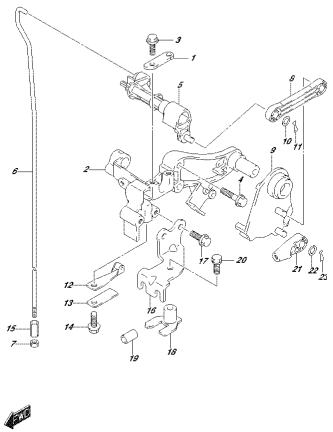

DF80A_E01_018_204F
CLUTCH SHAFT

FIG.204G

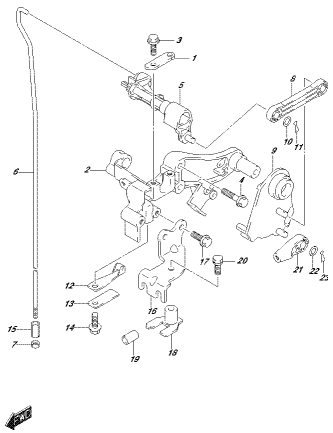

DF80A_E01_018_204G
CLUTCH SHAFT

FIG.206A

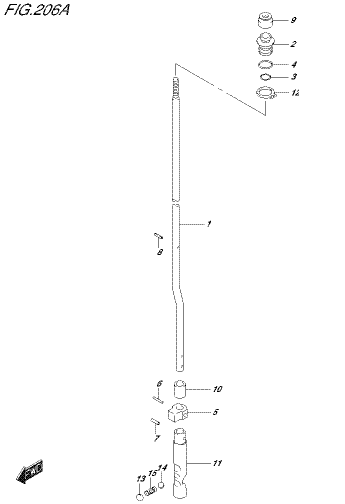

DF80A_E01_018_206A
CLUTCH ROD

FIG.206B

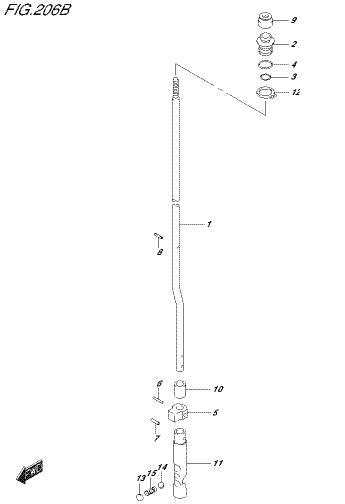

DF80A_E01_018_206B
CLUTCH ROD

FIG.206C

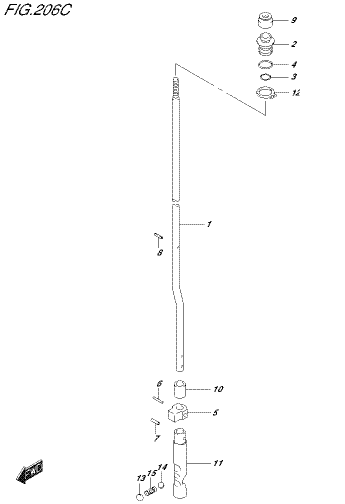

DF80A_E01_018_206C
CLUTCH ROD

FIG.206D

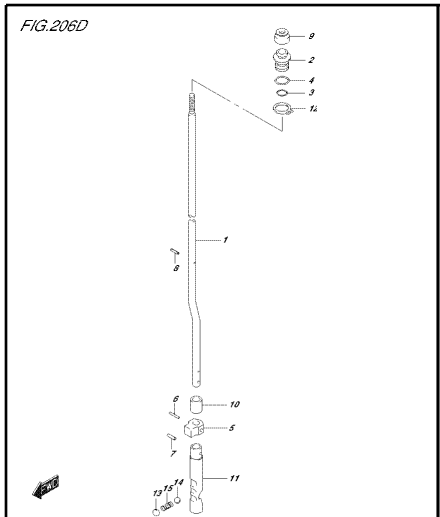

DF90A_E01_018_206D
CLUTCH ROD

FIG.206E

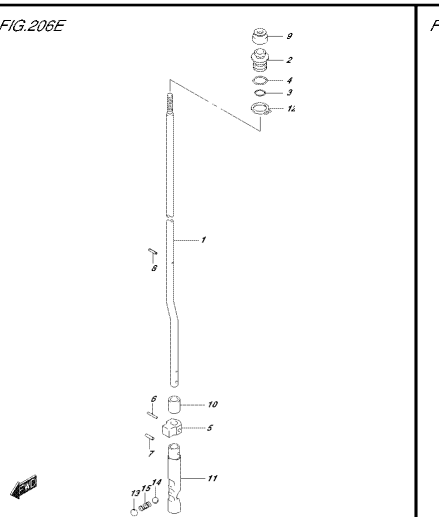

DF90A_E01_018_206E
CLUTCH ROD

FIG.210A

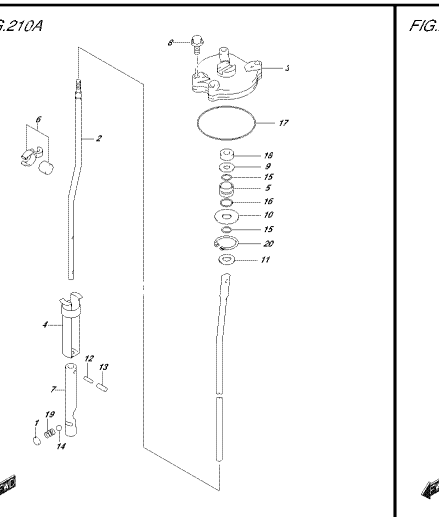

DF90A_E01_018_210A
SHIFT ROD

FIG.210B

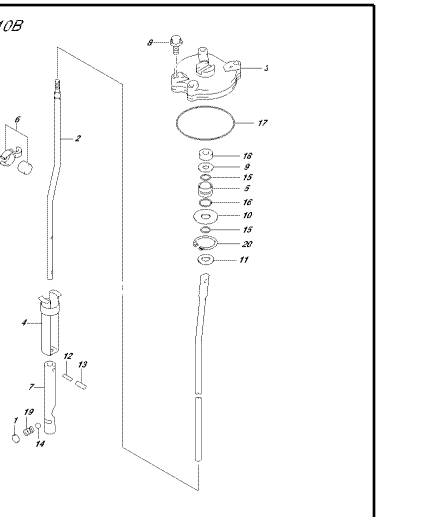

DF90A_E01_018_210B
SHIFT ROD

FIG.220A

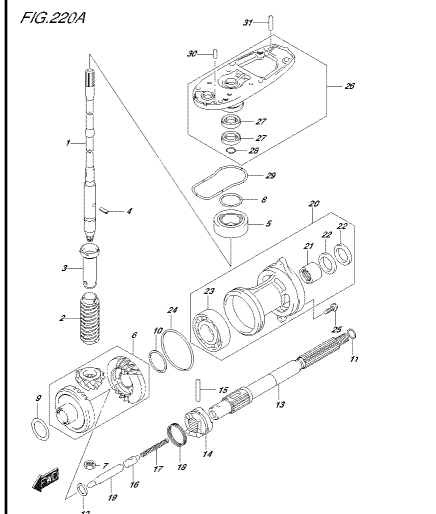

DF90A_E01_018_220A
TRANSMISSION

FIG.220B

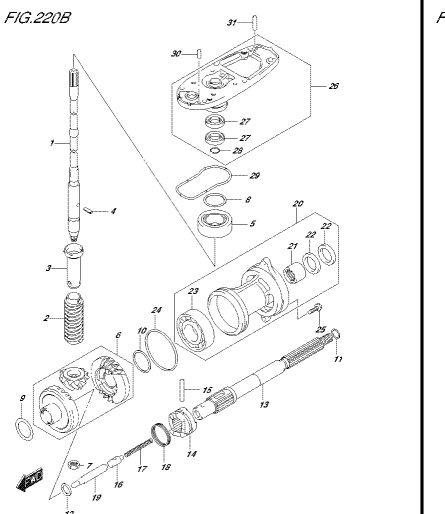

DF90A_E01_018_220B
TRANSMISSION

FIG.220C

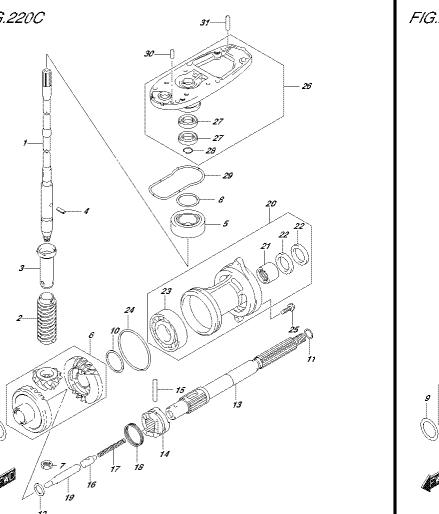

DF90A_E01_018_220C
TRANSMISSION

FIG.220D

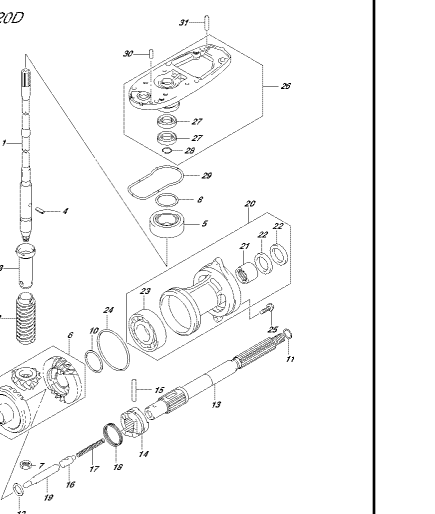

DF90A_E01_018_220D
TRANSMISSION

FIG.220E

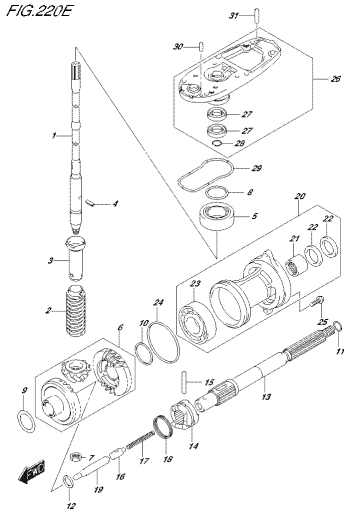

DF90A_E01_018_220E
TRANSMISSION

FIG.220F

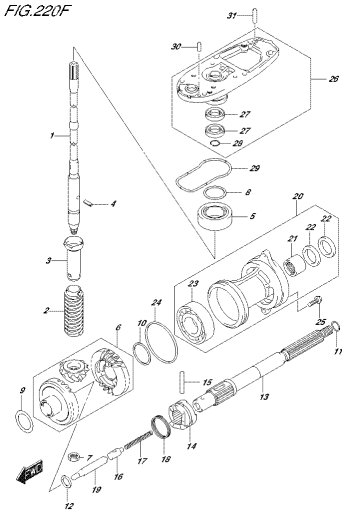

DF90A_E01_018_220F
TRANSMISSION

FIG.220G

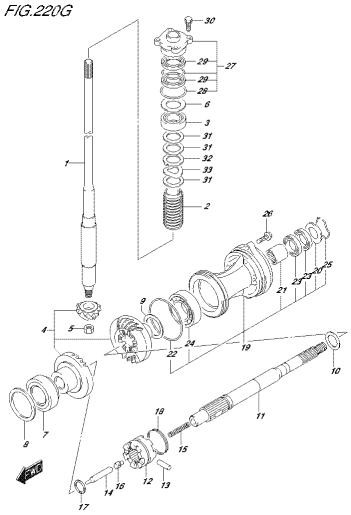

DF90A_E01_018_220G
TRANSMISSION

FIG.220H

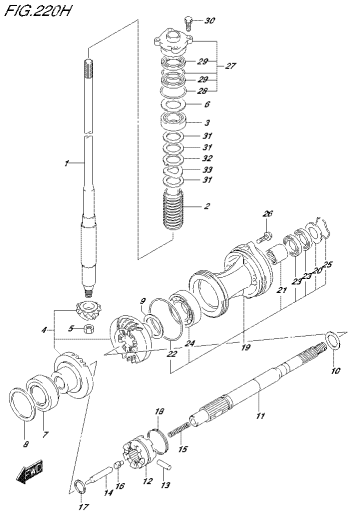

DF90A_E01_018_220H
TRANSMISSION

FIG.301A

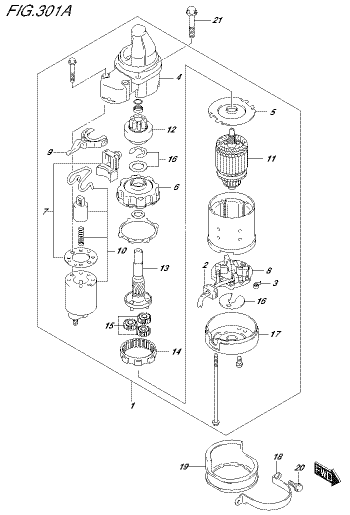

DF90A_E01_018_301A
STARTING MOTOR

FIG.303A

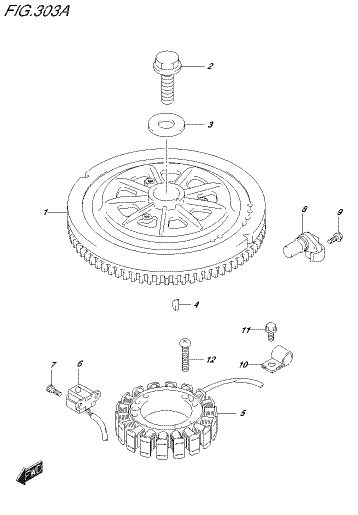

DF90A_E01_018_303A
MAGNETO

FIG.310A

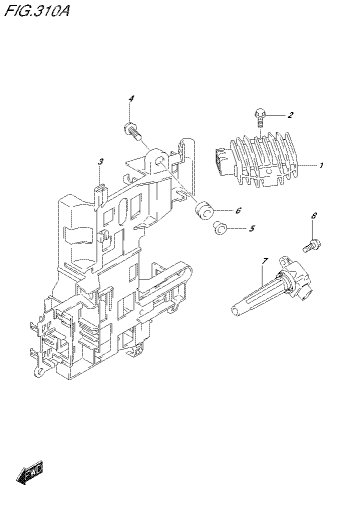

DF90A_E01_018_310A
RECTIFIER/IGNITION COIL

FIG.315A

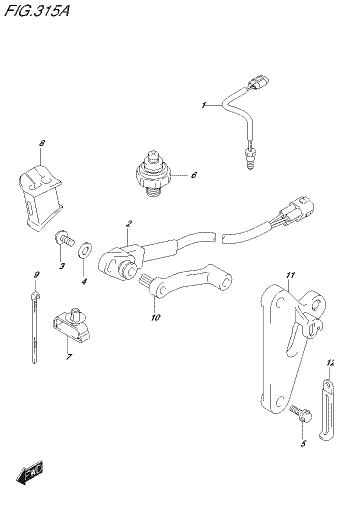

DF90A_E01_018_315A
SENSOR

FIG.315B

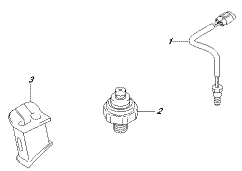

DF90A_E01_018_315B
SENSOR

FIG.315C

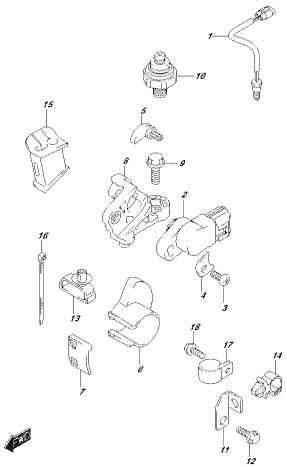

DF90A_E01_018_315C
SENSOR

FIG.315D

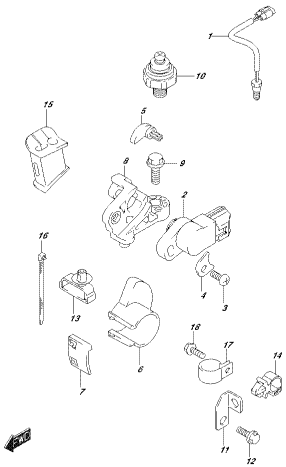

DF90A_E01_018_315D
SENSOR

FIG.322A

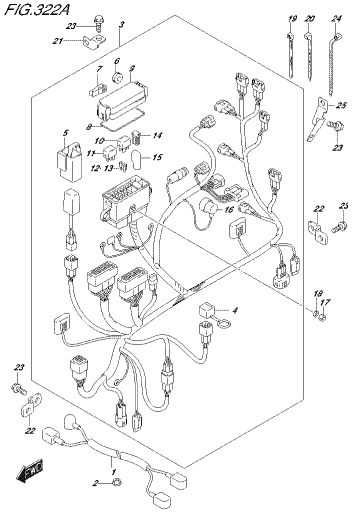

DF90A_E01_018_322A
HARNESS

FIG.322B

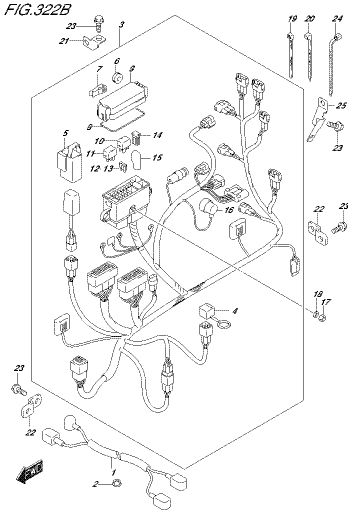

DF90A_E01_018_322B
HARNESS

FIG.322C

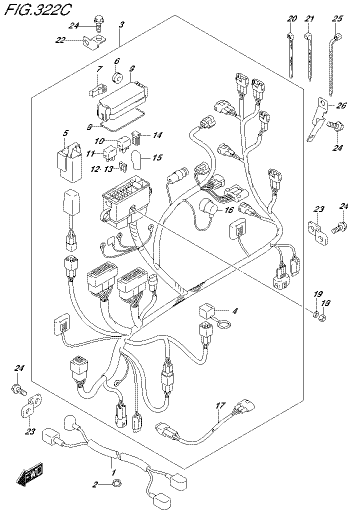

DF90A_E01_018_322C
HARNESS

FIG.322D

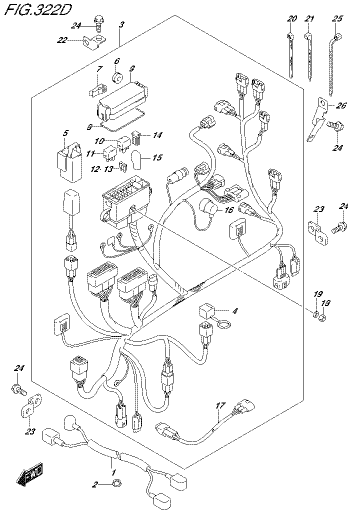

DF90A_E01_018_322D
HARNESS

FIG.322E

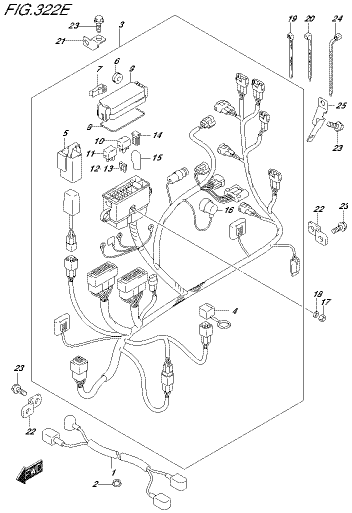

DF90A_E01_018_322E
HARNESS

FIG.326A

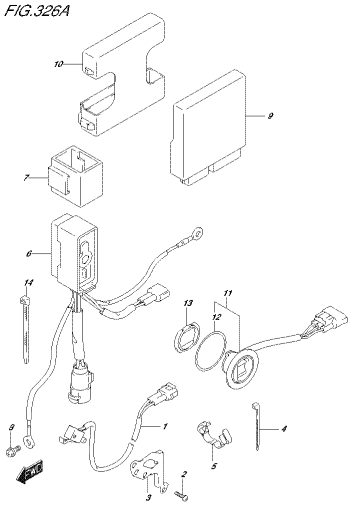

DF90A_E01_018_326A
PTT SWITCH/ENGINE CONTROL UNIT

FIG.326B

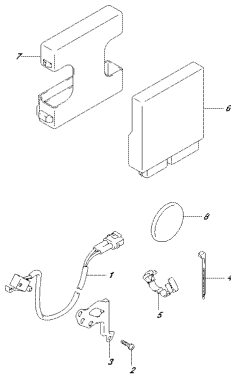

DF90A_E01_018_326B
PTT SWITCH/ENGINE CONTROL UNIT

FIG.326C

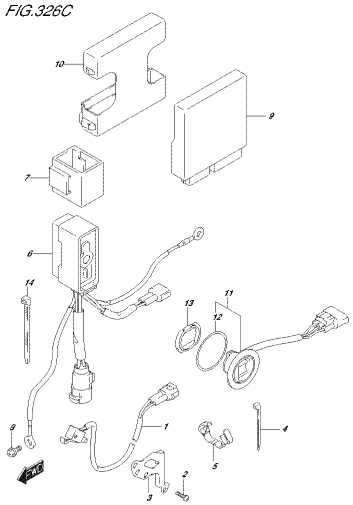

DF90A_E01_018_326C
PTT SWITCH/ENGINE CONTROL UNIT

FIG.326D

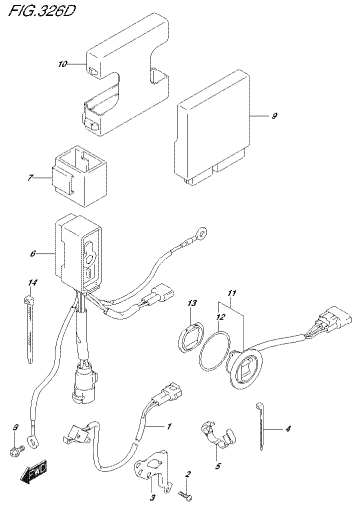

DF90A_E01_018_326D
PTT SWITCH/ENGINE CONTROL UNIT

FIG.326E

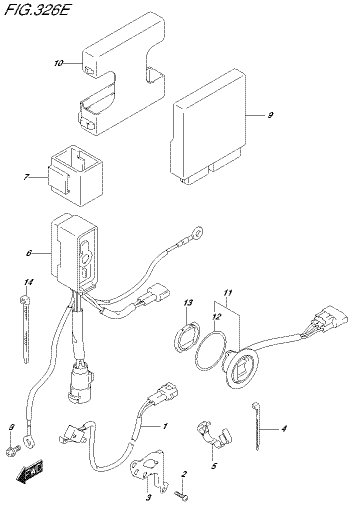

DF90A_E01_018_326E
PTT SWITCH/ENGINE CONTROL UNIT

FIG.326F

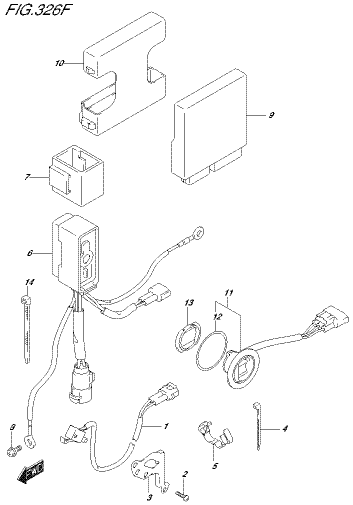

DF90A_E01_018_326F
PTT SWITCH/ENGINE CONTROL UNIT

FIG.326G

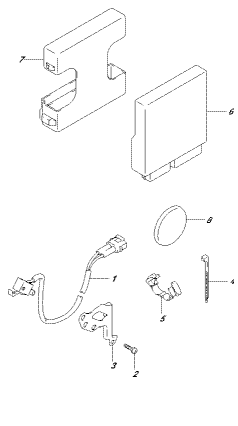

DF90A_E01_018_326G
PTT SWITCH/ENGINE CONTROL UNIT

FIG.326H

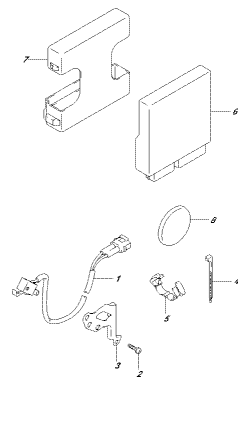

DF90A_E01_018_326H
PTT SWITCH/ENGINE CONTROL UNIT

FIG.326J

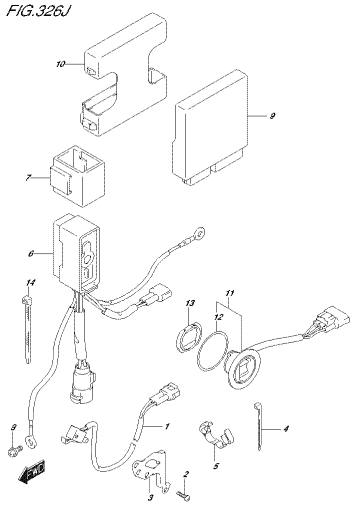

DF90A_E01_018_326J
PTT SWITCH/ENGINE CONTROL UNIT

FIG.326K

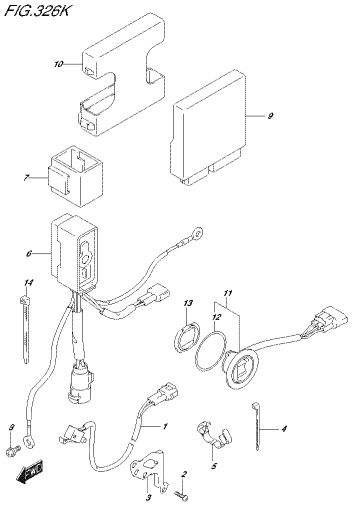

DF90A_E01_018_326K
PTT SWITCH/ENGINE CONTROL UNIT

FIG.326L

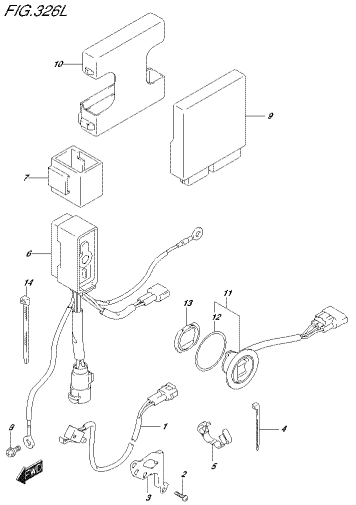

DF90A_E01_018_326L
PTT SWITCH/ENGINE CONTROL UNIT

FIG.335A

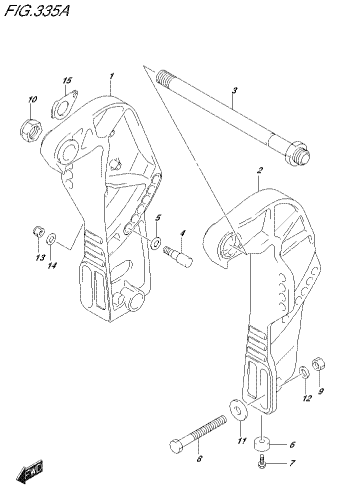

DF90A_E01_018_335A
CLAMP BRACKET

FIG.335B

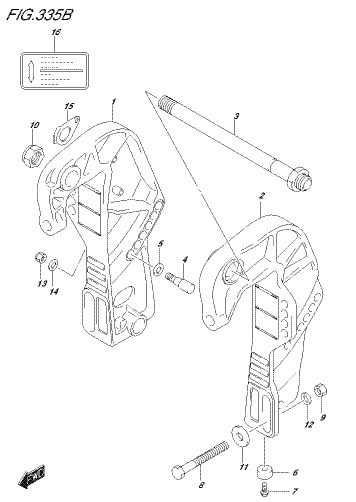

DF90A_E01_018_335B
CLAMP BRACKET

FIG.335C

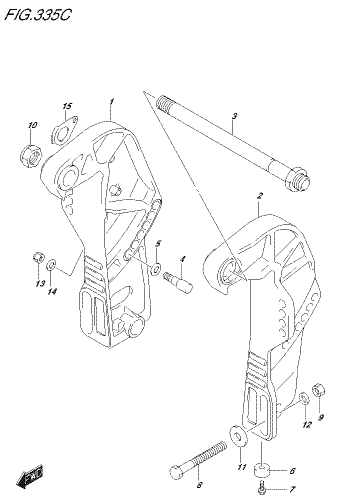

DF90A_E01_018_335C
CLAMP BRACKET

FIG.335D

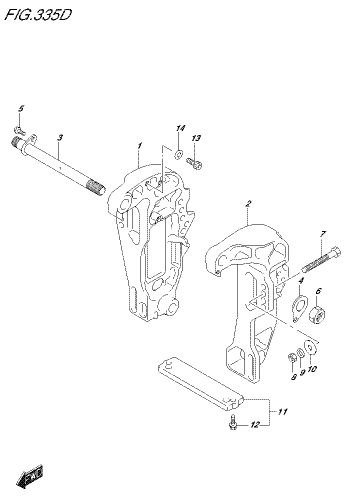

DF90A_E01_018_335D
CLAMP BRACKET

FIG.335E

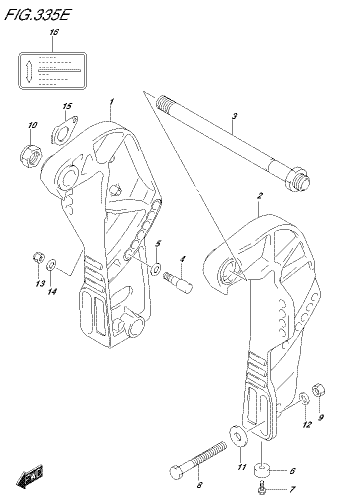

DF90A_E01_018_335E
CLAMP BRACKET

FIG.335F

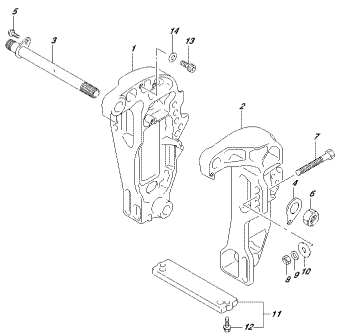

DF60A_E01_018_335F
CLAMP BRACKET

FIG.335G

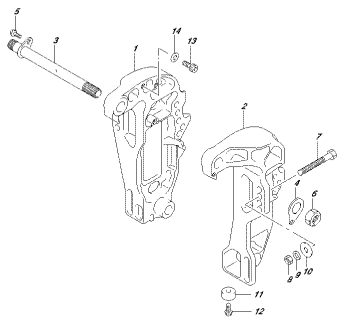

DF60A_E01_018_335G
CLAMP BRACKET

FIG.336A

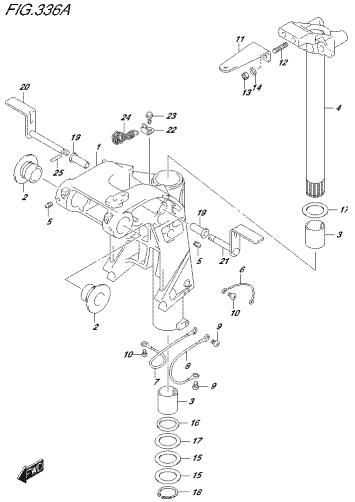

DF60A_E01_018_336A
SWIVEL BRACKET

FIG.336B

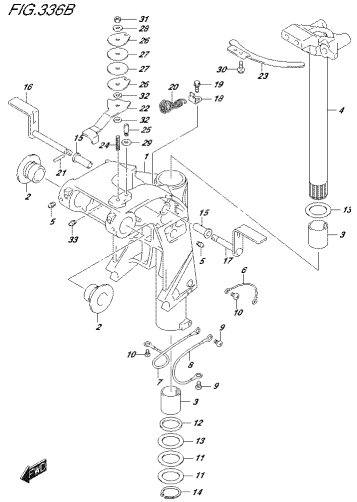

DF60A_E01_018_336B
SWIVEL BRACKET

FIG.336C

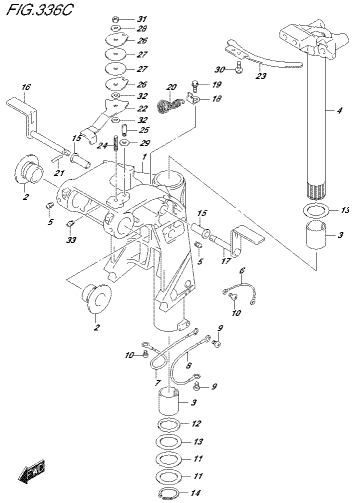

DF60A_E01_018_336C
SWIVEL BRACKET

FIG.336D

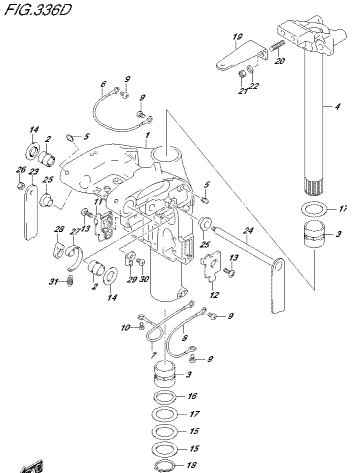

DF60A_E01_018_336D
SWIVEL BRACKET

FIG.336E

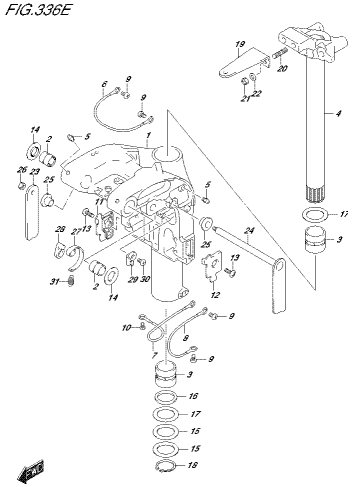

DF60A_E01_018_336E
SWIVEL BRACKET

FIG.336F

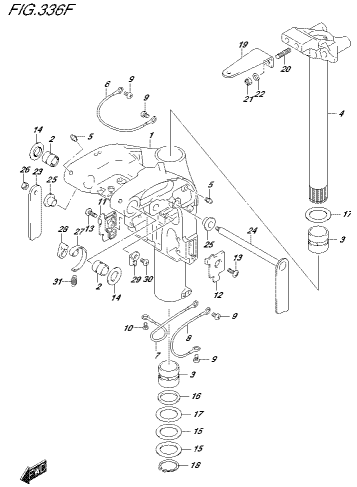

DF60A_E01_018_336F
SWIVEL BRACKET

FIG.336G

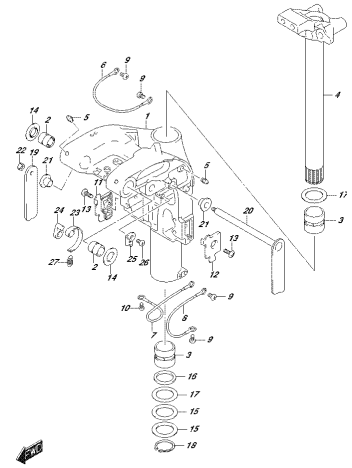

DF60A_E01_018_336G
SWIVEL BRACKET

FIG.336H

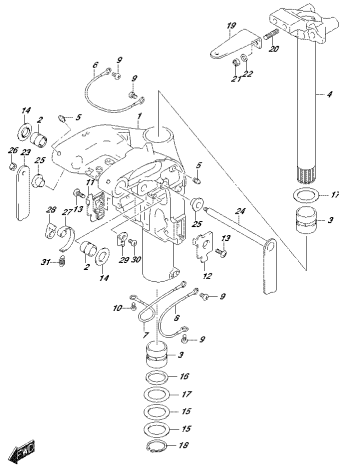

DF60A_E01_018_336H
SWIVEL BRACKET

FIG.336J

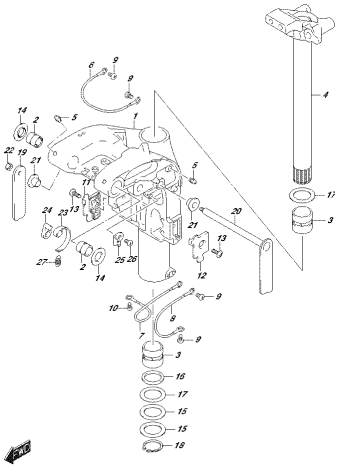

DF60A_E01_018_336J
SWIVEL BRACKET

FIG.336K

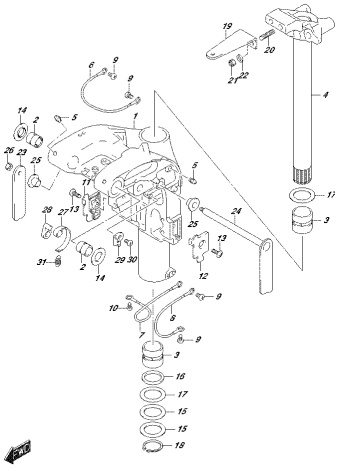

DF60A_E01_018_336K
SWIVEL BRACKET

FIG.336L

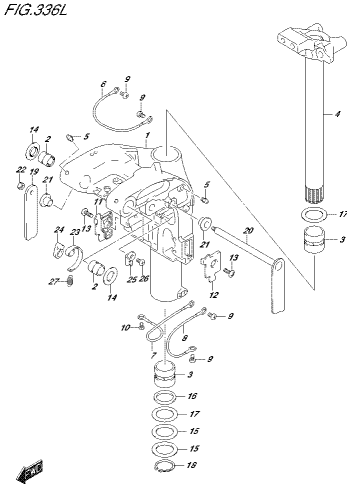

DF60A_E01_018_336L
SWIVEL BRACKET

FIG.337A

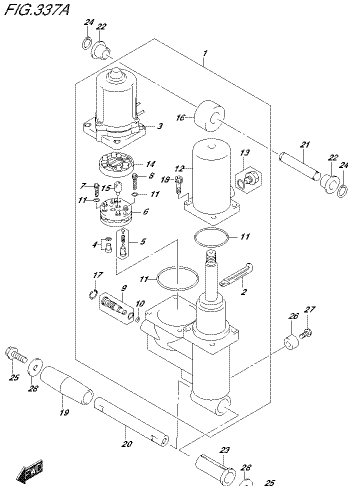

DF60A_E01_018_337A
TRIM CYLINDER

FIG.337B

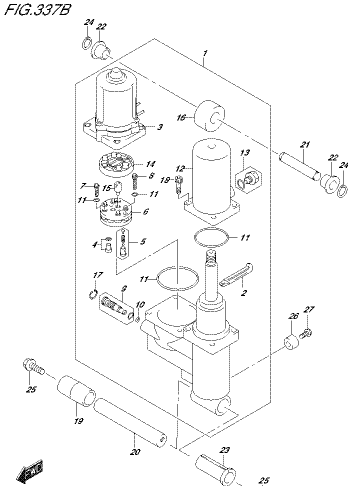

DF60A_E01_018_337B
TRIM CYLINDER

FIG.337C

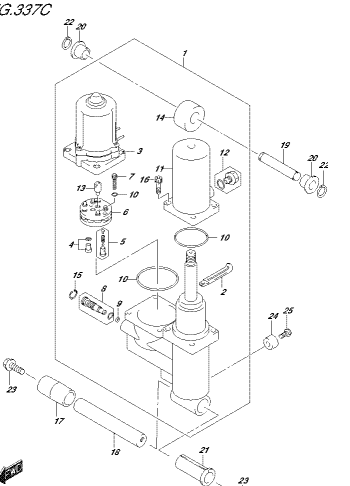

DF60A_E01_018_337C
TRIM CYLINDER

FIG.339A

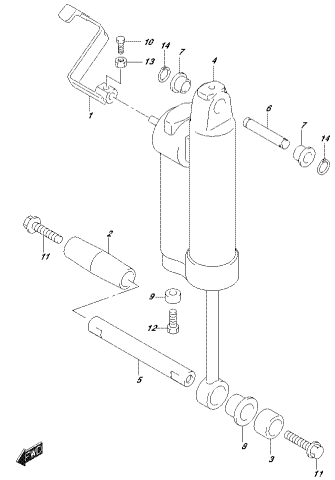

DF90A_E01_018_339A
GAS CYLINDER

FIG.340A

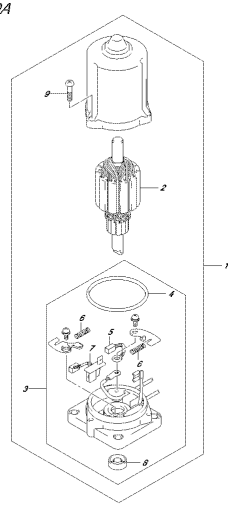

DF90A_E01_018_340A
PTT MOTOR

FIG.340B

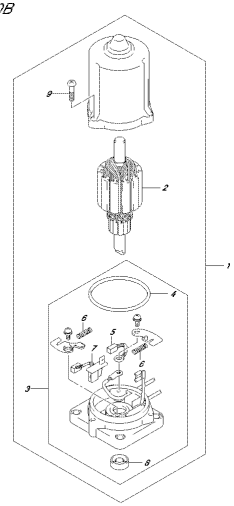

DF90A_E01_018_340B
PTT MOTOR

FIG.401A

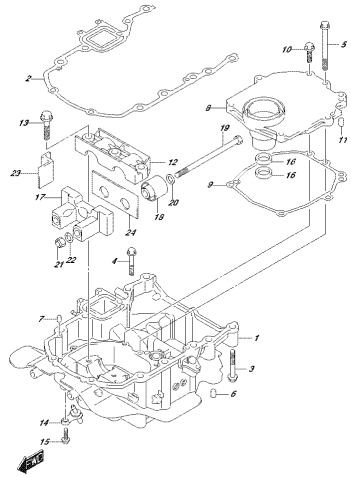

DF90A_E01_018_401A
ENGINE HOLDER

FIG.401B

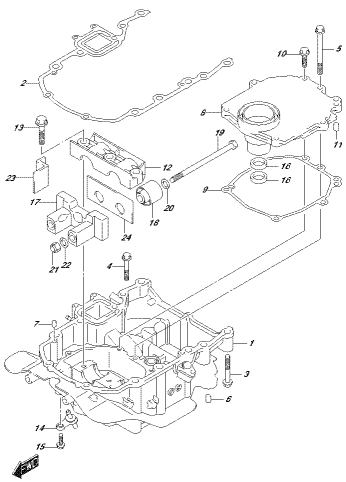

DF90A_E01_018_401B
ENGINE HOLDER

FIG.401C

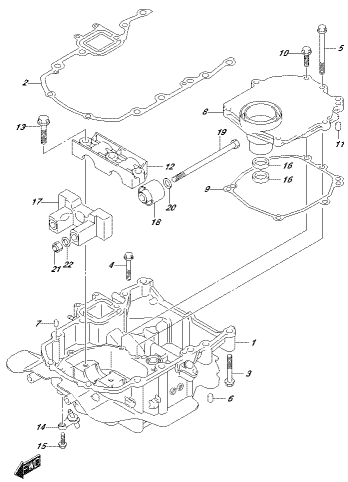

DF90A_E01_018_401C
ENGINE HOLDER

FIG.405A

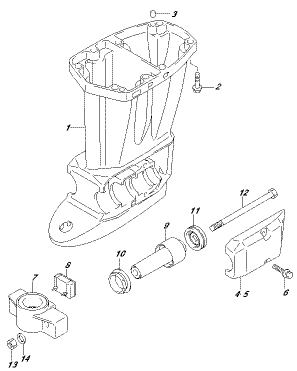

DF90A_E01_018_405A
DRIVE SHAFT HOUSING

FIG.405B

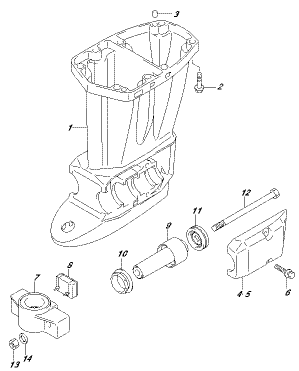

DF90A_E01_018_405B
DRIVE SHAFT HOUSING

FIG.405C

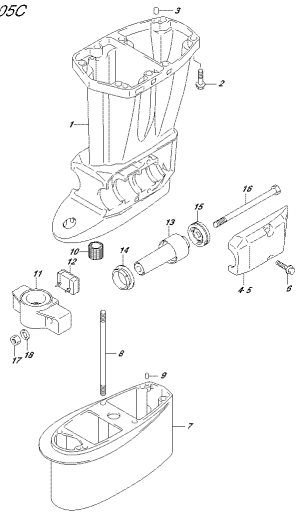

DF60A_E01_018_405C
DRIVE SHAFT HOUSING

FIG.405D

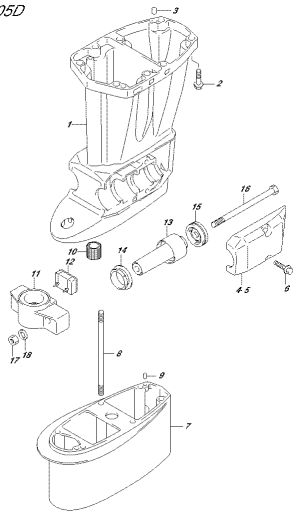

DF60A_E01_018_405D
DRIVE SHAFT HOUSING

FIG.405E

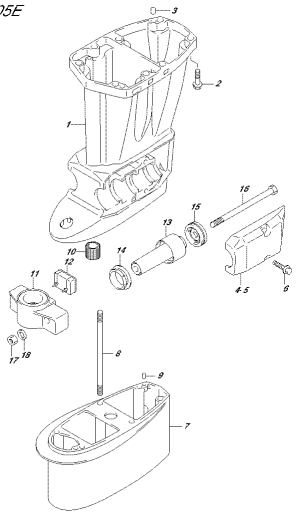

DF60A_E01_018_405E
DRIVE SHAFT HOUSING

FIG.405F

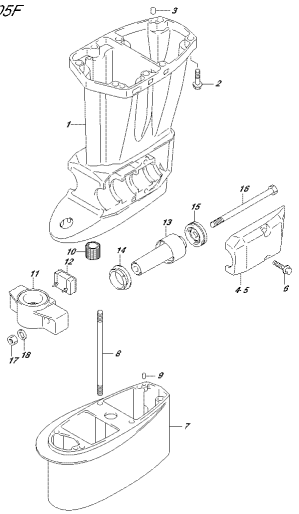

DF60A_E01_018_405F
DRIVE SHAFT HOUSING

FIG.405G

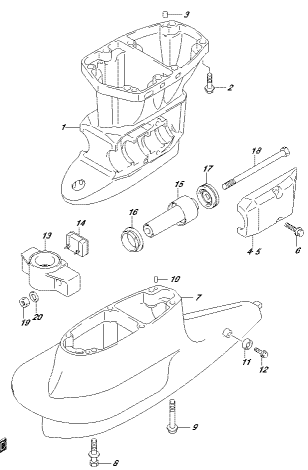

DF60A_E01_018_405G
DRIVE SHAFT HOUSING

FIG.405H

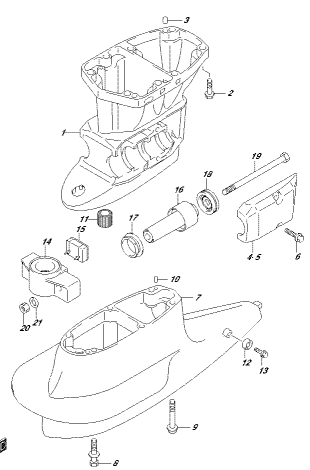

DF60A_E01_018_405H
DRIVE SHAFT HOUSING

FIG.405J

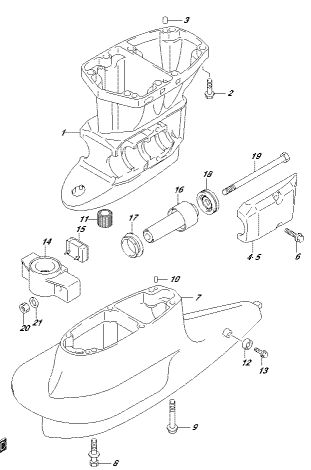

DF60A_E01_018_405J
DRIVE SHAFT HOUSING

FIG.407A

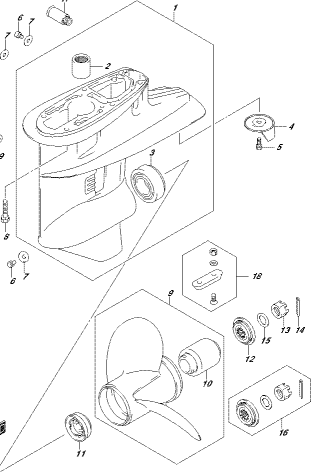

DF60A_E01_018_407A
GEAR CASE

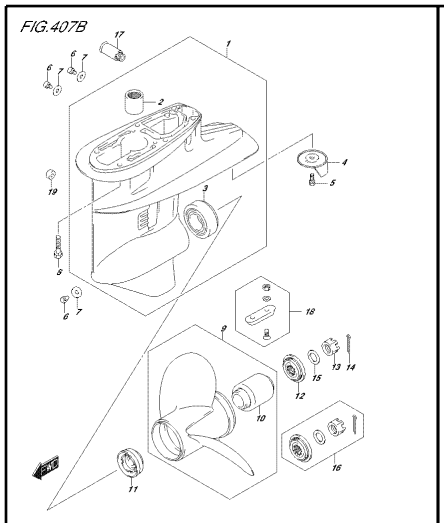
FIG.407B
DF60A_E01_018_407B
GEAR CASE

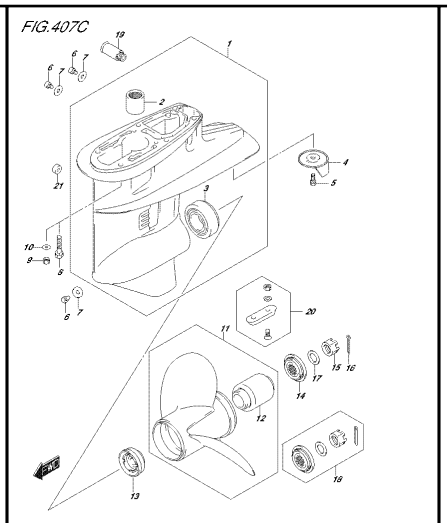
FIG.407C
DF60A_E01_018_407C
GEAR CASE

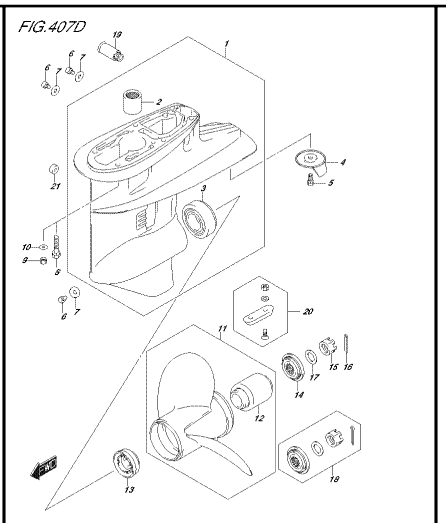
FIG.407D
DF60A_E01_018_407D
GEAR CASE

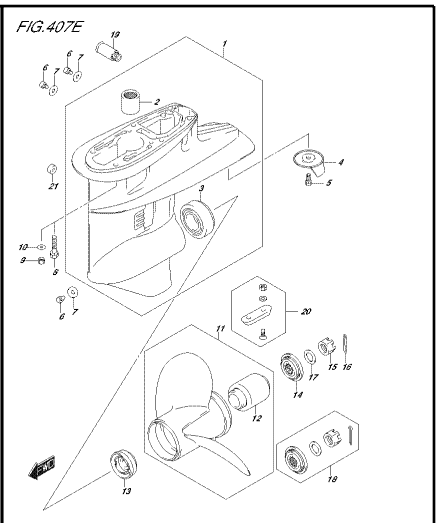
FIG.407E
DF60A_E01_018_407E
GEAR CASE

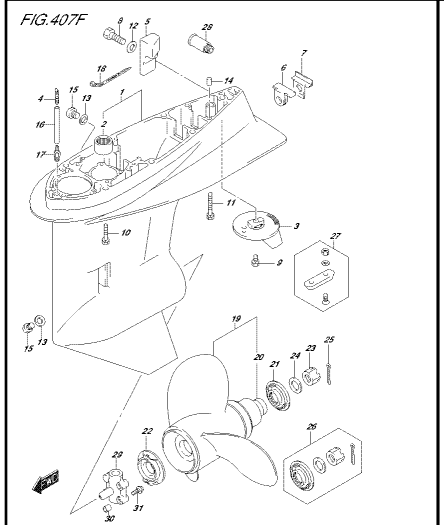
FIG.407F
DF60A_E01_018_407F
GEAR CASE

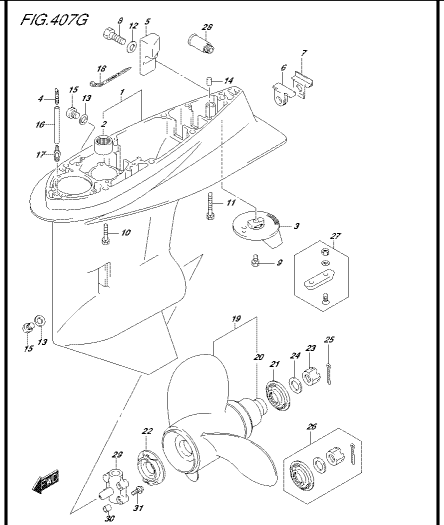
FIG.407G
DF60A_E01_018_407G
GEAR CASE

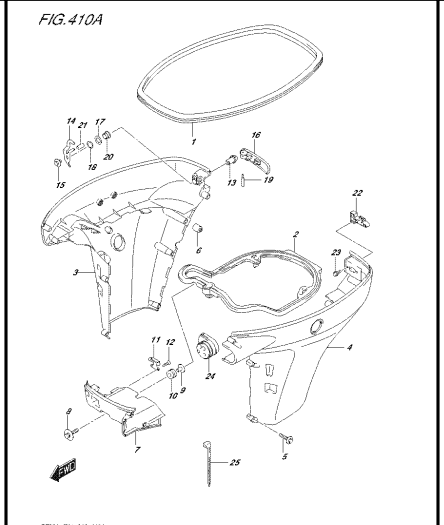
FIG.410A
DF60A_E01_018_410A
SIDE COVER

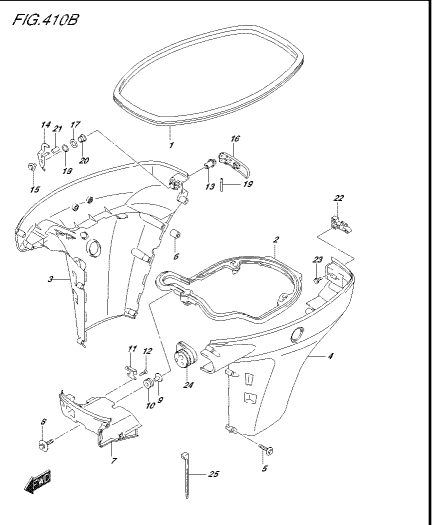
FIG.410B
DF60A_E01_018_410B
SIDE COVER

FIG.410C

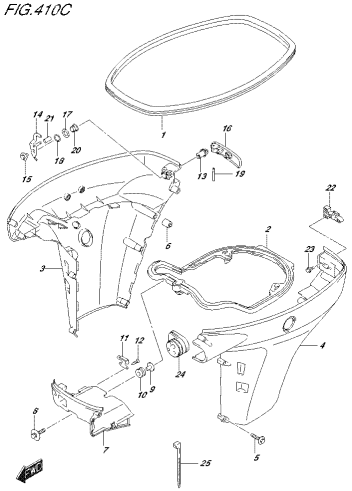

DF90A_E01_018_410C
SIDE COVER

FIG.410D

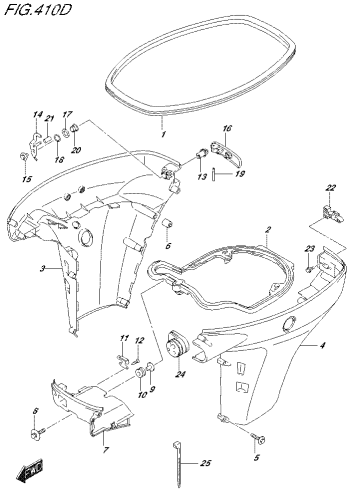

DF90A_E01_018_410D
SIDE COVER

FIG.410E

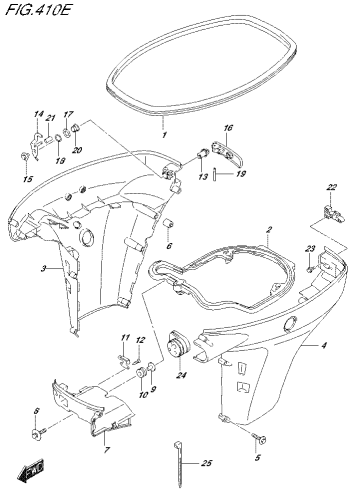

DF90A_E01_018_410E
SIDE COVER

FIG.410F

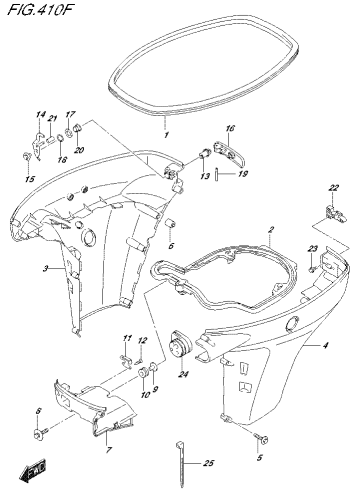

DF90A_E01_018_410F
SIDE COVER

FIG.410G

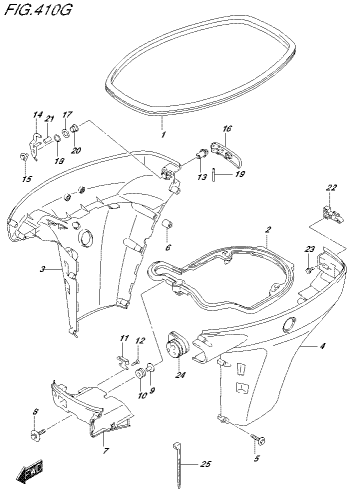

DF90A_E01_018_410G
SIDE COVER

FIG.420A

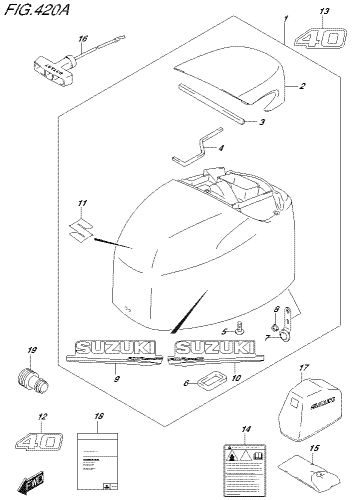

DF90A_E01_018_420A
ENGINE COVER

FIG.420B

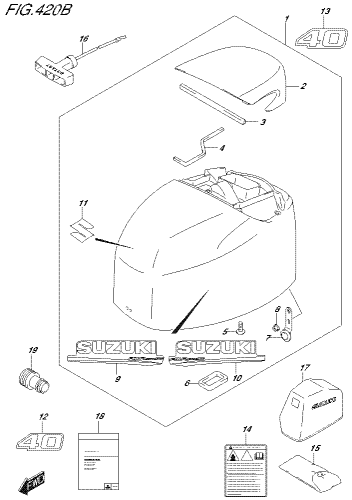

DF90A_E01_018_420B
ENGINE COVER

FIG.420C

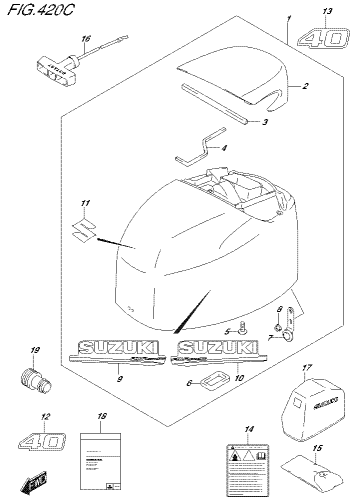

DF90A_E01_018_420C
ENGINE COVER

FIG.420D

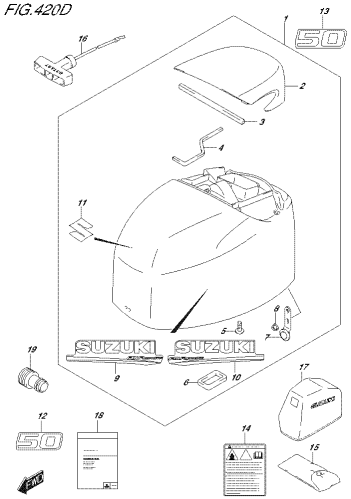

DF60A_E01_018_420D
ENGINE COVER

FIG.420E

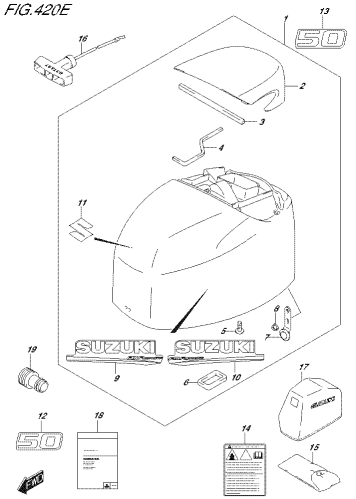

DF60A_E01_018_420E
ENGINE COVER

FIG.420F

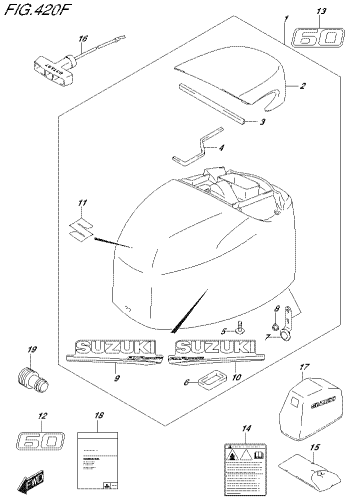

DF60A_E01_018_420F
ENGINE COVER

FIG.420G

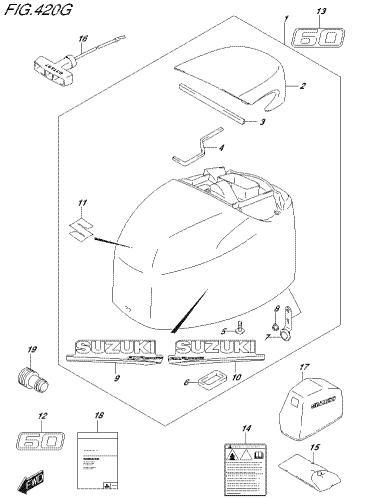

DF60A_E01_018_420G
ENGINE COVER

FIG.420H

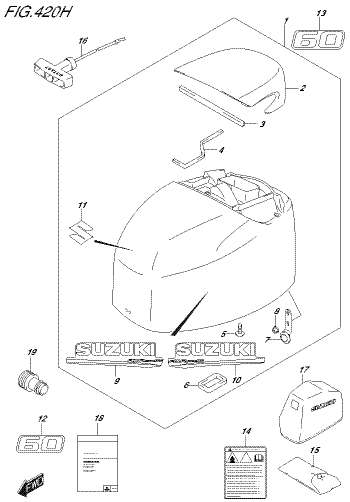

DF60A_E01_018_420H
ENGINE COVER

FIG.420J

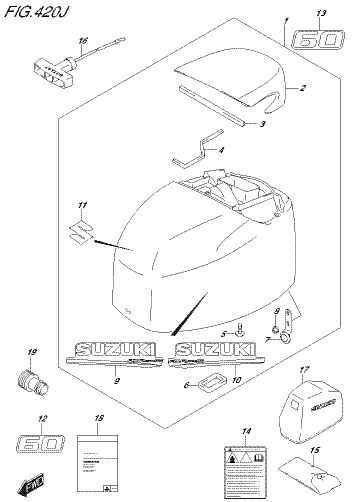

DF60A_E01_018_420J
ENGINE COVER

FIG.432A

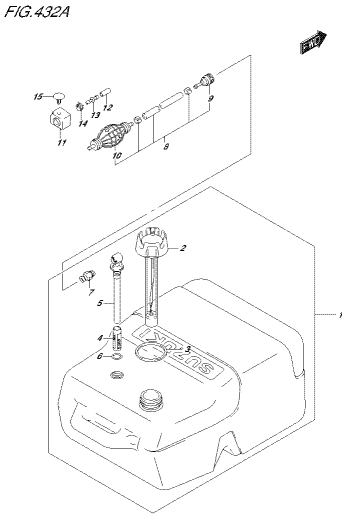

DF60A_E01_018_432A
FUEL TANK

FIG.442A

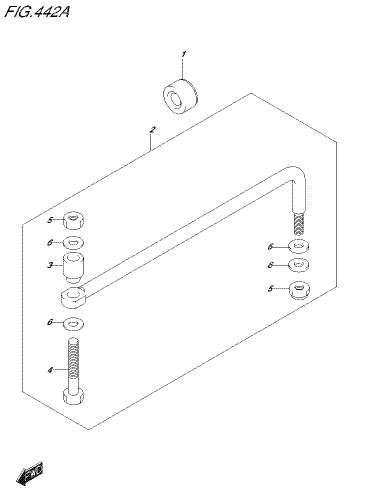

DF60A_E01_018_442A
DRAG LINK

FIG.444A

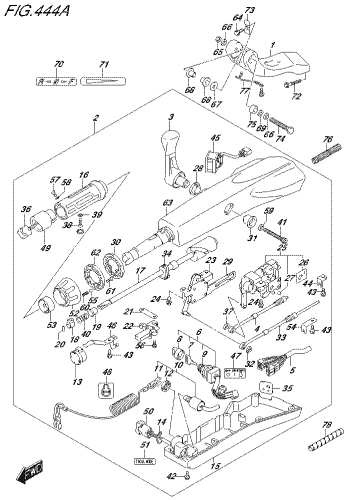

DF60A_E01_018_444A
TILLER HANDLE

FIG.444B

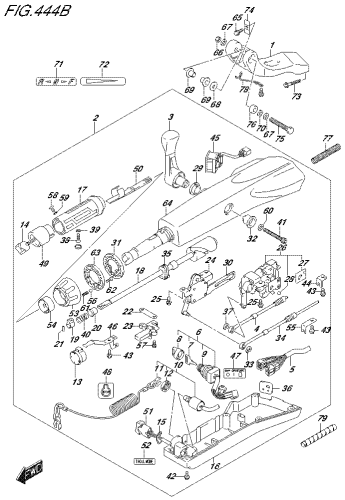

DF60A_E01_018_444B
TILLER HANDLE

FIG.444C

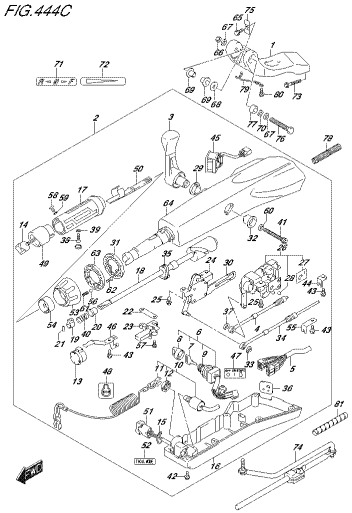

DF60A_E01_018_444C
TILLER HANDLE

FIG.501A

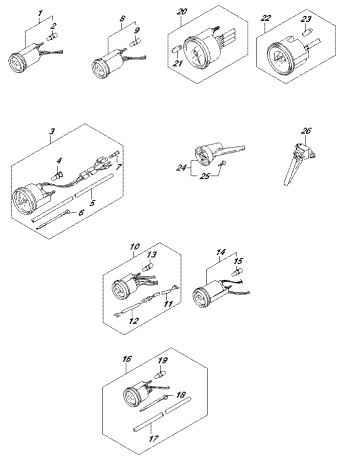

DF60A_E01_018_501A
OPT:METER

FIG.501B

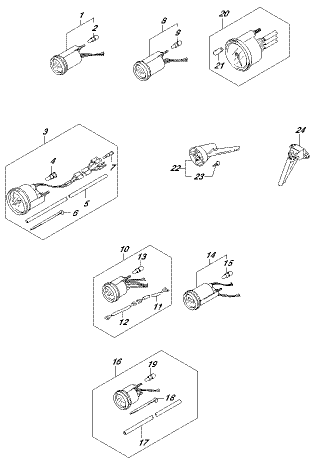

DF60A_E01_018_501B
OPT:METER

FIG.501C

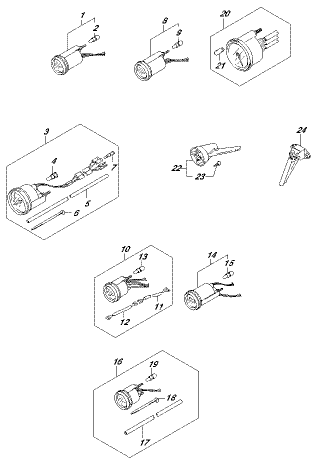

DF60A_E01_018_501C
OPT:METER

FIG.507A

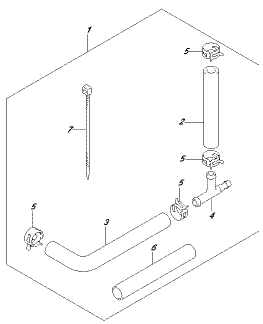

DF60A_E01_018_507A
OPT:WATER PRESSURE GAUGE SUB KIT

FIG.508A

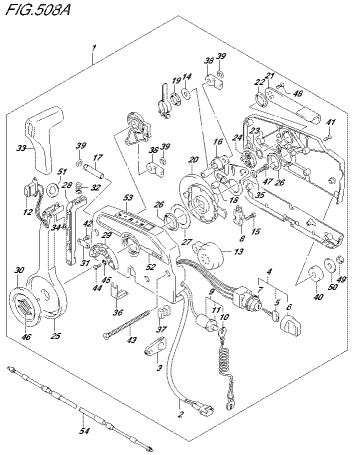

DF60A_E01_018_508A
OPT:REMOTE CONTROL

FIG.515A

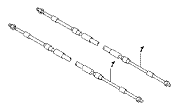

DF90A_E01_018_515A
OPT:REMOCDY CABLE

FIG.515B

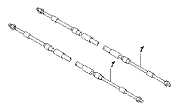

DF90A_E01_018_515B
OPT:REMOCDY CABLE

FIG.521A

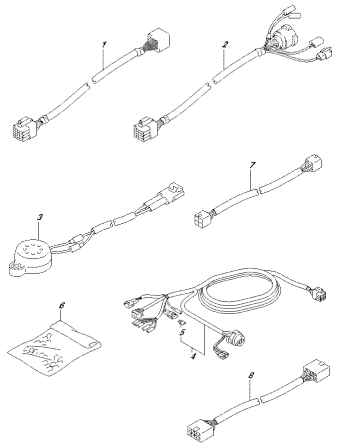

DF90A_E01_018_521A
OPT:HARNESS

FIG.521B

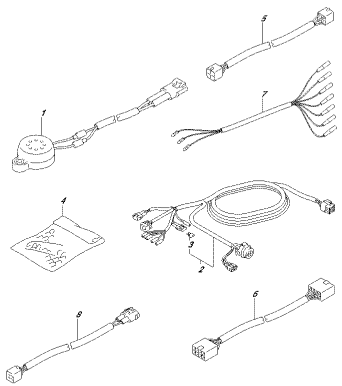

DF90A_E01_018_521B
OPT:HARNESS

FIG.521C

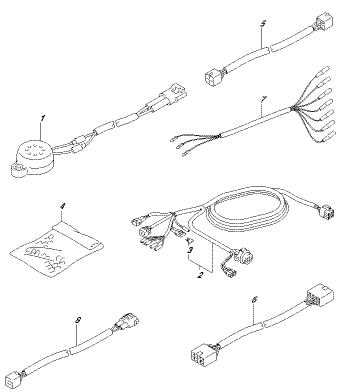

DF90A_E01_018_521C
OPT:HARNESS

FIG.530A

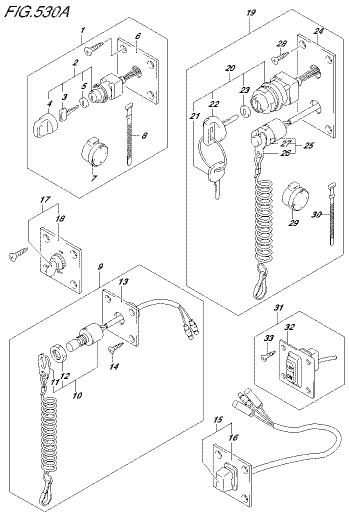

DF90A_E01_018_530A
OPT:SWITCH

FIG.544A

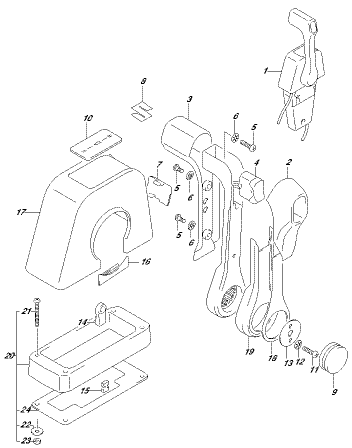

DF90A_E01_018_544A
OPT:REMOTE CONTROL ASSY SINGLE (1)

FIG.545A

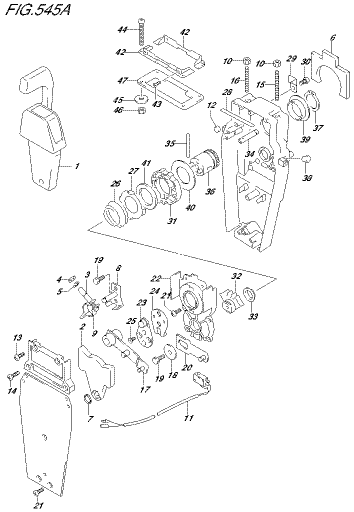

DF90A_E01_018_545A
OPT:REMOTE CONTROL ASSY SINGLE (2)

FIG.570A

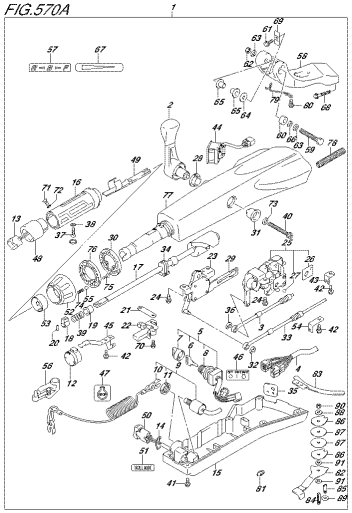

DF60A_E01_018_570A
OPT:TILLER HANDLE

FIG.570B

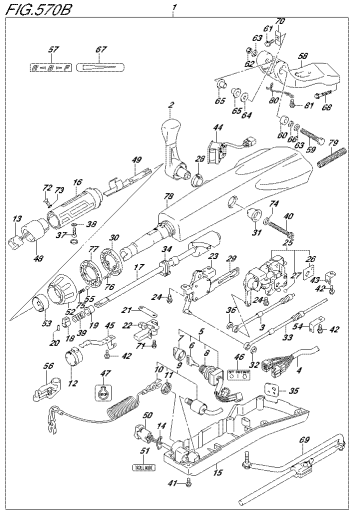

DF60A_E01_018_570B
OPT:TILLER HANDLE

FIG.575A

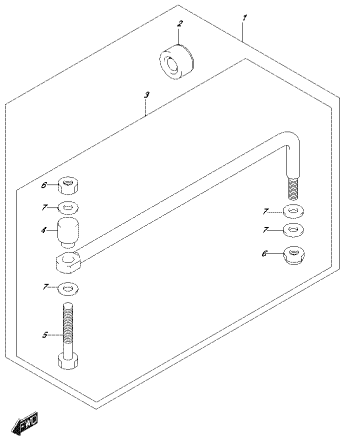

DF60A_E01_018_575A
OPT:DRAG LINK

FIG.575B

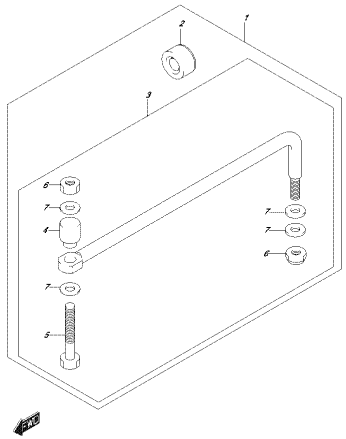

DF60A_E01_018_575B
OPT:DRAG LINK

FIG.585A

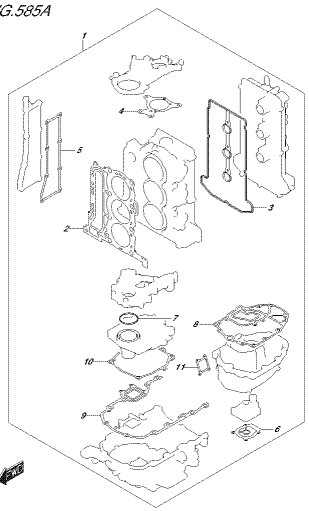

DF60A_E01_018_585A
OPT:GASKET SET

FIG.600A

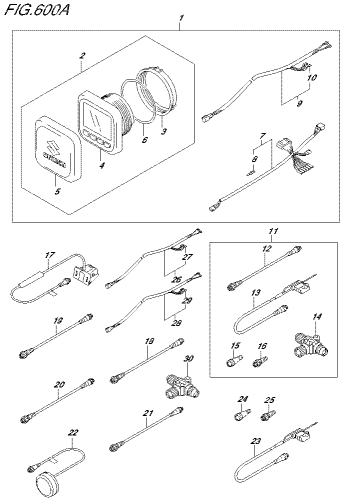

DF60A_E01_018_600A
OPT:MULTI FUNCTION GAUGE

FIG.600B

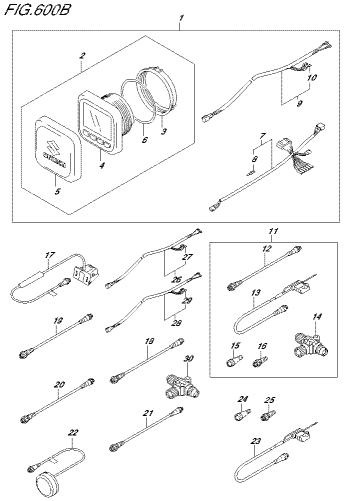

DF60A_E01_018_600B
OPT:MULTI FUNCTION GAUGE

FIG.600C

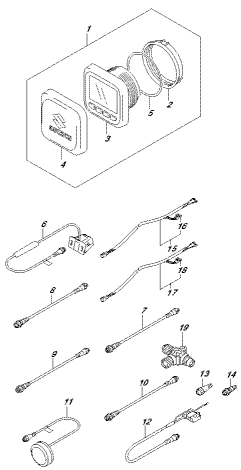

DF60A_E01_018_600C
OPT:MULTI FUNCTION GAUGE

FIG.600D

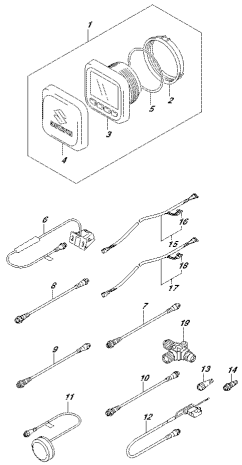

DF8RA_E01_018_R00D
OPT:MULTI FUNCTION GAUGE

FIG.111A

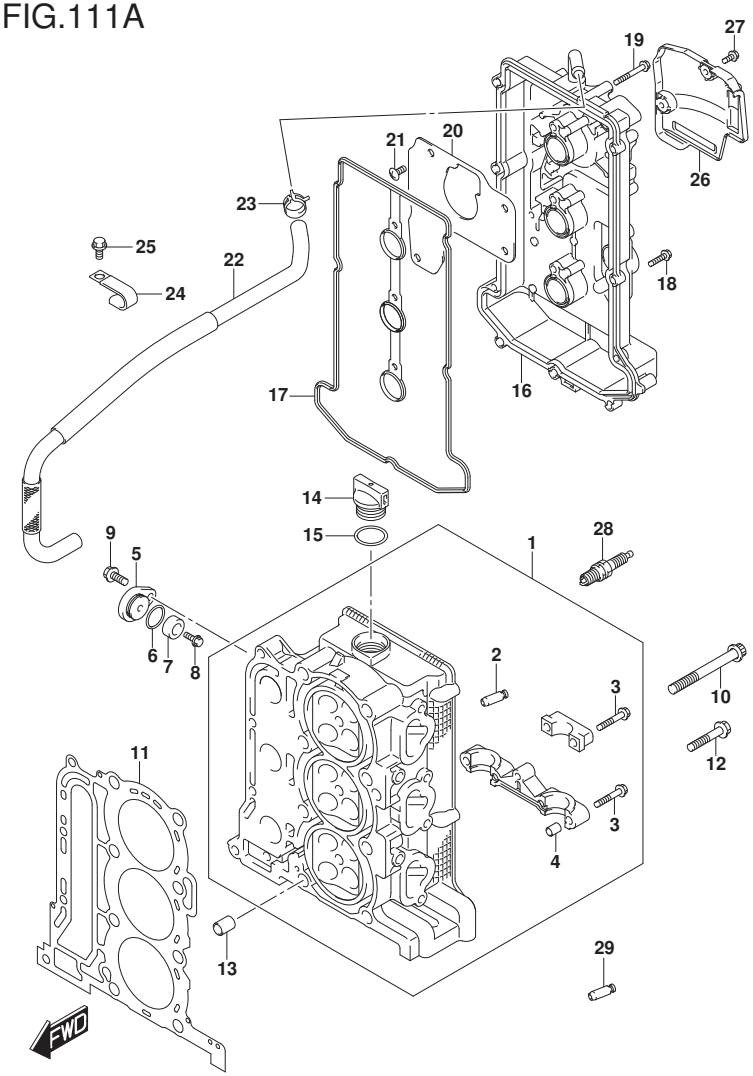

FIG.111A (1-B-2) CYLINDER HEAD (DF40A)(DF40AQH)(DF40ATH)

REF NO.	PART NO.	DESCRIPTION	Q'TY	REMARKS
1	11100-88L10	HEAD ASSY, CYLINDER	1	
2	11115-73G01-001	.GUIDE, VALVE	12	
3	09103-06266	.BOLT (6X40)	17	
4	09206-08001	.PIN (8X11)	14	
5	11261-93J00	COVER, PROTECTION ANODE	2	
6	09280-22019	O RING (D:1.9,ID:21.8)	2	
7-1	55321-87J01	ANODE, PROTECTION	2	
7-2	55321-87J11	ANODE (MAGNESIUM)	1	OPT
8	09103-06281	BOLT (6X14)	2	
9	01550-0820C	BOLT	2	
10	11119-87J00	BOLT, CYLINDER HEAD (10X95)	8	
11	11141-88L00	GASKET, CYLINDER HEAD	1	
12	01550-08457	BOLT	4	
13	04211-13189	PIN	2	
14	11382-93J00	CAP, OIL FILLER	1	
15	09280-26006	O RING (D:3.1,ID:26.4)	1	
16	11170-88L10	COVER, CYLINDER HEAD	1	
17	11189-88L00	GASKET, CYLINDER HEAD COVER	1	
18	01547-0625C	BOLT	9	
19	01547-0645C	BOLT	3	
20	11173-88L00	PLATE, BREATHER	1	
21	02142-0612A	SCREW	4	
22	11174-88L00	HOSE, BREATHER	1	
23	09401-15414	CLIP	2	
24	09403-17303	CLAMP	2	
25	01550-0612C	BOLT	2	
26	11194-88L10	GUARD, FUEL HOSE	1	
27	01550-0616C	BOLT	2	

DF60A_E01_018_111A
CYLINDER HEAD

FIG.111A

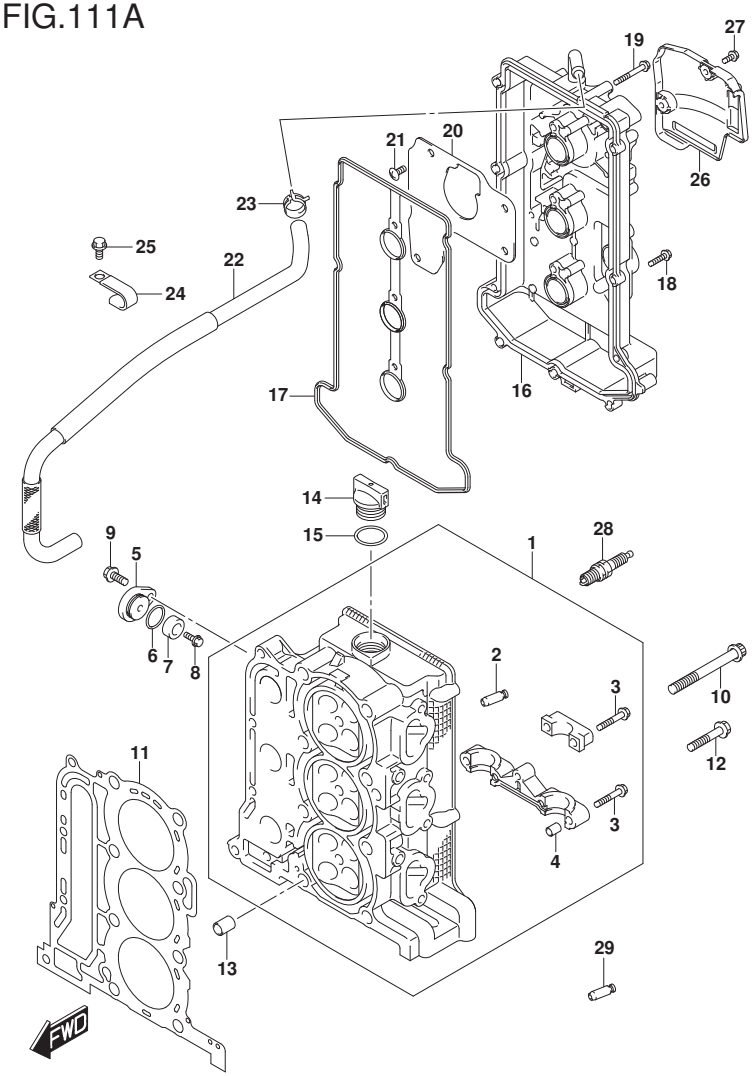

FIG.111A (1-B-3) CYLINDER HEAD (DF40A)(DF40AQH)(DF40ATH)

REF NO.	PART NO.	DESCRIPTION	Q'TY	REMARKS
28	09482-00446	SPARK PLUG (DCPR6E)	3	NGK
29	11115-73G01-001	GUIDE, VALVE (OS)	4	OPT

DF40A E01
DF40AQH E01
DF40ATH E01

DF60A_E01_018_111A
CYLINDER HEAD

FIG.111B

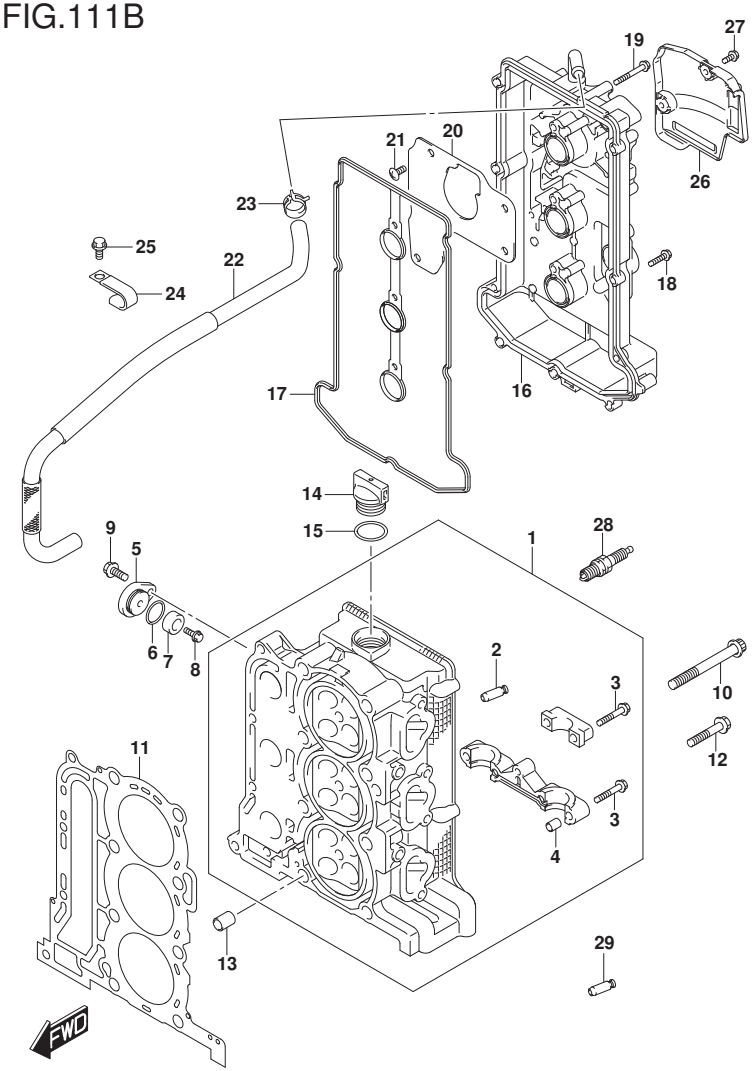

FIG.111B (1-B-4) CYLINDER HEAD (DF40AST)(DF60A)(DF60AQH)(DF60ATH)

REF NO.	PART NO.	DESCRIPTION	Q'TY	REMARKS
1	11100-88L10	HEAD ASSY, CYLINDER	1	
2	11115-73G01-001	.GUIDE, VALVE	12	
3	09103-06266	.BOLT (6X40)	17	
4	09206-08001	.PIN (8X11)	14	
5	11261-93J00	COVER, PROTECTION ANODE	2	
6	09280-22019	O RING (D:1.9,ID:21.8)	2	
7-1	55321-87J01	ANODE, PROTECTION	2	
7-2	55321-87J11	ANODE (MAGNESIUM)	1	OPT
8	09103-06281	BOLT (6X14)	2	
9	01550-0820C	BOLT	2	
10	11119-87J00	BOLT, CYLINDER HEAD (10X95)	8	
11	11141-88L00	GASKET, CYLINDER HEAD	1	
12	01550-08457	BOLT	4	
13	04211-13189	PIN	2	
14	11382-93J00	CAP, OIL FILLER	1	
15	09280-26006	O RING (D:3.1,ID:26.4)	1	
16	11170-88L10	COVER, CYLINDER HEAD	1	
17	11189-88L00	GASKET, CYLINDER HEAD COVER	1	
18	01547-0625C	BOLT	9	
19	01547-0645C	BOLT	3	
20	11173-88L00	PLATE, BREATHER	1	
21	02142-0612A	SCREW	4	
22	11174-88L00	HOSE, BREATHER	1	
23	09401-15414	CLIP	1	

DF60A_E01_018_111B
CYLINDER HEAD

FIG.111B

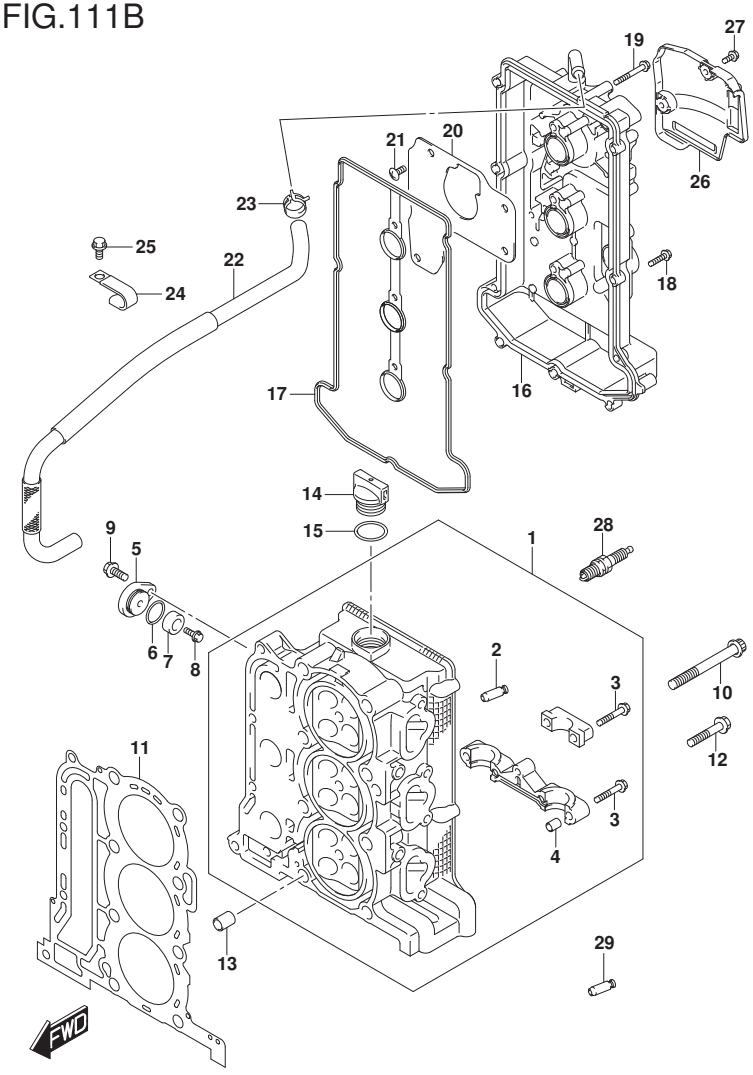

FIG.111B (1-B-5) CYLINDER HEAD (DF40AST)(DF60A)(DF60AQH)(DF60ATH)

REF NO.	PART NO.	DESCRIPTION	Q'TY	REMARKS
24	09403-17303	CLAMP	2	
25	01550-0612C	BOLT	2	
26	11194-88L10	GUARD, FUEL HOSE	1	
27	01550-0616C	BOLT	2	
28	09482-00446	SPARK PLUG (DCPR6E)	3	NGK
29	11115-73G01-001	GUIDE, VALVE (OS)	4	OPT

DF40AST E34
DF60A E01
DF60A E40
DF60AQH E01
DF60AQH E40
DF60ATH E01
DF60ATH E40

FIG.111C

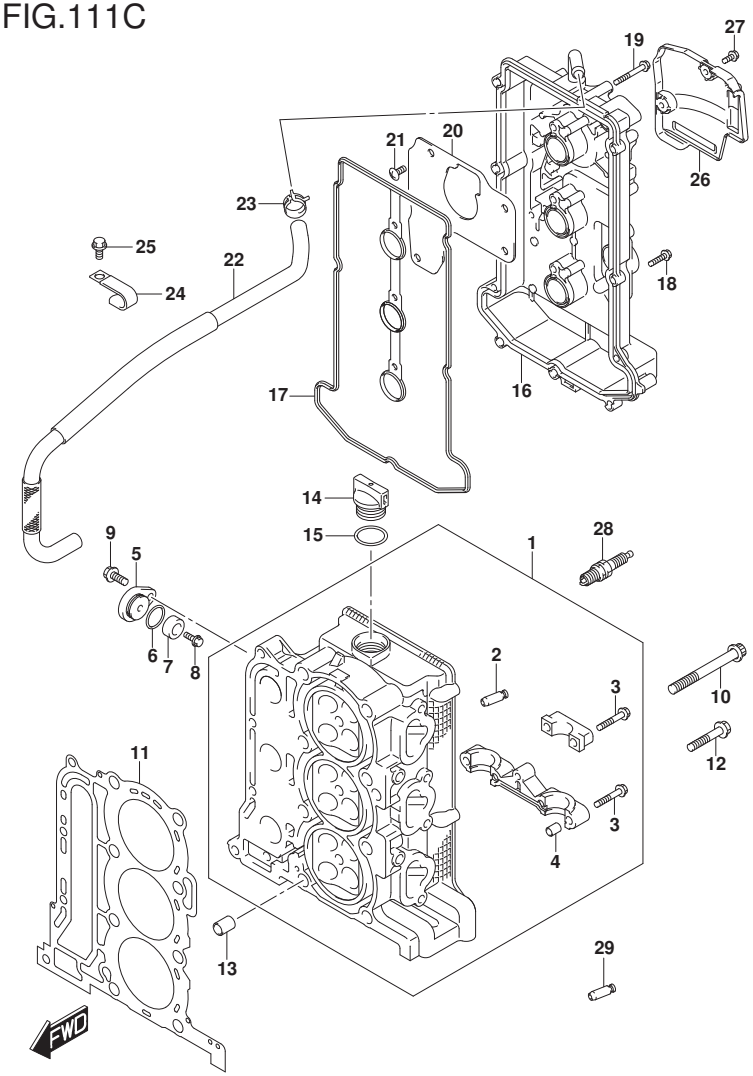

FIG.111C (1-B-6) CYLINDER HEAD (DF50A)(DF50ATH)(DF50AVT)(DF50AVTH)

REF NO.	PART NO.	DESCRIPTION	Q'TY	REMARKS
1	11100-88L10	HEAD ASSY, CYLINDER	1	
2	11115-73G01-001	.GUIDE, VALVE	12	
3	09103-06266	.BOLT (6X40)	17	
4	09206-08001	.PIN (8X11)	14	
5	11261-93J00	COVER, PROTECTION ANODE	2	
6	09280-22019	O RING (D:1.9,ID:21.8)	2	
7-1	55321-87J01	ANODE, PROTECTION	2	
7-2	55321-87J11	ANODE (MAGNESIUM)	1	OPT
8	09103-06281	BOLT (6X14)	2	
9	01550-0820C	BOLT	2	
10	11119-87J00	BOLT, CYLINDER HEAD (10X95)	8	
11	11141-88L00	GASKET, CYLINDER HEAD	1	
12	01550-08457	BOLT	4	
13	04211-13189	PIN	2	
14	11382-93J00	CAP, OIL FILLER	1	
15	09280-26006	O RING (D:3.1,ID:26.4)	1	
16	11170-88L10	COVER, CYLINDER HEAD	1	
17	11189-88L00	GASKET, CYLINDER HEAD COVER	1	
18	01547-0625C	BOLT	9	
19	01547-0645C	BOLT	3	
20	11173-88L00	PLATE, BREATHER	1	
21	02142-0612A	SCREW	4	
22	11174-88L00	HOSE, BREATHER	1	
23	09401-15414	CLIP	2	
24	09403-17303	CLAMP	2	
25	01550-0612C	BOLT	2	
26	11194-88L10	GUARD, FUEL HOSE	1	

DF60A_E01_018_111C
CYLINDER HEAD

FIG.111C

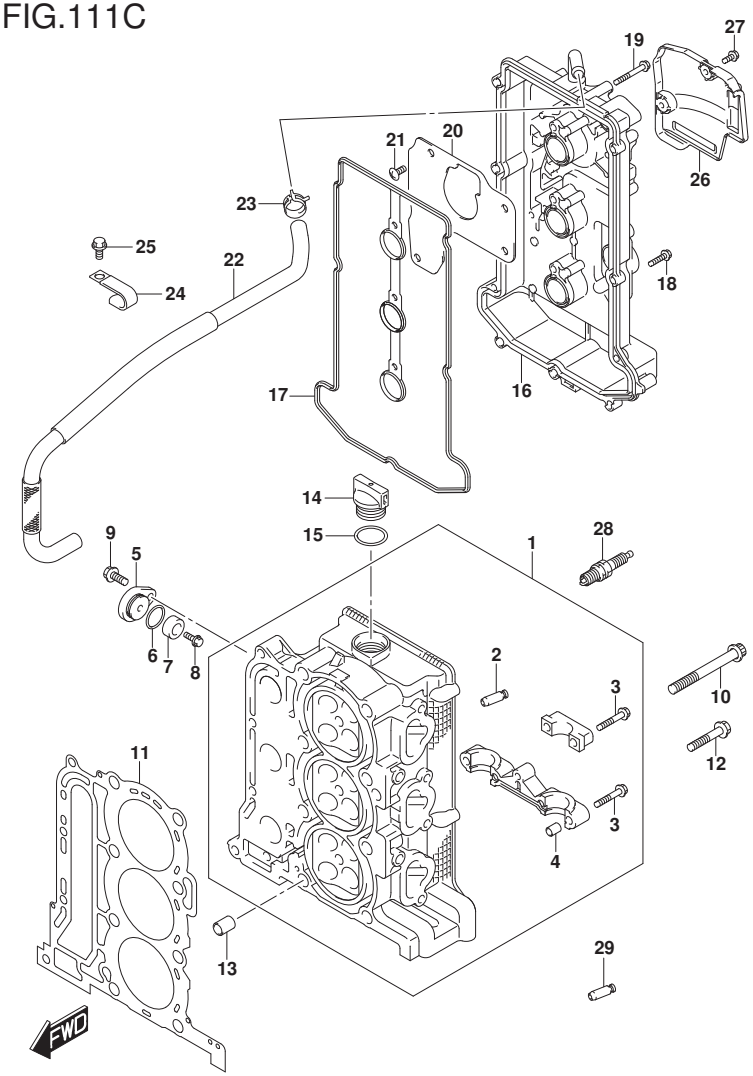

FIG.111C (1-B-7) CYLINDER HEAD (DF50A)(DF50ATH)(DF50AVT)(DF50AVTH)

REF NO.	PART NO.	DESCRIPTION	Q'TY	REMARKS
27	01550-0616C	BOLT	2	
28	09482-00446	SPARK PLUG (DCPR6E)	3	NGK
29	11115-73G01-001	GUIDE, VALVE (OS)	4	OPT

DF50A E01
DF50ATH E01
DF50AVT E01
DF50AVTH E01

DF60A_E01_018_111C
CYLINDER HEAD

FIG.111D

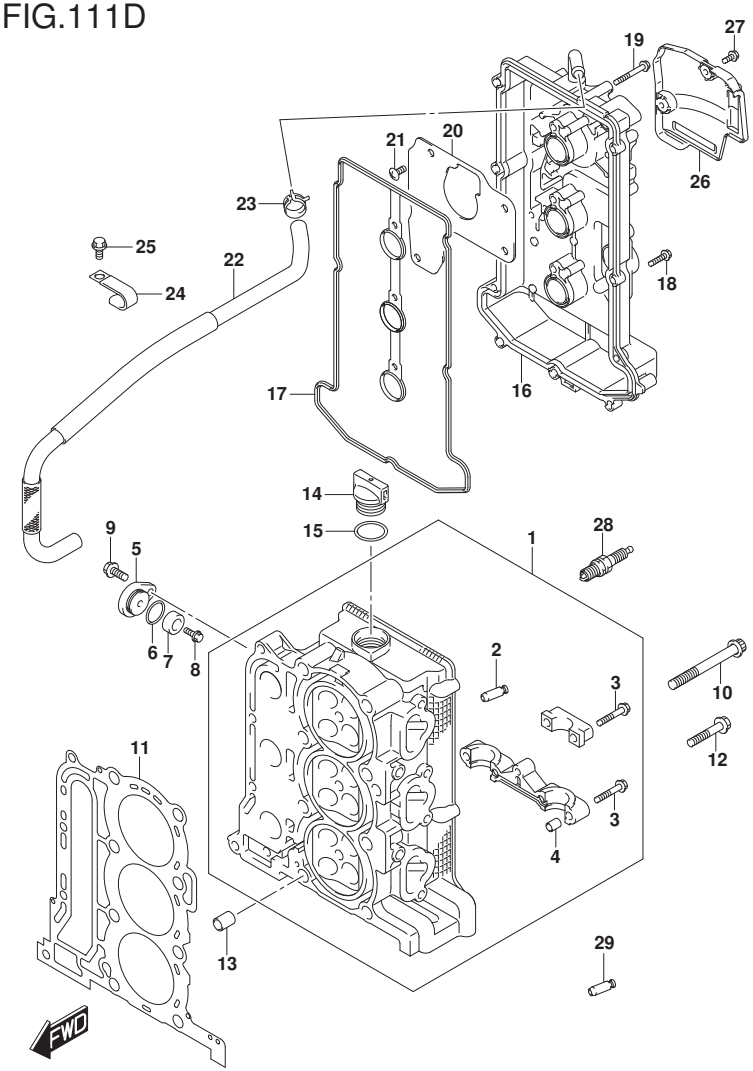

FIG.111D (1-B-8) CYLINDER HEAD (DF60AVT)(DF60AVTH)

REF NO.	PART NO.	DESCRIPTION	Q'TY	REMARKS
1	11100-88L10	HEAD ASSY, CYLINDER	1	
2	11115-73G01-001	.GUIDE, VALVE	12	
3	09103-06266	.BOLT (6X40)	17	
4	09206-08001	.PIN (8X11)	14	
5	11261-93J00	COVER, PROTECTION ANODE	2	
6	09280-22019	O RING (D:1.9,ID:21.8)	2	
7-1	55321-87J01	ANODE, PROTECTION	2	
7-2	55321-87J11	ANODE (MAGNESIUM)	1	OPT
8	09103-06281	BOLT (6X14)	2	
9	01550-0820C	BOLT	2	
10	11119-87J00	BOLT, CYLINDER HEAD (10X95)	8	
11	11141-88L00	GASKET, CYLINDER HEAD	1	
12	01550-08457	BOLT	4	
13	04211-13189	PIN	2	
14	11382-93J00	CAP, OIL FILLER	1	
15	09280-26006	O RING (D:3.1,ID:26.4)	1	
16	11170-88L10	COVER, CYLINDER HEAD	1	
17	11189-88L00	GASKET, CYLINDER HEAD COVER	1	
18	01547-0625C	BOLT	9	
19	01547-0645C	BOLT	3	
20	11173-88L00	PLATE, BREATHER	1	
21	02142-0612A	SCREW	4	
22	11174-88L00	HOSE, BREATHER	1	
23	09401-15414	CLIP	1	
24	09403-17303	CLAMP	2	
25	01550-0612C	BOLT	2	
26	11194-88L10	GUARD, FUEL HOSE	1	

DF60A_E01_018_111D
CYLINDER HEAD

FIG.111D

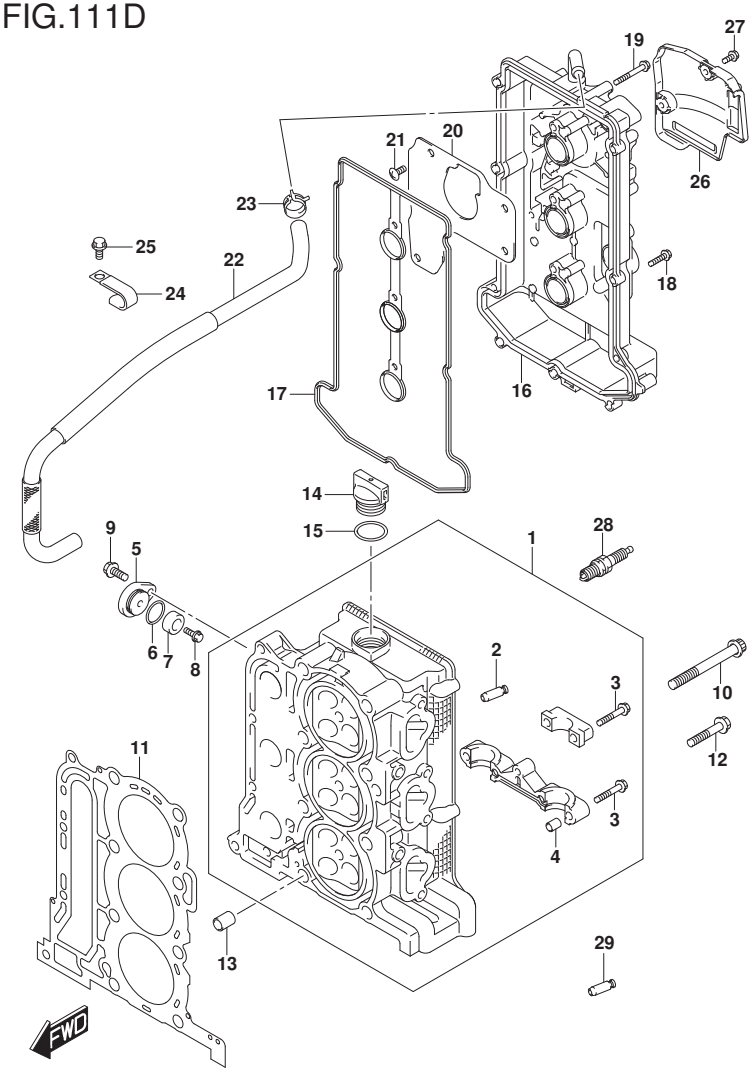

FIG.111D (1-B-9) CYLINDER HEAD (DF60AVT)(DF60AVTH)

REF NO.	PART NO.	DESCRIPTION	Q'TY	REMARKS
27	01550-0616C	BOLT	2	
28	09482-00446	SPARK PLUG (DCPR6E)	3	NGK
29	11115-73G01-001	GUIDE, VALVE (OS)	4	OPT

DF60AVT E01
DF60AVT E40
DF60AVTH E01
DF60AVTH E40

FIG.113A

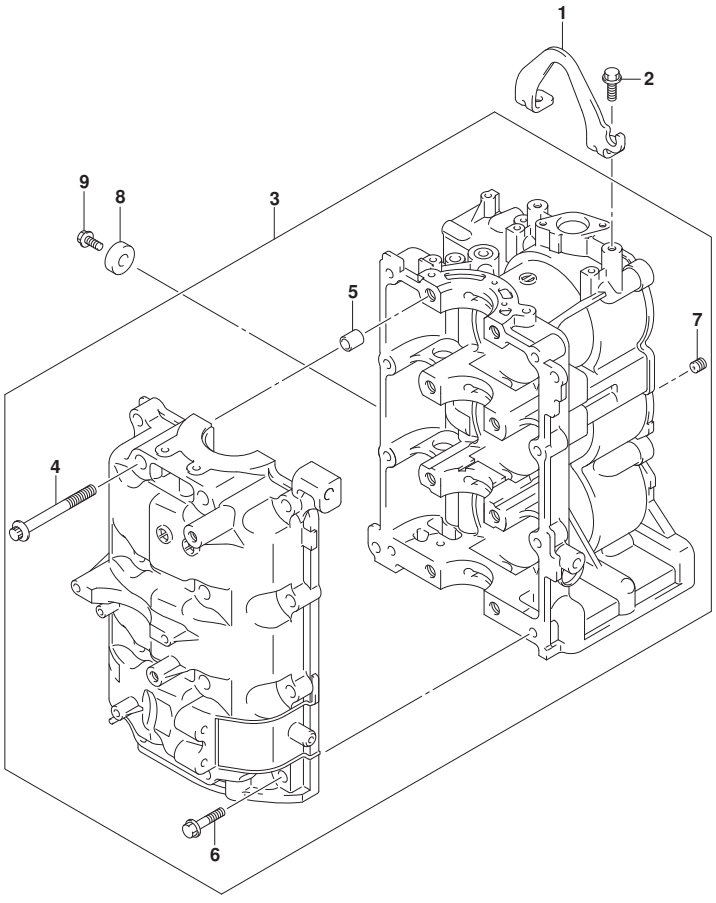

FIG.113A (1-B-10) CYLINDER BLOCK

REF NO.	PART NO.	DESCRIPTION	Q'TY	REMARKS
1	11291-88L00	HOOK, ENGINE	1	
2	01550-0820C	BOLT	2	
3	11301-88L10	BLOCK ASSY, CYLINDER	1	
4	11117-89J20	.BOLT, CRANKCASE INSIDE	8	
5	09206-13019	.PIN (10.4X13X16)	4	
6	01550-08407	.BOLT	8	
7	11112-88L00	.PLUG, OIL VENTURI	1	
8	55321-87J01	ANODE, PROTECTION	1	
9	09103-06281	BOLT (6X14)	1	

DF60A_E01_018_113A
CYLINDER BLOCK

FIG.116A

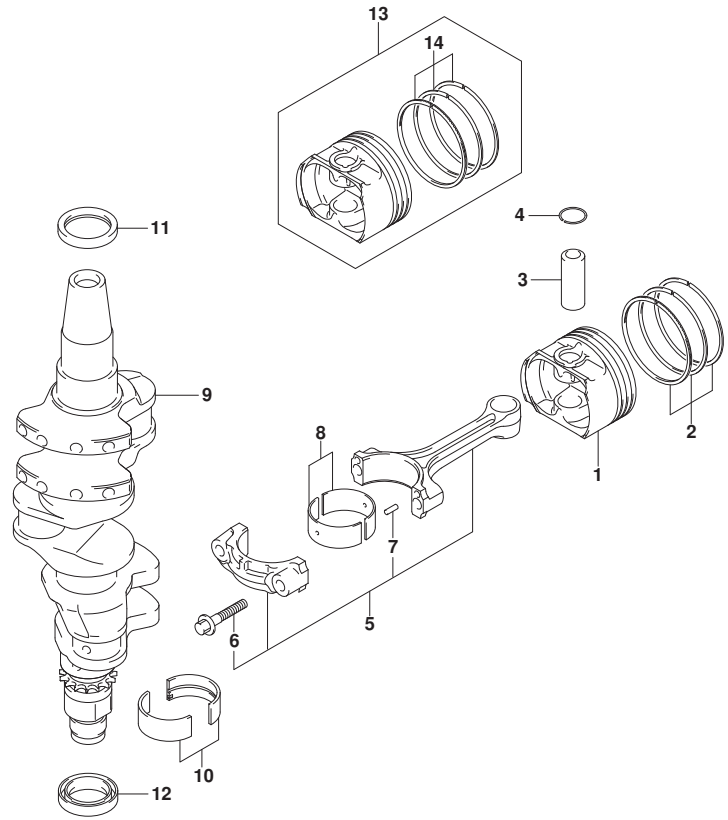

FIG.116A (1-B-11) CRANKSHAFT

REF NO.	PART NO.	DESCRIPTION	Q'TY	REMARKS
1	12111-88L00	PISTON	3	
2	12140-88L01	RING SET, PISTON	3	
3	12151-54A50	PIN, PISTON	3	
4	09381-18002	SNAP RING	6	
5	12160-88L01	CONNROD ASSY	3	
6	12163-69J00	.BOLT, CONNROD	6	
7	04221-04089	.PIN	6	
8-1	12100-51810-0A0	BEARING SET, CONNROD (GREEN)	3	
8-2	12100-51810-0B0	BEARING SET, CONNROD (BLACK)	3	
8-3	12100-51810-0C0	BEARING SET, CONNROD (NON)	3	
8-4	12100-51810-0D0	BEARING SET, CONNROD (YELLOW)	3	
8-5	12100-51810-0E0	BEARING SET, CONNROD (BLUE)	3	
9	12220-88L00	CRANKSHAFT	1	
10-1	12340-75FA0-0A0	BEARING SET, CRANKSHAFT	4	GREEN
10-2	12340-75FA0-0B0	BEARING SET, CRANKSHAFT	4	BLACK
10-3	12340-75F00-0C0	BEARING SET, CRANKSHAFT	4	NON
10-4	12340-75F00-0D0	BEARING SET, CRANKSHAFT	4	YELLOW
10-5	12340-75F00-0E0	BEARING SET, CRANKSHAFT	4	BLUE
11	09283-37005	OIL SEAL (37X49X6)	1	
12	12281-87J00	SEAL, LOWER OIL (29.3X44X7)	1	
13	12100-88L01-050	PISTON SET (OS:0.50)	3	OPT
14	12140-88L01-050	.RING SET, PISTON (OS:0.50)	3	OPT

FIG.119A

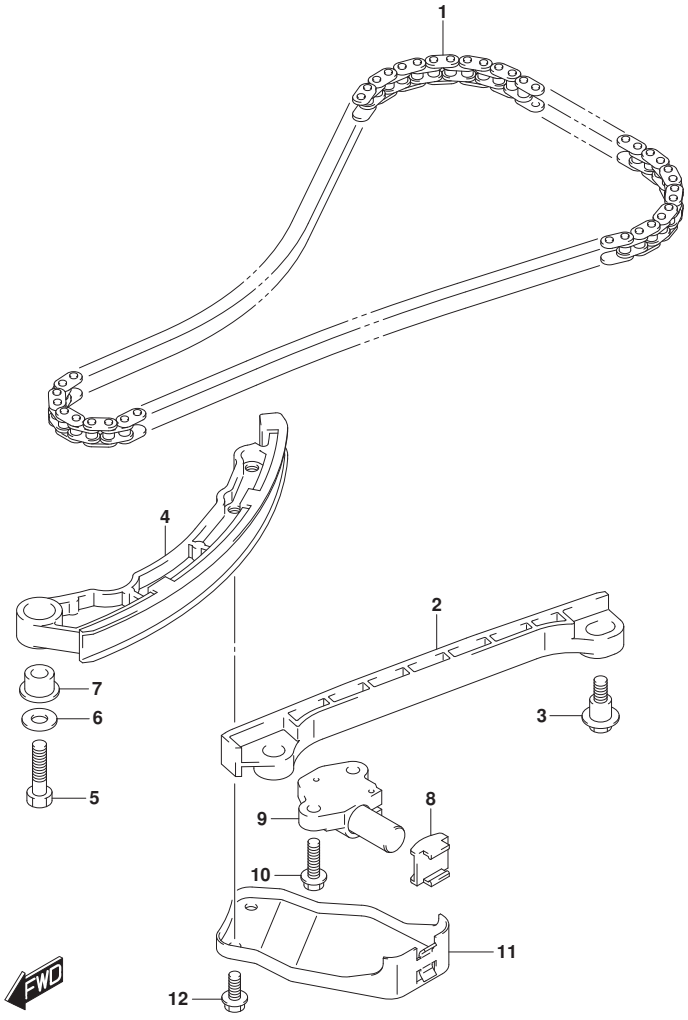

FIG.119A (1-B-12) TIMING CHAIN

REF NO.	PART NO.	DESCRIPTION	Q'TY	REMARKS
1	12761-88L00	CHAIN, TIMING	1	
2	12771-87J00	GUIDE, TIMING CHAIN NO.1	1	
3	12776-85FA0	BOLT, TIMING CHAIN GUIDE	2	
4	12811-88L00	TENSIONER, TIMING CHAIN	1	
5	09100-08260	BOLT (8X30)	1	
6	09160-08123	WASHER (8.5X20X1.2)	1	
7	12812-73G10	SPACER, TIMING CHAIN TENSIONER	1	
8	12813-73G00	PAD, TIMING CHAIN TENSIONER	1	
9	12831-90J02	ADJUSTER ASSY, TENSIONER	1	
10	01550-0620A	BOLT	2	
11	12821-88L00	LINK, TIMING CHAIN TENSIONER	1	
12	01550-0612A	BOLT	2	

DF60A_E01_018_119A
TIMING CHAIN

FIG.121A

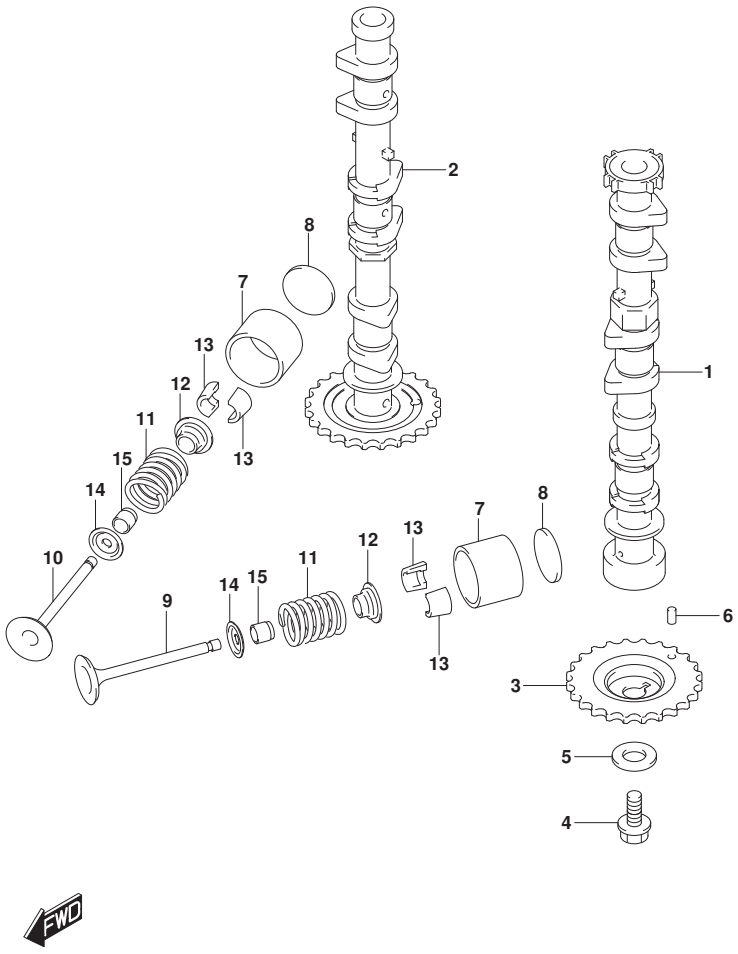

FIG.121A (1-B-13) CAMSHAFT

REF NO.	PART NO.	DESCRIPTION	Q'TY	REMARKS
1	12710-88L00	CAMSHAFT, INTAKE	1	
2	12720-88L00	CAMSHAFT, EXHAUST (NT:34)	1	
3	12741-88L00	SPROCKET, CAMSHAFT TIMING (NT:34)	1	
4	09103-10189	BOLT (10X23)	1	
5	09160-10093	WASHER (10.5X24X2.3)	1	
6	04221-05109	PIN	1	
7	12891-73G01	TAPPET	12	
8-1	12892-73G01-218	SHIM, TAPPET (T:2.18)	AR	OPT
8-2	12892-73G01-220	SHIM, TAPPET (T:2.20)	AR	OPT
8-3	12892-73G01-222	SHIM, TAPPET (T:2.22)	AR	OPT
8-4	12892-73G01-224	SHIM, TAPPET (T:2.24)	AR	OPT
8-5	12892-73G01-226	SHIM, TAPPET (T:2.26)	AR	OPT
8-6	12892-73G01-228	SHIM, TAPPET (T:2.28)	AR	OPT
8-7	12892-73G01-230	SHIM, TAPPET (T:2.30)	AR	
8-8	12892-73G01-232	SHIM, TAPPET (T:2.32)	AR	
8-9	12892-73G01-234	SHIM, TAPPET (T:2.34)	AR	
8-10	12892-73G01-236	SHIM, TAPPET (T:2.36)	AR	
8-11	12892-73G01-238	SHIM, TAPPET (T:2.38)	AR	
8-12	12892-73G01-240	SHIM, TAPPET (T:2.40)	AR	
8-13	12892-73G01-242	SHIM, TAPPET (T:2.42)	AR	
8-14	12892-73G01-244	SHIM, TAPPET (T:2.44)	AR	
8-15	12892-73G01-246	SHIM, TAPPET (T:2.46)	AR	
8-16	12892-73G01-248	SHIM, TAPPET (T:2.48)	AR	
8-17	12892-73G01-250	SHIM, TAPPET (T:2.50)	AR	
8-18	12892-73G01-252	SHIM, TAPPET (T:2.52)	AR	
8-19	12892-73G01-254	SHIM, TAPPET (T:2.54)	AR	
8-20	12892-73G01-256	SHIM, TAPPET (T:2.56)	AR	
8-21	12892-73G01-258	SHIM, TAPPET (T:2.58)	AR	
8-22	12892-73G01-260	SHIM, TAPPET (T:2.60)	AR	
8-23	12892-73G01-262	SHIM, TAPPET (T:2.62)	AR	
8-24	12892-73G01-264	SHIM, TAPPET (T:2.64)	AR	
8-25	12892-73G01-266	SHIM, TAPPET (T:2.66)	AR	
8-26	12892-73G01-268	SHIM, TAPPET (T:2.68)	AR	

FIG.121A

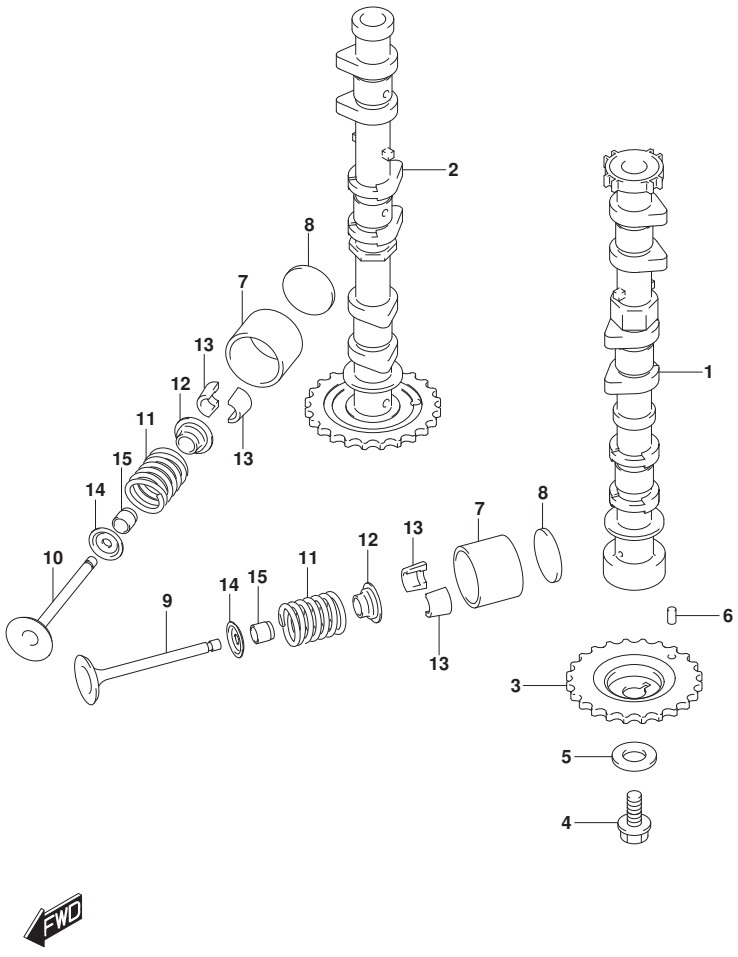

FIG.121A (1-B-14) CAMSHAFT

REF NO.	PART NO.	DESCRIPTION	Q'TY	REMARKS
8-27	12892-73G01-270	SHIM, TAPPET (T:2.70)	AR	
8-28	12892-73G01-272	SHIM, TAPPET (T:2.72)	AR	
8-29	12892-73G01-274	SHIM, TAPPET (T:2.74)	AR	
8-30	12892-73G01-276	SHIM, TAPPET (T:2.76)	AR	
8-31	12892-73G01-278	SHIM, TAPPET (T:2.78)	AR	
8-32	12892-73G01-280	SHIM, TAPPET (T:2.80)	AR	
8-33	12892-73G01-282	SHIM, TAPPET (T:2.82)	AR	OPT
8-34	12892-73G01-284	SHIM, TAPPET (T:2.84)	AR	OPT
8-35	12892-73G01-286	SHIM, TAPPET (T:2.86)	AR	OPT
8-36	12892-73G01-288	SHIM, TAPPET (T:2.88)	AR	OPT
8-37	12892-73G01-290	SHIM, TAPPET (T:2.90)	AR	OPT
8-38	12892-73G01-292	SHIM, TAPPET (T:2.92)	AR	OPT
8-39	12892-73G01-294	SHIM, TAPPET (T:2.94)	AR	OPT
8-40	12892-73G01-296	SHIM, TAPPET (T:2.96)	AR	OPT
8-41	12892-73G01-298	SHIM, TAPPET (T:2.98)	AR	OPT
8-42	12892-73G01-300	SHIM, TAPPET (T:3.00)	AR	OPT
9	12911-88L00	VALVE, INTAKE	6	
10	12915-73G20	VALVE, EXHAUST	6	
11	12921-87J11	SPRING, VALVE	12	
12	12931-78G00	RETAINER, VALVE SPRING	12	
13	12932-24400	COTTER, VALVE	24	
14	12933-51E00	SEAT, VALVE SPRING	12	
15	09289-05012	OIL SEAL (5.5X11.5X9.3)	12	

DF60A_E01_018_121A
CAMSHAFT

FIG.124A

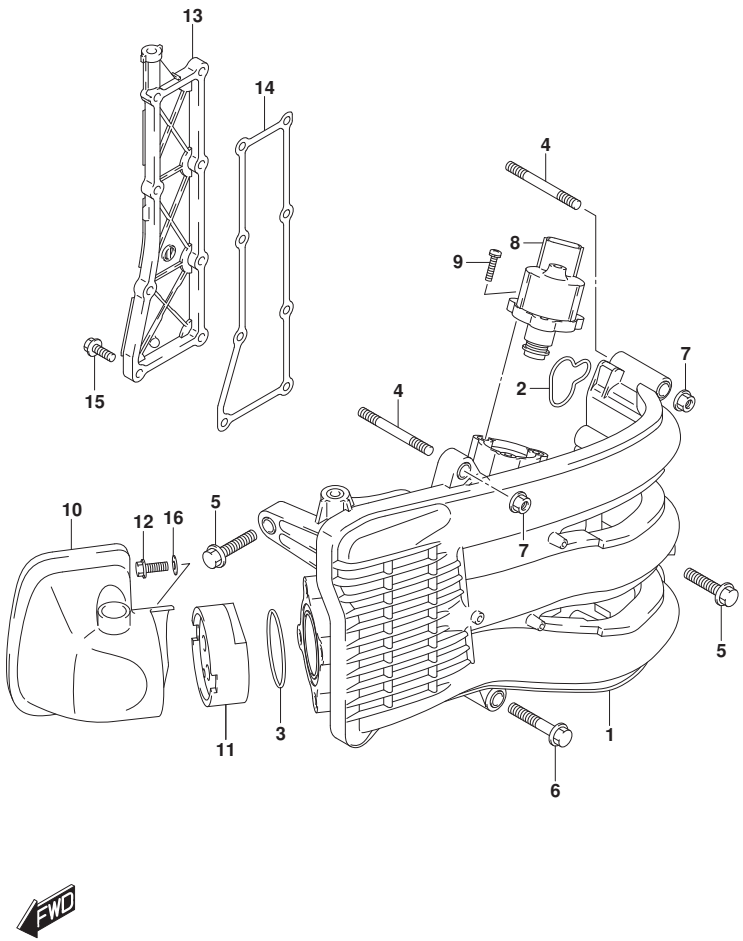

FIG.124A (1-B-15) INTAKE MANIFOLD/SILENCER/EXHAUST COVER (DF40A)(DF40AQH)

REF NO.	PART NO.	DESCRIPTION	Q'TY	REMARKS
1	13110-88L00	MANIFOLD, INTAKE	1	
2	13119-88L00	.GASKET, INTAKE MANIFOLD	3	
3	13125-88L00	.GASKET, THROTTLE BODY	1	
4	01421-08607	STUD BOLT	2	
5	01550-0830C	BOLT	6	
6	01550-08407	BOLT	1	
7	08316-10087	NUT	2	
8	18137-88L01	VALVE, IAC	1	
9	02112-34167	SCREW	3	
10	13810-88L00	SILENCER	1	
11	13820-88L00	HOLDER, SILENCER	1	
12	01547-0616C	BOLT	1	
13	14141-88L00	COVER, EXHAUST	1	
14	14151-88L00	GASKET, EXHAUST COVER	1	
15	01550-0620C	BOLT	8	
16	09160-06094	WASHER (6.5X15X1.0)	1	

DF40A E01
DF40AQH E01
DF40ATH E01

DF60A_E01_018_124A
INTAKE MANIFOLD/SILENCER/EXHAUST COVER

FIG.124B

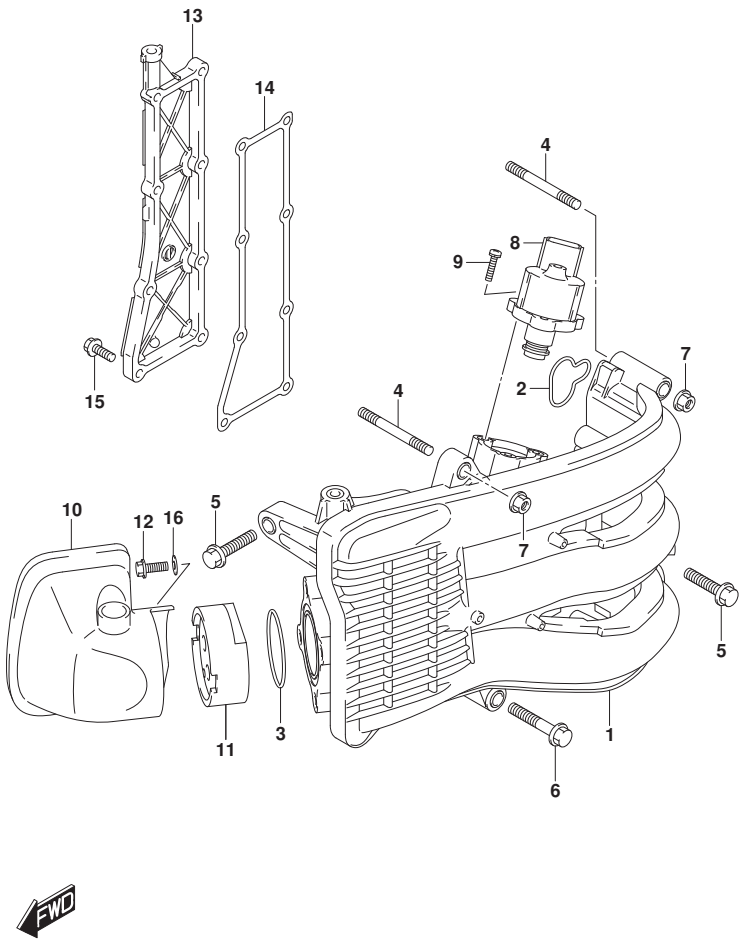

FIG.124B (1-C-2) INTAKE MANIFOLD/SILENCER/EXHAUST COVER (DF40AST)(DF60A)(D

REF NO.	PART NO.	DESCRIPTION	Q'TY	REMARKS
1	13110-88L00	MANIFOLD, INTAKE	1	
2	13119-88L00	.GASKET, INTAKE MANIFOLD	3	
3	13125-88L00	.GASKET, THROTTLE BODY	1	
4	01421-08607	STUD BOLT	2	
5	01550-0830C	BOLT	6	
6	01550-08407	BOLT	1	
7	08316-10087	NUT	2	
8	18137-88L01	VALVE, IAC	1	
9	02112-34167	SCREW	3	
10	13810-88L00	SILENCER	1	
11	13813-88L00	HOLDER, SILENCER	1	
12	01547-0616C	BOLT	1	
13	14141-88L00	COVER, EXHAUST	1	
14	14151-88L00	GASKET, EXHAUST COVER	1	
15	01550-0620C	BOLT	8	
16	09160-06094	WASHER (6.5X15X1.0)	1	

DF40AST E34
DF60A E01
DF60A E40
DF60AQH E01
DF60AQH E40

DF60A_E01_018_124B
INTAKE MANIFOLD/SILENCER/EXHAUST COVER

FIG.124C

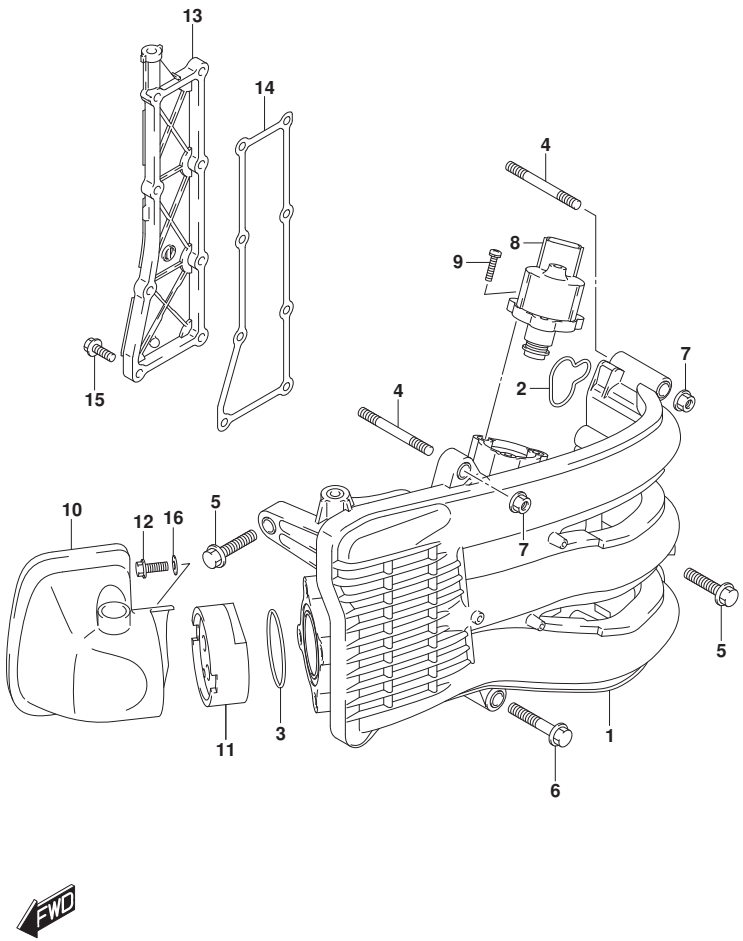

FIG.124C (1-C-3) INTAKE MANIFOLD/SILENCER/EXHAUST COVER (DF50A)(DF50ATH)

REF NO.	PART NO.	DESCRIPTION	Q'TY	REMARKS
1	13110-88L00	MANIFOLD, INTAKE	1	
2	13119-88L00	.GASKET, INTAKE MANIFOLD	3	
3	13125-88L00	.GASKET, THROTTLE BODY	1	
4	01421-08607	STUD BOLT	2	
5	01550-0830C	BOLT	6	
6	01550-08407	BOLT	1	
7	08316-10087	NUT	2	
8	18137-88L01	VALVE, IAC	1	
9	02112-34167	SCREW	3	
10	13810-88L00	SILENCER	1	
11	13820-88L10	HOLDER, SILENCER	1	
12	01547-0616C	BOLT	1	
13	14141-88L00	COVER, EXHAUST	1	
14	14151-88L00	GASKET, EXHAUST COVER	1	
15	01550-0620C	BOLT	8	
16	09160-06094	WASHER (6.5X15X1.0)	1	

DF50A E01
DF50ATH E01

DF60A_E01_018_124C
INTAKE MANIFOLD/SILENCER/EXHAUST COVER

FIG.124D

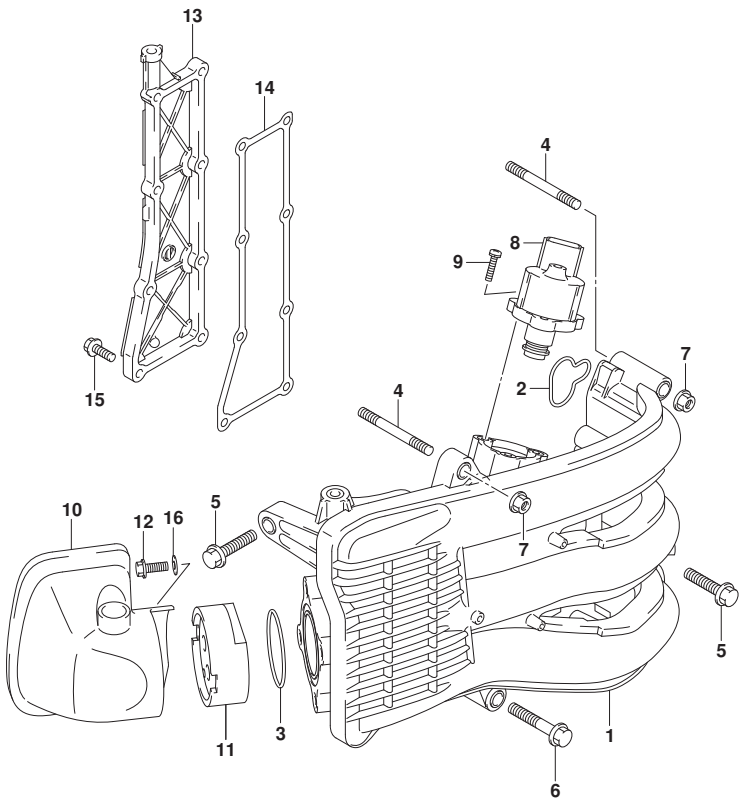

FIG.124D (1-C-4) INTAKE MANIFOLD/SILENCER/EXHAUST COVER (DF50AVT)(DF50AVT

REF NO.	PART NO.	DESCRIPTION	Q'TY	REMARKS
1	13110-88L00	MANIFOLD, INTAKE	1	
2	13119-88L00	.GASKET, INTAKE MANIFOLD	3	
3	13125-88L00	.GASKET, THROTTLE BODY	1	
4	01421-08607	STUD BOLT	2	
5	01550-0830C	BOLT	6	
6	01550-08407	BOLT	1	
7	08316-10087	NUT	2	
8	18137-88L01	VALVE, IAC	1	
9	02112-34167	SCREW	3	
10	13810-88L00	SILENCER	1	
11	13820-88L10	HOLDER, SILENCER	1	
12	01547-0616C	BOLT	1	
13	14141-88L00	COVER, EXHAUST	1	
14	14151-88L00	GASKET, EXHAUST COVER	1	
15	01550-0620C	BOLT	8	
16	09160-06094	WASHER (6.5X15X1.0)	1	

DF50AVT E01
DF50AVTH E01

DF60A_E01_018_124D
INTAKE MANIFOLD/SILENCER/EXHAUST COVER

FIG.124E

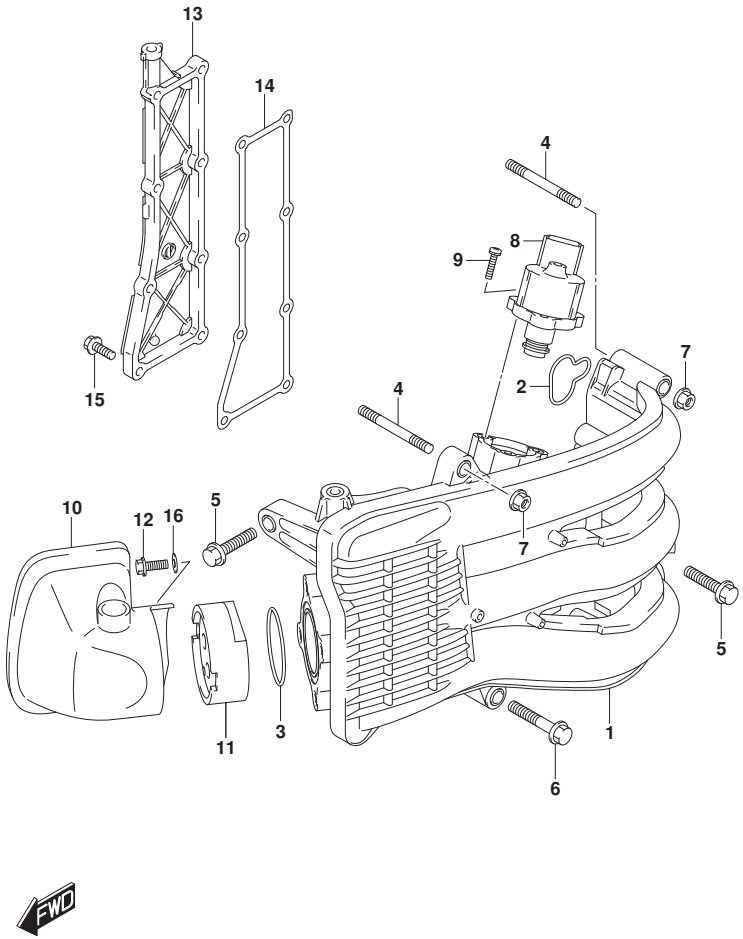

FIG.124E (1-C-5) INTAKE MANIFOLD/SILENCER/EXHAUST COVER (DF60ATH)(DF60AVT

REF NO.	PART NO.	DESCRIPTION	Q'TY	REMARKS
1	13110-88L00	MANIFOLD, INTAKE	1	
2	13119-88L00	.GASKET, INTAKE MANIFOLD	3	
3	13125-88L00	.GASKET, THROTTLE BODY	1	
4	01421-08607	STUD BOLT	2	
5	01550-0830C	BOLT	6	
6	01550-08407	BOLT	1	
7	08316-10087	NUT	2	
8	18137-88L01	VALVE, IAC	1	
9	02112-34167	SCREW	3	
10	13810-88L00	SILENCER	1	
11	13813-88L00	HOLDER, SILENCER	1	
12	01547-0616C	BOLT	1	
13	14141-88L00	COVER, EXHAUST	1	
14	14151-88L00	GASKET, EXHAUST COVER	1	
15	01550-0620C	BOLT	8	
16	09160-06094	WASHER (6.5X15X1.0)	1	

DF60ATH E01
DF60ATH E40
DF60AVT E01
DF60AVT E40
DF60AVTH E01
DF60AVTH E40

DF60A_E01_018_124E
INTAKE MANIFOLD/SILENCER/EXHAUST COVER

FIG.136A

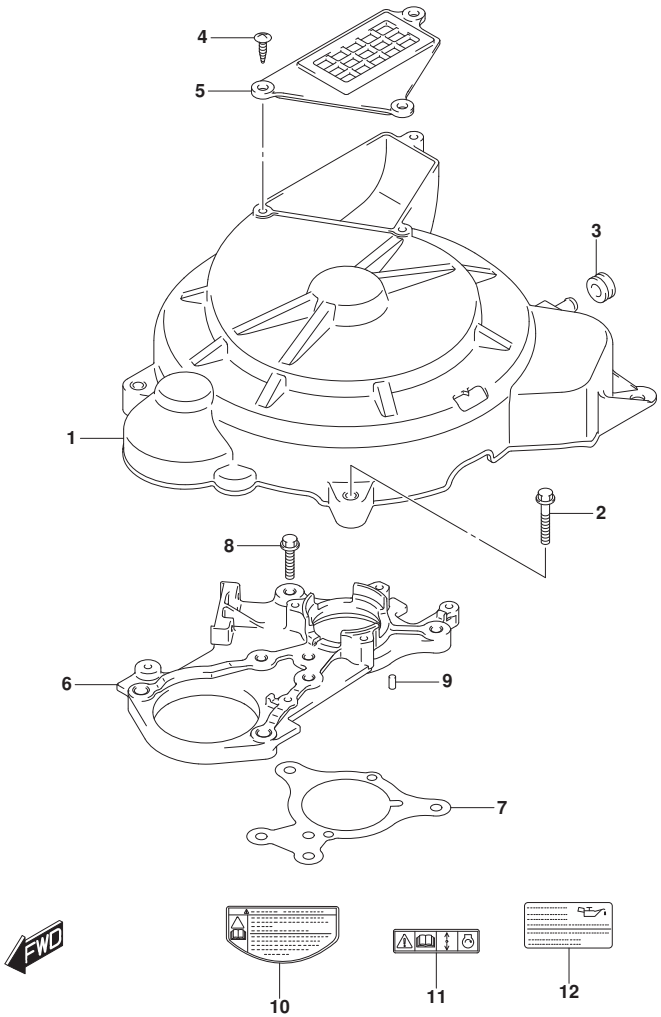

FIG.136A (1-C-6) RING GEAR COVER

REF NO.	PART NO.	DESCRIPTION	Q'TY	REMARKS
1	11510-88L00	COVER, RING GEAR	1	
2	01550-0630C	BOLT	3	
3	09320-09501	CUSHION	1	
4	03542-06209	SCREW	3	
5	11514-88L00	PLATE, RING GEAR COVER	1	
6	11411-88L00	HOUSING, UPPER OIL SEAL	1	
7	11413-88L00	GASKET, UPPER OIL SEAL	1	
8	01550-0625C	BOLT	5	
9	04221-04089	PIN	2	
10	61472-88L00	LABEL, MAG COVER	1	
11	69711-93E10	LABEL (S.I.G.P.)	1	
12	61494-88L01	LABEL, OIL & CLEARANCE	1	

DF60A_E01_018_136A
RING GEAR COVER

FIG.143A

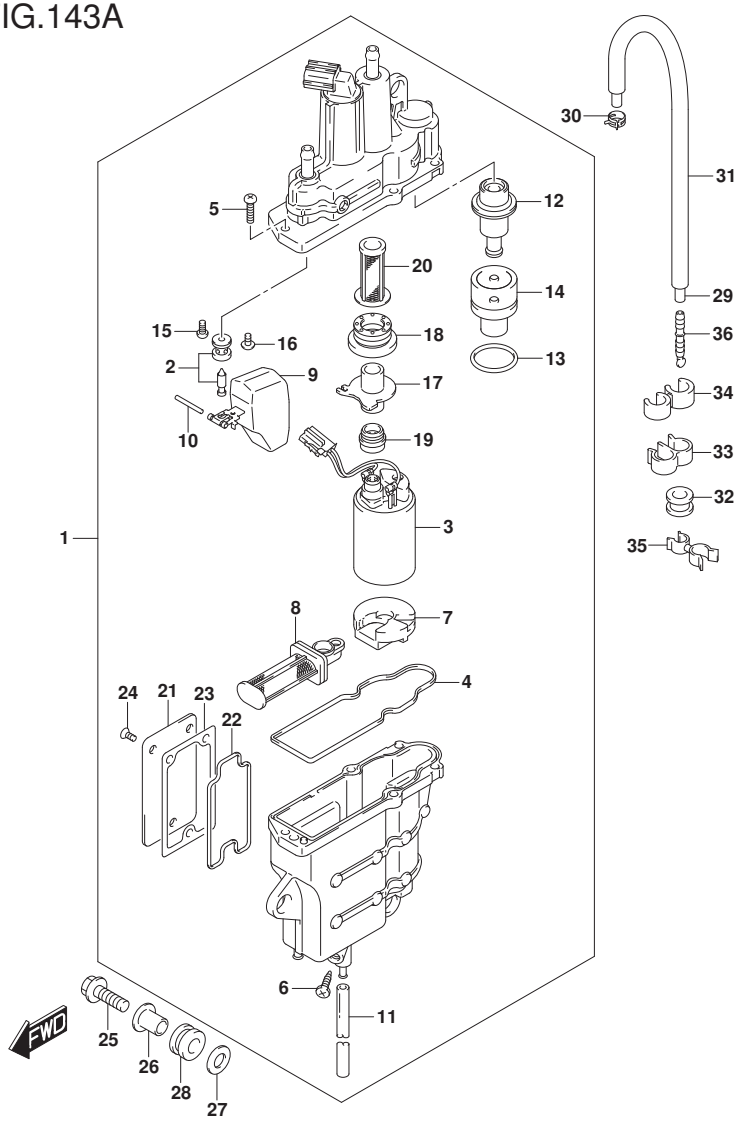

FIG.143A (1-C-7) FUEL VAPOR SEPARATOR (E01)(E34)

REF NO.	PART NO.	DESCRIPTION	Q'TY	REMARKS
1	15600-88L03	SEPARATOR ASSY, FUEL VAPOR	1	
2	13370-88L00	.VALVE ASSY, NEEDLE	1	
3	15200-88L00	.PUMP ASSY, FUEL	1	
4	15626-88L00	.SEAL	1	
5	15628-99E00	.SCREW (L:15)	5	
6	15629-99E10	.SCREW, DRAIN	1	
7	15641-88L00	.SPACER	1	
8	15642-88L00	.FILTER ASSY	1	
9	15650-99E00	.FLOAT	1	
10	15654-88L00	.PIN	1	
11	15683-87J00	.HOSE, DRAIN (L:120)	1	
12	15760-88L00	.REGULATOR ASSY	1	
13	15644-88L00	.O RING	1	
14	15645-88L00	.HOLDER, REGULATOR	1	
15	02112-0408A	.SCREW	1	
16	02142-0408B	.SCREW	1	
17	15643-88L00	.JOINT	1	
18	15641-88L31	.BUSH	1	

DF60A_E01_018_143A
FUEL VAPOR SEPARATOR

FIG.143A

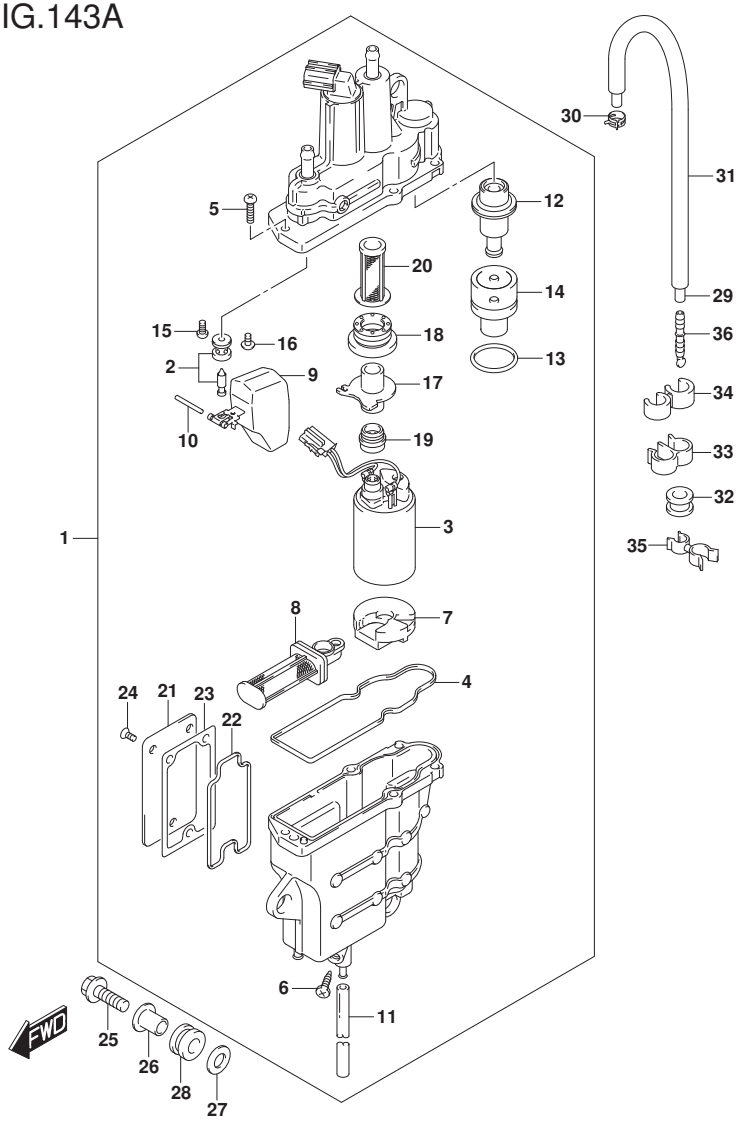

FIG.143A (1-C-8) FUEL VAPOR SEPARATOR (E01)(E34)

REF NO.	PART NO.	DESCRIPTION	Q'TY	REMARKS
19	15641-88L51	.BUSH	1	
20	15642-88L10	.FILTER	1	
21	15612-88L00	.COVER	1	
22	15613-88L00	.O RING	1	
23	15613-92J00	.GASKET	1	
24	15614-88L00	.SCREW	3	
25	01550-0630C	BOLT	3	
26	09169-06075	WASHER	3	
27	09160-06084	WASHER (6.5X18X1.6)	3	
28	09320-09039	CUSHION	3	
29	09352-50003-770	HOSE (5X8.2X770)	1	
30	09401-08412	CLIP	1	
31	18498-88L10	PROTECTOR, EVAP HOSE (L:730)	1	
32	09320-08076	GROMMET	1	
33	09408-00043	CLAMP	1	
34	09408-00121	CLAMP	1	
35	09408-00145	CLIP	1	
36	55127-87D00	PLUG, EVAPORATION HOSE	1	

DF40A E01
DF40AQH E01
DF40ATH E01
DF40AST E34
DF50A E01
DF50ATH E01
DF60A E01
DF60AQH E01
DF60ATH E01
DF50AVT E01
DF50AVTH E01
DF60AVT E01
DF60AVTH E01

DF60A_E01_018_143A
FUEL VAPOR SEPARATOR

FIG.143B

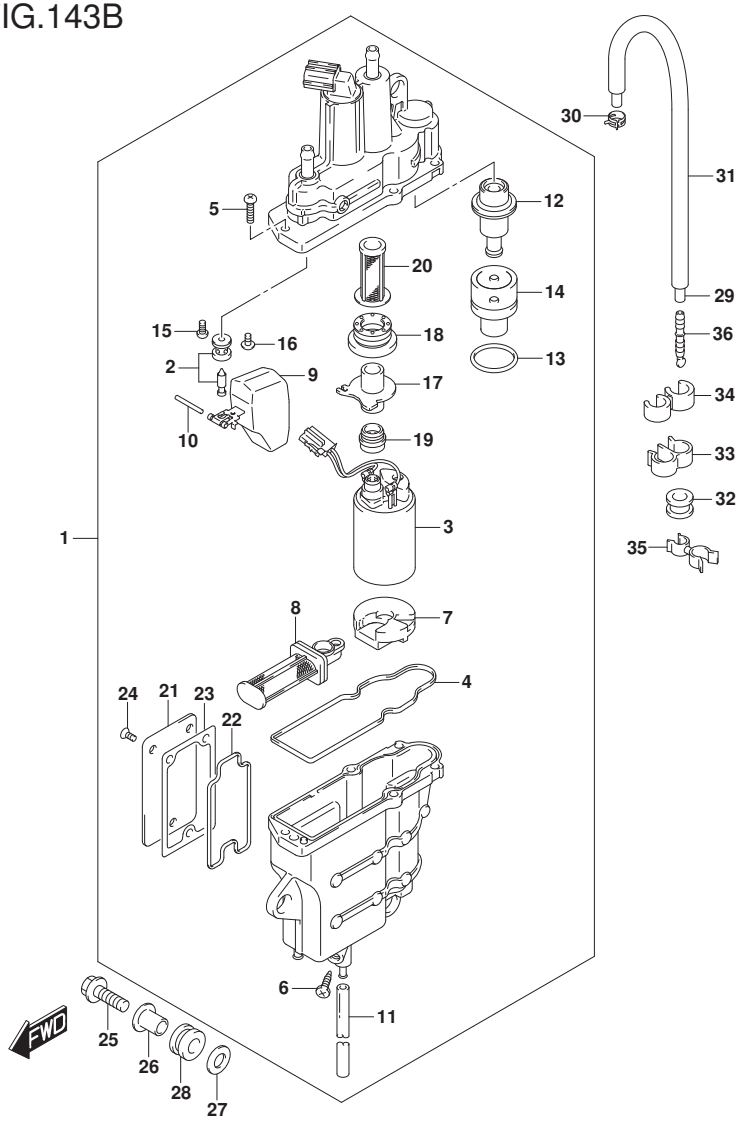

FIG.143B (1-C-9) FUEL VAPOR SEPARATOR (E40)

REF NO.	PART NO.	DESCRIPTION	Q'TY	REMARKS
1	15600-88L13	SEPARATOR ASSY, FUEL VAPOR	1	
2	13370-88L10	.VALVE ASSY, NEEDLE	1	
3	15200-88L10	.PUMP ASSY, FUEL	1	
4	15626-88L10	.SEAL	1	
5	15628-99E00	.SCREW (L:15)	5	
6	15629-99E10	.SCREW, DRAIN	1	
7	15641-88L10	.SPACER	1	
8	15642-88L00	.FILTER ASSY	1	
9	15650-99E00	.FLOAT	1	
10	15654-88L00	.PIN	1	
11	15683-87J00	.HOSE, DRAIN (L:120)	1	
12	15760-88L00	.REGULATOR ASSY	1	
13	15644-88L10	.O RING	1	
14	15645-88L00	.HOLDER, REGULATOR	1	
15	13614-89J00	.SCREW	1	
16	13614-93J00	.SCREW	1	
17	15643-88L00	.JOINT	1	
18	15641-88L31	.BUSH	1	
19	15641-88L51	.BUSH	1	
20	15642-88L10	.FILTER	1	
21	15612-88L00	.COVER	1	
22	15613-88L00	.O RING	1	
23	15613-92J00	.GASKET	1	
24	15614-88L00	.SCREW	3	
25	01550-0630C	BOLT	3	
26	09169-06075	WASHER	3	

DF60A_E01_018_143B
FUEL VAPOR SEPARATOR

FIG.143B

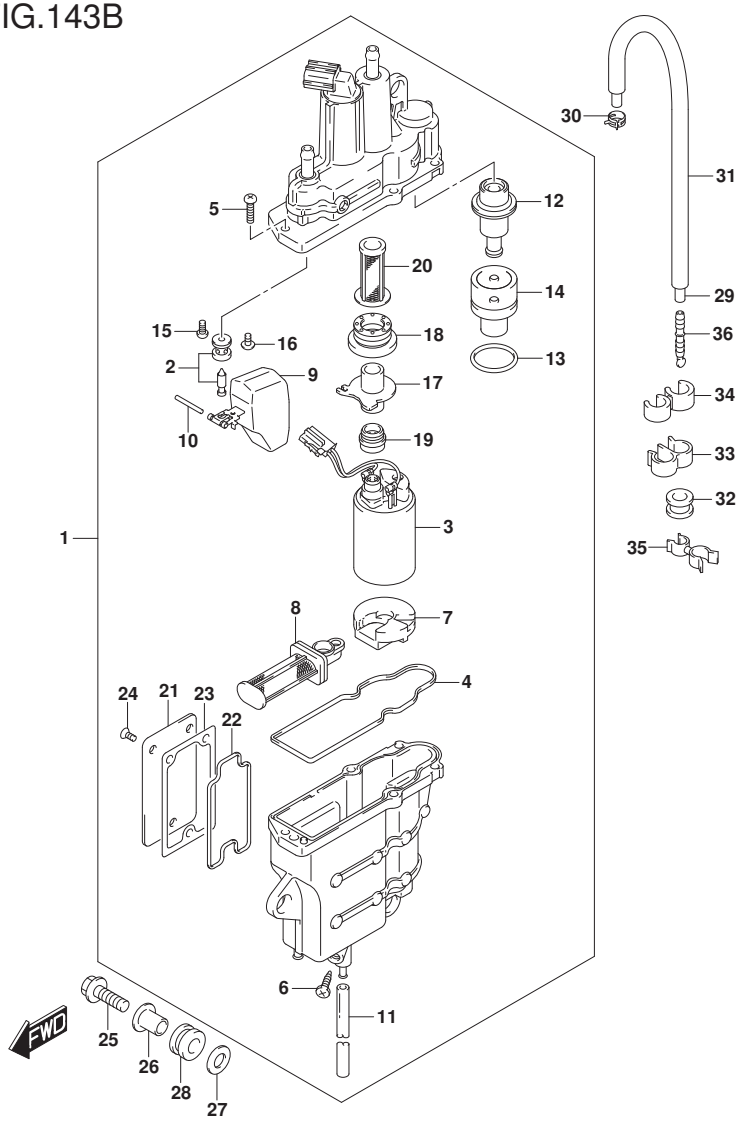

FIG.143B (1-C-10) FUEL VAPOR SEPARATOR (E40)

REF NO.	PART NO.	DESCRIPTION	Q'TY	REMARKS
27	09160-06084	WASHER (6.5X18X1.6)	3	
28	09320-09039	CUSHION	3	
29	09352-50003-770	HOSE (5X8.2X770)	1	
30	09401-08412	CLIP	1	
31	18498-88L10	PROTECTOR, EVAP HOSE (L:730)	1	
32	09320-08076	GROMMET	1	
33	09408-00043	CLAMP	1	
34	09408-00121	CLAMP	1	
35	09408-00145	CLIP	1	
36	55127-87D00	PLUG, EVAPORATION HOSE	1	

DF60A E40
DF60AQH E40
DF60ATH E40
DF60AVT E40
DF60AVTH E40

DF60A_E01_018_143B
FUEL VAPOR SEPARATOR

FIG.144A

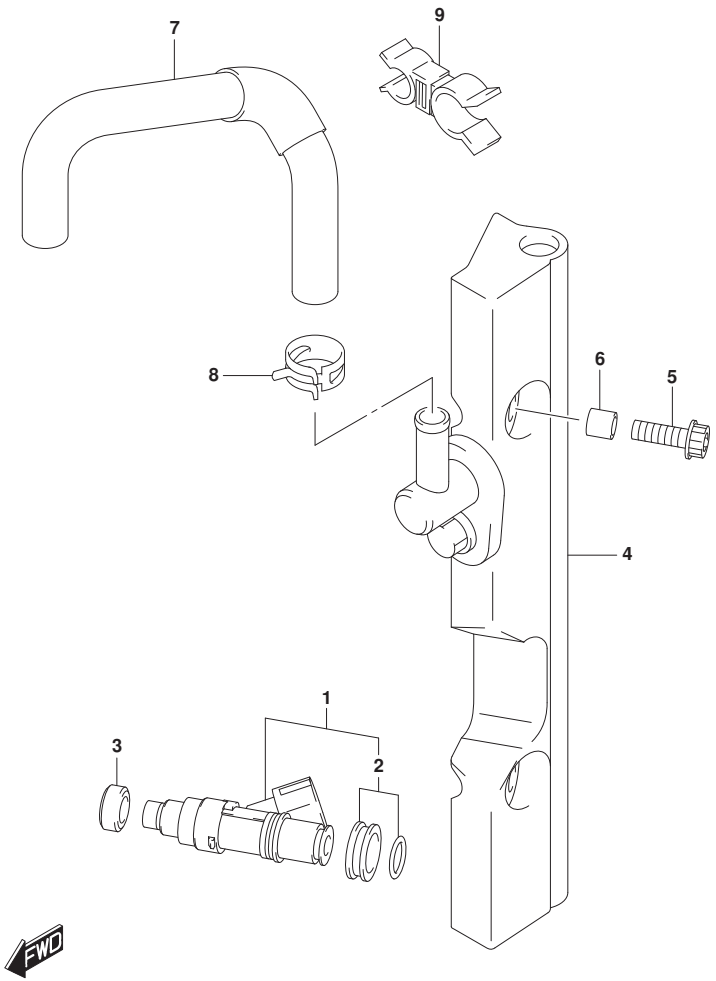

FIG.144A (1-C-11) FUEL INJECTOR (E01)(E34)

REF NO.	PART NO.	DESCRIPTION	Q'TY	REMARKS
1	15710-85K00	INJECTOR ASSY, FUEL	3	
2	15716-65DT0	.GROMMET SET	3	
3	09320-08062	CUSHION	3	
4	15750-88L10	PIPE, DELIVERY	1	
5	07120-06357	BOLT	2	
6	09180-06198	SPACER (6.2X12X16)	2	
7	15681-88L10	HOSE (SEPARATOR TO DLVY)	1	
8	09401-11425	CLIP	2	
9	09408-00174	CLAMP	1	

DF40A E01
DF40AQH E01
DF40ATH E01
DF40AST E34
DF50A E01
DF50ATH E01
DF60A E01
DF60AQH E01
DF60ATH E01
DF50AVT E01
DF50AVTH E01
DF60AVT E01
DF60AVTH E01

DF60A_E01_018_144A
FUEL INJECTOR

FIG.144B

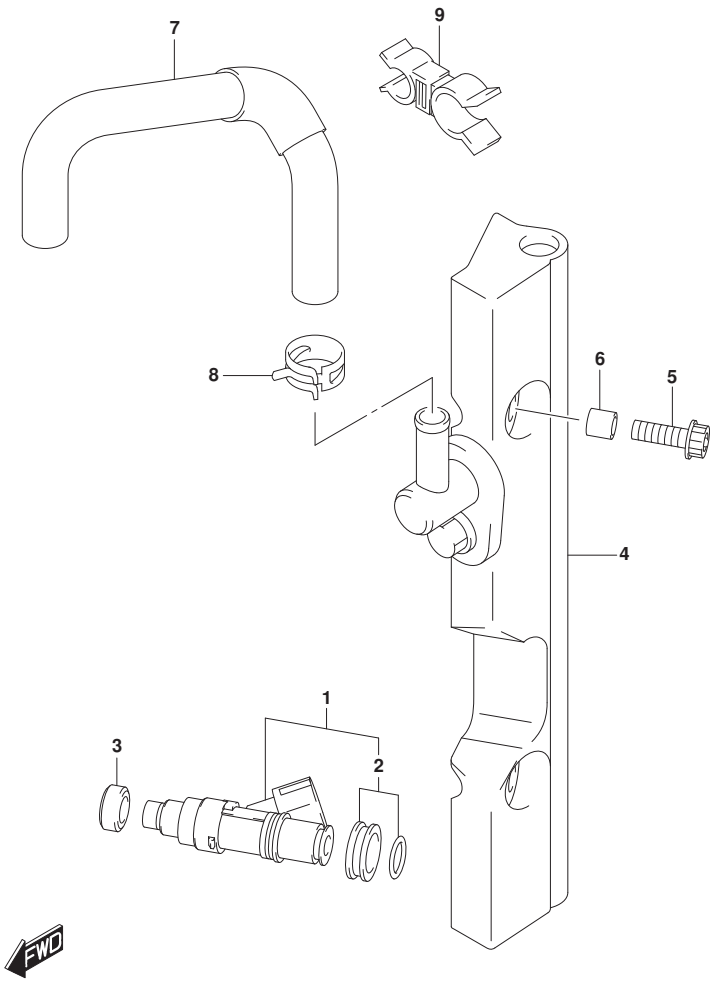

FIG.144B (1-C-12) FUEL INJECTOR (E40)

REF NO.	PART NO.	DESCRIPTION	Q'TY	REMARKS
1	15710-85K00	INJECTOR ASSY, FUEL	3	
2	15716-65DT0	.GROMMET SET	3	
3	09320-08062	CUSHION	3	
4	15750-88L20	PIPE, DELIVERY	1	
5	07120-06357	BOLT	2	
6	09180-06198	SPACER (6.2X12X16)	2	
7	15681-88L10	HOSE (SEPARATOR TO DLVY)	1	
8	09401-11425	CLIP	2	
9	09408-00174	CLAMP	1	

DF60A E40
DF60AQH E40
DF60ATH E40
DF60AVT E40
DF60AVTH E40

DF60A_E01_018_144B
FUEL INJECTOR

FIG.146A

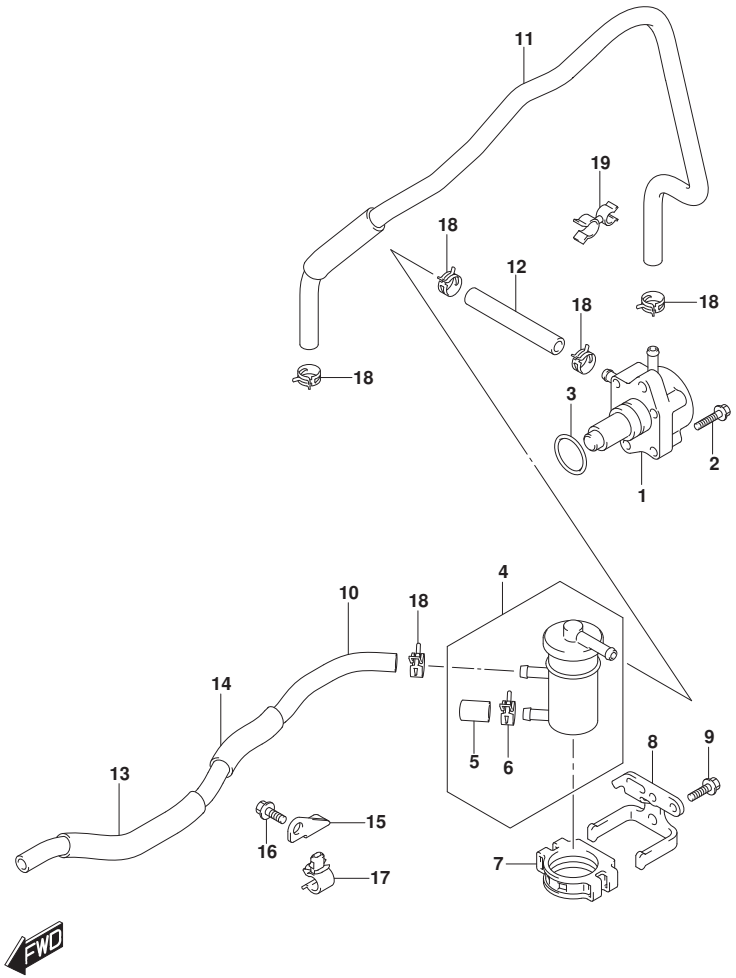

FIG.146A (1-C-13) FUEL PUMP

REF NO.	PART NO.	DESCRIPTION	Q'TY	REMARKS
1	15100-90J11	PUMP ASSY, FUEL	1	
2	01550-0625C	BOLT	2	
3	09280-26005	O RING (D:2.4,ID:26.2)	1	
4	15410-88L00	FILTER, FUEL	1	
5	15419-87J00	.CAP, FUEL FILTER	1	
6	09401-11423	.CLIP	1	
7	15422-96J00	CLAMP, FILTER	1	
8	15421-88L00	BRACKET, FUEL FILTER	1	
9	01550-0616C	BOLT	2	
10	15191-88L20	HOSE, FUEL (JOINT TO FILTER))	1	
11	15192-88L20	HOSE, FUEL (PUMP TO SEPARATOR)	1	
12	09343-70503-080	HOSE (7X12X80)	1	
13	18498-99E10	PROTECTOR, FUEL HOSE NO.1	1	L:610->230
14	18498-96J20	PROTECTOR, FUEL HOSE NO.2	1	L:370->95
15	15197-88L00	BRACKET, FUEL HOSE CLAMP	1	
16	01550-0612C	BOLT	1	
17	09403-11320	CLAMP	3	
18	09401-11423	CLIP	5	
19	09408-00145	CLIP	1	

DF60A_E01_018_146A
FUEL PUMP

FIG.160A

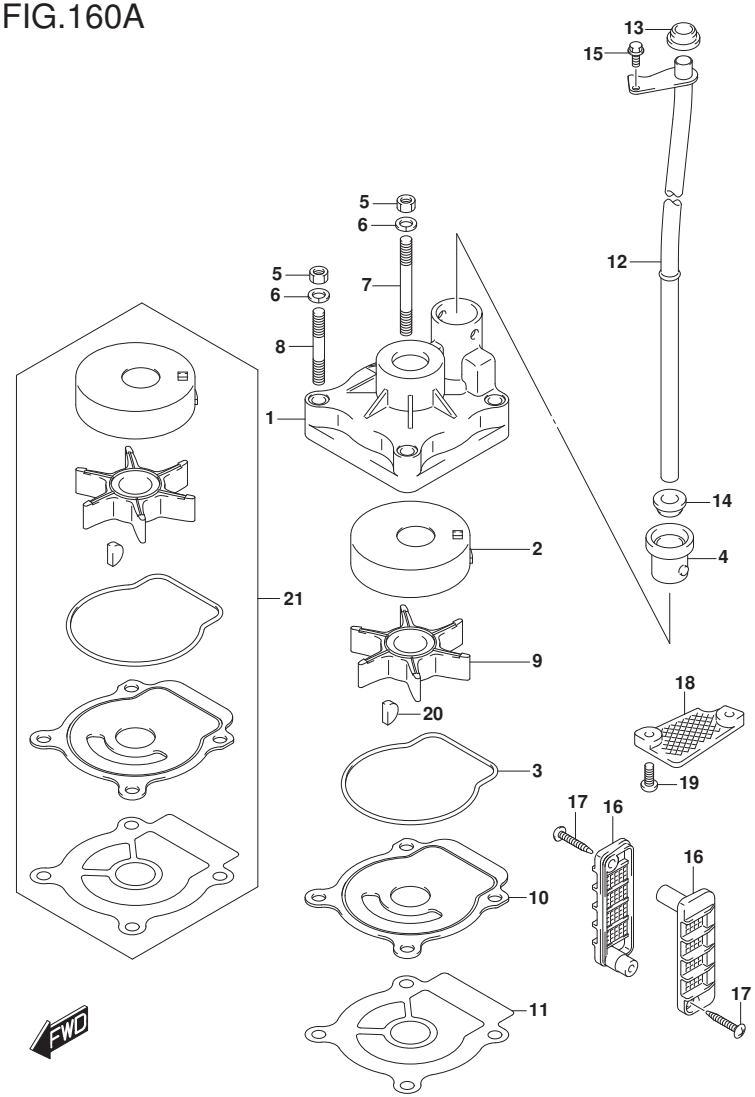

FIG.160A (1-C-14) WATER PUMP (DF40A E01)(DF40AST E34)(DF50A E01)

REF NO.	PART NO.	DESCRIPTION	Q'TY	REMARKS
1	17410-88L00	CASE, WATER PUMP	1	
2	17413-95J00	SLEEVE, WATER PUMP CASE	1	
3	17416-95J00	SEALING, WATER PUMP CASE	1	
4	17564-88L00	BUSH, WATER PUMP CASE	1	
5	29141-93J00	NUT	4	
6	29162-93J00	WASHER, LOCK	4	
7	09108-06143	STUD BOLT	2	
8	09108-06144	STUD BOLT	2	
9	17461-96312	IMPELLER, WATER PUMP	1	
10	17471-95J01	PANEL, PUMP CASE UNDER	1	
11	17472-96303	GASKET, PUMP CASE UNDER	1	
12-1	17560-88L00	TUBE, WATER (S)	1	W/TRANSOM(S)
12-2	17560-88L10	TUBE, WATER (L)	1	W/TRANSOM(L)
13	17562-87L00	GROMMET, WATER TUBE UPPER	1	
14	17562-87L00	GROMMET, WATER TUBE LOWER	1	W/TRANSOM(L)
15	09116-06236	BOLT (6X16)	1	
16	17631-96320	FILTER, WATER	2	
17	03142-04309	SCREW	2	
18-1	17635-87E00	FILTER, SUB WATER	1	
18-2	17635-87E10	PLATE, GEAR CASE	1	OPT
19	09125-05046	SCREW (5X12)	2	
20	09420-04006	KEY	1	
21	17400-88L00	WATER PUMP REPAIR KIT	1	OPT

DF40A E01
DF40AST E34
DF50A E01

DF60A_E01_018_160A
WATER PUMP

FIG.160B

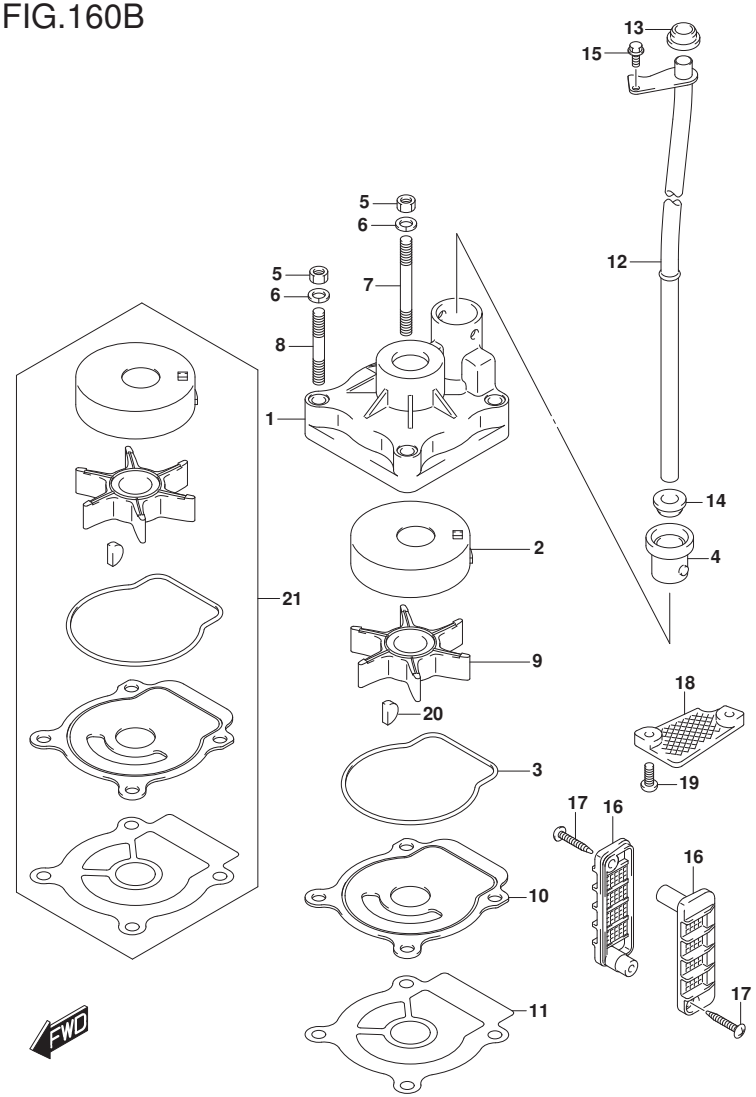

FIG.160B (1-C-15) WATER PUMP (DF40AQH E01)(DF40ATH E01)(DF50ATH E01)

REF NO.	PART NO.	DESCRIPTION	Q'TY	REMARKS
1	17410-88L00	CASE, WATER PUMP	1	
2	17413-95J00	SLEEVE, WATER PUMP CASE	1	
3	17416-95J00	SEALING, WATER PUMP CASE	1	
4	17564-88L00	BUSH, WATER PUMP CASE	1	
5	29141-93J00	NUT	4	
6	29162-93J00	WASHER, LOCK	4	
7	09108-06143	STUD BOLT	2	
8	09108-06144	STUD BOLT	2	
9	17461-96312	IMPELLER, WATER PUMP	1	
10	17471-95J01	PANEL, PUMP CASE UNDER	1	
11	17472-96303	GASKET, PUMP CASE UNDER	1	
12	17560-88L10	TUBE, WATER (L)	1	
13	17562-87L00	GROMMET, WATER TUBE UPPER	1	
14	17562-87L00	GROMMET, WATER TUBE LOWER	1	
15	09116-06236	BOLT (6X16)	1	
16	17631-96320	FILTER, WATER	2	
17	03142-04309	SCREW	2	
18-1	17635-87E00	FILTER, SUB WATER	1	
18-2	17635-87E10	PLATE, GEAR CASE	1	OPT
19	09125-05046	SCREW (5X12)	2	
20	09420-04006	KEY	1	
21	17400-88L00	WATER PUMP REPAIR KIT	1	OPT

DF40AQH E01
DF40ATH E01
DF50ATH E01

DF60A_E01_018_160B
WATER PUMP

FIG.160C

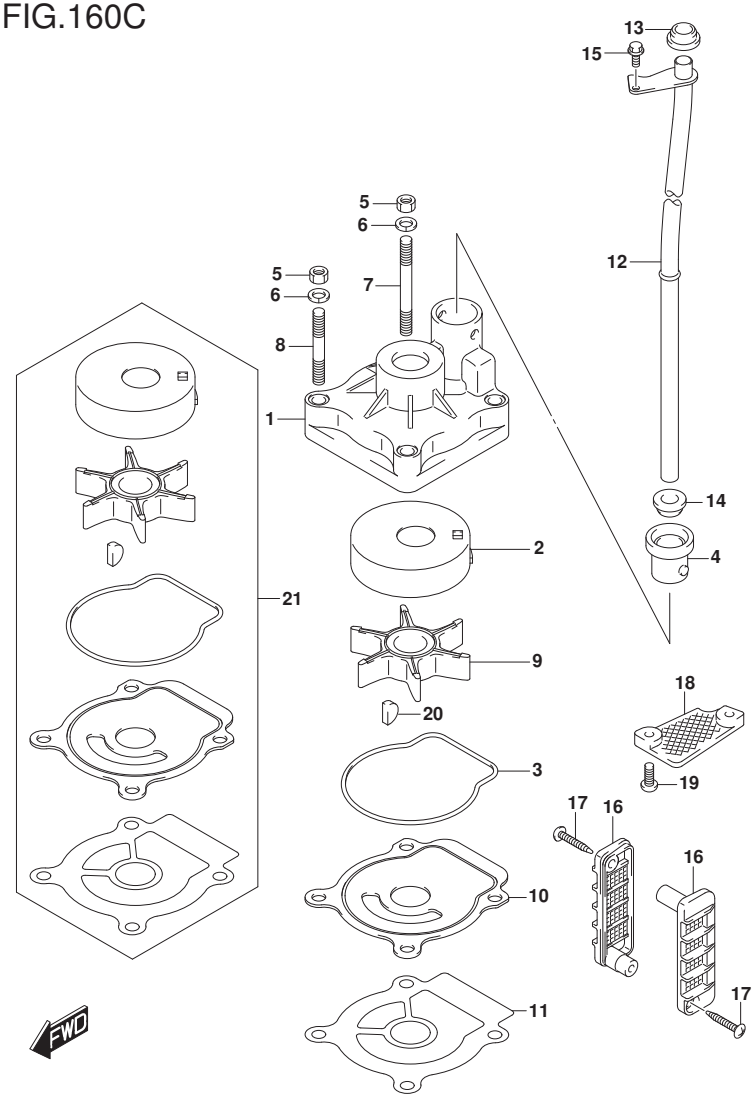

FIG.160C (1-D-2) WATER PUMP (DF60A E01)

REF NO.	PART NO.	DESCRIPTION	Q'TY	REMARKS
1	17410-88L00	CASE, WATER PUMP	1	
2	17413-95J00	SLEEVE, WATER PUMP CASE	1	
3	17416-95J00	SEALING, WATER PUMP CASE	1	
4	17564-88L00	BUSH, WATER PUMP CASE	1	
5	29141-93J00	NUT	4	
6	29162-93J00	WASHER, LOCK	4	
7	09108-06143	STUD BOLT	2	
8	09108-06144	STUD BOLT	2	
9	17461-96312	IMPELLER, WATER PUMP	1	
10	17471-95J01	PANEL, PUMP CASE UNDER	1	
11	17472-96303	GASKET, PUMP CASE UNDER	1	
12-1	17560-88L00	TUBE, WATER (S)	1	W/TRANSOM(S)
12-2	17560-88L10	TUBE, WATER (L)	1	W/TRANSOM(L)
12-3	17560-88L20	TUBE, WATER (X)	1	W/TRANSOM(X)
13	17562-87L00	GROMMET, WATER TUBE UPPER	1	
14	17562-87L00	GROMMET, WATER TUBE LOWER	1	W/TRANSOM(L) W/TRANSOM(X)
15	09116-06236	BOLT (6X16)	1	
16	17631-96320	FILTER, WATER	2	
17	03142-04309	SCREW	2	
18-1	17635-87E00	FILTER, SUB WATER	1	
18-2	17635-87E10	PLATE, GEAR CASE	1	OPT
19	09125-05046	SCREW (5X12)	2	
20	09420-04006	KEY	1	
21	17400-88L00	WATER PUMP REPAIR KIT	1	OPT

DF60A E01

FIG.160D

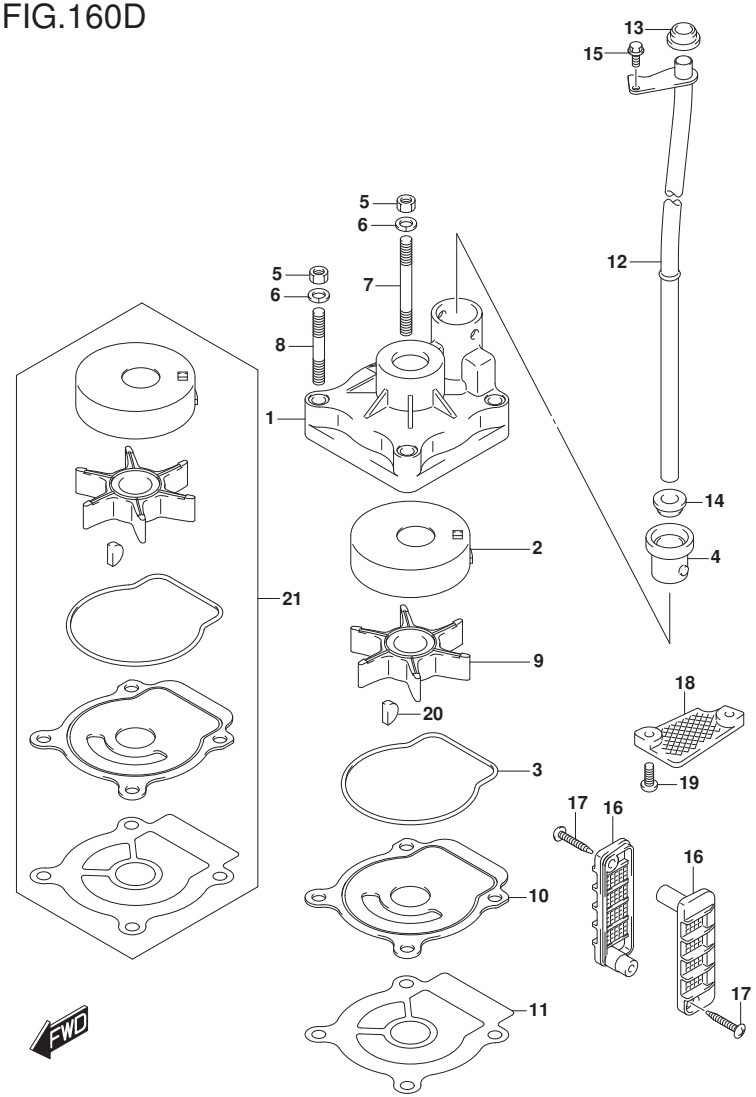

FIG.160D (1-D-3) WATER PUMP (DF60AQH E01)(DF60ATH E01)

REF NO.	PART NO.	DESCRIPTION	Q'TY	REMARKS
1	17410-88L00	CASE, WATER PUMP	1	
2	17413-95J00	SLEEVE, WATER PUMP CASE	1	
3	17416-95J00	SEALING, WATER PUMP CASE	1	
4	17564-88L00	BUSH, WATER PUMP CASE	1	
5	29141-93J00	NUT	4	
6	29162-93J00	WASHER, LOCK	4	
7	09108-06143	STUD BOLT	2	
8	09108-06144	STUD BOLT	2	
9	17461-96312	IMPELLER, WATER PUMP	1	
10	17471-95J01	PANEL, PUMP CASE UNDER	1	
11	17472-96303	GASKET, PUMP CASE UNDER	1	
12-1	17560-88L10	TUBE, WATER (L)	1	W/TRANSOM(L)
12-2	17560-88L20	TUBE, WATER (X)	1	W/TRANSOM(X)
13	17562-87L00	GROMMET, WATER TUBE UPPER	1	
14	17562-87L00	GROMMET, WATER TUBE LOWER	1	
15	09116-06236	BOLT (6X16)	1	
16	17631-96320	FILTER, WATER	2	
17	03142-04309	SCREW	2	
18-1	17635-87E00	FILTER, SUB WATER	1	
18-2	17635-87E10	PLATE, GEAR CASE	1	OPT
19	09125-05046	SCREW (5X12)	2	
20	09420-04006	KEY	1	
21	17400-88L00	WATER PUMP REPAIR KIT	1	OPT

DF60AQH E01
DF60ATH E01

DF60A_E01_018_160D
WATER PUMP

FIG.160E

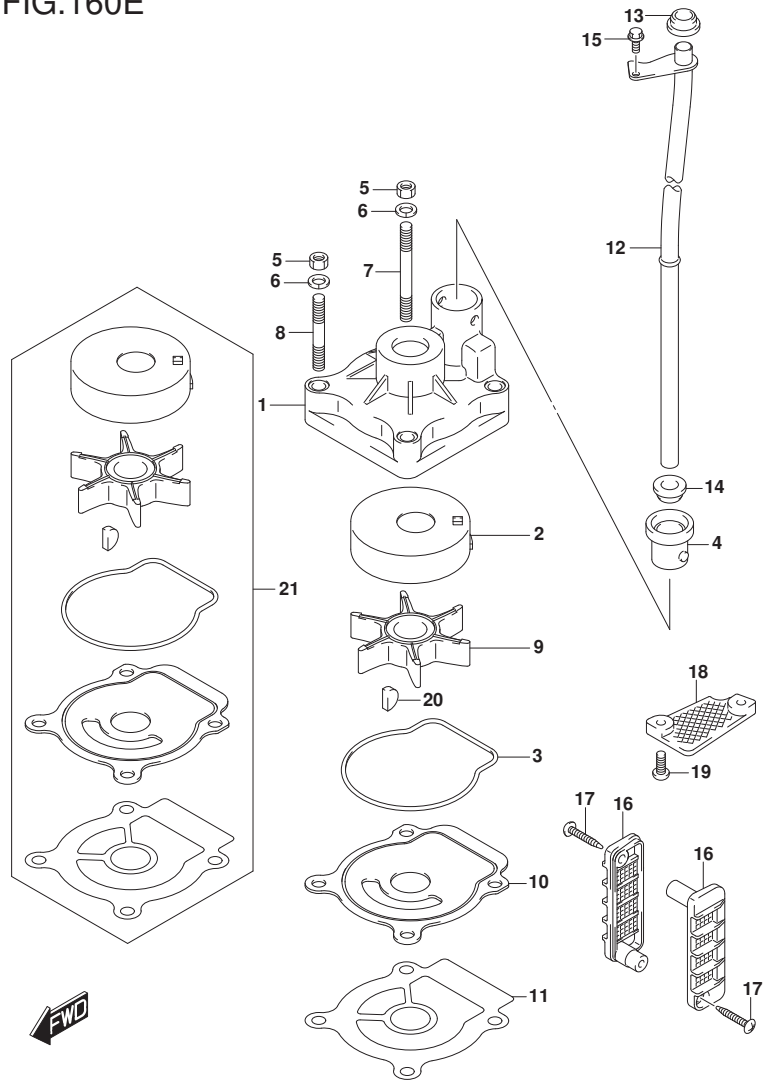

FIG.160E (1-D-4) WATER PUMP (DF60A E40)(DF60AQH E40)(DF60ATH E40)

REF NO.	PART NO.	DESCRIPTION	Q'TY	REMARKS
1	17410-88L00	CASE, WATER PUMP	1	
2	17413-95J10	SLEEVE, WATER PUMP CASE	1	
3	17416-95J00	SEALING, WATER PUMP CASE	1	
4	17564-88L00	BUSH, WATER PUMP CASE	1	
5	29141-93J00	NUT	4	
6	29162-93J00	WASHER, LOCK	4	
7	09108-06143	STUD BOLT	2	
8	09108-06144	STUD BOLT	2	
9	17461-96312	IMPELLER, WATER PUMP	1	
10	17471-95J10	PANEL, PUMP CASE UNDER	1	
11	17472-96303	GASKET, PUMP CASE UNDER	1	
12-1	17560-88L10	TUBE, WATER (L)	1	W/TRANSOM(L)
12-2	17560-88L20	TUBE, WATER (X)	1	W/TRANSOM(X)
13	17562-87L00	GROMMET, WATER TUBE UPPER	1	
14	17562-87L00	GROMMET, WATER TUBE LOWER	1	
15	09116-06236	BOLT (6X16)	1	
16	17631-96320	FILTER, WATER	2	
17	03142-04309	SCREW	2	
18-1	17635-87E00	FILTER, SUB WATER	1	
18-2	17635-87E10	PLATE, GEAR CASE	1	OPT
19	09125-05046	SCREW (5X12)	2	
20	09420-04006	KEY	1	
21	17400-88L00	WATER PUMP REPAIR KIT	1	OPT

DF60A E40
DF60AQH E40
DF60ATH E40

DF60A_E01_018_160E
WATER PUMP

FIG.160F

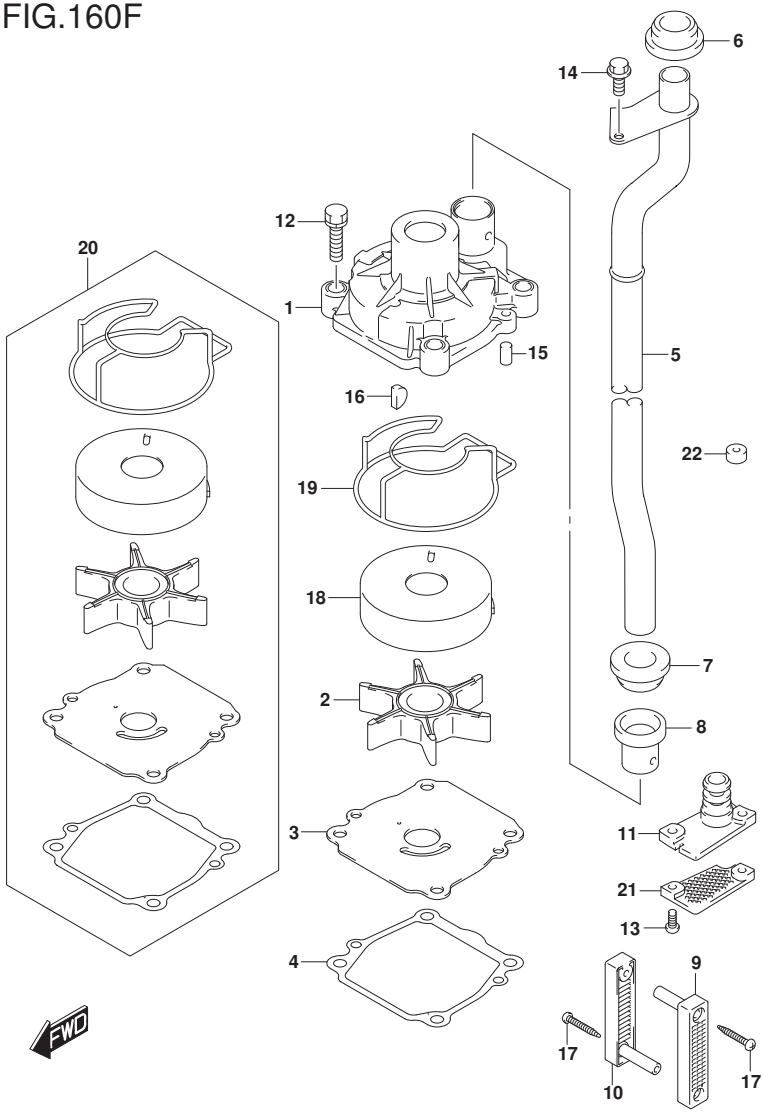

FIG.160F (1-D-5) WATER PUMP (DF50AVT E01)(DF50AVTH E01)

REF NO.	PART NO.	DESCRIPTION	Q'TY	REMARKS
1	17410-99E10	CASE, WATER PUMP	1	
2	17461-87E12	IMPELLER, WATER PUMP	1	
3	17471-99E00	PANEL, PUMP CASE UNDER	1	
4	17472-87E10	GASKET, PUMP CASE PANEL	1	
5	17560-88L30	TUBE, WATER (L)	1	
6	17562-87L00	BUSH, WATER TUBE UPPER	1	
7	17562-87L00	BUSH, WATER TUBE LOWER	1	
8	17564-87D00	BUSH, WATER PUMP CASE	1	
9	17631-90J00	FILTER, WATER PORT SIDE	1	
10	17632-90J00	FILTER, WATER STBD SIDE	1	
11	17635-90J00	PLUG, SUB WATER TUBE	1	
12	29116-93J10	BOLT	4	
13	09125-05046	SCREW (5X12)	2	
14	09116-06236	BOLT (6X16)	1	
15	09202-06031	PIN (6X12)	2	
16	09420-04009	KEY	1	
17	09132-04034	SCREW (4X18)	2	
18	17413-99E11	SLEEVE, WATER PUMP CASE	1	
19	17416-99E10	SEALING, WATER PUMP CASE	1	
20	17400-99E10	KIT, WATER PUMP REPAIR	1	OPT
21	17635-87E10	PLATE, GEAR CASE	1	OPT
22	55321-87J11	ANODE (MAGNESIUM)	1	OPT

DF50AVT E01
DF50AVTH E01

DF60A_E01_018_160F
WATER PUMP

FIG.160G

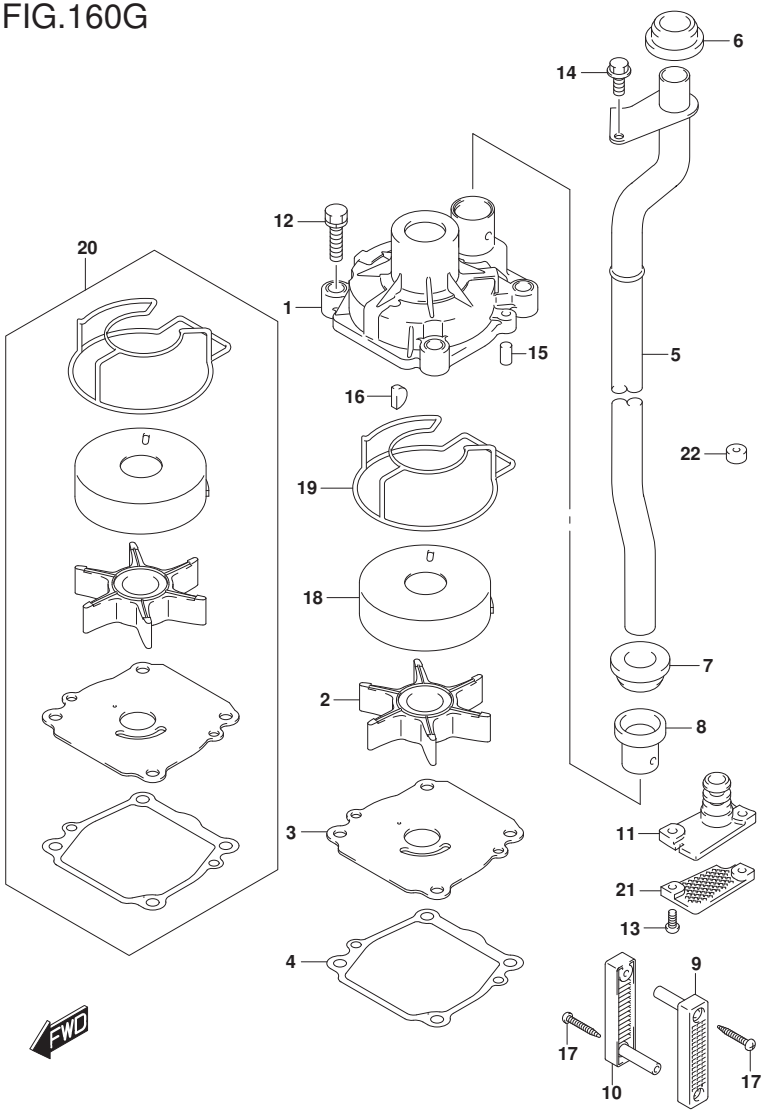

FIG.160G (1-D-6) WATER PUMP (DF60AVT E01)(DF60AVTH E01)

REF NO.	PART NO.	DESCRIPTION	Q'TY	REMARKS
1	17410-99E10	CASE, WATER PUMP	1	
2	17461-87E12	IMPELLER, WATER PUMP	1	
3	17471-99E00	PANEL, PUMP CASE UNDER	1	
4	17472-87E10	GASKET, PUMP CASE PANEL	1	
5-1	17560-88L30	TUBE, WATER (L)	1	W/TRANSOM(L)
5-2	17560-88L40	TUBE, WATER (X)	1	W/TRANSOM(X)
6	17562-87L00	BUSH, WATER TUBE UPPER	1	
7	17562-87L00	BUSH, WATER TUBE LOWER	1	
8	17564-87D00	BUSH, WATER PUMP CASE	1	
9	17631-90J00	FILTER, WATER PORT SIDE	1	
10	17632-90J00	FILTER, WATER STBD SIDE	1	
11	17635-90J00	PLUG, SUB WATER TUBE	1	
12	29116-93J10	BOLT	4	
13	09125-05046	SCREW (5X12)	2	
14	09116-06236	BOLT (6X16)	1	
15	09202-06031	PIN (6X12)	2	
16	09420-04009	KEY	1	
17	09132-04034	SCREW (4X18)	2	
18	17413-99E11	SLEEVE, WATER PUMP CASE	1	
19	17416-99E10	SEALING, WATER PUMP CASE	1	
20	17400-99E10	KIT, WATER PUMP REPAIR	1	OPT
21	17635-87E10	PLATE, GEAR CASE	1	OPT
22	55321-87J11	ANODE (MAGNESIUM)	1	OPT

DF60AVT E01
DF60AVTH E01

DF60A_E01_018_160G
WATER PUMP

FIG.160H

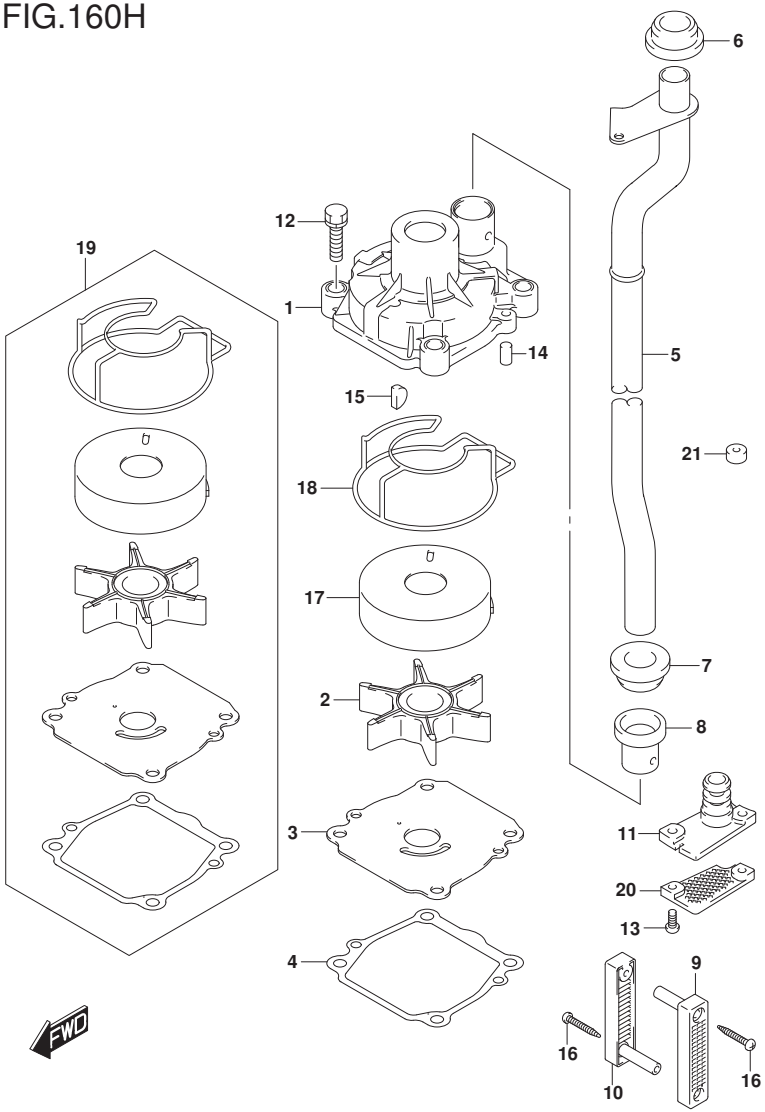

FIG.160H (1-D-7) WATER PUMP (DF60AVT E40)(DF60AVTH E40)

REF NO.	PART NO.	DESCRIPTION	Q'TY	REMARKS
1	17410-99E10	CASE, WATER PUMP	1	
2	17461-87E12	IMPELLER, WATER PUMP	1	
3	17471-99E10	PANEL, PUMP CASE UNDER	1	
4	17472-87E10	GASKET, PUMP CASE PANEL	1	
5-1	17560-88L30	TUBE, WATER (L)	1	W/TRANSOM(L)
5-2	17560-88L40	TUBE, WATER (X)	1	W/TRANSOM(X)
6	17562-87L00	BUSH, WATER TUBE UPPER	1	
7	17562-87L00	BUSH, WATER TUBE LOWER	1	
8	17564-87D00	BUSH, WATER PUMP CASE	1	
9	17631-90J00	FILTER, WATER PORT SIDE	1	
10	17632-90J00	FILTER, WATER STBD SIDE	1	
11	17635-90J00	PLUG, SUB WATER TUBE	1	
12	29116-93J10	BOLT	4	
13	09125-05046	SCREW (5X12)	2	
14	09202-06031	PIN (6X12)	2	
15	09420-04009	KEY	1	
16	09132-04034	SCREW (4X18)	2	
17	17413-99E21	SLEEVE, WATER PUMP CASE	1	
18	17416-99E10	SEALING, WATER PUMP CASE	1	
19	17400-99E10	KIT, WATER PUMP REPAIR	1	OPT
20	17635-87E10	PLATE, GEAR CASE	1	OPT
21	55321-87J11	ANODE (MAGNESIUM)	1	OPT

DF60AVT E40
DF60AVTH E40

DF60A_E01_018_160H
WATER PUMP

FIG.162A

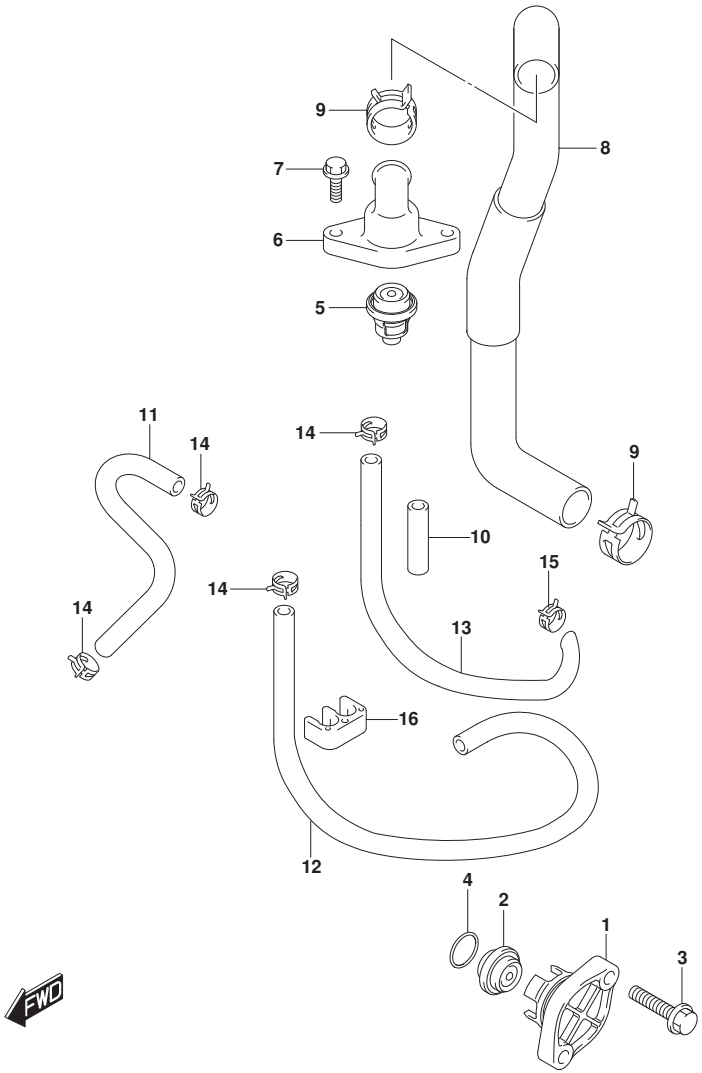

FIG.162A (1-D-8) THERMOSTAT (DF40A)(DF40AST)(DF50A)(DF60A)

REF NO.	PART NO.	DESCRIPTION	Q'TY	REMARKS
1-1	17611-90J00-YAY	COVER, WATER PRESS VALVE (BLACK)	1	
1-2	17611-90J00-Y5S	COVER, WATER PRESS VALVE (WHITE)	1	
2	17660-99E01	VALVE, WATER PRESSURE	1	
3	09116-06121	BOLT (6X25)	2	
4	09280-26006	O RING (D:3.1,ID:26.4)	1	
5	17670-93953	THERMOSTAT (60C)	1	
6	17681-88L00	COVER, THERMOSTAT	1	
7	01550-0620C	BOLT	2	
8	11196-88L00	HOSE, WATER RETURN	1	
9	09401-25406	CLIP	2	
10	18498-94J20	PROTECTOR, WATER HOSE	2	L:320->50
11	17712-88L00	HOSE (SEPARATOR TO INSP)	1	
12	09352-50903-600	HOSE (5X9X600)	1	L:600->500
13	09359-50901-980	HOSE	1	L:980->250
14	09401-08413	CLIP	4	
15	09401-10415	CLIP	1	
16	09408-00175	CLAMP	1	

DF40A E01
DF40AST E34
DF50A E01
DF60A E01
DF60A E40

DF60A_E01_018_162A
THERMOSTAT

FIG.162B

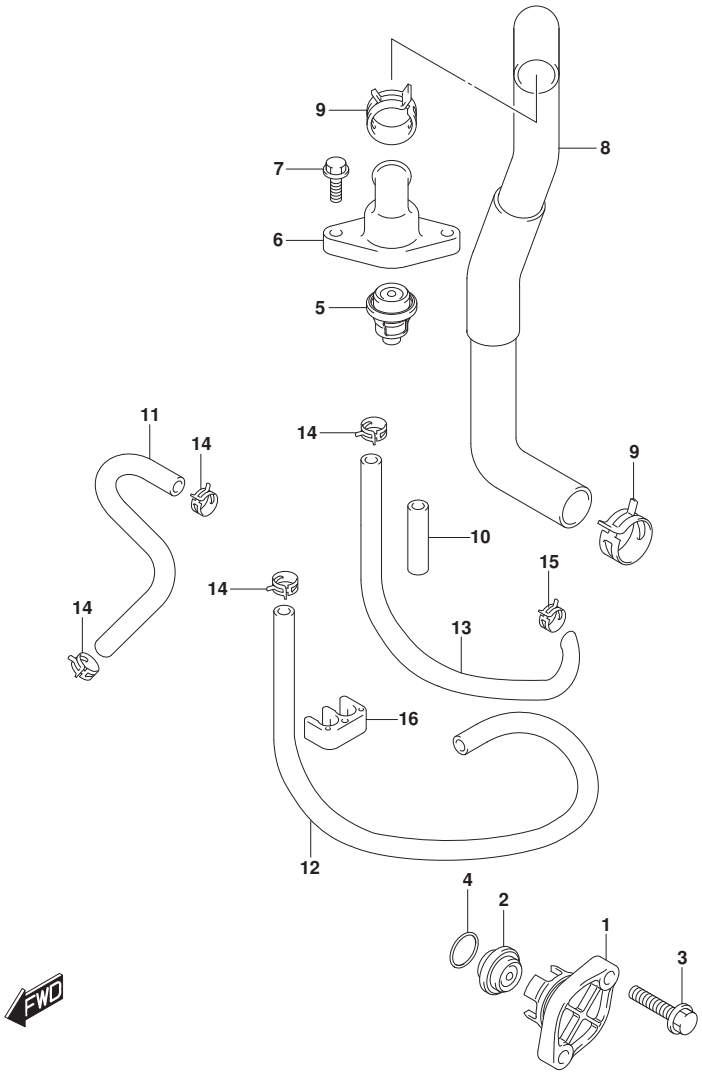

FIG.162B (1-D-9) THERMOSTAT (DF40AQH)(DF40ATH)(DF50ATH)(DF60AQH)(DF60ATH)

REF NO.	PART NO.	DESCRIPTION	Q'TY	REMARKS
1	17611-90J00-YAY	COVER, WATER PRESS VALVE (BLACK)	1	
2	17660-99E01	VALVE, WATER PRESSURE	1	
3	09116-06121	BOLT (6X25)	2	
4	09280-26006	O RING (D:3.1,ID:26.4)	1	
5	17670-93953	THERMOSTAT (60C)	1	
6	17681-88L00	COVER, THERMOSTAT	1	
7	01550-0620C	BOLT	2	
8	11196-88L00	HOSE, WATER RETURN	1	
9	09401-25406	CLIP	2	
10	18498-94J20	PROTECTOR, WATER HOSE	2	L:320->50
11	17712-88L00	HOSE (SEPARATOR TO INSP)	1	
12	09352-50903-600	HOSE (5X9X600)	1	L:600->500
13	09359-50901-980	HOSE	1	L:980->250
14	09401-08413	CLIP	4	
15	09401-10415	CLIP	1	
16	09408-00175	CLAMP	1	

DF40AQH E01
DF40ATH E01
DF50ATH E01
DF60AQH E01
DF60AQH E40
DF60ATH E01
DF60ATH E40

DF60A_E01_018_162B
THERMOSTAT

FIG.162C

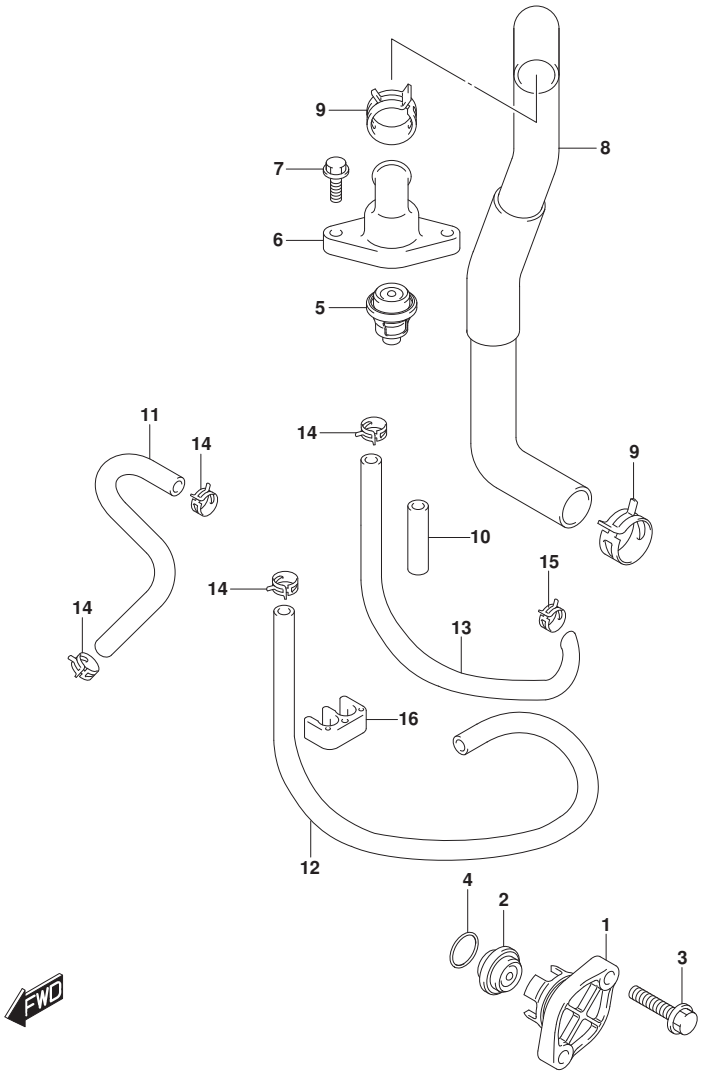

FIG.162C (1-D-10) THERMOSTAT (DF50AVT)(DF50AVTH)(DF60AVT)(DF60AVTH)

REF NO.	PART NO.	DESCRIPTION	Q'TY	REMARKS
1	17611-90J00-YAY	COVER, WATER PRESS VALVE (BLACK)	1	
2	17660-99E01	VALVE, WATER PRESSURE	1	
3	09116-06121	BOLT (6X25)	2	
4	09280-26006	O RING (D:3.1,ID:26.4)	1	
5	17670-93953	THERMOSTAT (60C)	1	
6	17681-88L00	COVER, THERMOSTAT	1	
7	01550-0620C	BOLT	2	
8	11196-88L00	HOSE, WATER RETURN	1	
9	09401-25406	CLIP	2	
10	18498-94J20	PROTECTOR, WATER HOSE	2	L:320->50
11	17712-88L00	HOSE (SEPARATOR TO INSP)	1	
12	09352-50903-600	HOSE (5X9X600)	1	L:600->500
13	09359-50901-980	HOSE	1	L:980->250
14	09401-08413	CLIP	4	
15	09401-10415	CLIP	1	
16	09408-00175	CLAMP	1	

DF50AVT E01
DF50AVTH E01
DF60AVT E01
DF60AVT E40
DF60AVTH E01
DF60AVTH E40

DF60A_E01_018_162C
THERMOSTAT

FIG.163A

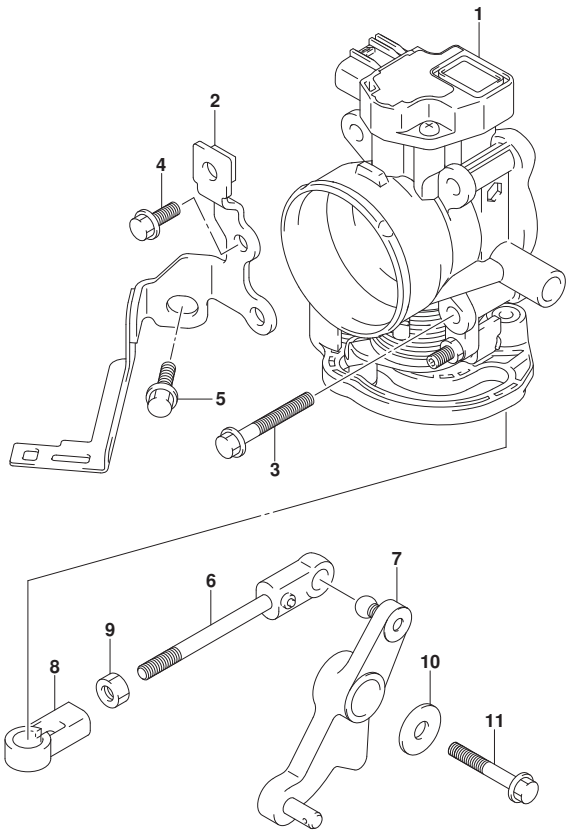

FIG.163A (1-D-11) THROTTLE BODY (DF40A)(DF50A)(DF60A)(DF50AVT)(DF60AVT)

REF NO.	PART NO.	DESCRIPTION	Q'TY	REMARKS
1	13300-88L01	BODY ASSY, THROTTLE	1	
2	13315-88L00	BRACKET, THROTTLE BODY	1	
3	01550-0645C	BOLT	4	
4	01550-0616C	BOLT	2	
5	01550-0820C	BOLT	1	
6	13510-88L00	ROD, THROTTLE	1	
7	19120-88L01	LEVER, THROTTLE	1	
8	19131-95502	CONNECTOR, THROTTLE ROD	1	
9	09140-05005	NUT	1	
10	09160-06047	WASHER (6.5X20X2)	1	
11	01550-0640C	BOLT	1	

DF40A E01
DF50A E01
DF60A E01
DF60A E40
DF50AVT E01
DF60AVT E01
DF60AVT E40

DF60A_E01_018_163A
THROTTLE BODY

FIG.163B

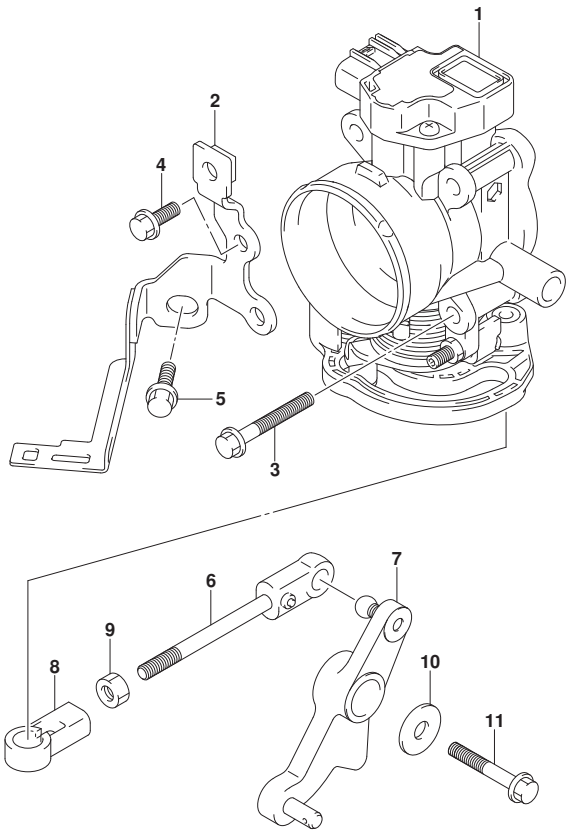

FIG.163B (1-D-12) THROTTLE BODY (DF40AQH)(DF40ATH)(DF50ATH)

REF NO.	PART NO.	DESCRIPTION	Q'TY	REMARKS
1	13300-88L01	BODY ASSY, THROTTLE	1	
2	13315-88L00	BRACKET, THROTTLE BODY	1	
3	01550-0645C	BOLT	4	
4	01550-0616C	BOLT	2	
5	01550-0820C	BOLT	1	
6	13510-88L00	ROD, THROTTLE	1	
7	19120-88L11	LEVER, THROTTLE	1	
8	19131-95502	CONNECTOR, THROTTLE ROD	1	
9	09140-05005	NUT	1	
10	09160-06047	WASHER (6.5X20X2)	1	
11	01550-0640C	BOLT	1	

DF40AQH E01
DF40ATH E01
DF50ATH E01

DF60A_E01_018_163B
THROTTLE BODY

FIG.163C

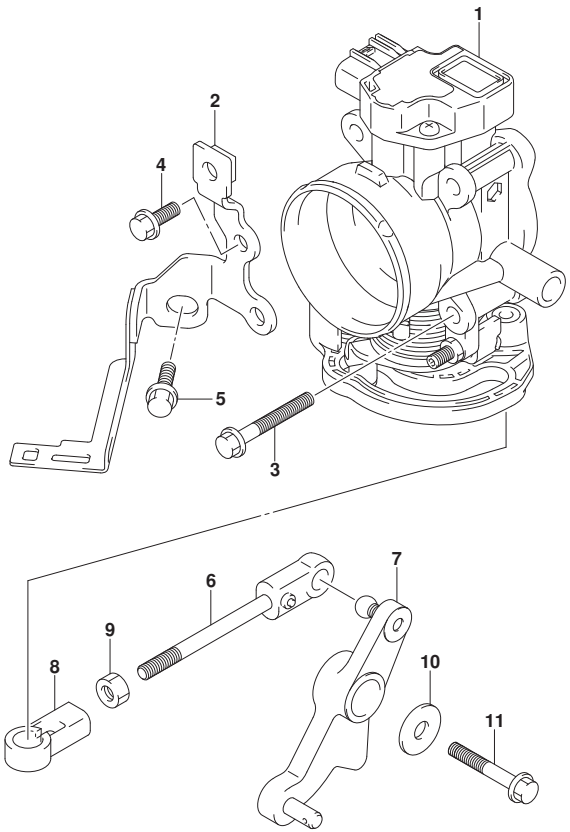

FIG.163C (1-D-13) THROTTLE BODY (DF60AQH)(DF60ATH)(DF50AVTH)(DF60AVTH)

REF NO.	PART NO.	DESCRIPTION	Q'TY	REMARKS
1	13300-88L01	BODY ASSY, THROTTLE	1	
2	13315-88L00	BRACKET, THROTTLE BODY	1	
3	01550-0645C	BOLT	4	
4	01550-0616C	BOLT	2	
5	01550-0820C	BOLT	1	
6	13510-88L00	ROD, THROTTLE	1	
7	19120-88L11	LEVER, THROTTLE	1	
8	19131-95502	CONNECTOR, THROTTLE ROD	1	
9	09140-05005	NUT	1	
10	09160-06047	WASHER (6.5X20X2)	1	
11	01550-0640C	BOLT	1	

DF60AQH E01
DF60AQH E40
DF60ATH E01
DF60ATH E40
DF50AVTH E01
DF60AVTH E01
DF60AVTH E40

FIG.163D

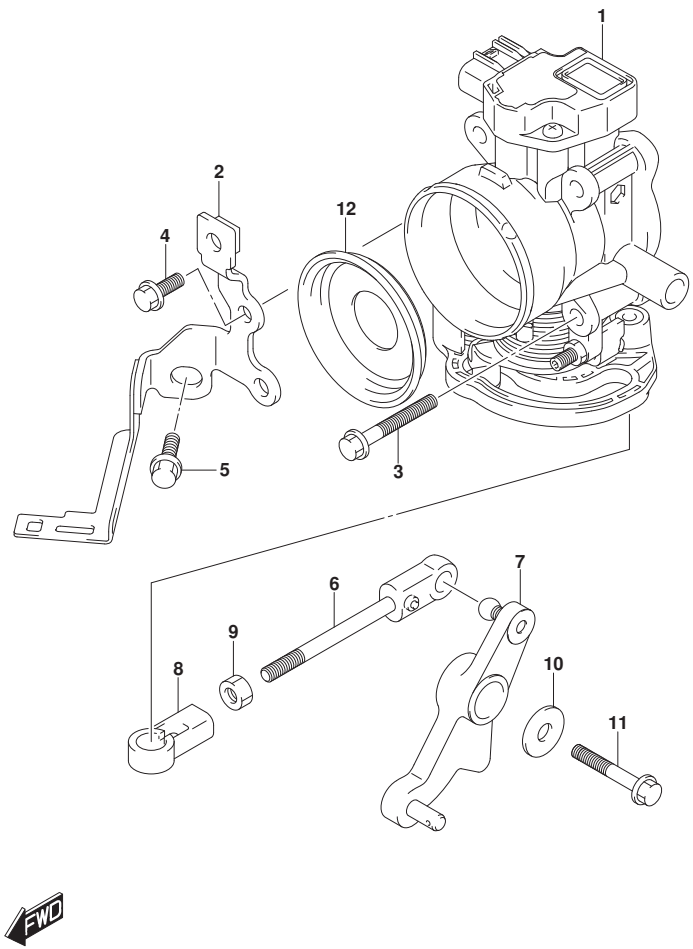

FIG.163D (1-D-14) THROTTLE BODY (DF40AST)

REF NO.	PART NO.	DESCRIPTION	Q'TY	REMARKS
1	13300-88L01	BODY ASSY, THROTTLE	1	
2	13315-88L00	BRACKET, THROTTLE BODY	1	
3	01550-0645C	BOLT	4	
4	01550-0616C	BOLT	2	
5	01550-0820C	BOLT	1	
6	13510-88L00	ROD, THROTTLE	1	
7	19120-88L01	LEVER, THROTTLE	1	
8	19131-95502	CONNECTOR, THROTTLE ROD	1	
9	09140-05005	NUT	1	
10	09160-06047	WASHER (6.5X20X2)	1	
11	01550-0640C	BOLT	1	
12	13815-88L00	RESTRICTOR, INTAKE	1	

DF40AST E34

FIG.175A

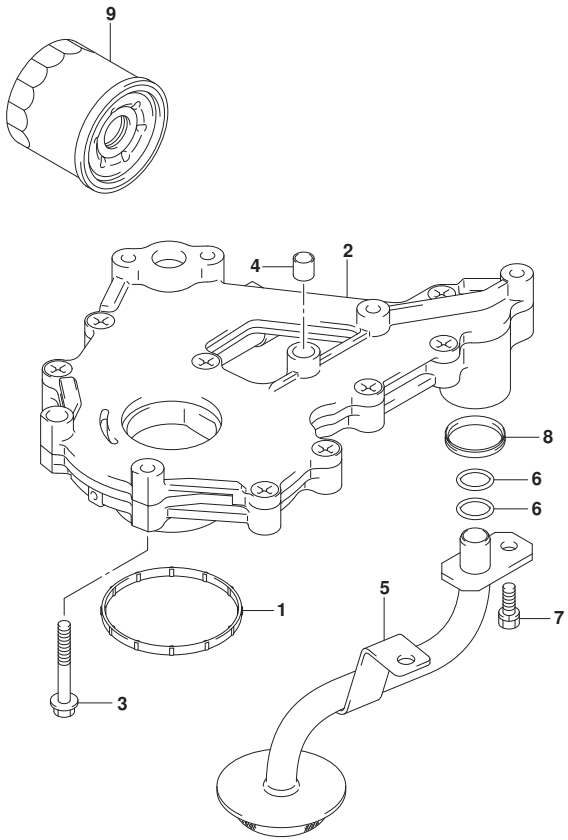

FIG.175A (1-D-15) OIL PUMP

REF NO.	PART NO.	DESCRIPTION	Q'TY	REMARKS
1	11433-88L00	GASKET, UNDER OIL SEAL	1	
2	16400-88L00	PUMP ASSY, OIL	1	
3	01547-0640A	BOLT	7	
4	04211-09109	PIN	2	
5	16520-88L00	STRAINER, OIL PUMP	1	
6	09280-12008	O RING (D:2.4,ID:12.3)	2	
7	01570-0616A	BOLT	2	
8	16519-87L00	SEAL, ENGINE HOLDER	1	
9	16510-87J00	FILTER ASSY, OIL	1	

FIG.180A

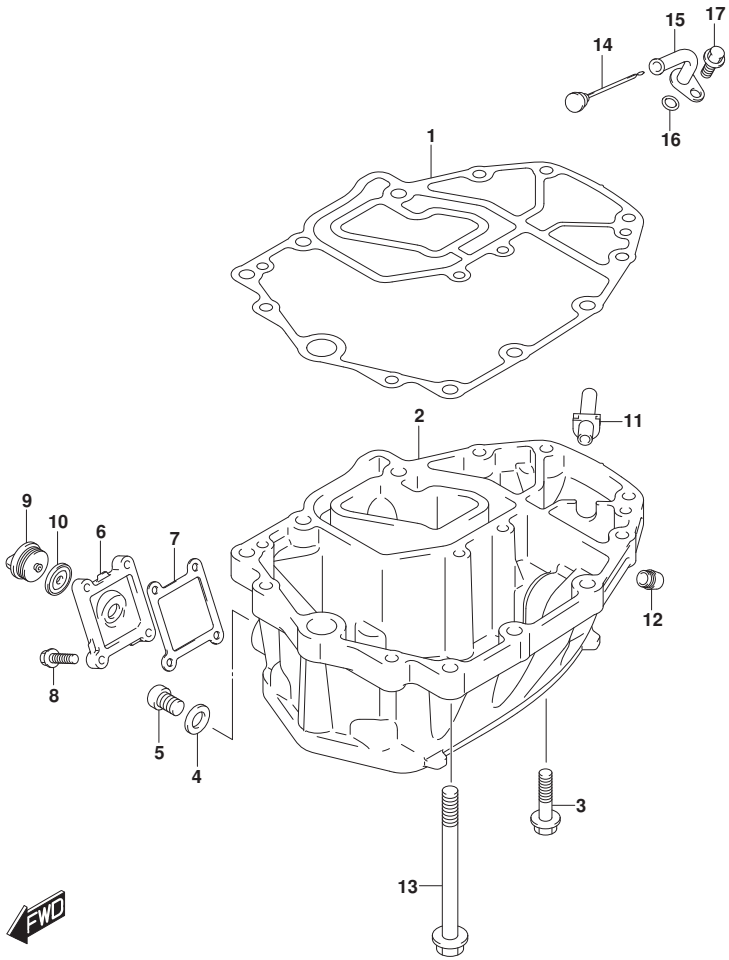

FIG.180A (1-E-2) OIL PAN (DF40A)(DF40AST)(DF50A)(DF60A)

REF NO.	PART NO.	DESCRIPTION	Q'TY	REMARKS
1	11489-88L01	GASKET, OIL PAN	1	
2-1	11501-88L01-YAY	PAN, OIL (BLACK)	1	
2-2	11501-88L01-Y5S	PAN, OIL (WHITE)	1	
3	09116-08128	BOLT (8X40)	6	
4	09168-12012	GASKET (12.5X20X2.5)	1	
5	09248-12009	PLUG (12X18.65)	1	OIL DRAIN
6-1	11551-88L00-YAY	COVER, WATER JACKET OIL PAN (BLACK)	1	
6-2	11551-88L00-Y5S	COVER, WATER JACKET OIL PAN (WHITE)	1	
7	11552-88L00	GASKET, OIL PAN WTR JKT COV	1	
8	09116-06121	BOLT (6X25)	4	
9	17913-93J00	PLUG, WATER	1	
10	17914-93J00	GASKET, WATER PLUG	1	
11	11543-88L00	SILENCER, EXHAUST	1	
12	43112-99E00	PIPE, EXHAUST	1	
13	09116-10124	BOLT (10X150)	6	
14	16910-88L00	GAUGE, OIL LEVEL	1	
15	16930-88L00	GUIDE, OIL LEVEL GAUGE	1	
16	09280-09008	O RING (D:2.1,ID:8.8)	1	
17	01550-0612C	BOLT	1	

DF40A E01
DF40AST E34
DF50A E01
DF60A E01
DF60A E40

DF60A_E01_018_180A
OIL PAN

FIG.180B

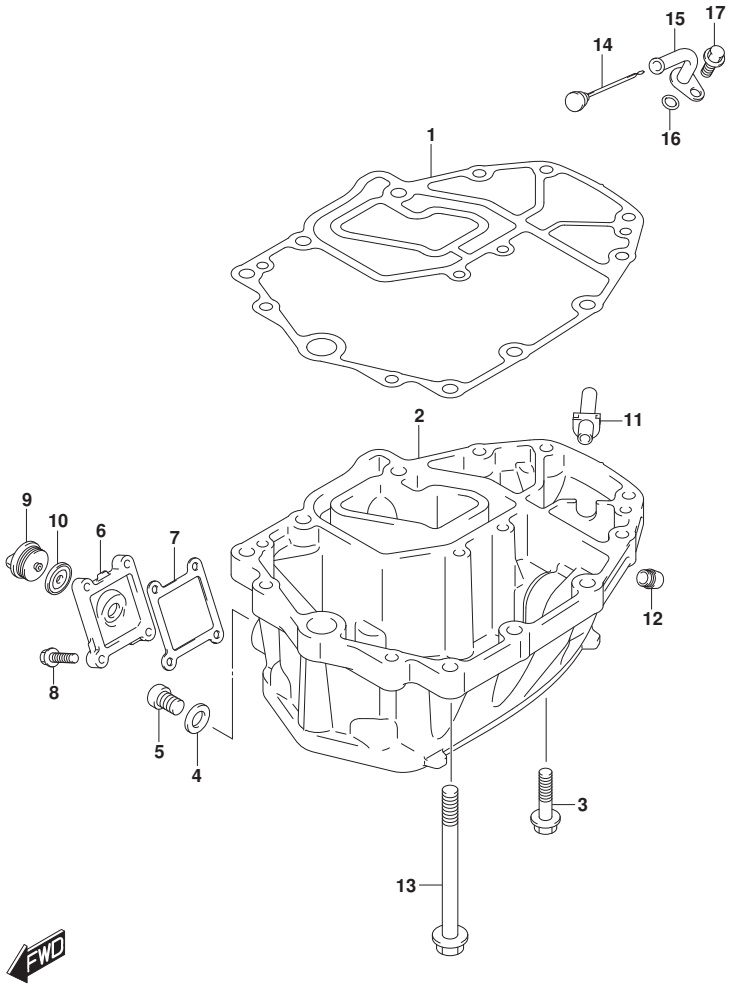

FIG.180B (1-E-3) OIL PAN (DF40AQH)(DF40ATH)(DF50ATH)

REF NO.	PART NO.	DESCRIPTION	Q'TY	REMARKS
1	11489-88L01	GASKET, OIL PAN	1	
2	11501-88L01-YAY	PAN, OIL (BLACK)	1	
3	09116-08128	BOLT (8X40)	6	
4	09168-12012	GASKET (12.5X20X2.5)	1	
5	09248-12009	PLUG (12X18.65)	1	OIL DRAIN
6	11551-88L00-YAY	COVER, WATER JACKET OIL PAN (BLACK)	1	
7	11552-88L00	GASKET, OIL PAN WTR JKT COV	1	
8	09116-06121	BOLT (6X25)	4	
9	17913-93J00	PLUG, WATER	1	
10	17914-93J00	GASKET, WATER PLUG	1	
11	11543-88L00	SILENCER, EXHAUST	1	
12	43112-99E00	PIPE, EXHAUST	1	
13	09116-10124	BOLT (10X150)	6	
14	16910-88L00	GAUGE, OIL LEVEL	1	
15	16930-88L00	GUIDE, OIL LEVEL GAUGE	1	
16	09280-09008	O RING (D:2.1,ID:8.8)	1	
17	01550-0612C	BOLT	1	

DF40AQH E01
DF40ATH E01
DF50ATH E01

DF60A_E01_018_180B
OIL PAN

FIG.180C

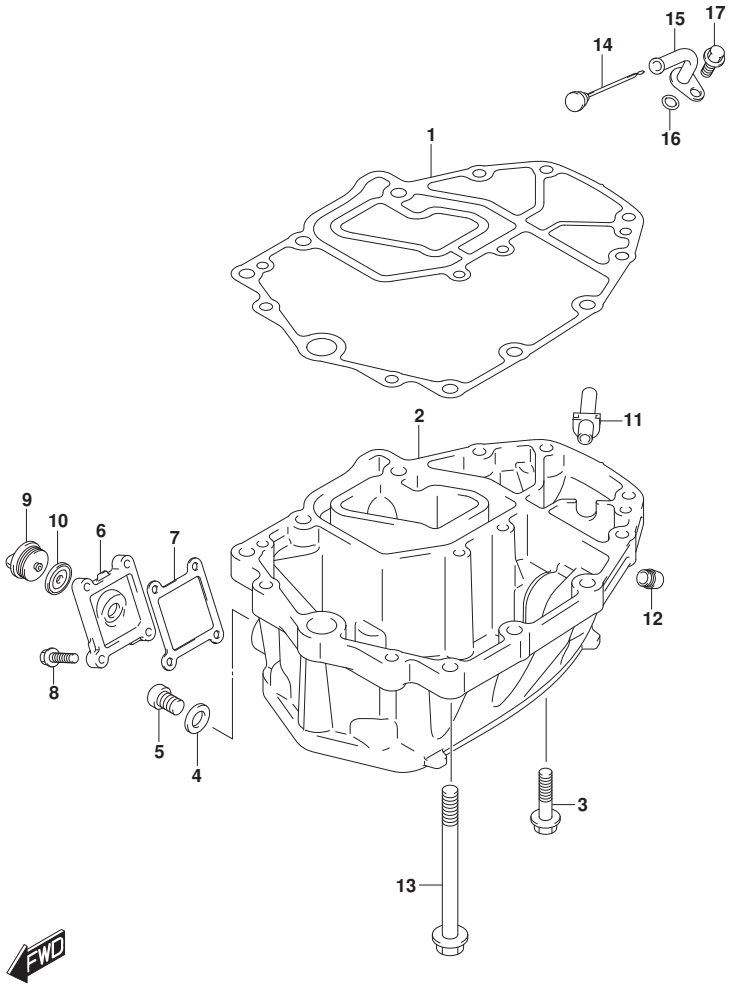

FIG.180C (1-E-4) OIL PAN (DF60AQH)(DF60ATH)(DF50AVT)(DF50AVTH)(DF60AVT)(DF60

REF NO.	PART NO.	DESCRIPTION	Q'TY	REMARKS
1	11489-88L01	GASKET, OIL PAN	1	
2	11501-88L01-YAY	PAN, OIL (BLACK)	1	
3	09116-08128	BOLT (8X40)	6	
4	09168-12012	GASKET (12.5X20X2.5)	1	
5	09248-12009	PLUG (12X18.65)	1	OIL DRAIN
6	11551-88L00-YAY	COVER, WATER JACKET OIL PAN (BLACK)	1	
7	11552-88L00	GASKET, OIL PAN WTR JKT COV	1	
8	09116-06121	BOLT (6X25)	4	
9	17913-93J00	PLUG, WATER	1	
10	17914-93J00	GASKET, WATER PLUG	1	
11	11543-88L00	SILENCER, EXHAUST	1	
12	43112-99E00	PIPE, EXHAUST	1	
13	09116-10124	BOLT (10X150)	6	
14	16910-88L00	GAUGE, OIL LEVEL	1	
15	16930-88L00	GUIDE, OIL LEVEL GAUGE	1	
16	09280-09008	O RING (D:2.1,ID:8.8)	1	
17	01550-0612C	BOLT	1	

DF60AQH E01
DF60AQH E40
DF60ATH E01
DF60ATH E40
DF50AVT E01
DF50AVTH E01
DF60AVT E01
DF60AVT E40
DF60AVTH E01
DF60AVTH E40

DF60A_E01_018_180C
OIL PAN

FIG.204A

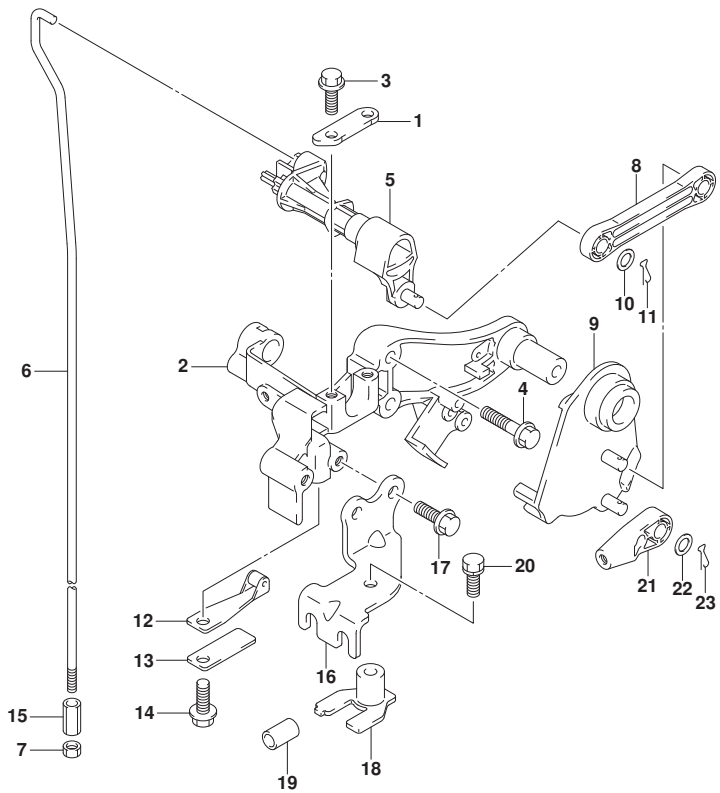

FIG.204A (1-E-5) CLUTCH SHAFT (DF40A E01)(DF40AST E34)(DF50A E01)

REF NO.	PART NO.	DESCRIPTION	Q'TY	REMARKS
1	21126-88L00	HOLDER, CLUTCH SHAFT	1	
2	21151-88L00	HOLDER, CLUTCH LEVER	1	
3	01550-0616C	BOLT	2	
4	01550-0630C	BOLT	2	
5	21210-88L01	SHAFT, CLUTCH	1	
6-1	23111-88L00	ROD, CLUTCH (S)	1	W/TRANSOM(S)
6-2	23111-88L10	ROD, CLUTCH (L)	1	W/TRANSOM(L)
7	29141-93J00	NUT, CLUTCH ROD	1	
8	23115-88L00	LINK, CLUTCH LEVER	1	
9	23210-88L00	LEVER, CLUTCH CONTROL	1	
10	09160-06055	WASHER (7X12X1)	2	
11	09385-06012	CLIP	2	
12	23213-89J01	SPRING, NOTCH PLATE NO.1	1	
13	23214-89J00	SPRING, NOTCH PLATE NO.2	1	
14	01550-0612C	BOLT	1	
15	23311-95J00	TURNBUCKLE, CLUTCH ROD	1	
16	67341-88L01	HOLDER, REMOCON CABLE	1	
17	01550-0616C	BOLT	2	
18	67343-88L01	STOPPER, REMOCON CABLE	1	
19	09352-70103-600	HOSE (7X10.2X600)	2	L:600->14
20	01570-06167	BOLT	1	
21	67467-89J01	CONNECTOR, REMOCON CABLE	2	
22	09160-06055	WASHER (7X12X1)	2	
23	09385-06012	CLIP	2	

DF40A E01
DF40AST E34
DF50A E01

FIG.204B

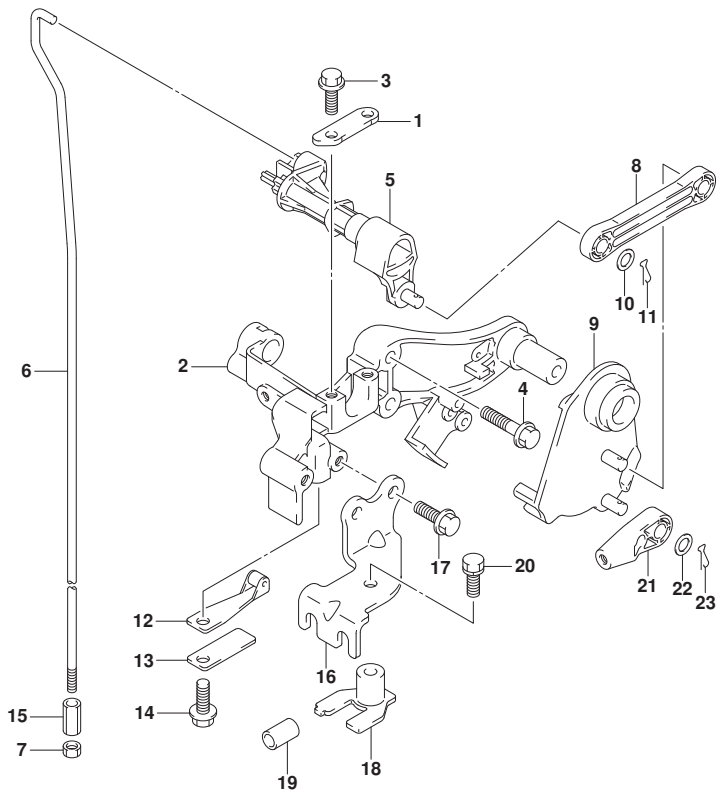

FIG.204B (1-E-6) CLUTCH SHAFT (DF40AQH E01)(DF40ATH E01)(DF50ATH E01)(DF60A

REF NO.	PART NO.	DESCRIPTION	Q'TY	REMARKS
1	21126-88L00	HOLDER, CLUTCH SHAFT	1	
2	21151-88L00	HOLDER, CLUTCH LEVER	1	
3	01550-0616C	BOLT	2	
4	01550-0630C	BOLT	2	
5	21210-88L01	SHAFT, CLUTCH	1	
6	23111-88L10	ROD, CLUTCH (L)	1	
7	29141-93J00	NUT, CLUTCH ROD	1	
8	23115-88L00	LINK, CLUTCH LEVER	1	
9	23210-88L00	LEVER, CLUTCH CONTROL	1	
10	09160-06055	WASHER (7X12X1)	2	
11	09385-06012	CLIP	2	
12	23213-89J01	SPRING, NOTCH PLATE NO.1	1	
13	23214-89J00	SPRING, NOTCH PLATE NO.2	1	
14	01550-0612C	BOLT	1	
15	23311-95J00	TURNBUCKLE, CLUTCH ROD	1	
16	67341-88L01	HOLDER, REMOCON CABLE	1	
17	01550-0616C	BOLT	2	
18	67343-88L01	STOPPER, REMOCON CABLE	1	
19	09352-70103-600	HOSE (7X10.2X600)	2	L:600->14
20	01570-06167	BOLT	1	
21	67467-89J01	CONNECTOR, REMOCON CABLE	2	
22	09160-06055	WASHER (7X12X1)	2	
23	09385-06012	CLIP	2	

DF40AQH E01
DF40ATH E01
DF50ATH E01
DF60A E40

FIG.204C

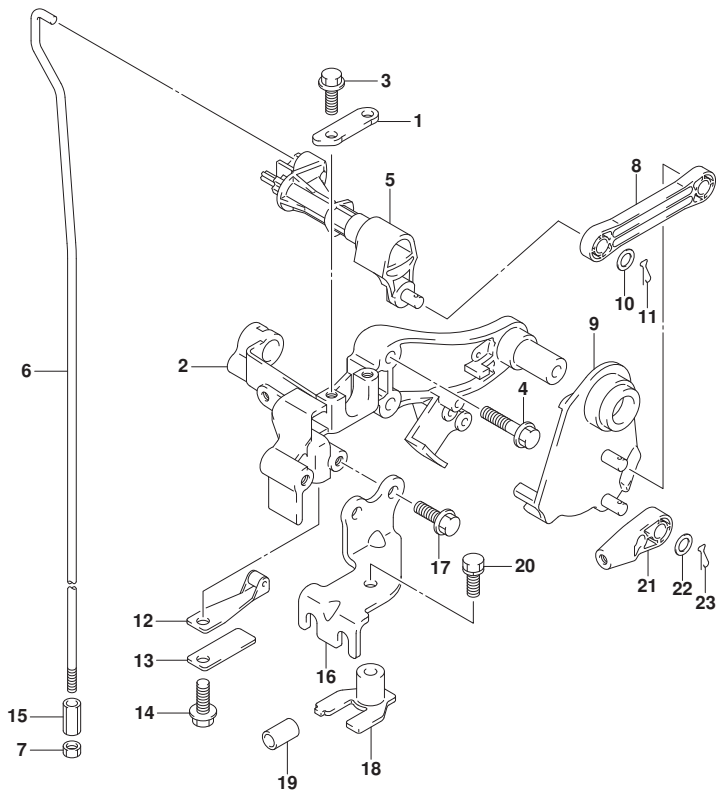

FIG.204C (1-E-7) CLUTCH SHAFT (DF60AQH E01)(DF60AQH E40)

REF NO.	PART NO.	DESCRIPTION	Q'TY	REMARKS
1	21126-88L00	HOLDER, CLUTCH SHAFT	1	
2	21151-88L00	HOLDER, CLUTCH LEVER	1	
3	01550-0616C	BOLT	2	
4	01550-0630C	BOLT	2	
5	21210-88L01	SHAFT, CLUTCH	1	
6	23111-88L10	ROD, CLUTCH (L)	1	
7	29141-93J00	NUT, CLUTCH ROD	1	
8	23115-88L00	LINK, CLUTCH LEVER	1	
9	23210-88L00	LEVER, CLUTCH CONTROL	1	
10	09160-06055	WASHER (7X12X1)	2	
11	09385-06012	CLIP	2	
12	23213-89J01	SPRING, NOTCH PLATE NO.1	1	
13	23214-89J00	SPRING, NOTCH PLATE NO.2	1	
14	01550-0612C	BOLT	1	
15	23311-95J00	TURNBUCKLE, CLUTCH ROD	1	
16	67341-88L01	HOLDER, REMOCON CABLE	1	
17	01550-0616C	BOLT	2	
18	67343-88L01	STOPPER, REMOCON CABLE	1	
19	09352-70103-600	HOSE (7X10.2X600)	2	L:600->14
20	01570-06167	BOLT	1	
21	67467-89J01	CONNECTOR, REMOCON CABLE	2	
22	09160-06055	WASHER (7X12X1)	2	
23	09385-06012	CLIP	2	

DF60AQH E01
DF60AQH E40

FIG.204D

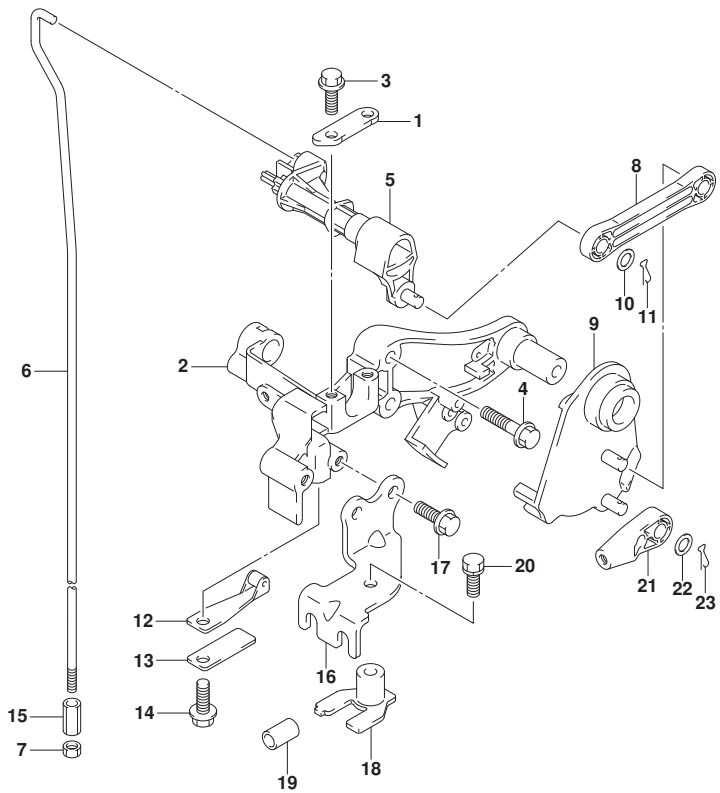

FIG.204D (1-E-8) CLUTCH SHAFT (DF60ATH E01)(DF60ATH E40)

REF NO.	PART NO.	DESCRIPTION	Q'TY	REMARKS
1	21126-88L00	HOLDER, CLUTCH SHAFT	1	
2	21151-88L00	HOLDER, CLUTCH LEVER	1	
3	01550-0616C	BOLT	2	
4	01550-0630C	BOLT	2	
5	21210-88L01	SHAFT, CLUTCH	1	
6	23111-88L10	ROD, CLUTCH (L)	1	
7	29141-93J00	NUT, CLUTCH ROD	1	
8	23115-88L00	LINK, CLUTCH LEVER	1	
9	23210-88L00	LEVER, CLUTCH CONTROL	1	
10	09160-06055	WASHER (7X12X1)	2	
11	09385-06012	CLIP	2	
12	23213-89J01	SPRING, NOTCH PLATE NO.1	1	
13	23214-89J00	SPRING, NOTCH PLATE NO.2	1	
14	01550-0612C	BOLT	1	
15	23311-95J00	TURNBUCKLE, CLUTCH ROD	1	
16	67341-88L01	HOLDER, REMOCON CABLE	1	
17	01550-0616C	BOLT	2	
18	67343-88L01	STOPPER, REMOCON CABLE	1	
19	09352-70103-600	HOSE (7X10.2X600)	2	L:600->14
20	01570-06167	BOLT	1	
21	67467-89J01	CONNECTOR, REMOCON CABLE	2	
22	09160-06055	WASHER (7X12X1)	2	
23	09385-06012	CLIP	2	

DF60ATH E01
DF60ATH E40

FIG.204E

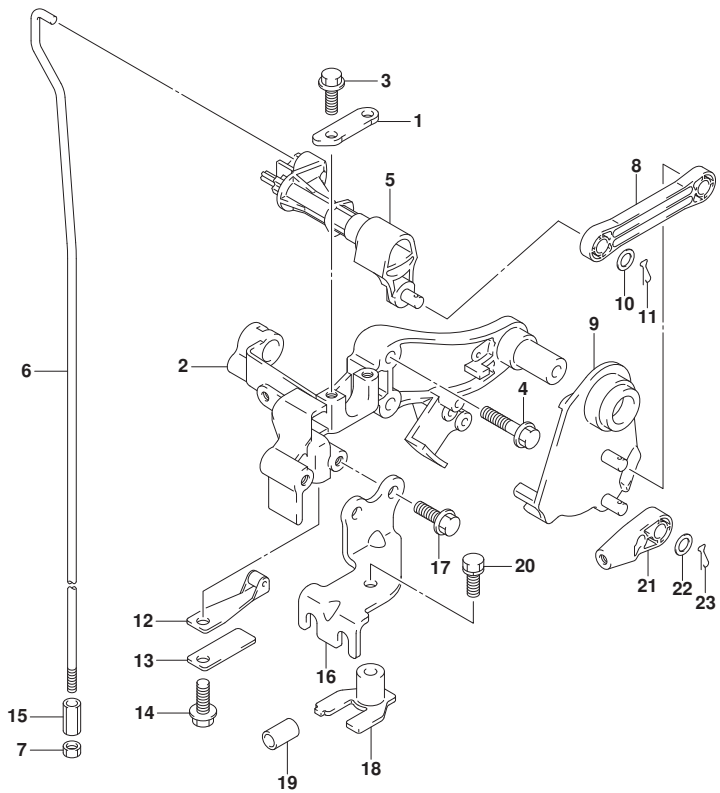

FIG.204E (1-E-9) CLUTCH SHAFT (DF60A E01)

REF NO.	PART NO.	DESCRIPTION	Q'TY	REMARKS
1	21126-88L00	HOLDER, CLUTCH SHAFT	1	
2	21151-88L00	HOLDER, CLUTCH LEVER	1	
3	01550-0616C	BOLT	2	
4	01550-0630C	BOLT	2	
5	21210-88L01	SHAFT, CLUTCH	1	
6-1	23111-88L00	ROD, CLUTCH (S)	1	W/TRANSOM(S)
6-2	23111-88L10	ROD, CLUTCH (L)	1	W/TRANSOM(L)
				W/TRANSOM(X)
7	29141-93J00	NUT, CLUTCH ROD	1	
8	23115-88L00	LINK, CLUTCH LEVER	1	
9	23210-88L00	LEVER, CLUTCH CONTROL	1	
10	09160-06055	WASHER (7X12X1)	2	
11	09385-06012	CLIP	2	
12	23213-89J01	SPRING, NOTCH PLATE NO.1	1	
13	23214-89J00	SPRING, NOTCH PLATE NO.2	1	
14	01550-0612C	BOLT	1	
15	23311-95J00	TURNBUCKLE, CLUTCH ROD	1	
16	67341-88L01	HOLDER, REMOCON CABLE	1	
17	01550-0616C	BOLT	2	
18	67343-88L01	STOPPER, REMOCON CABLE	1	
19	09352-70103-600	HOSE (7X10.2X600)	2	L:600->14
20	01570-06167	BOLT	1	
21	67467-89J01	CONNECTOR, REMOCON CABLE	2	
22	09160-06055	WASHER (7X12X1)	2	
23	09385-06012	CLIP	2	

DF60A E01

FIG.204F

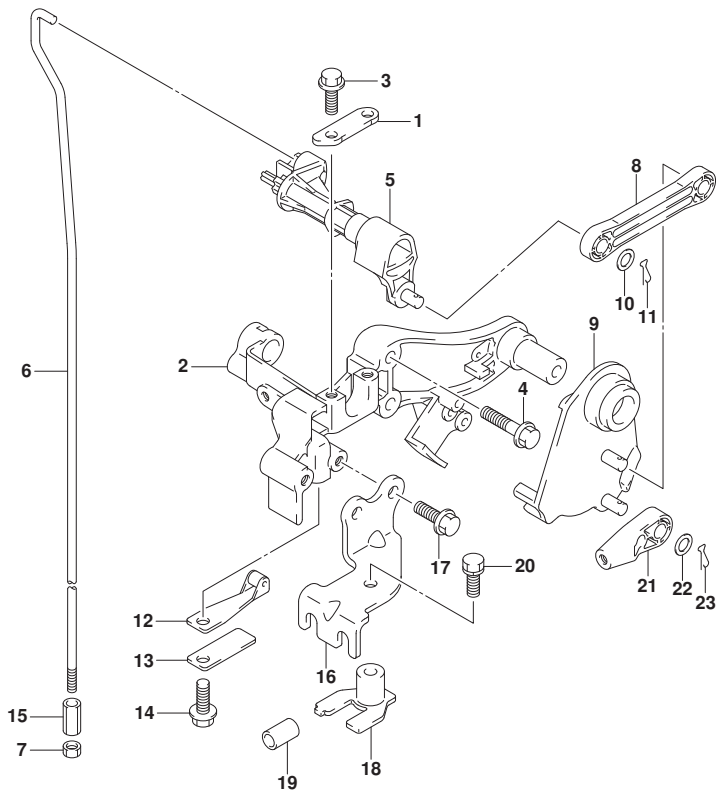

FIG.204F (1-E-10) CLUTCH SHAFT (DF50AVT E01)(DF50AVTH E01)

REF NO.	PART NO.	DESCRIPTION	Q'TY	REMARKS
1	21126-88L00	HOLDER, CLUTCH SHAFT	1	
2	21151-88L00	HOLDER, CLUTCH LEVER	1	
3	01550-0616C	BOLT	2	
4	01550-0630C	BOLT	2	
5	21210-88L01	SHAFT, CLUTCH	1	
6	23111-88L00	ROD, CLUTCH (S)	1	
7	29141-93J00	NUT, CLUTCH ROD	1	
8	23115-88L00	LINK, CLUTCH LEVER	1	
9	23210-88L00	LEVER, CLUTCH CONTROL	1	
10	09160-06055	WASHER (7X12X1)	2	
11	09385-06012	CLIP	2	
12	23213-89J01	SPRING, NOTCH PLATE NO.1	1	
13	23214-89J00	SPRING, NOTCH PLATE NO.2	1	
14	01550-0612C	BOLT	1	
15	23311-95J00	TURNBUCKLE, CLUTCH ROD	1	
16	67341-88L01	HOLDER, REMOCON CABLE	1	
17	01550-0616C	BOLT	2	
18	67343-88L01	STOPPER, REMOCON CABLE	1	
19	09352-70103-600	HOSE (7X10.2X600)	2	L:600->14
20	01570-06167	BOLT	1	
21	67467-89J01	CONNECTOR, REMOCON CABLE	2	
22	09160-06055	WASHER (7X12X1)	2	
23	09385-06012	CLIP	2	

DF50AVT E01
DF50AVTH E01

FIG.204G

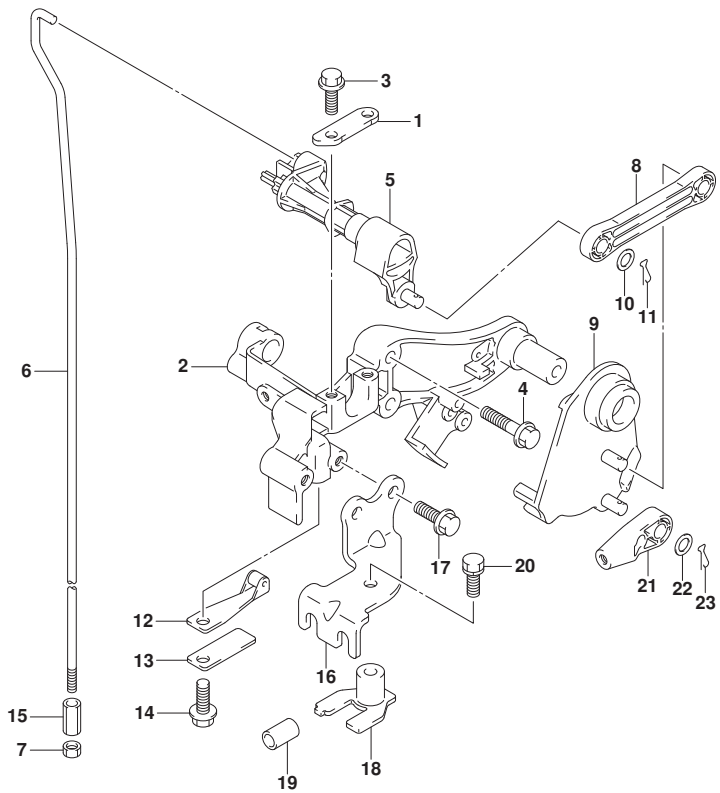

FIG.204G (1-E-11) CLUTCH SHAFT (DF60AVT E01)(DF60AVT E40)(DF60AVTH E01)(DF60

REF NO.	PART NO.	DESCRIPTION	Q'TY	REMARKS
1	21126-88L00	HOLDER, CLUTCH SHAFT	1	
2	21151-88L00	HOLDER, CLUTCH LEVER	1	
3	01550-0616C	BOLT	2	
4	01550-0630C	BOLT	2	
5	21210-88L01	SHAFT, CLUTCH	1	
6-1	23111-88L00	ROD, CLUTCH (S)	1	W/TRANSOM(L)
6-2	23111-88L10	ROD, CLUTCH (L)	1	W/TRANSOM(X)
7	29141-93J00	NUT, CLUTCH ROD	1	
8	23115-88L00	LINK, CLUTCH LEVER	1	
9	23210-88L00	LEVER, CLUTCH CONTROL	1	
10	09160-06055	WASHER (7X12X1)	2	
11	09385-06012	CLIP	2	
12	23213-89J01	SPRING, NOTCH PLATE NO.1	1	
13	23214-89J00	SPRING, NOTCH PLATE NO.2	1	
14	01550-0612C	BOLT	1	
15	23311-95J00	TURNBUCKLE, CLUTCH ROD	1	
16	67341-88L01	HOLDER, REMOCON CABLE	1	
17	01550-0616C	BOLT	2	
18	67343-88L01	STOPPER, REMOCON CABLE	1	
19	09352-70103-600	HOSE (7X10.2X600)	2	L:600->14
20	01570-06167	BOLT	1	
21	67467-89J01	CONNECTOR, REMOCON CABLE	2	
22	09160-06055	WASHER (7X12X1)	2	
23	09385-06012	CLIP	2	

DF60AVT E01
DF60AVT E40
DF60AVTH E01
DF60AVTH E40

DF60A_E01_018_204G
CLUTCH SHAFT

FIG.206A

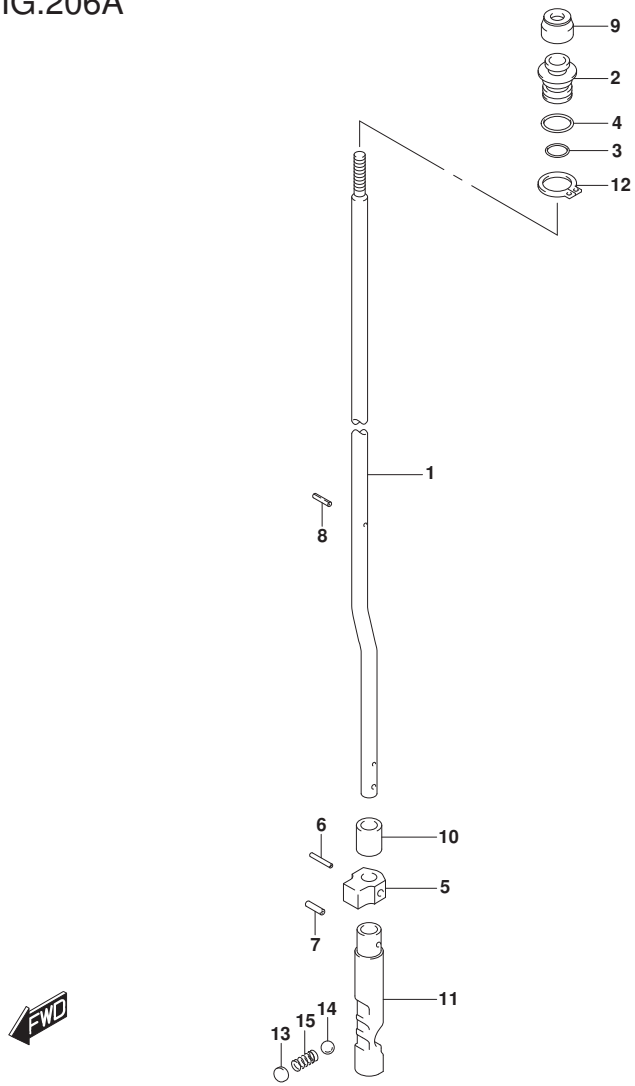

FIG.206A (1-E-12) CLUTCH ROD (DF40A E01)(DF40AST E34)(DF50A E01)

REF NO.	PART NO.	DESCRIPTION	Q'TY	REMARKS
1-1	25111-88L00	ROD, SHIFT (S)	1	W/TRANSOM(S)
1-2	25111-88L10	ROD, SHIFT (L)	1	W/TRANSOM(L)
2	25211-87J00	GUIDE, SHIFT ROD	1	
3	09280-08005	O RING (D:1.7,ID:7.7)	1	
4	09280-11001	O RING (D:2.4,ID:10.8)	1	
5	25212-94401	GUIDE, SHIFT ROD LOWER	1	
6	09205-02013	SPRING PIN (2.5X16)	1	
7	09205-03021	SPRING PIN (3.5X12)	1	
8	09205-02004	SPRING PIN (2.5X12)	1	
9	25223-94400	SEAL, SHIFT ROD DUST	1	
10	25232-96302	MAGNET, GEAR CASE	1	
11	25311-88L00	CAM, SHIFT	1	
12	08331-3115A	CIRCLIP	1	
13	21121-93300	PLATE, DETENT SPRING	1	
14	09260-10005	BALL	1	
15	09440-07078	SPRING	1	

DF40A E01
DF40AST E34
DF50A E01

DF60A_E01_018_206A
CLUTCH ROD

FIG.206B

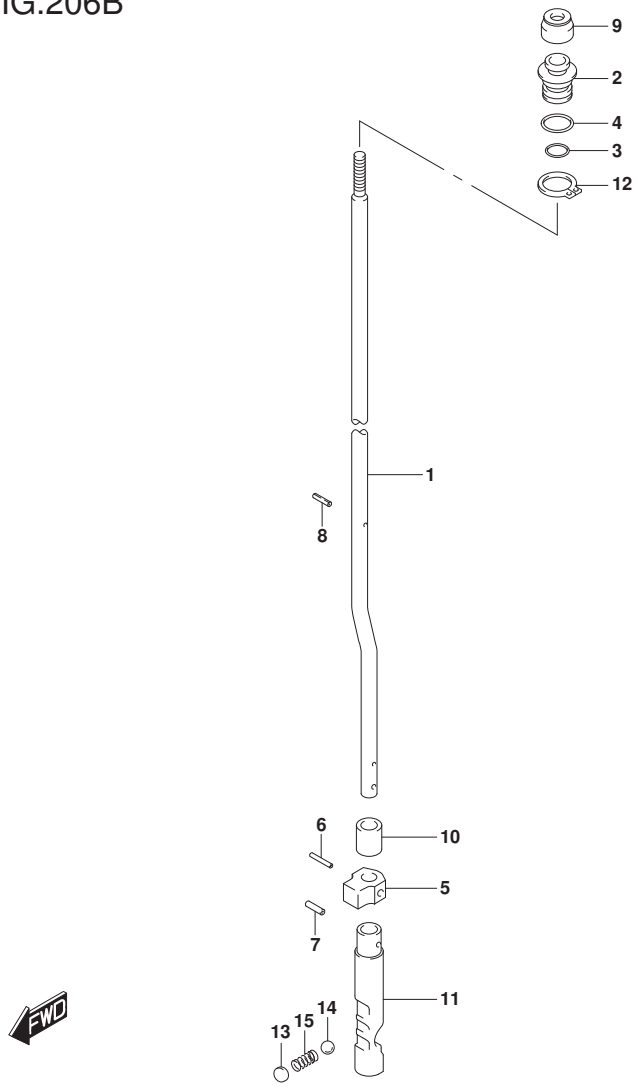

FIG.206B (1-E-13) CLUTCH ROD (DF40AQH E01)(DF40ATH E01)(DF50ATH E01)

REF NO.	PART NO.	DESCRIPTION	Q'TY	REMARKS
1	25111-88L10	ROD, SHIFT (L)	1	
2	25211-87J00	GUIDE, SHIFT ROD	1	
3	09280-08005	O RING (D:1.7,ID:7.7)	1	
4	09280-11001	O RING (D:2.4,ID:10.8)	1	
5	25212-94401	GUIDE, SHIFT ROD LOWER	1	
6	09205-02013	SPRING PIN (2.5X16)	1	
7	09205-03021	SPRING PIN (3.5X12)	1	
8	09205-02004	SPRING PIN (2.5X12)	1	
9	25223-94400	SEAL, SHIFT ROD DUST	1	
10	25232-96302	MAGNET, GEAR CASE	1	
11	25311-88L00	CAM, SHIFT	1	
12	08331-3115A	CIRCLIP	1	
13	21121-93300	PLATE, DETENT SPRING	1	
14	09260-10005	BALL	1	
15	09440-07078	SPRING	1	

DF40AQH E01
DF40ATH E01
DF50ATH E01

DF60A_E01_018_206B
CLUTCH ROD

FIG.206C

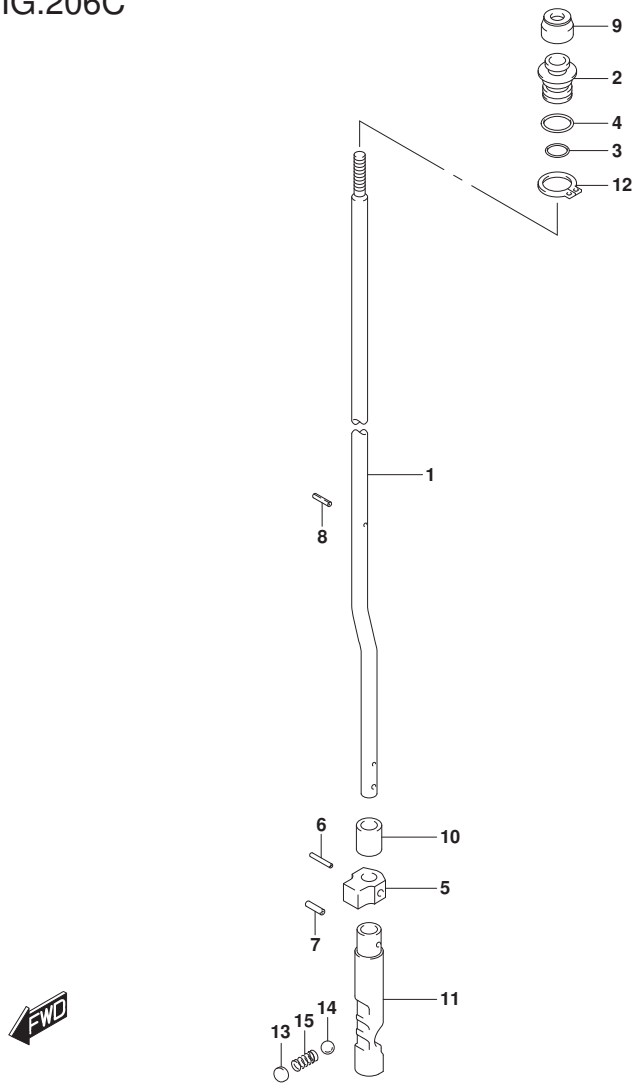

FIG.206C (1-E-14) CLUTCH ROD (DF60A E01)

REF NO.	PART NO.	DESCRIPTION	Q'TY	REMARKS
1-1	25111-88L00	ROD, SHIFT (S)	1	W/TRANSOM(S)
1-2	25111-88L10	ROD, SHIFT (L)	1	W/TRANSOM(L)
1-3	25111-88L20	ROD, SHIFT (X)	1	W/TRANSOM(X)
2	25211-87J00	GUIDE, SHIFT ROD	1	
3	09280-08005	O RING (D:1.7,ID:7.7)	1	
4	09280-11001	O RING (D:2.4,ID:10.8)	1	
5	25212-94401	GUIDE, SHIFT ROD LOWER	1	
6	09205-02013	SPRING PIN (2.5X16)	1	
7	09205-03021	SPRING PIN (3.5X12)	1	
8	09205-02004	SPRING PIN (2.5X12)	1	
9	25223-94400	SEAL, SHIFT ROD DUST	1	
10	25232-96302	MAGNET, GEAR CASE	1	
11	25311-88L00	CAM, SHIFT	1	
12	08331-3115A	CIRCLIP	1	
13	21121-93300	PLATE, DETENT SPRING	1	
14	09260-10005	BALL	1	
15	09440-07078	SPRING	1	

DF60A E01

DF60A_E01_018_206C
CLUTCH ROD

FIG.206D

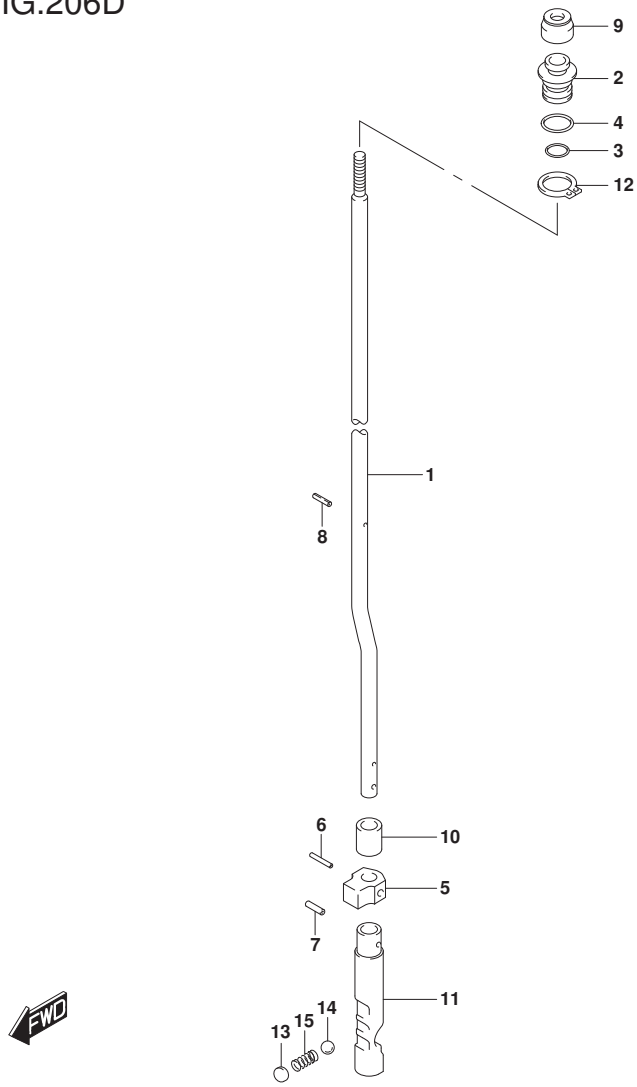

FIG.206D (1-E-15) CLUTCH ROD (DF60A E40)(DF60AQH E01)(DF60AQH E40)

REF NO.	PART NO.	DESCRIPTION	Q'TY	REMARKS
1-1	25111-88L10	ROD, SHIFT (L)	1	W/TRANSOM(L)
1-2	25111-88L20	ROD, SHIFT (X)	1	W/TRANSOM(X)
2	25211-87J00	GUIDE, SHIFT ROD	1	
3	09280-08005	O RING (D:1.7,ID:7.7)	1	
4	09280-11001	O RING (D:2.4,ID:10.8)	1	
5	25212-94401	GUIDE, SHIFT ROD LOWER	1	
6	09205-02013	SPRING PIN (2.5X16)	1	
7	09205-03021	SPRING PIN (3.5X12)	1	
8	09205-02004	SPRING PIN (2.5X12)	1	
9	25223-94400	SEAL, SHIFT ROD DUST	1	
10	25232-96302	MAGNET, GEAR CASE	1	
11	25311-88L00	CAM, SHIFT	1	
12	08331-3115A	CIRCLIP	1	
13	21121-93300	PLATE, DETENT SPRING	1	
14	09260-10005	BALL	1	
15	09440-07078	SPRING	1	

DF60A E40
DF60AQH E01
DF60AQH E40

DF60A_E01_018_206D
CLUTCH ROD

FIG.206E

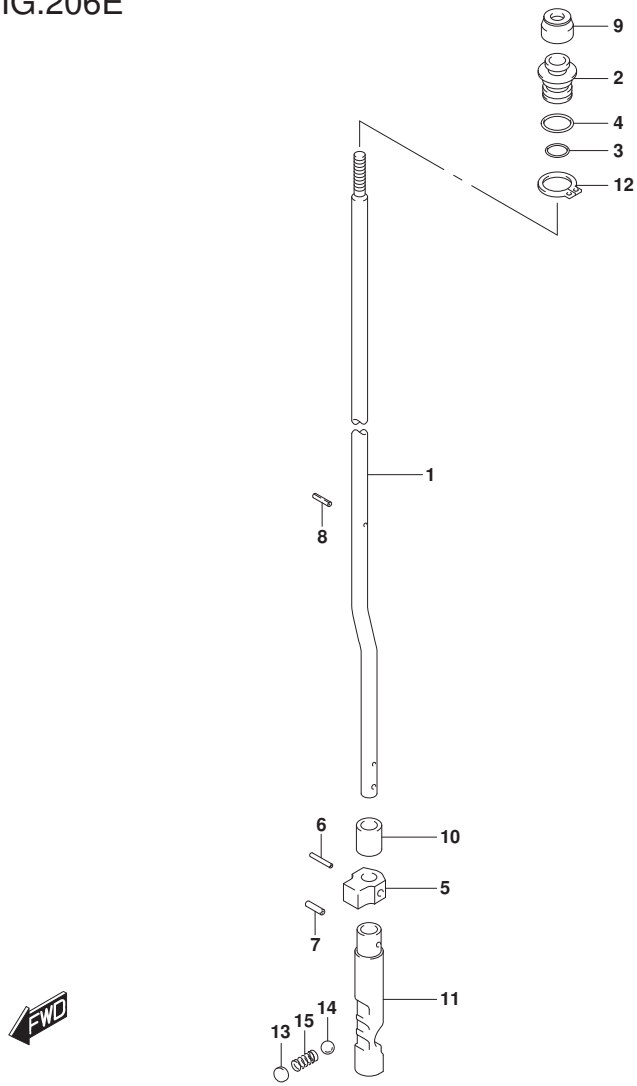

FIG.206E (1-F-2) CLUTCH ROD (DF60ATH E01)(DF60ATH E40)

REF NO.	PART NO.	DESCRIPTION	Q'TY	REMARKS
1-1	25111-88L10	ROD, SHIFT (L)	1	W/TRANSOM(L)
1-2	25111-88L20	ROD, SHIFT (X)	1	W/TRANSOM(X)
2	25211-87J00	GUIDE, SHIFT ROD	1	
3	09280-08005	O RING (D:1.7,ID:7.7)	1	
4	09280-11001	O RING (D:2.4,ID:10.8)	1	
5	25212-94401	GUIDE, SHIFT ROD LOWER	1	
6	09205-02013	SPRING PIN (2.5X16)	1	
7	09205-03021	SPRING PIN (3.5X12)	1	
8	09205-02004	SPRING PIN (2.5X12)	1	
9	25223-94400	SEAL, SHIFT ROD DUST	1	
10	25232-96302	MAGNET, GEAR CASE	1	
11	25311-88L00	CAM, SHIFT	1	
12	08331-3115A	CIRCLIP	1	
13	21121-93300	PLATE, DETENT SPRING	1	
14	09260-10005	BALL	1	
15	09440-07078	SPRING	1	

DF60ATH E01
DF60ATH E40

DF60A_E01_018_206E
CLUTCH ROD

FIG.210A

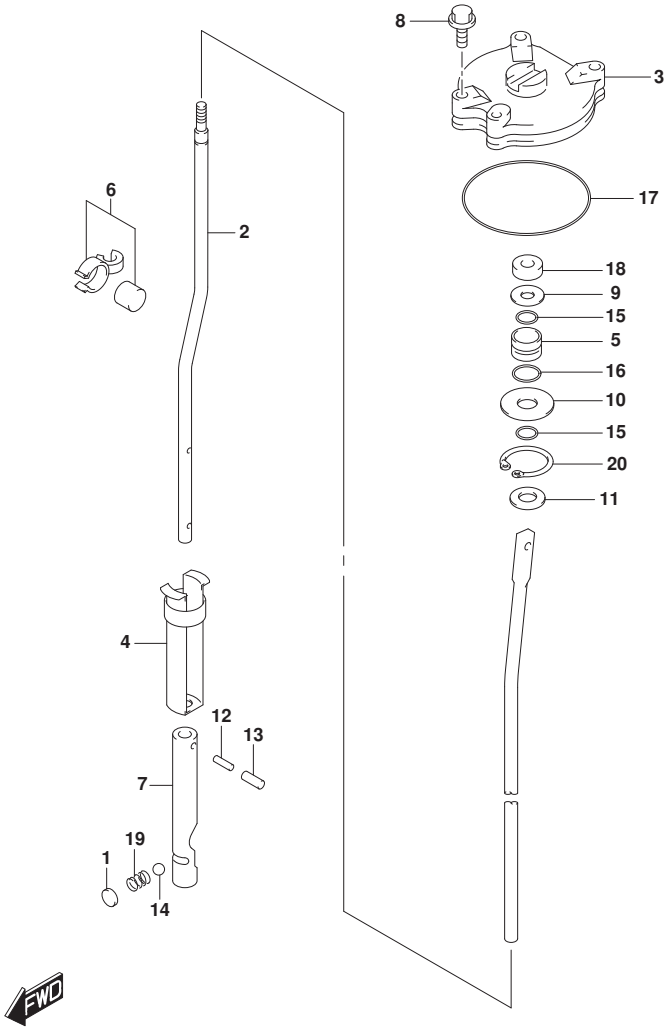

FIG.210A (1-F-3) SHIFT ROD (DF50AVT)(DF50AVTH)

REF NO.	PART NO.	DESCRIPTION	Q'TY	REMARKS
1	21121-93300	PLATE, CLUTCH NOTCH	1	
2	25111-88L30	ROD, SHIFT (L)	1	
3	25141-99E03	HOUSING, SHIFT ROD GUIDE	1	
4	25205-94501	COLLAR, SHIFT ROD SPRING	1	
5	25211-94501	GUIDE, SHIFT ROD	1	
6	25230-94300	MAGNET SET	1	
7	25311-94510	CAM, CLUTCH	1	
8	09117-06031	BOLT (6X20)	3	
9	09160-09015	WASHER (9X19X1.0)	1	
10	09160-09010	WASHER (9X30X1.6)	1	
11	09160-08122	WASHER (8.5X18X3.20)	1	
12	09205-02006	SPRING PIN (2X12)	2	
13	09205-03021	SPRING PIN (3.5X12)	2	
14	09260-10005	BALL	1	
15	09280-08008	O RING (D:3.5,ID:7.8)	2	
16	09280-15003	O RING (D:2.4,ID:14.8)	1	
17	09280-69001	O RING (D:3.1,ID:68.5)	1	
18	09284-08003	OIL SEAL (8X19X4.5)	1	
19	09440-07033	SPRING	1	
20	08331-41309	CIRCLIP	1	

DF50AVT E01
DF50AVTH E01

DF60A_E01_018_210A
SHIFT ROD

FIG.210B

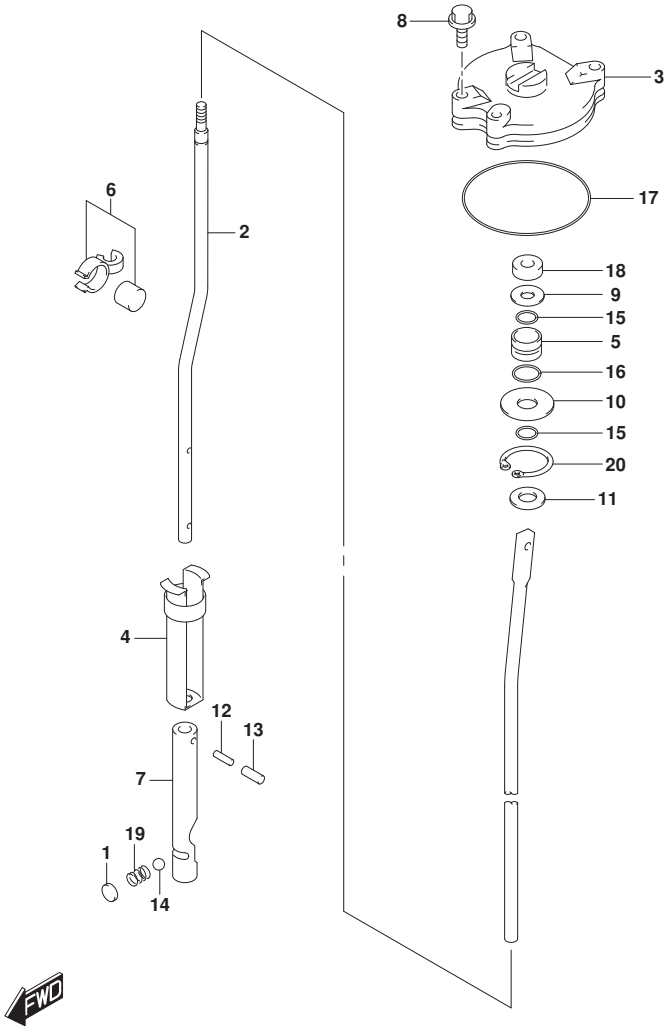

FIG.210B (1-F-4) SHIFT ROD (DF60AVT)(DF60AVTH)

REF NO.	PART NO.	DESCRIPTION	Q'TY	REMARKS
1	21121-93300	PLATE, CLUTCH NOTCH	1	
2-1	25111-88L30	ROD, SHIFT (L)	1	W/TRANSOM(L)
2-2	25111-88L40	ROD, SHIFT (X)	1	W/TRANSOM(X)
3	25141-99E03	HOUSING, SHIFT ROD GUIDE	1	
4	25205-94501	COLLAR, SHIFT ROD SPRING	1	
5	25211-94501	GUIDE, SHIFT ROD	1	
6	25230-94300	MAGNET SET	1	
7	25311-94510	CAM, CLUTCH	1	
8	09117-06031	BOLT (6X20)	3	
9	09160-09015	WASHER (9X19X1.0)	1	
10	09160-09010	WASHER (9X30X1.6)	1	
11	09160-08122	WASHER (8.5X18X3.20)	1	
12	09205-02006	SPRING PIN (2X12)	2	
13	09205-03021	SPRING PIN (3.5X12)	2	
14	09260-10005	BALL	1	
15	09280-08008	O RING (D:3.5,ID:7.8)	2	
16	09280-15003	O RING (D:2.4,ID:14.8)	1	
17	09280-69001	O RING (D:3.1,ID:68.5)	1	
18	09284-08003	OIL SEAL (8X19X4.5)	1	
19	09440-07033	SPRING	1	
20	08331-41309	CIRCLIP	1	

DF60AVT E01
DF60AVT E40
DF60AVTH E01
DF60AVTH E40

DF60A_E01_018_210B
SHIFT ROD

FIG.220A

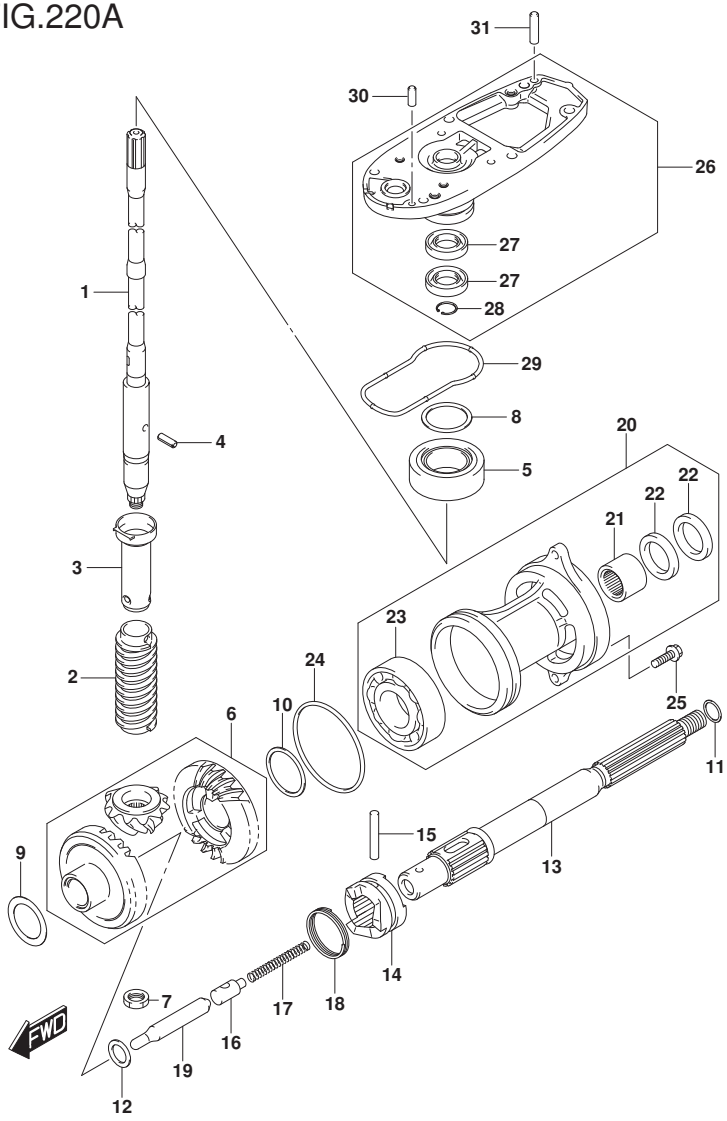

FIG.220A (1-F-5) TRANSMISSION (DF40A E01)(DF50A E01)

REF NO.	PART NO.	DESCRIPTION	Q'TY	REMARKS
1-1	57110-88L02	SHAFT ASSY, DRIVE (S)	1	W/TRANSOM(S)
1-2	57110-88L12	SHAFT ASSY, DRIVE (L)	1	W/TRANSOM(L)
2	57133-88L01	COLLAR, DRIVE SHAFT	1	
3	57133-94400	HOUSING, DRIVE SHAFT SPRING	1	
4	09205-03019	SPRING PIN (3X10)	1	
5	09265-20015	BEARING (20X42X15)	1	
6	57300-88810	PINION/GEAR SET	1	
7	09140-12034	NUT	1	
8-1	09181-35101	SHIM (T:0.50)	AR	DRIVE SHAFT ADJUST
8-2	09181-33001	SHIM (T:0.55)	AR	
8-3	09181-33002	SHIM (T:0.60)	AR	
8-4	09181-33003	SHIM (T:0.65)	AR	
8-5	09181-33004	SHIM (T:0.70)	AR	
8-6	09181-33005	SHIM (T:0.75)	AR	
8-7	09181-33006	SHIM (T:0.80)	AR	
8-8	09181-33007	SHIM (T:0.85)	AR	
8-9	09181-33008	SHIM (T:0.90)	AR	
8-10	09181-33009	SHIM (T:0.95)	AR	
8-11	09181-35110	SHIM (T:1.00)	AR	
9-1	09181-30186	SHIM (T:0.50)	AR	FORWARD BACKUP
9-2	09181-30187	SHIM (T:0.60)	AR	
9-3	09181-30188	SHIM (T:0.70)	AR	
9-4	09181-30190	SHIM (T:0.80)	AR	
9-5	09181-30192	SHIM (T:0.90)	AR	
10-1	08221-35455	SHIM	AR	REVERSE BACKUP
10-2	09181-35131	SHIM (T:0.60)	AR	
10-3	09181-35132	SHIM (T:0.70)	AR	
10-4	08221-35456	SHIM	AR	
10-5	09181-35136	SHIM (T:0.90)	AR	

FIG.220A

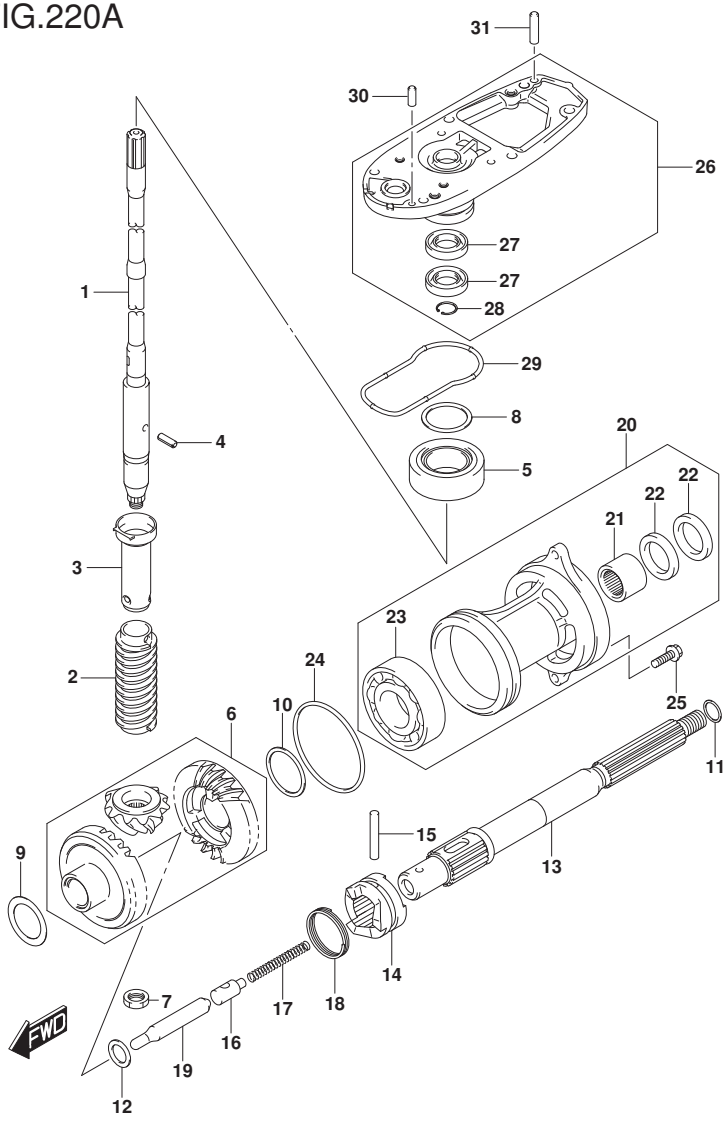

FIG.220A (1-F-6) TRANSMISSION (DF40A E01)(DF50A E01)

REF NO.	PART NO.	DESCRIPTION	Q'TY	REMARKS
10-6	08211-35451	WASHER	AR	
11-1	09160-22018	WASHER (22.2X28X1.8)	1	PROP SHAFT THRUST
11-2	09160-22019	WASHER (22.5X28X1.9)	1	
11-3	09160-22020	WASHER (22.5X28X2)	1	
11-4	09160-22021	WASHER (22.5X28X2.1)	1	
11-5	09160-22022	WASHER (22.5X28X2.2)	1	
11-6	09160-22023	WASHER (22.5X28X2.3)	1	
12	08211-20263	WASHER	1	
13	57610-94402	SHAFT, PROPELLER	1	
14	57621-87J03	SHIFTER, CLUTCH DOG	1	
15	09202-05022	PIN (5.5X38.5)	1	
16	57634-88L00	PIN, PUSH	1	
17	09440-08043	SPRING	1	
18	09440-40002	SPRING	1	
19	57631-95303	ROD, PUSH	1	
20-1	56120-94321-YAY	HOUSING, PROP SHAFT BEARING (BLACK)	1	
20-2	56120-94321-Y5S	HOUSING, PROP SHAFT BEARING (WHITE)	1	
21	09263-22020	.BEARING (22.2X28.5X19)	1	
22	09289-22007	.OIL SEAL (22X35X5)	2	
23	09262-35070	.BEARING (35X62X14)	1	
24	09280-75001	O RING (D:3.3,ID:75)	1	
25	09116-08122	BOLT (8X30)	2	

FIG.220A

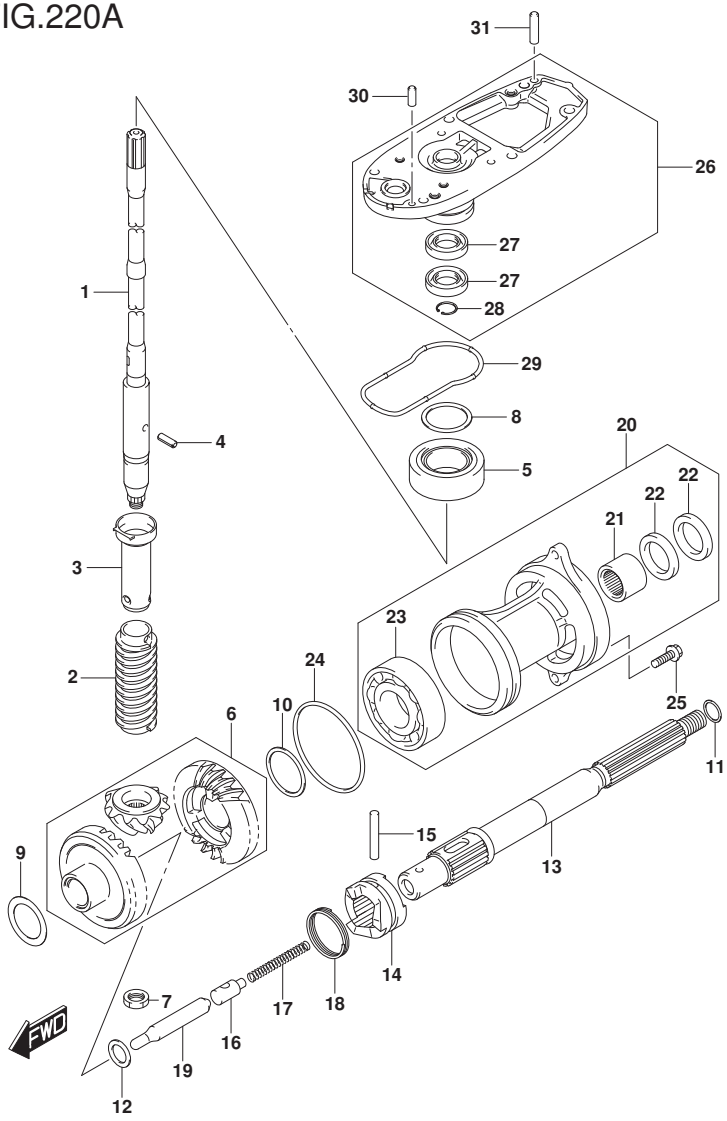

FIG.220A (1-F-7) TRANSMISSION (DF40A E01)(DF50A E01)

REF NO.	PART NO.	DESCRIPTION	Q'TY	REMARKS
26-1	56130-87J11-YAY	HOUSING, DRIVE SHAFT BEARING (BLACK)	1	
26-2	56130-87J11-Y5S	HOUSING, DRIVE SHAFT BEARING (WHITE)	1	
27	09282-17005	.OIL SEAL (17X32X6)	2	
28	08331-41329	.CIRCLIP	1	
29	55122-88L00	RING, GEAR CASE SEAL	1	
30	09202-06025	PIN (6X17)	1	
31	09202-06027	PIN (6X23)	1	

DF40A E01
DF50A E01

DF60A_E01_018_220A
TRANSMISSION

FIG.220B

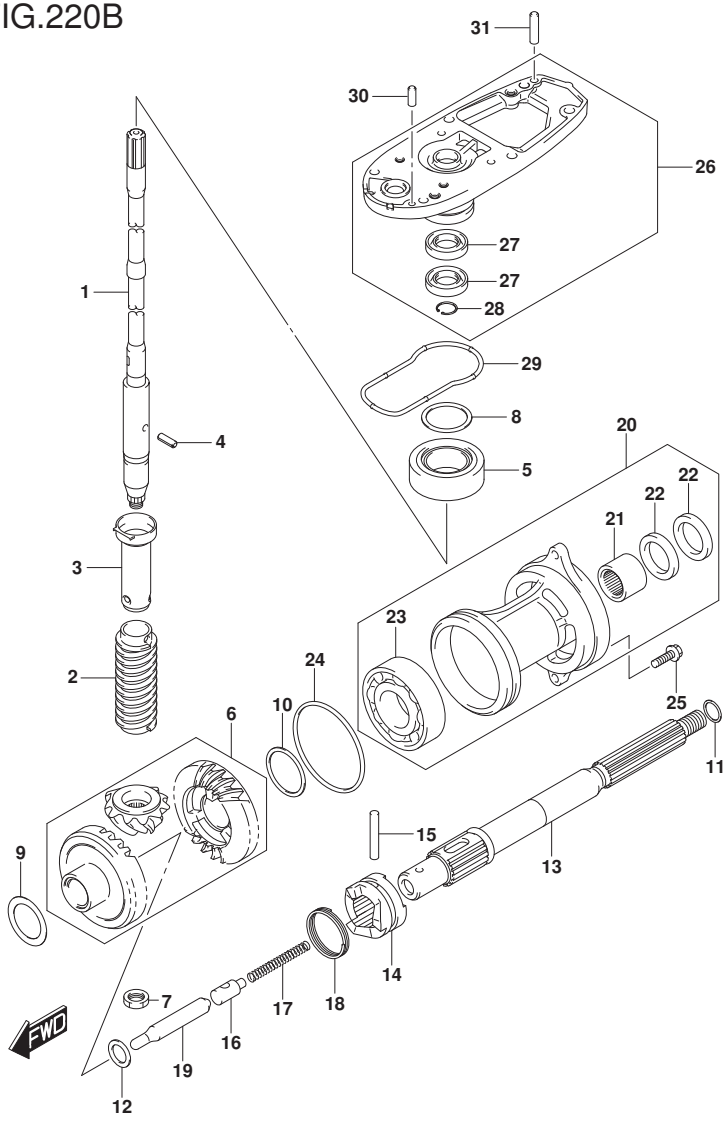

FIG.220B (1-F-8) TRANSMISSION (DF40AQH E01)(DF40ATH E01)(DF50ATH E01)

REF NO.	PART NO.	DESCRIPTION	Q'TY	REMARKS
1	57110-88L12	SHAFT ASSY, DRIVE (L)	1	
2	57133-88L01	COLLAR, DRIVE SHAFT	1	
3	57133-94400	HOUSING, DRIVE SHAFT SPRING	1	
4	09205-03019	SPRING PIN (3X10)	1	
5	09265-20015	BEARING (20X42X15)	1	
6	57300-88810	PINION/GEAR SET	1	
7	09140-12034	NUT	1	
8-1	09181-35101	SHIM (T:0.50)	AR	DRIVE SHAFT ADJUST
8-2	09181-33001	SHIM (T:0.55)	AR	
8-3	09181-33002	SHIM (T:0.60)	AR	
8-4	09181-33003	SHIM (T:0.65)	AR	
8-5	09181-33004	SHIM (T:0.70)	AR	
8-6	09181-33005	SHIM (T:0.75)	AR	
8-7	09181-33006	SHIM (T:0.80)	AR	
8-8	09181-33007	SHIM (T:0.85)	AR	
8-9	09181-33008	SHIM (T:0.90)	AR	
8-10	09181-33009	SHIM (T:0.95)	AR	
8-11	09181-35110	SHIM (T:1.00)	AR	
9-1	09181-30186	SHIM (T:0.50)	AR	FORWARD BACKUP
9-2	09181-30187	SHIM (T:0.60)	AR	
9-3	09181-30188	SHIM (T:0.70)	AR	
9-4	09181-30190	SHIM (T:0.80)	AR	
9-5	09181-30192	SHIM (T:0.90)	AR	
10-1	08221-35455	SHIM	AR	REVERSE BACKUP
10-2	09181-35131	SHIM (T:0.60)	AR	
10-3	09181-35132	SHIM (T:0.70)	AR	
10-4	08221-35456	SHIM	AR	
10-5	09181-35136	SHIM (T:0.90)	AR	

FIG.220B

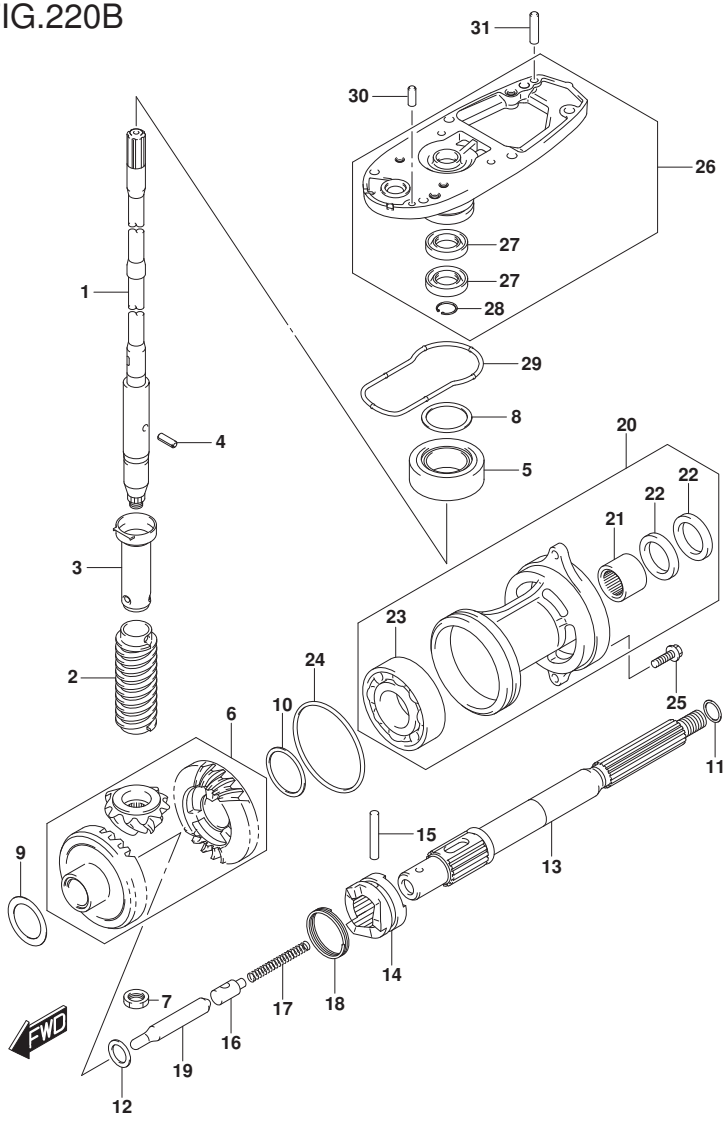

FIG.220B (1-F-9) TRANSMISSION (DF40AQH E01)(DF40ATH E01)(DF50ATH E01)

REF NO.	PART NO.	DESCRIPTION	Q'TY	REMARKS
10-6	08211-35451	WASHER	AR	
11-1	09160-22018	WASHER (22.2X28X1.8)	1	PROP SHAFT THRUST
11-2	09160-22019	WASHER (22.5X28X1.9)	1	
11-3	09160-22020	WASHER (22.5X28X2)	1	
11-4	09160-22021	WASHER (22.5X28X2.1)	1	
11-5	09160-22022	WASHER (22.5X28X2.2)	1	
11-6	09160-22023	WASHER (22.5X28X2.3)	1	
12	08211-20263	WASHER	1	
13	57610-94402	SHAFT, PROPELLER	1	
14	57621-87J03	SHIFTER, CLUTCH DOG	1	
15	09202-05022	PIN (5.5X38.5)	1	
16	57634-88L00	PIN, PUSH	1	
17	09440-08043	SPRING	1	
18	09440-40002	SPRING	1	
19	57631-95303	ROD, PUSH	1	
20	56120-94321-YAY	HOUSING, PROP SHAFT BEARING (BLACK)	1	
21	09263-22020	.BEARING (22.2X28.5X19)	1	
22	09289-22007	.OIL SEAL (22X35X5)	2	
23	09262-35070	.BEARING (35X62X14)	1	
24	09280-75001	O RING (D:3.3,ID:75)	1	
25	09116-08122	BOLT (8X30)	2	
26	56130-87J11-YAY	HOUSING, DRIVE SHAFT BEARING (BLACK)	1	
27	09282-17005	.OIL SEAL (17X32X6)	2	
28	08331-41329	.CIRCLIP	1	
29	55122-88L00	RING, GEAR CASE SEAL	1	
30	09202-06025	PIN (6X17)	1	
31	09202-06027	PIN (6X23)	1	

DF40AQH E01
DF40ATH E01
DF50ATH E01

FIG.220C

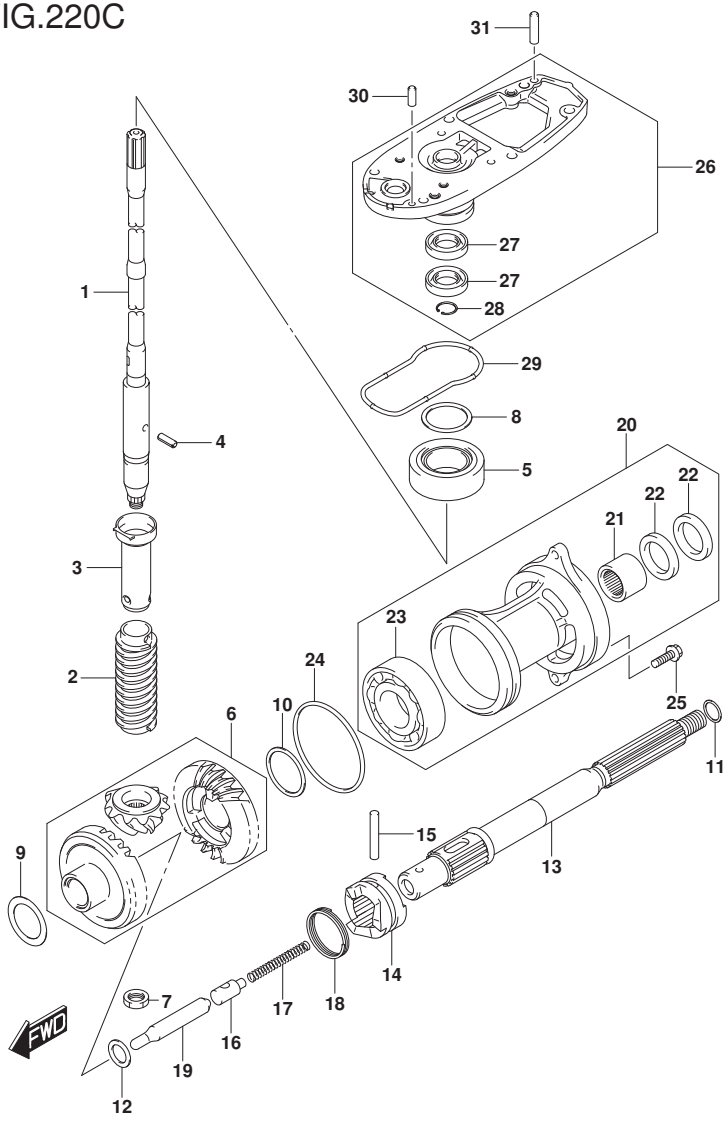

FIG.220C (1-F-10) TRANSMISSION (DF40AST E34)

REF NO.	PART NO.	DESCRIPTION	Q'TY	REMARKS
1-1	57110-88L02	SHAFT ASSY, DRIVE (S)	1	W/TRANSOM(S)
1-2	57110-88L12	SHAFT ASSY, DRIVE (L)	1	W/TRANSOM(L)
2	57133-88L01	COLLAR, DRIVE SHAFT	1	
3	57133-94400	HOUSING, DRIVE SHAFT SPRING	1	
4	09205-03019	SPRING PIN (3X10)	1	
5	09265-20015	BEARING (20X42X15)	1	
6	57300-88820	PINION/GEAR SET	1	
7	09140-12034	NUT	1	
8-1	09181-35101	SHIM (T:0.50)	AR	DRIVE SHAFT ADJUST
8-2	09181-33001	SHIM (T:0.55)	AR	
8-3	09181-33002	SHIM (T:0.60)	AR	
8-4	09181-33003	SHIM (T:0.65)	AR	
8-5	09181-33004	SHIM (T:0.70)	AR	
8-6	09181-33005	SHIM (T:0.75)	AR	
8-7	09181-33006	SHIM (T:0.80)	AR	
8-8	09181-33007	SHIM (T:0.85)	AR	
8-9	09181-33008	SHIM (T:0.90)	AR	
8-10	09181-33009	SHIM (T:0.95)	AR	
8-11	09181-35110	SHIM (T:1.00)	AR	
9-1	09181-30186	SHIM (T:0.50)	AR	FORWARD BACKUP
9-2	09181-30187	SHIM (T:0.60)	AR	
9-3	09181-30188	SHIM (T:0.70)	AR	
9-4	09181-30190	SHIM (T:0.80)	AR	
9-5	09181-30192	SHIM (T:0.90)	AR	
10-1	08221-35455	SHIM	AR	REVERSE BACKUP
10-2	09181-35131	SHIM (T:0.60)	AR	
10-3	09181-35132	SHIM (T:0.70)	AR	
10-4	08221-35456	SHIM	AR	
10-5	09181-35136	SHIM (T:0.90)	AR	
10-6	08211-35451	WASHER	AR	

FIG.220C

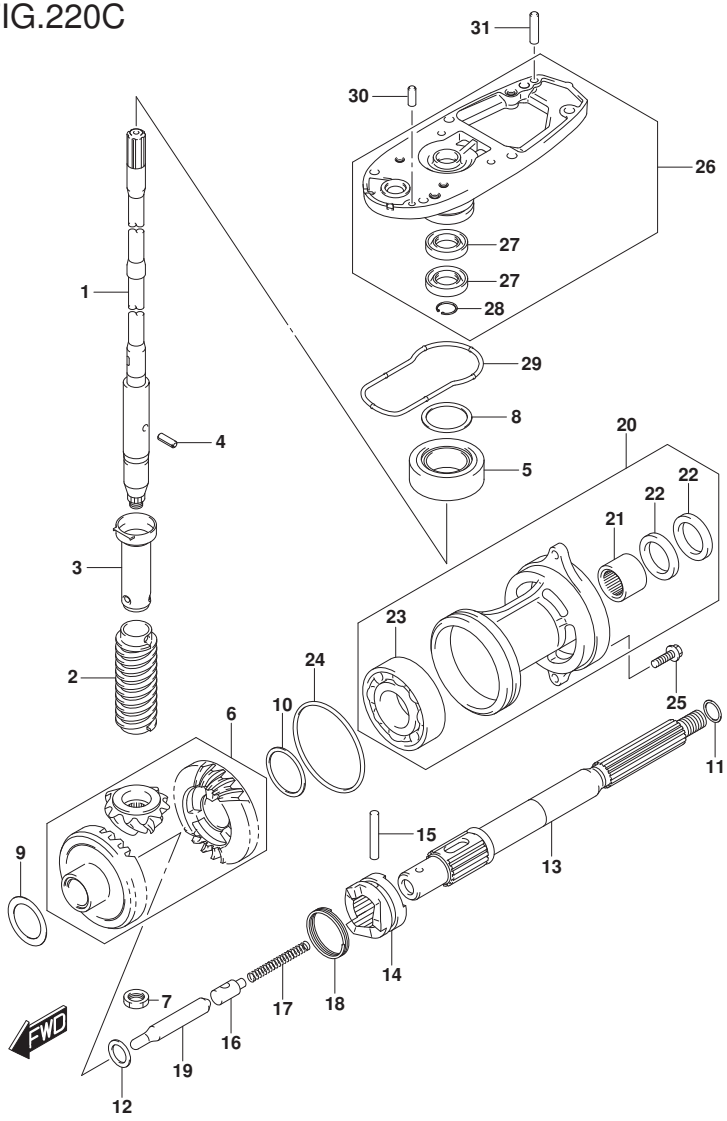

FIG.220C (1-F-11) TRANSMISSION (DF40AST E34)

REF NO.	PART NO.	DESCRIPTION	Q'TY	REMARKS
11-1	09160-22018	WASHER (22.2X28X1.8)	1	PROP SHAFT THRUST
11-2	09160-22019	WASHER (22.5X28X1.9)	1	
11-3	09160-22020	WASHER (22.5X28X2)	1	
11-4	09160-22021	WASHER (22.5X28X2.1)	1	
11-5	09160-22022	WASHER (22.5X28X2.2)	1	
11-6	09160-22023	WASHER (22.5X28X2.3)	1	
12	08211-20263	WASHER	1	
13	57610-94402	SHAFT, PROPELLER	1	
14	57621-87J03	SHIFTER, CLUTCH DOG	1	
15	09202-05022	PIN (5.5X38.5)	1	
16	57634-88L00	PIN, PUSH	1	
17	09440-08043	SPRING	1	
18	09440-40002	SPRING	1	
19	57631-95303	ROD, PUSH	1	
20-1	56120-94321-YAY	HOUSING, PROP SHAFT BEARING (BLACK)	1	
20-2	56120-94321-Y5S	HOUSING, PROP SHAFT BEARING (WHITE)	1	
21	09263-22020	.BEARING (22.2X28.5X19)	1	
22	09289-22007	.OIL SEAL (22X35X5)	2	
23	09262-35070	.BEARING (35X62X14)	1	
24	09280-75001	O RING (D:3.3,ID:75)	1	
25	09116-08122	BOLT (8X30)	2	
26-1	56130-87J11-YAY	HOUSING, DRIVE SHAFT BEARING (BLACK)	1	
26-2	56130-87J11-Y5S	HOUSING, DRIVE SHAFT BEARING (WHITE)	1	
27	09282-17005	.OIL SEAL (17X32X6)	2	
28	08331-41329	.CIRCLIP	1	
29	55122-88L00	RING, GEAR CASE SEAL	1	
30	09202-06025	PIN (6X17)	1	
31	09202-06027	PIN (6X23)	1	

DF40AST E34

FIG.220D

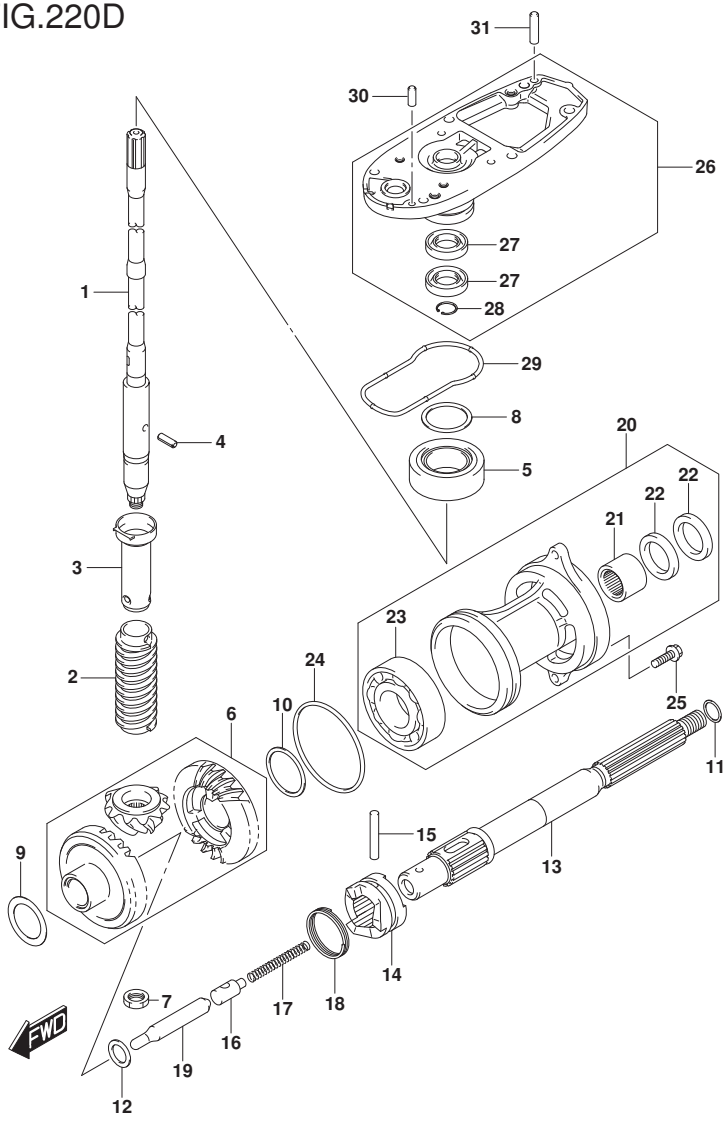

FIG.220D (1-F-12) TRANSMISSION (DF60A E01)

REF NO.	PART NO.	DESCRIPTION	Q'TY	REMARKS
1-1	57110-88L02	SHAFT ASSY, DRIVE (S)	1	W/TRANSOM(S)
1-2	57110-88L12	SHAFT ASSY, DRIVE (L)	1	W/TRANSOM(L)
1-3	57110-88L22	SHAFT ASSY, DRIVE (X)	1	W/TRANSOM(X)
2	57133-88L01	COLLAR, DRIVE SHAFT	1	
3	57133-94400	HOUSING, DRIVE SHAFT SPRING	1	
4	09205-03019	SPRING PIN (3X10)	1	
5	09265-20015	BEARING (20X42X15)	1	
6	57300-88810	PINION/GEAR SET	1	
7	09140-12034	NUT	1	
8-1	09181-35101	SHIM (T:0.50)	AR	DRIVE SHAFT ADJUST
8-2	09181-33001	SHIM (T:0.55)	AR	
8-3	09181-33002	SHIM (T:0.60)	AR	
8-4	09181-33003	SHIM (T:0.65)	AR	
8-5	09181-33004	SHIM (T:0.70)	AR	
8-6	09181-33005	SHIM (T:0.75)	AR	
8-7	09181-33006	SHIM (T:0.80)	AR	
8-8	09181-33007	SHIM (T:0.85)	AR	
8-9	09181-33008	SHIM (T:0.90)	AR	
8-10	09181-33009	SHIM (T:0.95)	AR	
8-11	09181-35110	SHIM (T:1.00)	AR	
9-1	09181-30186	SHIM (T:0.50)	AR	FORWARD BACKUP
9-2	09181-30187	SHIM (T:0.60)	AR	
9-3	09181-30188	SHIM (T:0.70)	AR	
9-4	09181-30190	SHIM (T:0.80)	AR	
9-5	09181-30192	SHIM (T:0.90)	AR	
10-1	08221-35455	SHIM	AR	REVERSE BACKUP
10-2	09181-35131	SHIM (T:0.60)	AR	
10-3	09181-35132	SHIM (T:0.70)	AR	
10-4	08221-35456	SHIM	AR	
10-5	09181-35136	SHIM (T:0.90)	AR	

FIG.220D

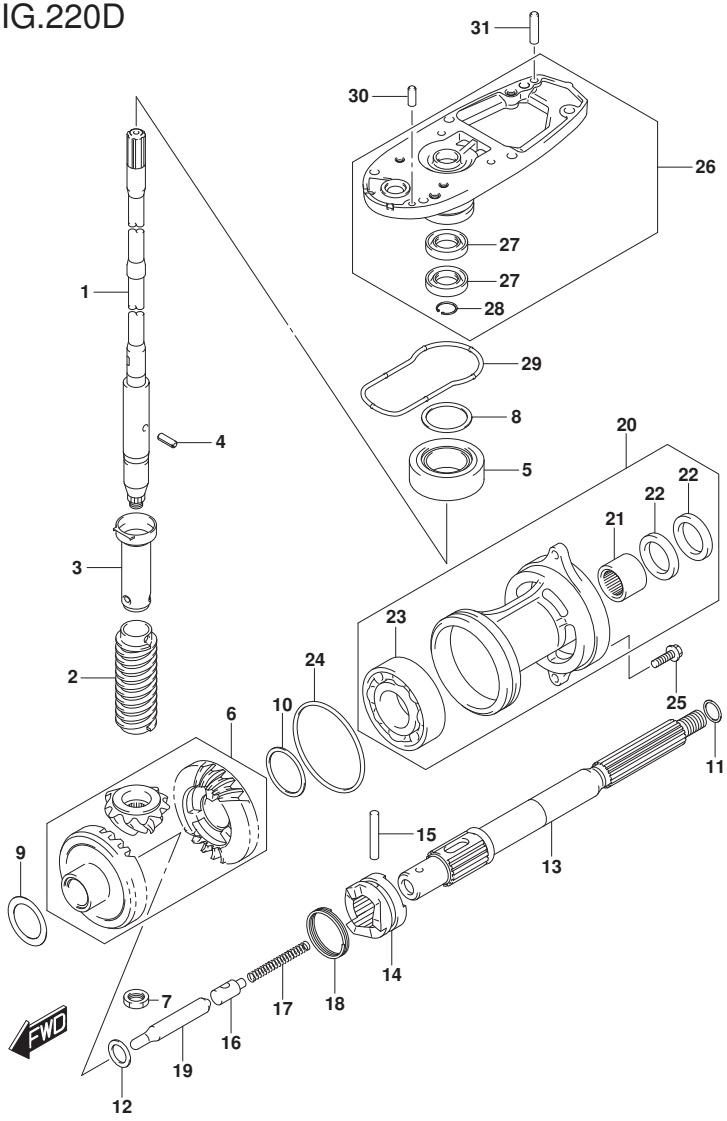

FIG.220D (1-F-13) TRANSMISSION (DF60A E01)

REF NO.	PART NO.	DESCRIPTION	Q'TY	REMARKS
10-6	08211-35451	WASHER	AR	
11-1	09160-22018	WASHER (22.2X28X1.8)	1	PROP SHAFT THRUST
11-2	09160-22019	WASHER (22.5X28X1.9)	1	
11-3	09160-22020	WASHER (22.5X28X2)	1	
11-4	09160-22021	WASHER (22.5X28X2.1)	1	
11-5	09160-22022	WASHER (22.5X28X2.2)	1	
11-6	09160-22023	WASHER (22.5X28X2.3)	1	
12	08211-20263	WASHER	1	
13	57610-94402	SHAFT, PROPELLER	1	
14	57621-87J03	SHIFTER, CLUTCH DOG	1	
15	09202-05022	PIN (5.5X38.5)	1	
16	57634-88L00	PIN, PUSH	1	
17	09440-08043	SPRING	1	
18	09440-40002	SPRING	1	
19	57631-95303	ROD, PUSH	1	
20-1	56120-94321-YAY	HOUSING, PROP SHAFT BEARING (BLACK)	1	
20-2	56120-94321-Y5S	HOUSING, PROP SHAFT BEARING (WHITE)	1	
21	09263-22020	.BEARING (22.2X28.5X19)	1	
22	09289-22007	.OIL SEAL (22X35X5)	2	
23	09262-35070	.BEARING (35X62X14)	1	
24	09280-75001	O RING (D:3.3,ID:75)	1	
25	09116-08122	BOLT (8X30)	2	

FIG.220D

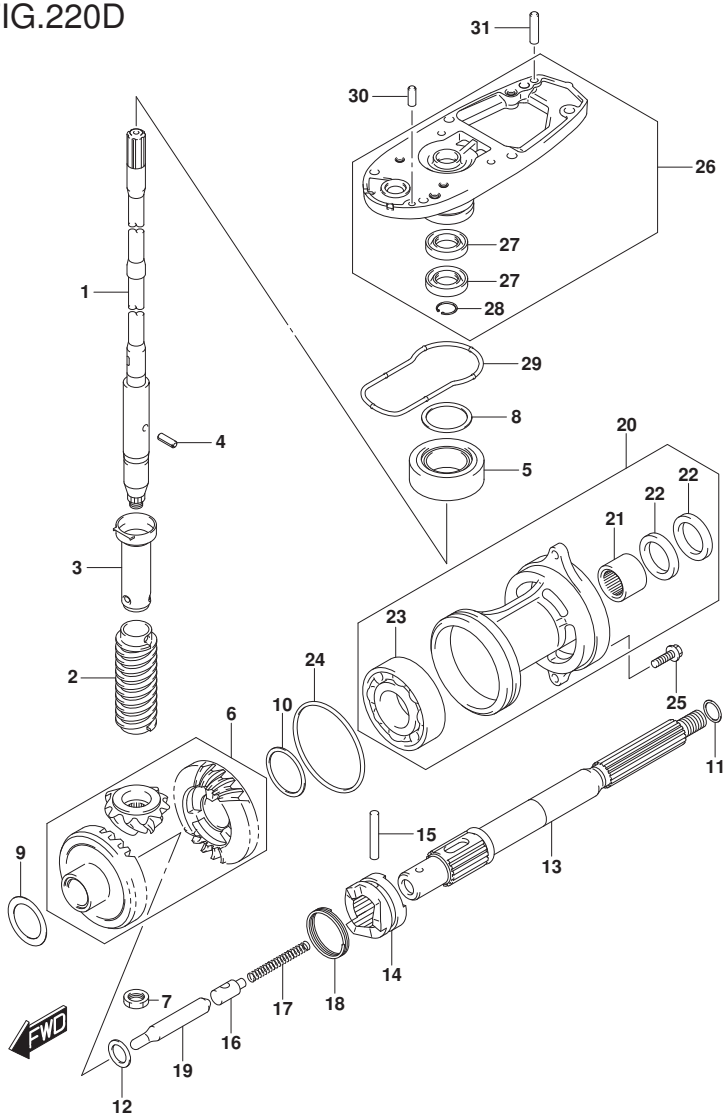

FIG.220D (1-F-14) TRANSMISSION (DF60A E01)

REF NO.	PART NO.	DESCRIPTION	Q'TY	REMARKS
26-1	56130-87J11-YAY	HOUSING, DRIVE SHAFT BEARING (BLACK)	1	
26-2	56130-87J11-Y5S	HOUSING, DRIVE SHAFT BEARING (WHITE)	1	
27	09282-17005	.OIL SEAL (17X32X6)	2	
28	08331-41329	.CIRCLIP	1	
29	55122-88L00	RING, GEAR CASE SEAL	1	
30	09202-06025	PIN (6X17)	1	
31	09202-06027	PIN (6X23)	1	

DF60A E01

FIG.220E

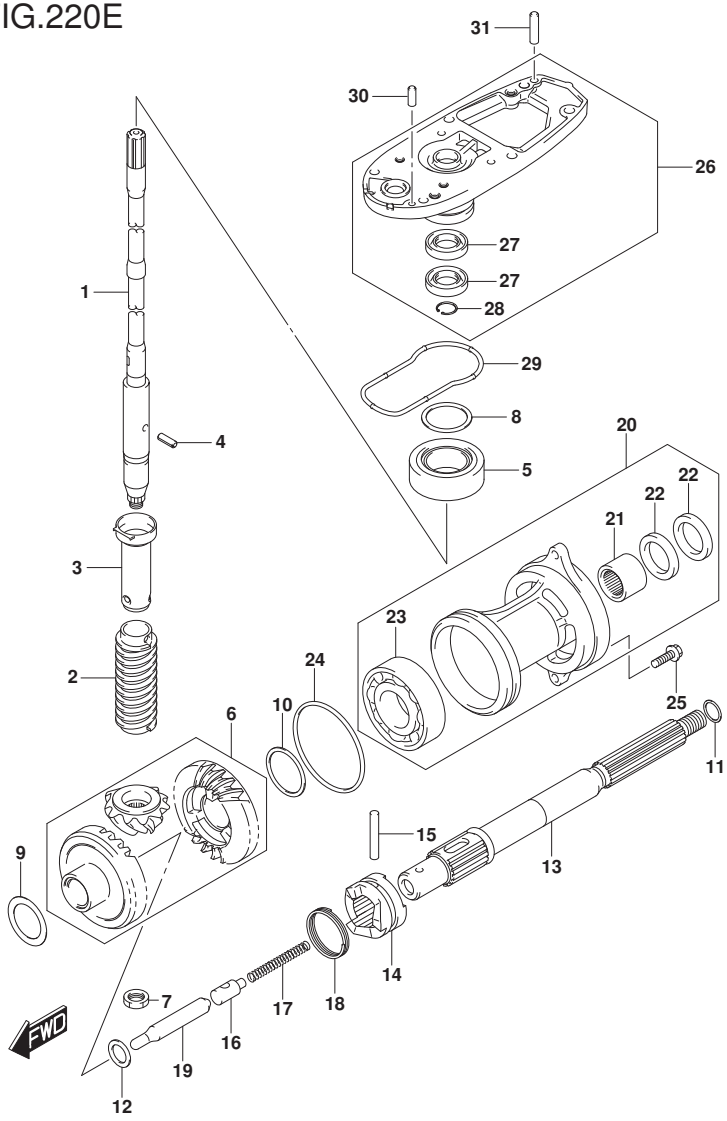

FIG.220E (1-F-15) TRANSMISSION (DF60AQH E01)(DF60AQH E40)(DF60ATH E01)(DF60A

REF NO.	PART NO.	DESCRIPTION	Q'TY	REMARKS
1-1	57110-88L12	SHAFT ASSY, DRIVE (L)	1	W/TRANSOM(L)
1-2	57110-88L22	SHAFT ASSY, DRIVE (X)	1	W/TRANSOM(X)
2	57133-88L01	COLLAR, DRIVE SHAFT	1	
3	57133-94400	HOUSING, DRIVE SHAFT SPRING	1	
4	09205-03019	SPRING PIN (3X10)	1	
5	09265-20015	BEARING (20X42X15)	1	
6	57300-88810	PINION/GEAR SET	1	
7	09140-12034	NUT	1	
8-1	09181-35101	SHIM (T:0.50)	AR	DRIVE SHAFT ADJUST
8-2	09181-33001	SHIM (T:0.55)	AR	
8-3	09181-33002	SHIM (T:0.60)	AR	
8-4	09181-33003	SHIM (T:0.65)	AR	
8-5	09181-33004	SHIM (T:0.70)	AR	
8-6	09181-33005	SHIM (T:0.75)	AR	
8-7	09181-33006	SHIM (T:0.80)	AR	
8-8	09181-33007	SHIM (T:0.85)	AR	
8-9	09181-33008	SHIM (T:0.90)	AR	
8-10	09181-33009	SHIM (T:0.95)	AR	
8-11	09181-35110	SHIM (T:1.00)	AR	
9-1	09181-30186	SHIM (T:0.50)	AR	FORWARD BACKUP
9-2	09181-30187	SHIM (T:0.60)	AR	
9-3	09181-30188	SHIM (T:0.70)	AR	
9-4	09181-30190	SHIM (T:0.80)	AR	
9-5	09181-30192	SHIM (T:0.90)	AR	
10-1	08221-35455	SHIM	AR	REVERSE BACKUP
10-2	09181-35131	SHIM (T:0.60)	AR	
10-3	09181-35132	SHIM (T:0.70)	AR	

FIG.220E

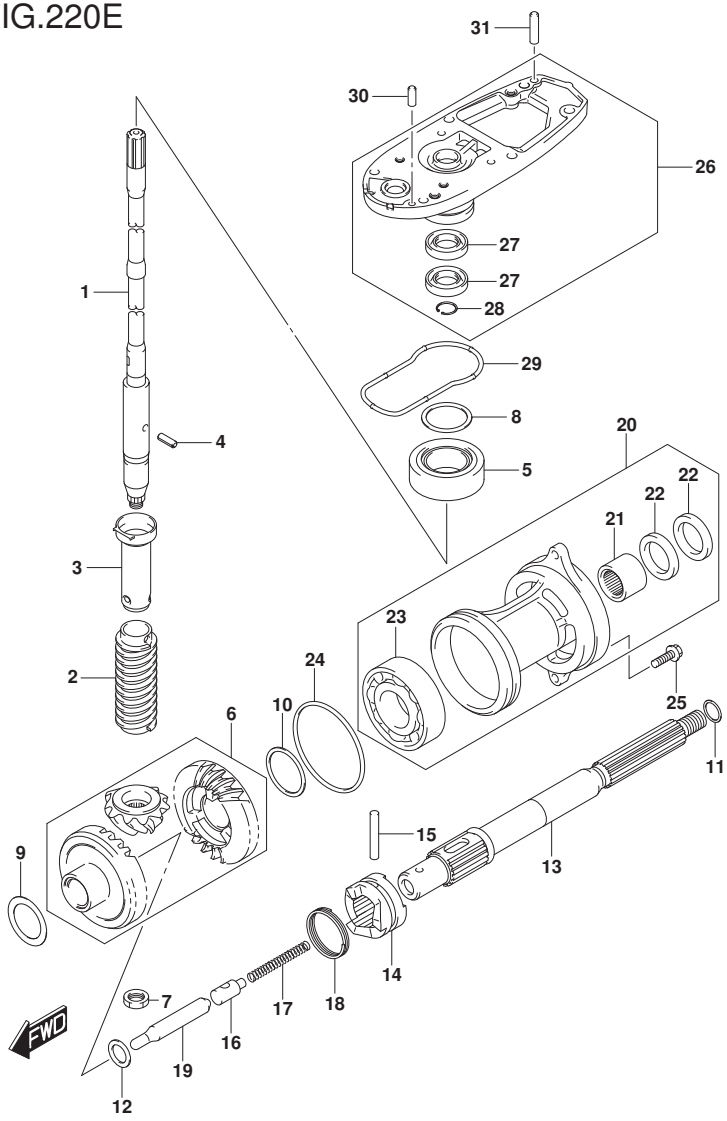

FIG.220E (1-G-2) TRANSMISSION (DF60AQH E01)(DF60AQH E40)(DF60ATH E01)(DF60A

REF NO.	PART NO.	DESCRIPTION	Q'TY	REMARKS
10-4	08221-35456	SHIM	AR	
10-5	09181-35136	SHIM (T:0.90)	AR	
10-6	08211-35451	WASHER	AR	
11-1	09160-22018	WASHER (22.2X28X1.8)	1	PROP SHAFT THRUST
11-2	09160-22019	WASHER (22.5X28X1.9)	1	
11-3	09160-22020	WASHER (22.5X28X2)	1	
11-4	09160-22021	WASHER (22.5X28X2.1)	1	
11-5	09160-22022	WASHER (22.5X28X2.2)	1	
11-6	09160-22023	WASHER (22.5X28X2.3)	1	
12	08211-20263	WASHER	1	
13	57610-94402	SHAFT, PROPELLER	1	
14	57621-87J03	SHIFTER, CLUTCH DOG	1	
15	09202-05022	PIN (5.5X38.5)	1	
16	57634-88L00	PIN, PUSH	1	
17	09440-08043	SPRING	1	
18	09440-40002	SPRING	1	
19	57631-95303	ROD, PUSH	1	
20	56120-94321-YAY	HOUSING, PROP SHAFT BEARING (BLACK)	1	
21	09263-22020	.BEARING (22.2X28.5X19)	1	
22	09289-22007	.OIL SEAL (22X35X5)	2	
23	09262-35070	.BEARING (35X62X14)	1	
24	09280-75001	O RING (D:3.3,ID:75)	1	
25	09116-08122	BOLT (8X30)	2	

DF60A_E01_018_220E
TRANSMISSION

FIG.220E

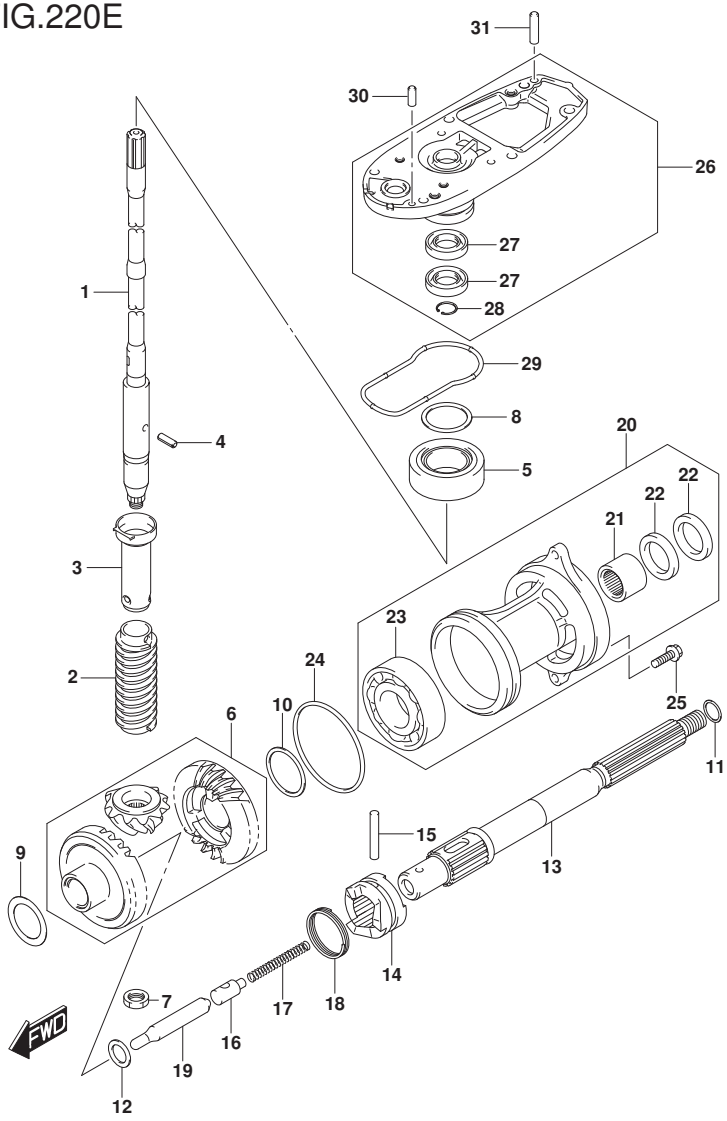

FIG.220E (1-G-3) TRANSMISSION (DF60AQH E01)(DF60AQH E40)(DF60ATH E01)(DF60A

REF NO.	PART NO.	DESCRIPTION	Q'TY	REMARKS
26	56130-87J11-YAY	HOUSING, DRIVE SHAFT BEARING (BLACK)	1	
27	09282-17005	.OIL SEAL (17X32X6)	2	
28	08331-41329	.CIRCLIP	1	
29	55122-88L00	RING, GEAR CASE SEAL	1	
30	09202-06025	PIN (6X17)	1	
31	09202-06027	PIN (6X23)	1	

DF60AQH E01
DF60AQH E40
DF60ATH E01
DF60ATH E40

FIG.220F

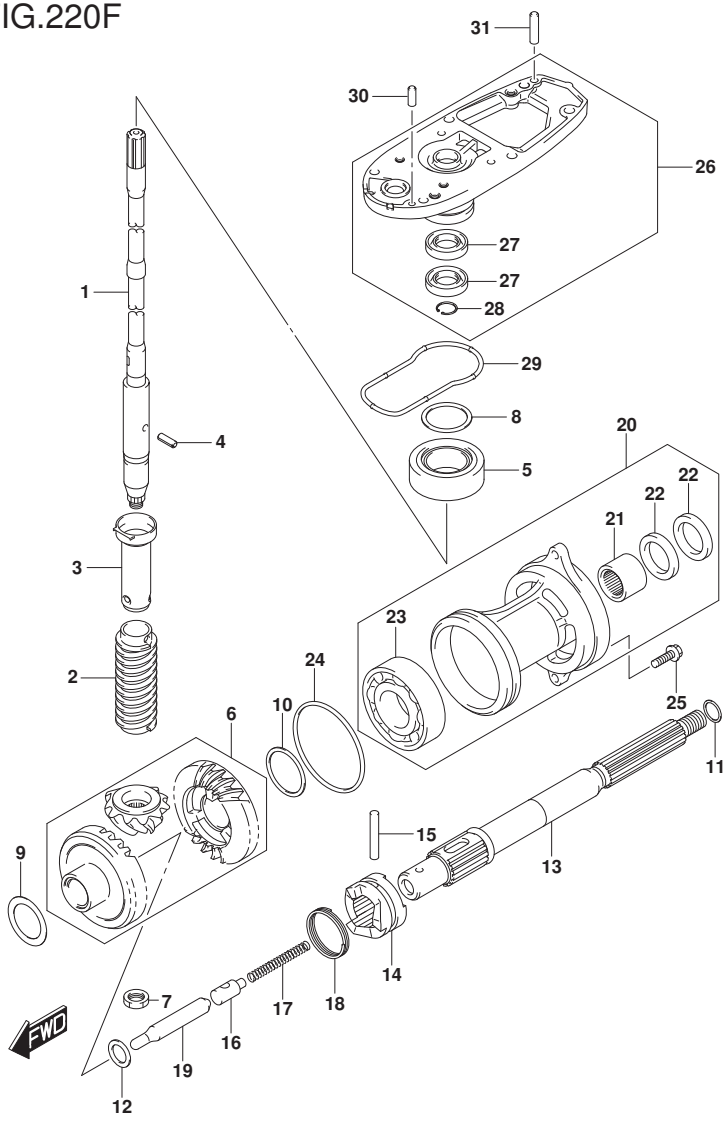

FIG.220F (1-G-4) TRANSMISSION (DF60A E40)

REF NO.	PART NO.	DESCRIPTION	Q'TY	REMARKS
1-1	57110-88L12	SHAFT ASSY, DRIVE (L)	1	W/TRANSOM(L)
1-2	57110-88L22	SHAFT ASSY, DRIVE (X)	1	W/TRANSOM(X)
2	57133-88L01	COLLAR, DRIVE SHAFT	1	
3	57133-94400	HOUSING, DRIVE SHAFT SPRING	1	
4	09205-03019	SPRING PIN (3X10)	1	
5	09265-20015	BEARING (20X42X15)	1	
6	57300-88810	PINION/GEAR SET	1	
7	09140-12034	NUT	1	
8-1	09181-35101	SHIM (T:0.50)	AR	DRIVE SHAFT ADJUST
8-2	09181-33001	SHIM (T:0.55)	AR	
8-3	09181-33002	SHIM (T:0.60)	AR	
8-4	09181-33003	SHIM (T:0.65)	AR	
8-5	09181-33004	SHIM (T:0.70)	AR	
8-6	09181-33005	SHIM (T:0.75)	AR	
8-7	09181-33006	SHIM (T:0.80)	AR	
8-8	09181-33007	SHIM (T:0.85)	AR	
8-9	09181-33008	SHIM (T:0.90)	AR	
8-10	09181-33009	SHIM (T:0.95)	AR	
8-11	09181-35110	SHIM (T:1.00)	AR	
9-1	09181-30186	SHIM (T:0.50)	AR	FORWARD BACKUP
9-2	09181-30187	SHIM (T:0.60)	AR	
9-3	09181-30188	SHIM (T:0.70)	AR	
9-4	09181-30190	SHIM (T:0.80)	AR	
9-5	09181-30192	SHIM (T:0.90)	AR	
10-1	08221-35455	SHIM	AR	REVERSE BACKUP
10-2	09181-35131	SHIM (T:0.60)	AR	
10-3	09181-35132	SHIM (T:0.70)	AR	
10-4	08221-35456	SHIM	AR	
10-5	09181-35136	SHIM (T:0.90)	AR	
10-6	08211-35451	WASHER	AR	

FIG.220F

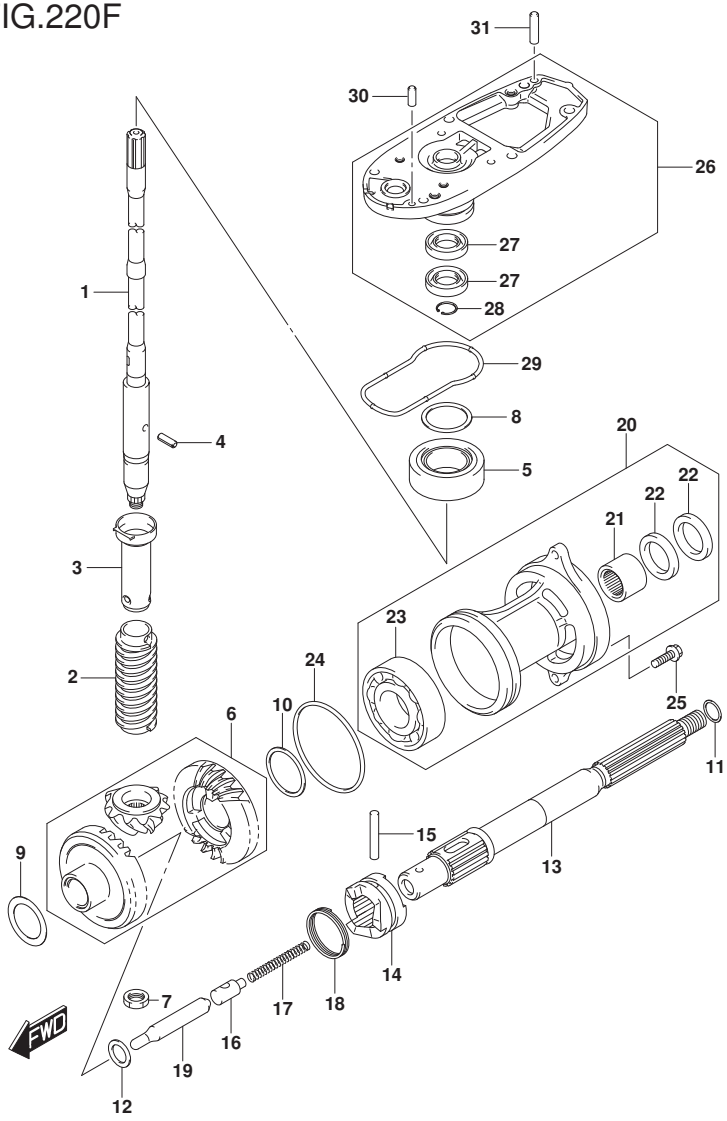

FIG.220F (1-G-5) TRANSMISSION (DF60A E40)

REF NO.	PART NO.	DESCRIPTION	Q'TY	REMARKS
11-1	09160-22018	WASHER (22.2X28X1.8)	1	PROP SHAFT THRUST
11-2	09160-22019	WASHER (22.5X28X1.9)	1	
11-3	09160-22020	WASHER (22.5X28X2)	1	
11-4	09160-22021	WASHER (22.5X28X2.1)	1	
11-5	09160-22022	WASHER (22.5X28X2.2)	1	
11-6	09160-22023	WASHER (22.5X28X2.3)	1	
12	08211-20263	WASHER	1	
13	57610-94402	SHAFT, PROPELLER	1	
14	57621-87J03	SHIFTER, CLUTCH DOG	1	
15	09202-05022	PIN (5.5X38.5)	1	
16	57634-88L00	PIN, PUSH	1	
17	09440-08043	SPRING	1	
18	09440-40002	SPRING	1	
19	57631-95303	ROD, PUSH	1	
20-1	56120-94321-YAY	HOUSING, PROP SHAFT BEARING (BLACK)	1	
20-2	56120-94321-Y5S	HOUSING, PROP SHAFT BEARING (WHITE)	1	
21	09263-22020	.BEARING (22.2X28.5X19)	1	
22	09289-22007	.OIL SEAL (22X35X5)	2	
23	09262-35070	.BEARING (35X62X14)	1	
24	09280-75001	O RING (D:3.3,ID:75)	1	
25	09116-08122	BOLT (8X30)	2	
26-1	56130-87J11-YAY	HOUSING, DRIVE SHAFT BEARING (BLACK)	1	
26-2	56130-87J11-Y5S	HOUSING, DRIVE SHAFT BEARING (WHITE)	1	
27	09282-17005	.OIL SEAL (17X32X6)	2	
28	08331-41329	.CIRCLIP	1	
29	55122-88L00	RING, GEAR CASE SEAL	1	
30	09202-06025	PIN (6X17)	1	
31	09202-06027	PIN (6X23)	1	

DF60A E40

FIG.220G

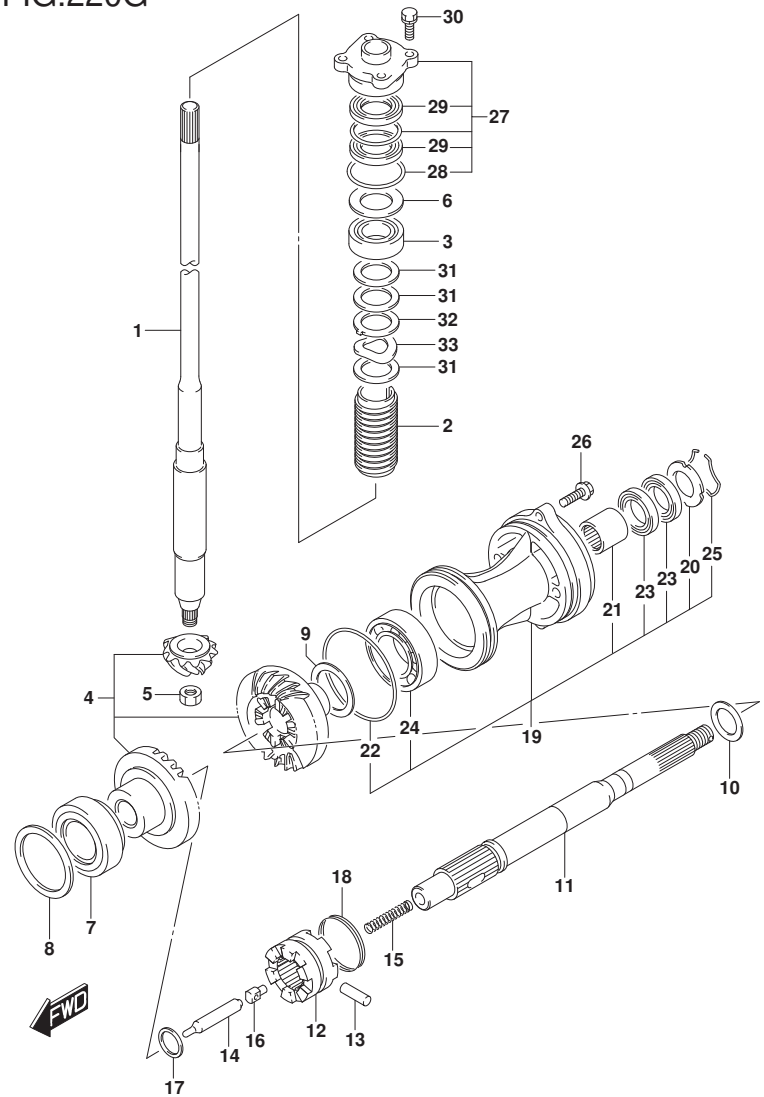

FIG.220G (1-G-6) TRANSMISSION (DF50AVT E01)(DF50AVTH E01)

REF NO.	PART NO.	DESCRIPTION	Q'TY	REMARKS
1	57110-88L30	SHAFT ASSY, DRIVE (L)	1	
2	57133-90J02	COLLAR, DRIVE SHAFT	1	
3	09265-25046	BEARING (25X52X19.25)	1	
4	57300-99824	PINION/GEAR SET	1	
5	09140-14024	NUT	1	
6-1	09181-40186	SHIM (T:0.50)	1	
6-2	09181-41002	SHIM (T:0.55)	1	
6-3	09181-41003	SHIM (T:0.60)	1	
6-4	09181-41004	SHIM (T:0.65)	1	
6-5	09181-41005	SHIM (T:0.70)	1	
6-6	09181-41006	SHIM (T:0.75)	1	
6-7	09181-40190	SHIM (T:0.80)	1	
6-8	09181-41008	SHIM (T:0.85)	1	
6-9	09181-41009	SHIM (T:0.90)	1	
6-10	09181-41010	SHIM (T:0.95)	1	
6-11	09181-40195	SHIM (T:1.00)	1	
6-12	09181-41012	SHIM (T:1.05)	1	
6-13	09181-41013	SHIM (T:1.10)	1	
6-14	09181-41014	SHIM (T:1.15)	1	
7	09265-50003	BEARING (50X85X26)	1	PART OF GEAR CASE
8-1	09181-50020	SHIM (T:0.45)	1	FORWARD GEAR
8-2	09181-50021	SHIM (T:0.50)	1	
8-3	09181-50022	SHIM (T:0.55)	1	
8-4	09181-50023	SHIM (T:0.60)	1	
8-5	09181-50024	SHIM (T:0.65)	1	
8-6	09181-50025	SHIM (T:0.70)	1	
8-7	09181-50026	SHIM (T:0.75)	1	
8-8	09181-50027	SHIM (T:0.80)	1	
8-9	09181-50028	SHIM (T:0.85)	1	

FIG.220G

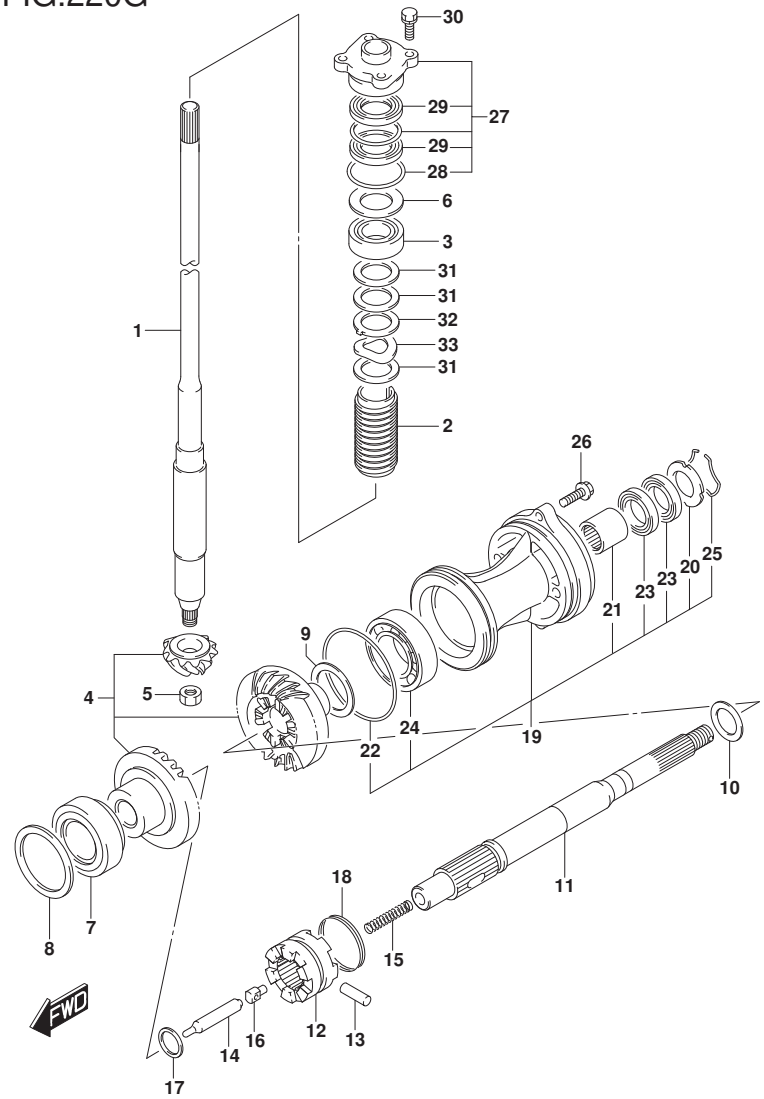

FIG.220G (1-G-7) TRANSMISSION (DF50AVT E01)(DF50AVTH E01)

REF NO.	PART NO.	DESCRIPTION	Q'TY	REMARKS
8-10	09181-50029	SHIM (T:0.90)	1	
9-1	09181-45003	SHIM (T:1.00)	1	REVERSE GEAR
9-2	09181-45004	SHIM (T:1.10)	1	
9-3	09181-45005	SHIM (T:1.20)	1	
9-4	09181-45006	SHIM (T:1.30)	1	
9-5	09181-45007	SHIM (T:1.40)	1	
9-6	09181-45008	SHIM (T:1.50)	1	
9-7	09181-45009	SHIM (T:1.60)	1	
10-1	09181-28015	SHIM (T:0.90)	1	PROP SHAFT REVERSE THRUST
10-2	09181-28016	SHIM (T:1.00)	1	
10-3	09181-28017	SHIM (T:1.20)	1	
10-4	09181-28018	SHIM (T:1.30)	1	
10-5	09181-28019	SHIM (T:1.40)	1	
10-6	09181-28020	SHIM (T:1.60)	1	
11	57610-88L10	SHAFT ASSY, PROPELLER	1	
12	57621-88L00	SHIFTER, CLUTCH DOG	1	
13	09202-07002	PIN (7X48)	1	
14	57631-99E01	ROD, PUSH	1	
15	09440-11020	SPRING	1	
16	09209-12007	PIN	1	
17	09181-25030	SHIM (25X32X3)	1	
18	09440-49004	SPRING	1	
19	56120-90J02-YAY	HOUSING, PROP SFT BRG (BLACK)	1	
20	56123-90J00	.WASHER, OIL SEAL PROTECTOR	1	
21	09263-28047	.BEARING (28X37X30)	1	
22	09280-97001	.O RING (D:3.5,ID:95)	1	
23	09282-28002	.OIL SEAL (28X50X6)	2	
24	08113-62090	.BEARING	1	
25	09387-52001	.RING SET	1	

FIG.220G

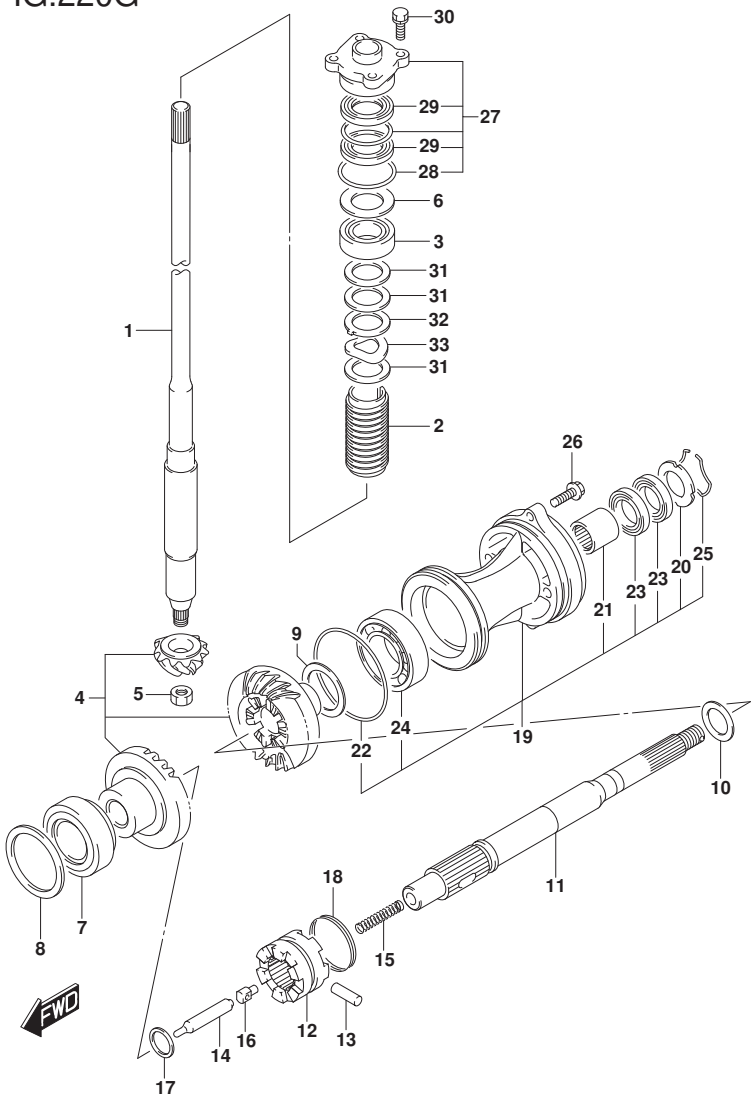

FIG.220G (1-G-8) TRANSMISSION (DF50AVT E01)(DF50AVTH E01)

REF NO.	PART NO.	DESCRIPTION	Q'TY	REMARKS
26	09116-08122	BOLT (8X30)	2	
27	56130-87E00	HOUSING	1	
28	09280-46004	.O RING (D:3.5,ID:45.7)	1	
29	09282-22007	.OIL SEAL (22X36X6)	2	
30	09117-08110	BOLT (8X25)	4	
31	09181-31001	SHIM (31X46X2)	3	
32	09169-31001	WASHER	1	
33	09164-31001	WASHER	1	

DF50AVT E01
DF50AVTH E01

FIG.220H

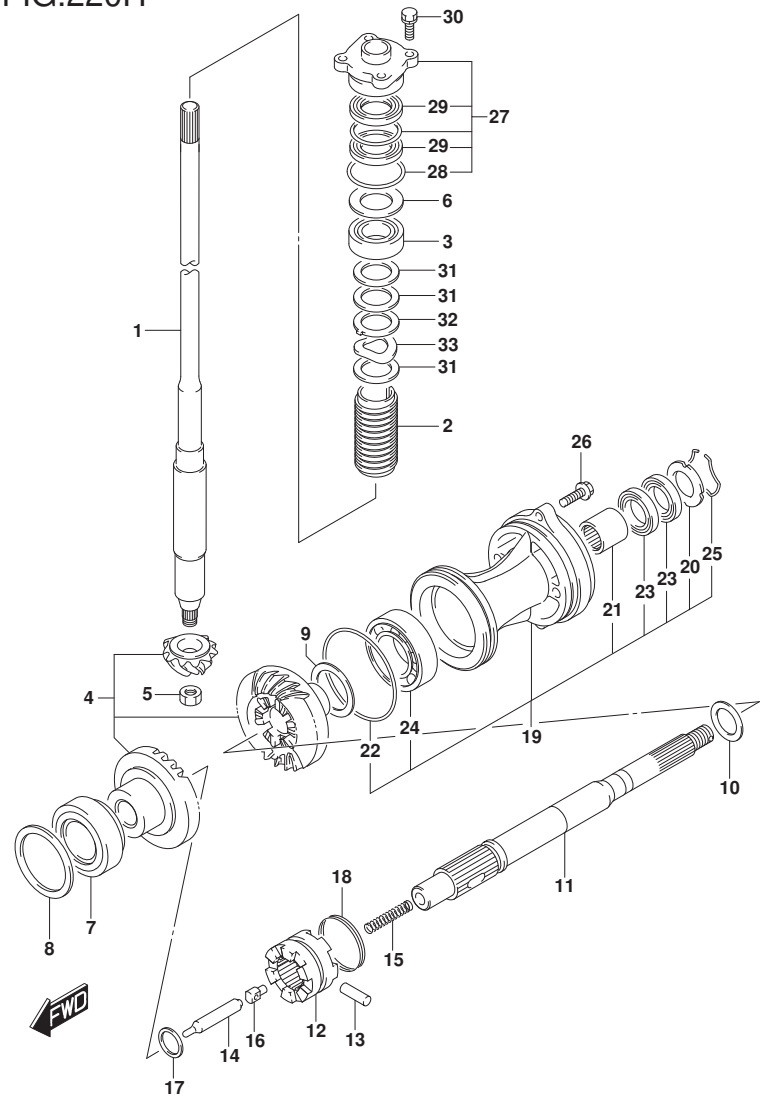

FIG.220H (1-G-9) TRANSMISSION (DF60AVT E01)(DF60AVT E40)(DF60AVTH E01)(DF60A

REF NO.	PART NO.	DESCRIPTION	Q'TY	REMARKS
1-1	57110-88L30	SHAFT ASSY, DRIVE (L)	1	W/TRANSOM(L)
1-2	57110-88L40	SHAFT ASSY, DRIVE (X)	1	W/TRANSOM(X)
2	57133-90J02	COLLAR, DRIVE SHAFT	1	
3	09265-25046	BEARING (25X52X19.25)	1	
4	57300-99824	PINION/GEAR SET	1	
5	09140-14024	NUT	1	
6-1	09181-40186	SHIM (T:0.50)	1	
6-2	09181-41002	SHIM (T:0.55)	1	
6-3	09181-41003	SHIM (T:0.60)	1	
6-4	09181-41004	SHIM (T:0.65)	1	
6-5	09181-41005	SHIM (T:0.70)	1	
6-6	09181-41006	SHIM (T:0.75)	1	
6-7	09181-40190	SHIM (T:0.80)	1	
6-8	09181-41008	SHIM (T:0.85)	1	
6-9	09181-41009	SHIM (T:0.90)	1	
6-10	09181-41010	SHIM (T:0.95)	1	
6-11	09181-40195	SHIM (T:1.00)	1	
6-12	09181-41012	SHIM (T:1.05)	1	
6-13	09181-41013	SHIM (T:1.10)	1	
6-14	09181-41014	SHIM (T:1.15)	1	
7	09265-50003	BEARING (50X85X26)	1	PART OF GEAR CASE
8-1	09181-50020	SHIM (T:0.45)	1	FORWARD GEAR
8-2	09181-50021	SHIM (T:0.50)	1	
8-3	09181-50022	SHIM (T:0.55)	1	
8-4	09181-50023	SHIM (T:0.60)	1	
8-5	09181-50024	SHIM (T:0.65)	1	
8-6	09181-50025	SHIM (T:0.70)	1	

FIG.220H

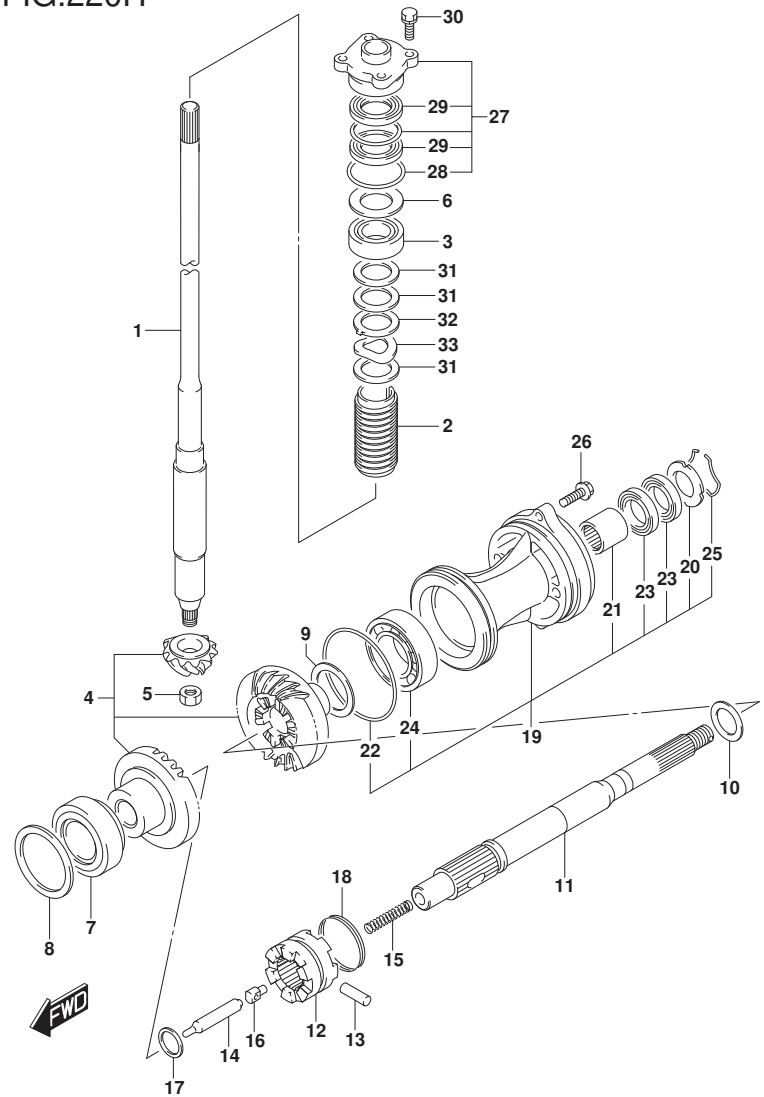

FIG.220H (1-G-10) TRANSMISSION (DF60AVT E01)(DF60AVT E40)(DF60AVTH E01)(DF60

REF NO.	PART NO.	DESCRIPTION	Q'TY	REMARKS
8-7	09181-50026	SHIM (T:0.75)	1	
8-8	09181-50027	SHIM (T:0.80)	1	
8-9	09181-50028	SHIM (T:0.85)	1	
8-10	09181-50029	SHIM (T:0.90)	1	
9-1	09181-45003	SHIM (T:1.00)	1	REVERSE GEAR
9-2	09181-45004	SHIM (T:1.10)	1	
9-3	09181-45005	SHIM (T:1.20)	1	
9-4	09181-45006	SHIM (T:1.30)	1	
9-5	09181-45007	SHIM (T:1.40)	1	
9-6	09181-45008	SHIM (T:1.50)	1	
9-7	09181-45009	SHIM (T:1.60)	1	
10-1	09181-28015	SHIM (T:0.90)	1	PROP SHAFT REVERSE THRUST
10-2	09181-28016	SHIM (T:1.00)	1	
10-3	09181-28017	SHIM (T:1.20)	1	
10-4	09181-28018	SHIM (T:1.30)	1	
10-5	09181-28019	SHIM (T:1.40)	1	
10-6	09181-28020	SHIM (T:1.60)	1	
11	57610-88L10	SHAFT ASSY, PROPELLER	1	
12	57621-88L00	SHIFTER, CLUTCH DOG	1	
13	09202-07002	PIN (7X48)	1	
14	57631-99E01	ROD, PUSH	1	
15	09440-11020	SPRING	1	
16	09209-12007	PIN	1	
17	09181-25030	SHIM (25X32X3)	1	
18	09440-49004	SPRING	1	

FIG.220H

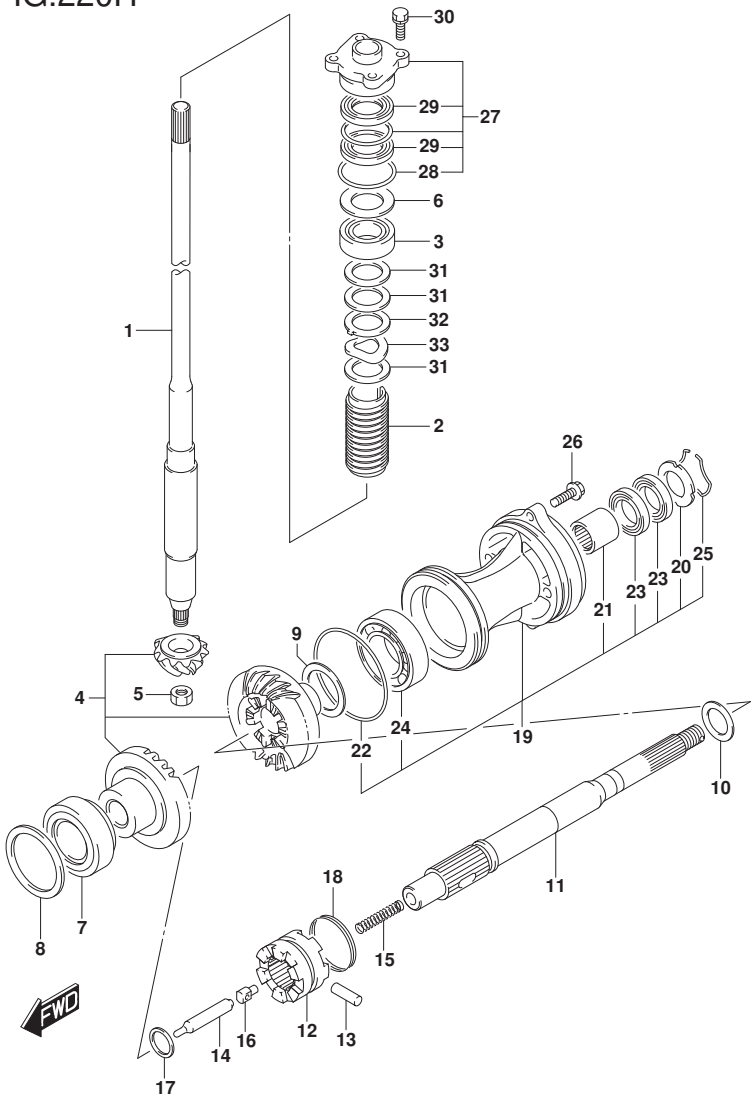

FIG.220H (1-G-11) TRANSMISSION (DF60AVT E01)(DF60AVT E40)(DF60AVTH E01)(DF60

REF NO.	PART NO.	DESCRIPTION	Q'TY	REMARKS
19	56120-90J02-YAY	HOUSING, PROP SFT BRG (BLACK)	1	
20	56123-90J00	.WASHER, OIL SEAL PROTECTOR	1	
21	09263-28047	.BEARING (28X37X30)	1	
22	09280-97001	.O RING (D:3.5,ID:95)	1	
23	09282-28002	.OIL SEAL (28X50X6)	2	
24	08113-62090	.BEARING	1	
25	09387-52001	.RING SET	1	
26	09116-08122	BOLT (8X30)	2	
27	56130-87E00	HOUSING	1	
28	09280-46004	.O RING (D:3.5,ID:45.7)	1	
29	09282-22007	.OIL SEAL (22X36X6)	2	
30	09117-08110	BOLT (8X25)	4	
31	09181-31001	SHIM (31X46X2)	3	
32	09169-31001	WASHER	1	
33	09164-31001	WASHER	1	

DF60AVT E01
DF60AVT E40
DF60AVTH E01
DF60AVTH E40

FIG.301A

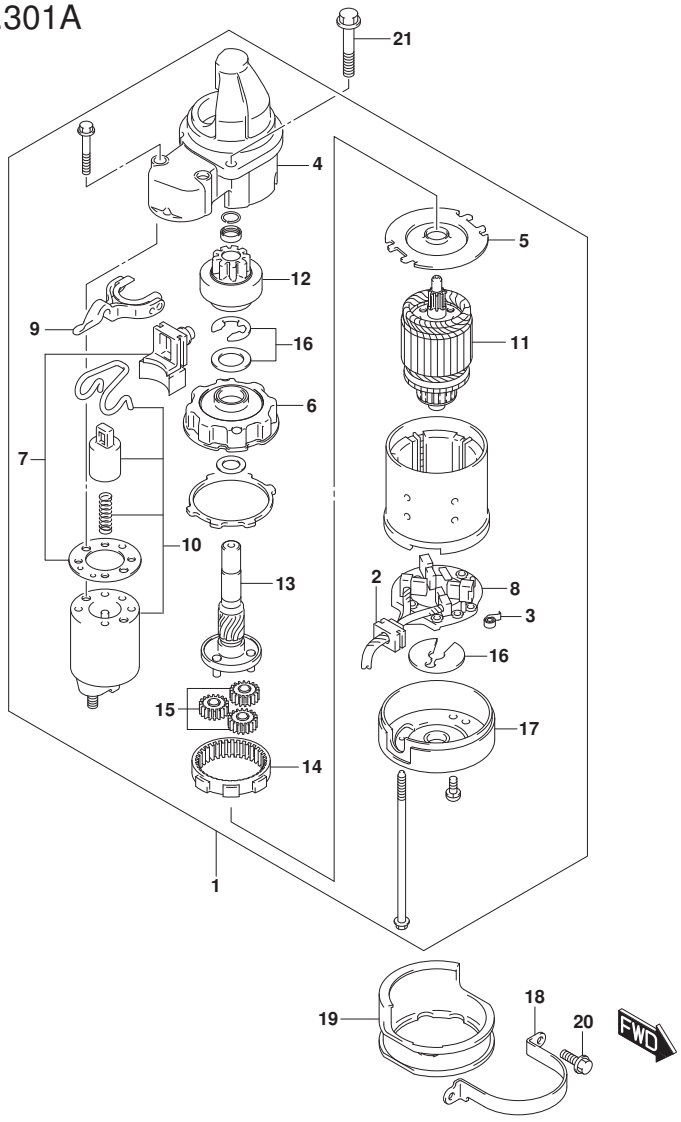

FIG.301A (1-G-12) STARTING MOTOR

REF NO.	PART NO.	DESCRIPTION	Q'TY	REMARKS
1	31100-94J22	STARTING MOTOR	1	
2	31131-94J00	.BRUSH SET, PLUS	1	
3	31135-90J00	.SPRING	4	
4	31151-94J01	.CASE, GEAR	1	
5	31152-90J00	.PLATE, CENTER	1	
6	31153-90J00	.BRACKET, PLANET GEAR	1	
7	31171-96J00	.COVER KIT, DUST	1	
8	31173-94J01	.HOLDER ASSY, BRUSH	1	
9	31191-96J00	.LEVER, SHIFT	1	
10	31220-94J00	.SWITCH, MAGNET	1	
11	31310-90J00	.ARMATURE	1	
12	31320-94J00	.PINION	1	
13	31341-94J00	.SHAFT, PINION	1	
14	31343-90J00	.INTERNAL GEAR	1	
15	31344-90J00	.GEAR, PLANETARY	3	
16	31360-93J01	.WASHER SET	1	
17	31170-94J00	.COVER ASSY, STARTER MOTER REAR	1	
18	31912-88L00	BAND, STARTER MOTOR	1	
19	31918-87L00	DAMPER, LOWER	1	
20	01550-06167	BOLT	2	LOWER
21	01550-0830C	BOLT	2	UPPER

DF60A_E01_018_301A
STARTING MOTOR

FIG.303A

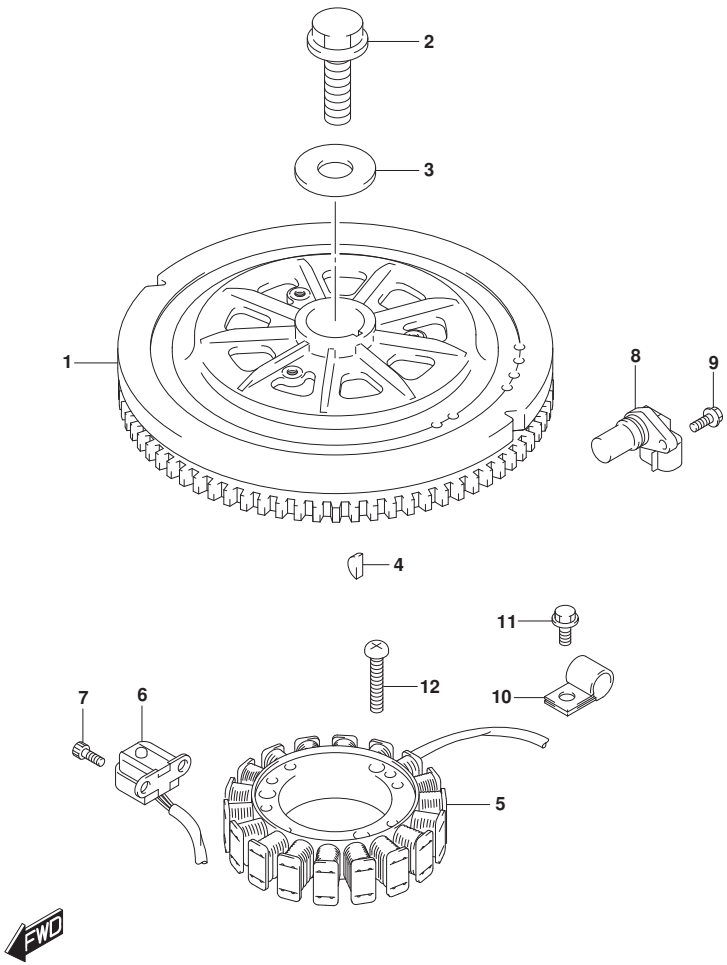

FIG.303A (1-G-13) MAGNETO

REF NO.	PART NO.	DESCRIPTION	Q'TY	REMARKS
1	32102-88L01	FLYWHEEL	1	
2	09103-14024	BOLT (14X50)	1	
3	09160-14065	WASHER (14.5X36X4.5)	1	
4	09420-04008	KEY	1	
5	32120-88L00	COIL, BATTERY CHARGING	1	
6	32160-88L00	COIL, IGNITION TIMING	1	
7	09106-05030	BOLT (5X10)	2	
8	33220-64L10	SENSOR ASSY, CAM POSITION	1	
9	01550-0616C	BOLT	1	
10	09403-13408	CLAMP	1	
11	01550-06127	BOLT	1	
12	02112-06307	SCREW	3	

DF60A_E01_018_303A
MAGNETO

FIG.310A

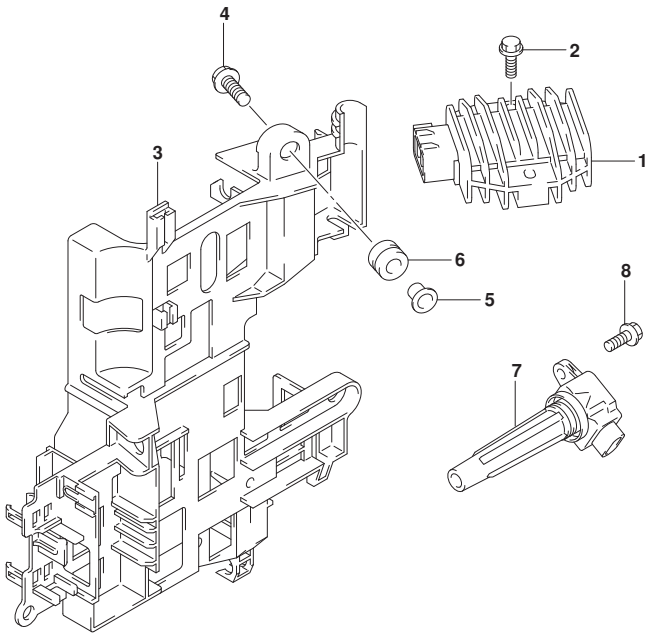

FIG.310A (1-G-14) RECTIFIER/IGNITION COIL

REF NO.	PART NO.	DESCRIPTION	Q'TY	REMARKS
1	32800-88L01	RECTIFIER/REGULATOR ASSY	1	
2	01550-0625C	BOLT	2	
3	32890-88L00	HOLDER, ELECTRIC PARTS	1	
4	09116-06202	BOLT (6X25)	3	
5	09169-06062	WASHER	3	
6	09320-09016	CUSHION	3	
7	33410-87L00	COIL ASSY, IGNITION	3	
8	01550-0620C	BOLT	3	

DF60A_E01_018_310A
RECTIFIER/IGNITION COIL

FIG.315A

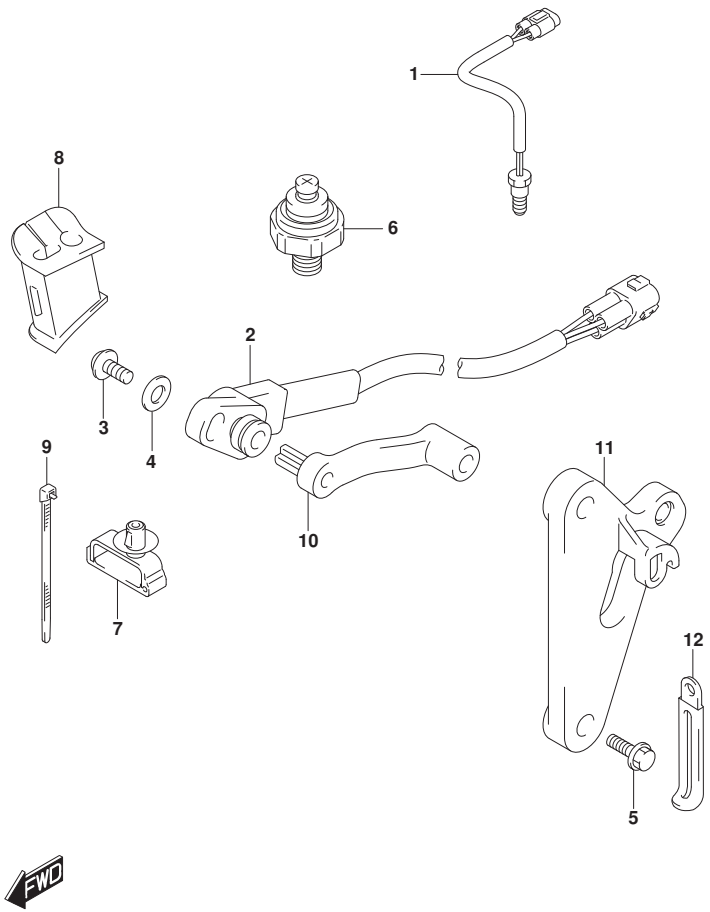

FIG.315A (1-G-15) SENSOR (DF40A)(DF40ATH)(DF50A)(DF50ATH)

REF NO.	PART NO.	DESCRIPTION	Q'TY	REMARKS
1	34830-87J20	SENSOR ASSY, CYLINDER TEMP	1	
2	34840-98J03	SENSOR ASSY, TRIM	1	
3	09125-05048	SCREW (5X16)	1	
4	09160-05029	WASHER (5.5X12X0.8)	1	
5	09103-06093	BOLT (6X20)	2	
6	37820-99E02	SWITCH, OIL PRESSURE	1	
7	09403-07340	CLAMP	1	
8	36656-88L00	GROMMET, PTT CABLE	1	
9	09407-14407	CLAMP (L:145)	3	
10	34841-88L00	LEVER, TRIM SENSOR	1	
11	34845-88L01	BRACKET, TRIM SENSOR	1	
12	29404-93J10	CLAMP, PTT CABLE	1	

DF40A E01
DF40ATH E01
DF50A E01
DF50ATH E01

DF60A_E01_018_315A
SENSOR

FIG.315B

FIG.315B (1-H-2) SENSOR (DF40AQH)(DF60AQH)

REF NO.	PART NO.	DESCRIPTION	Q'TY	REMARKS
1	34830-87J20	SENSOR ASSY, CYLINDER TEMP	1	
2	37820-99E02	SWITCH, OIL PRESSURE	1	
3	36656-88L10	GROMMET, PTT CABLE	1	

DF40AQH E01
DF60AQH E01
DF60AQH E40

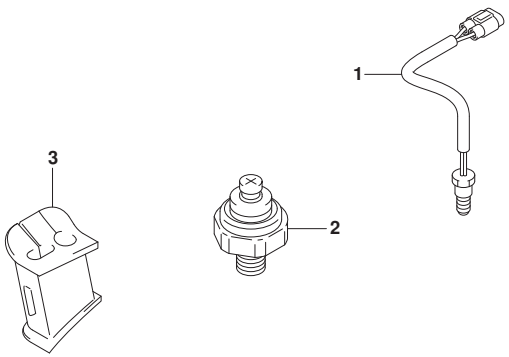

DF60A_E01_018_315B
SENSOR

FIG.315C

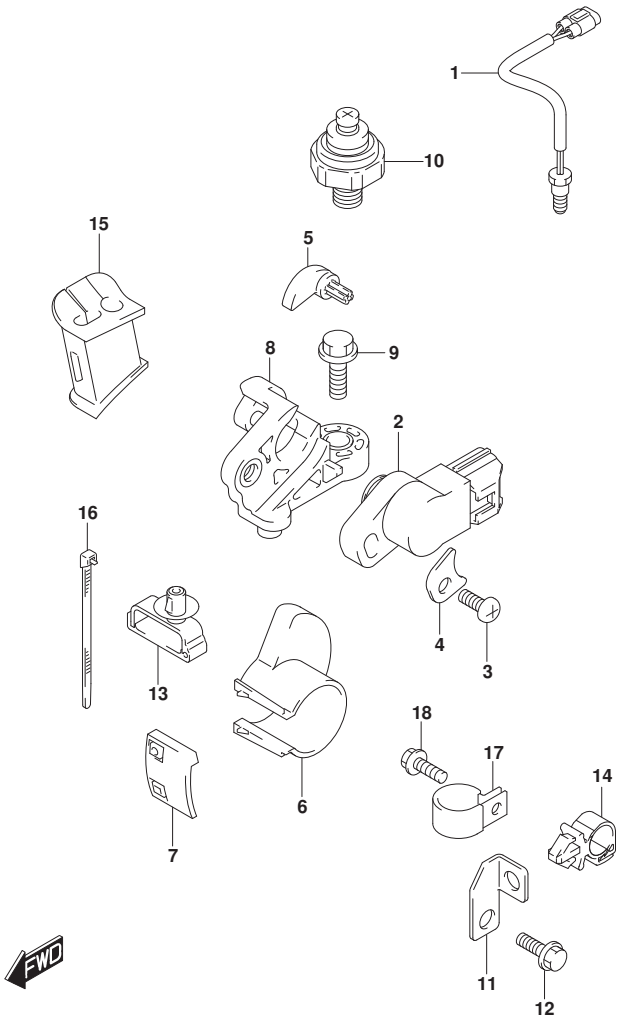

FIG.315C (1-H-3) SENSOR (DF40AST)(DF60A)(DF60ATH)(DF50AVT)(DF50AVTH)

REF NO.	PART NO.	DESCRIPTION	Q'TY	REMARKS
1	34830-87J20	SENSOR ASSY, CYLINDER TEMP	1	
2	34840-98J11	SENSOR ASSY, TRIM	1	
3	09125-05046	SCREW (5X12)	1	
4	34846-87L00	WASHER, TRIM SENSOR	1	
5	34841-87L10	LEVER, TRIM SENSOR	1	
6	34842-88L10	CAM, TRIM SENSOR UPPER	1	
7	34843-87L00	CAM, TRIM SENSOR LOWER	1	
8	34845-88L10	BRACKET, TRIM SENSOR	1	
9	09103-06093	BOLT (6X20)	1	
10	37820-99E02	SWITCH, OIL PRESSURE	1	
11	36617-88L00	BRACKET, PTT CABLE CLAMP	1	
12	29103-93J00	BOLT, PTT CABLE CLAMP BRACKET	1	
13	09403-07340	CLAMP	1	
14	09403-11321	CLAMP	1	
15	36656-88L00	GROMMET, PTT CABLE	1	
16	09407-14407	CLAMP (L:145)	2	
17	09403-13408	CLAMP	1	
18	29103-93J00	BOLT, PTT CABLE CLAMP	1	

DF40AST E34
DF60A E01
DF60A E40
DF60ATH E01
DF60ATH E40
DF50AVT E01
DF50AVTH E01

DF60A_E01_018_315C
SENSOR

FIG.315D

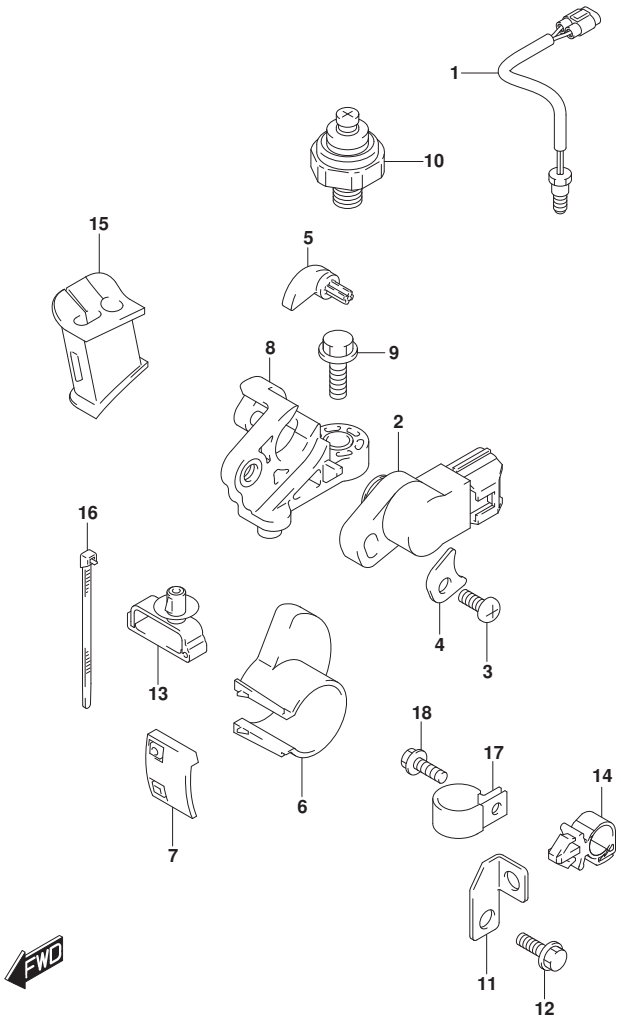

FIG.315D (1-H-4) SENSOR (DF60AVT)(DF60AVTH)

REF NO.	PART NO.	DESCRIPTION	Q'TY	REMARKS
1	34830-87J20	SENSOR ASSY, CYLINDER TEMP	1	
2	34840-98J11	SENSOR ASSY, TRIM	1	
3	09125-05046	SCREW (5X12)	1	
4	34846-87L00	WASHER, TRIM SENSOR	1	
5	34841-87L10	LEVER, TRIM SENSOR	1	
6	34842-88L10	CAM, TRIM SENSOR UPPER	1	
7	34843-87L00	CAM, TRIM SENSOR LOWER	1	
8	34845-88L10	BRACKET, TRIM SENSOR	1	
9	09103-06093	BOLT (6X20)	1	
10	37820-99E02	SWITCH, OIL PRESSURE	1	
11	36617-88L00	BRACKET, PTT CABLE CLAMP	1	
12	29103-93J00	BOLT, PTT CABLE CLAMP BRACKET	1	
13	09403-07340	CLAMP	1	
14	09403-11321	CLAMP	1	
15	36656-88L00	GROMMET, PTT CABLE	1	
16	09407-14407	CLAMP (L:145)	2	
17	09403-13408	CLAMP	1	
18	29103-93J00	BOLT, PTT CABLE CLAMP	1	

DF60AVT E01
DF60AVT E40
DF60AVTH E01
DF60AVTH E40

DF60A_E01_018_315D
SENSOR

FIG.322A

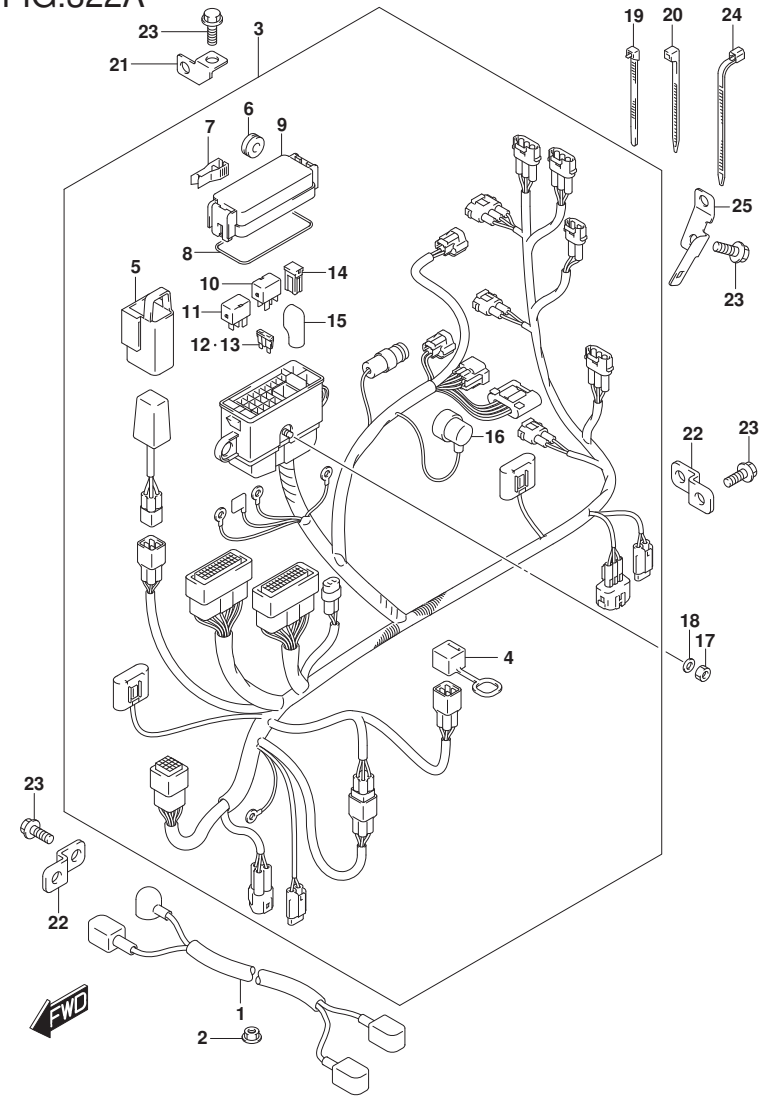

FIG.322A (1-H-5) HARNESS (DF40A)(DF40ATH)(DF50A)(DF50ATH)

REF NO.	PART NO.	DESCRIPTION	Q'TY	REMARKS
1	33810-88L10	CABLE ASSY, STARTER MOTOR	1	
2	08316-10087	NUT	1	
3	36610-88LG1	HARNESS ASSY, WIRING	1	
4	33634-96J00	.CAP, SERVICE CONNECTOR	1	
5	36668-87L00	.HOLDER, CONDENSER	1	
6	09320-08021	.CUSHION	2	
7	36737-96J00	.PULLER, FUSE	1	
8	36721-96J00	.O RING, UPPER COVER	1	
9	36738-88L00	.COVER, FUSE CASE UPPER	1	
10	38860-76F01	.RELAY, ENG CONTROL UNIT	1	
11	38860-76F01	.RELAY ASSY, STARTER MOTOR	1	
12	09481-15501	.FUSE (15A)	3	
13	09481-30501	.FUSE (30A)	3	
14	09481-30401	.FUSE (30A)	2	
15	36612-96J00	.CAP, TERMINAL	1	
16	36618-43410	.CAP, OIL PRESSURE SWITCH	1	
17	08310-00067	NUT	1	
18	08321-01067	WASHER	1	
19	09407-14403	CLAMP (L:125)	2	
20	09407-14407	CLAMP (L:145)	1	
21	36617-88L00	BRACKET, HARNESS	2	
22	36617-93J10	BRACKET, HARNESS	2	
23	01550-0612C	BOLT	5	
24	09407-18402	CLAMP (L:165)	1	
25	36617-88L20	BRACKET, HARNESS	1	

DF40A E01
DF40ATH E01
DF50A E01
DF50ATH E01

DF60A_E01_018_322A
HARNESS

FIG.322B

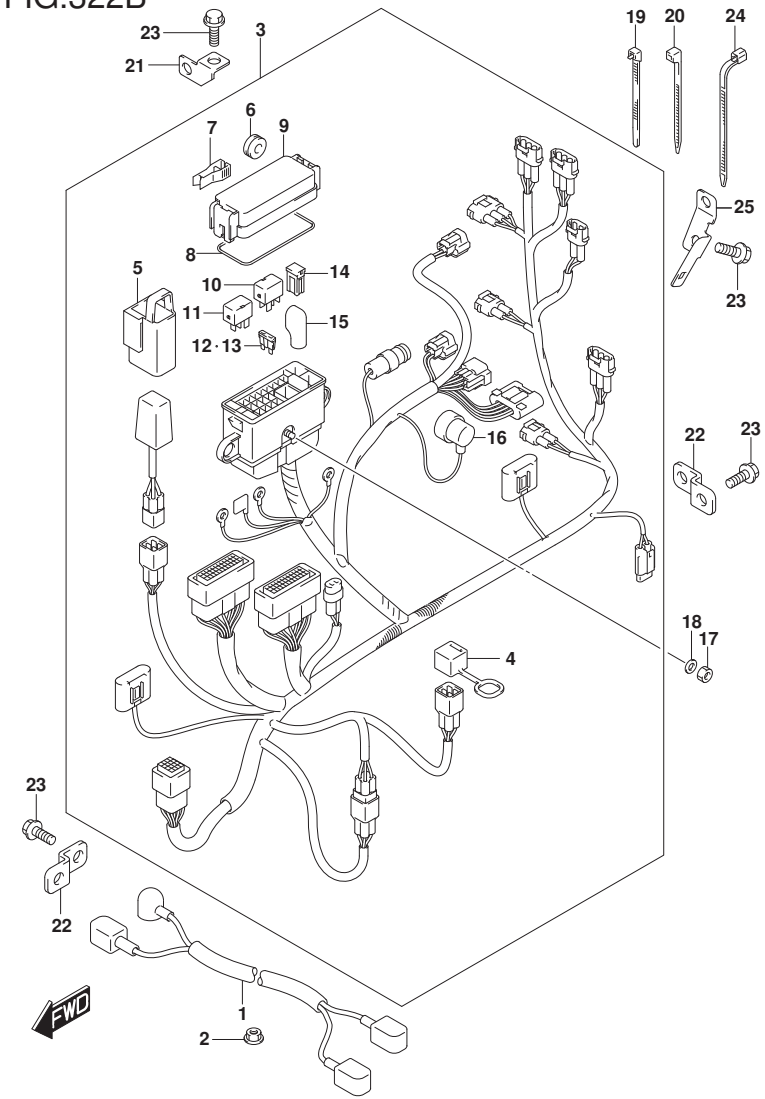

FIG.322B (1-H-6) HARNESS (DF40AQH)

REF NO.	PART NO.	DESCRIPTION	Q'TY	REMARKS
1	33810-88L10	CABLE ASSY, STARTER MOTOR	1	
2	08316-10087	NUT	1	
3	36610-88LF1	HARNESS ASSY, WIRING	1	
4	33634-96J00	.CAP, SERVICE CONNECTOR	1	
5	36668-87L00	.HOLDER, CONDENSER	1	
6	09320-08021	.CUSHION	2	
7	36737-96J00	.PULLER, FUSE	1	
8	36721-96J00	.O RING, UPPER COVER	1	
9	36738-88L00	.COVER, FUSE CASE UPPER	1	
10	38860-76F01	.RELAY, ENG CONTROL UNIT	1	
11	38860-76F01	.RELAY ASSY, STARTER MOTOR	1	
12	09481-15501	.FUSE (15A)	2	
13	09481-30501	.FUSE (30A)	3	
14	09481-30401	.FUSE (30A)	2	
15	36612-96J00	.CAP, TERMINAL	1	
16	36618-43410	.CAP, OIL PRESSURE SWITCH	1	
17	08310-00067	NUT	1	
18	08321-01067	WASHER	1	
19	09407-14403	CLAMP (L:125)	2	
20	09407-14407	CLAMP (L:145)	1	
21	36617-88L00	BRACKET, HARNESS	2	
22	36617-93J10	BRACKET, HARNESS	2	
23	01550-0612C	BOLT	5	
24	09407-18402	CLAMP (L:165)	1	
25	36617-88L20	BRACKET, HARNESS	1	

DF40AQH E01

FIG.322C

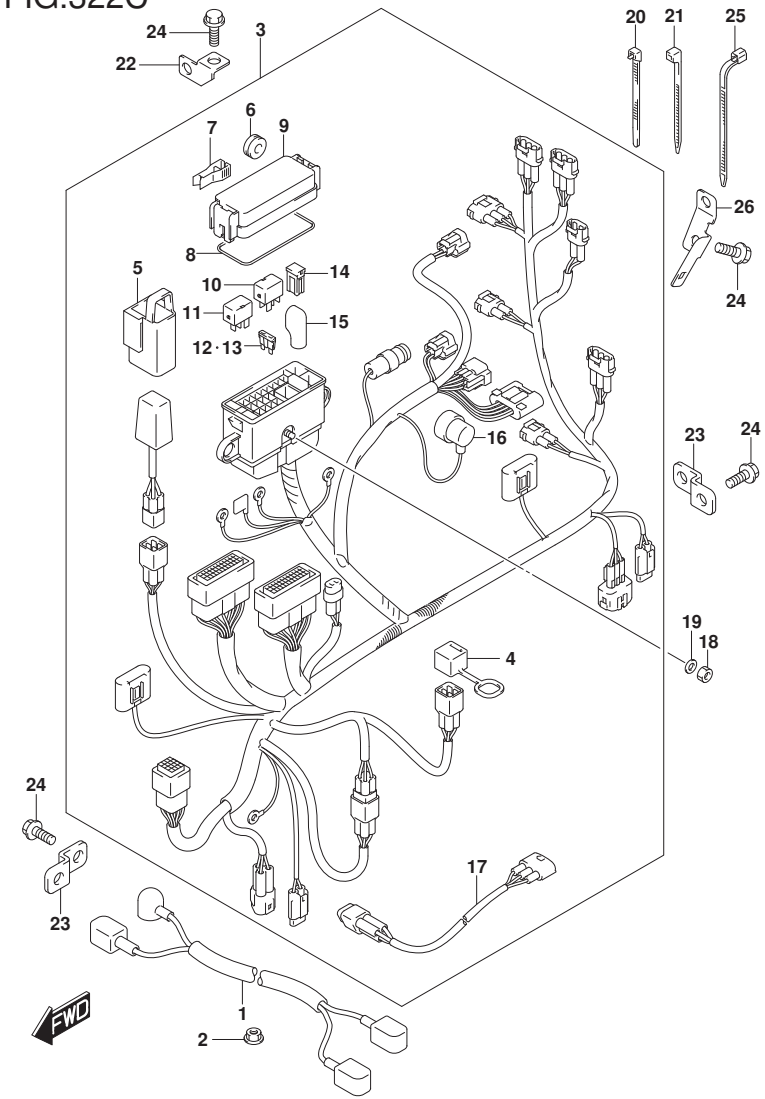

FIG.322C (1-H-7) HARNESS (DF40AST)(DF50AVT)(DF50AVTH)

REF NO.	PART NO.	DESCRIPTION	Q'TY	REMARKS
1	33810-88L10	CABLE ASSY, STARTER MOTOR	1	
2	08316-10087	NUT	1	
3	36610-88LH1	HARNESS ASSY, WIRING	1	
4	33634-96J00	.CAP, SERVICE CONNECTOR	1	
5	36668-87L00	.HOLDER, CONDENSER	1	
6	09320-08021	.CUSHION	2	
7	36737-96J00	.PULLER, FUSE	1	
8	36721-96J00	.O RING, UPPER COVER	1	
9	36738-88L00	.COVER, FUSE CASE UPPER	1	
10	38860-76F01	.RELAY, ENG CONTROL UNIT	1	
11	38860-76F01	.RELAY ASSY, STARTER MOTOR	1	
12	09481-15501	.FUSE (15A)	3	
13	09481-30501	.FUSE (30A)	3	
14	09481-30401	.FUSE (30A)	2	
15	36612-96J00	.CAP, TERMINAL	1	
16	36618-43410	.CAP, OIL PRESSURE SWITCH	1	
17	36611-88L00	.HARNESS ASSY, WIRING SUB	1	
18	08310-00067	NUT	1	
19	08321-01067	WASHER	1	
20	09407-14403	CLAMP (L:125)	2	
21	09407-14407	CLAMP (L:145)	1	
22	36617-88L00	BRACKET, HARNESS	2	
23	36617-93J10	BRACKET, HARNESS	2	
24	01550-0612C	BOLT	5	
25	09407-18402	CLAMP (L:165)	1	
26	36617-88L20	BRACKET, HARNESS	1	

DF40AST E34
DF50AVT E01
DF50AVTH E01

FIG.322D

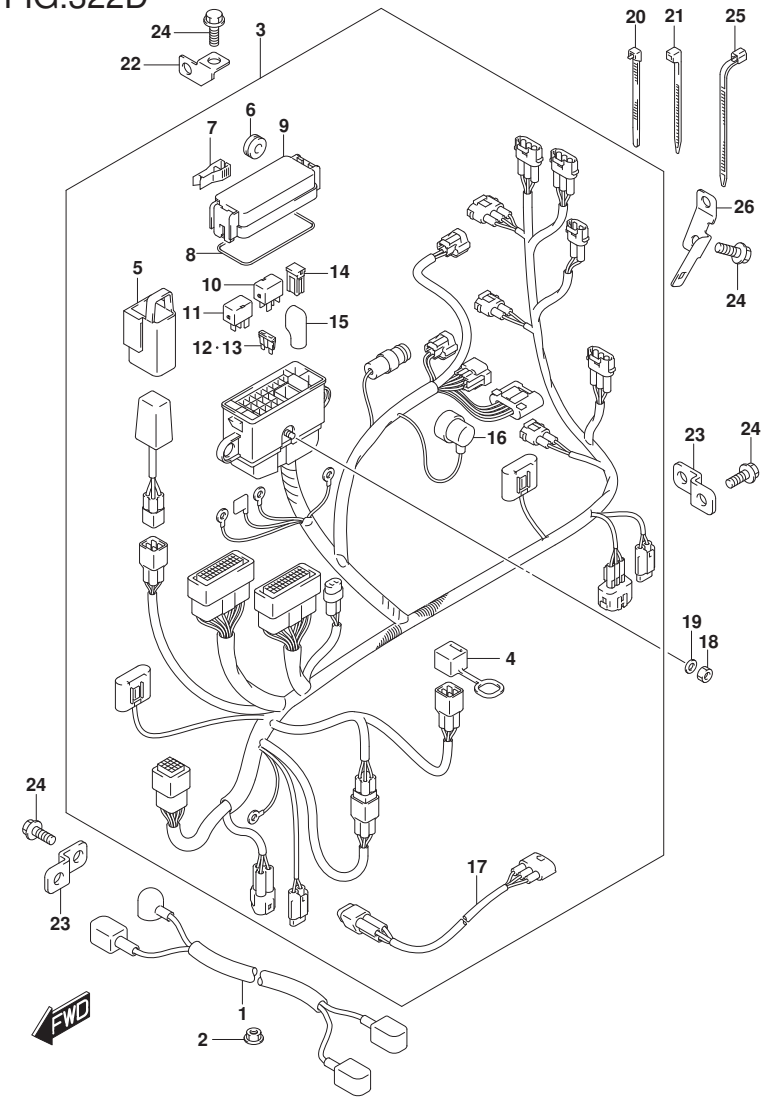

FIG.322D (1-H-8) HARNESS (DF60A)(DF60ATH)(DF60AVT)(DF60AVTH)

REF NO.	PART NO.	DESCRIPTION	Q'TY	REMARKS
1	33810-88L10	CABLE ASSY, STARTER MOTOR	1	
2	08316-10087	NUT	1	
3	36610-88LK0	HARNESS ASSY, WIRING	1	
4	33634-96J00	.CAP, SERVICE CONNECTOR	1	
5	36668-87L00	.HOLDER, CONDENSER	1	
6	09320-08021	.CUSHION	2	
7	36737-96J00	.PULLER, FUSE	1	
8	36721-96J00	.O RING, UPPER COVER	1	
9	36738-88L00	.COVER, FUSE CASE UPPER	1	
10	38860-76F01	.RELAY, ENG CONTROL UNIT	1	
11	38860-76F01	.RELAY ASSY, STARTER MOTOR	1	
12	09481-15501	.FUSE (15A)	3	
13	09481-30501	.FUSE (30A)	3	
14	09481-30401	.FUSE (30A)	2	
15	36612-96J00	.CAP, TERMINAL	1	
16	36618-43410	.CAP, OIL PRESSURE SWITCH	1	
17	36611-88L00	.HARNESS ASSY, WIRING SUB	1	
18	08310-00067	NUT	1	
19	08321-01067	WASHER	1	
20	09407-14403	CLAMP (L:125)	2	
21	09407-14407	CLAMP (L:145)	1	
22	36617-88L00	BRACKET, HARNESS	2	

FIG.322D

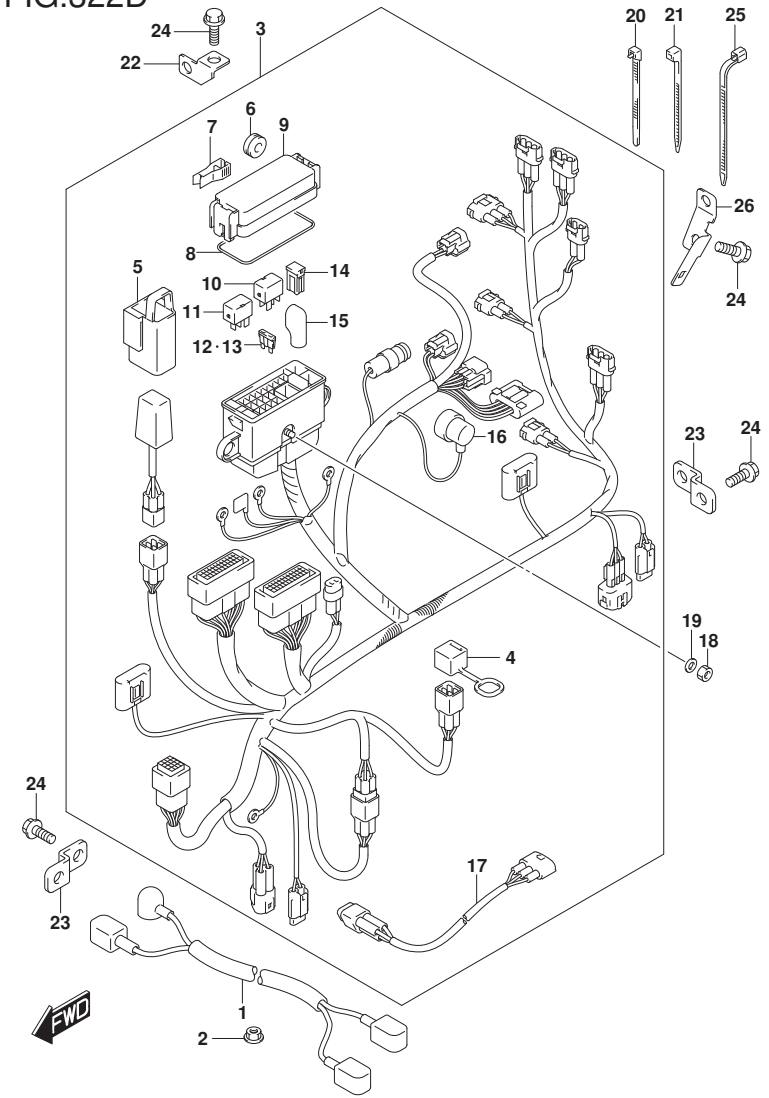

FIG.322D (1-H-9) HARNESS (DF60A)(DF60ATH)(DF60AVT)(DF60AVTH)

REF NO.	PART NO.	DESCRIPTION	Q'TY	REMARKS
23	36617-93J10	BRACKET, HARNESS	2	
24	01550-0612C	BOLT	5	
25	09407-18402	CLAMP (L:165)	1	
26	36617-88L20	BRACKET, HARNESS	1	

DF60A E01
DF60A E40
DF60ATH E01
DF60ATH E40
DF60AVT E01
DF60AVT E40
DF60AVTH E01
DF60AVTH E40

FIG.322E

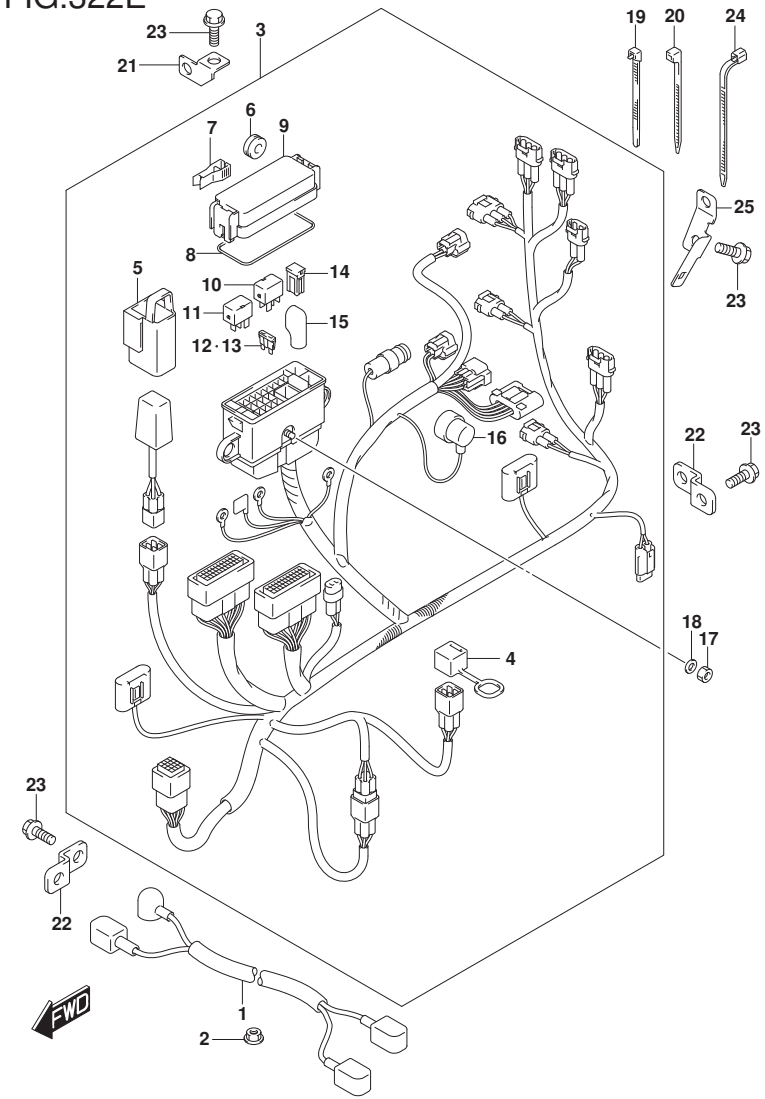

FIG.322E (1-H-10) HARNESS (DF60AQH)

REF NO.	PART NO.	DESCRIPTION	Q'TY	REMARKS
1	33810-88L10	CABLE ASSY, STARTER MOTOR	1	
2	08316-10087	NUT	1	
3	36610-88LJ0	HARNESS ASSY, WIRING	1	
4	33634-96J00	.CAP, SERVICE CONNECTOR	1	
5	36668-87L00	.HOLDER, CONDENSER	1	
6	09320-08021	.CUSHION	2	
7	36737-96J00	.PULLER, FUSE	1	
8	36721-96J00	.O RING, UPPER COVER	1	
9	36738-88L00	.COVER, FUSE CASE UPPER	1	
10	38860-76F01	.RELAY, ENG CONTROL UNIT	1	
11	38860-76F01	.RELAY ASSY, STARTER MOTOR	1	
12	09481-15501	.FUSE (15A)	2	
13	09481-30501	.FUSE (30A)	3	
14	09481-30401	.FUSE (30A)	2	
15	36612-96J00	.CAP, TERMINAL	1	
16	36618-43410	.CAP, OIL PRESSURE SWITCH	1	
17	08310-00067	NUT	1	
18	08321-01067	WASHER	1	
19	09407-14403	CLAMP (L:125)	2	
20	09407-14407	CLAMP (L:145)	1	
21	36617-88L00	BRACKET, HARNESS	2	
22	36617-93J10	BRACKET, HARNESS	2	
23	01550-0612C	BOLT	5	
24	09407-18402	CLAMP (L:165)	1	
25	36617-88L20	BRACKET, HARNESS	1	

DF60AQH E01
DF60AQH E40

DF60A_E01_018_322E
HARNESS

FIG.326A

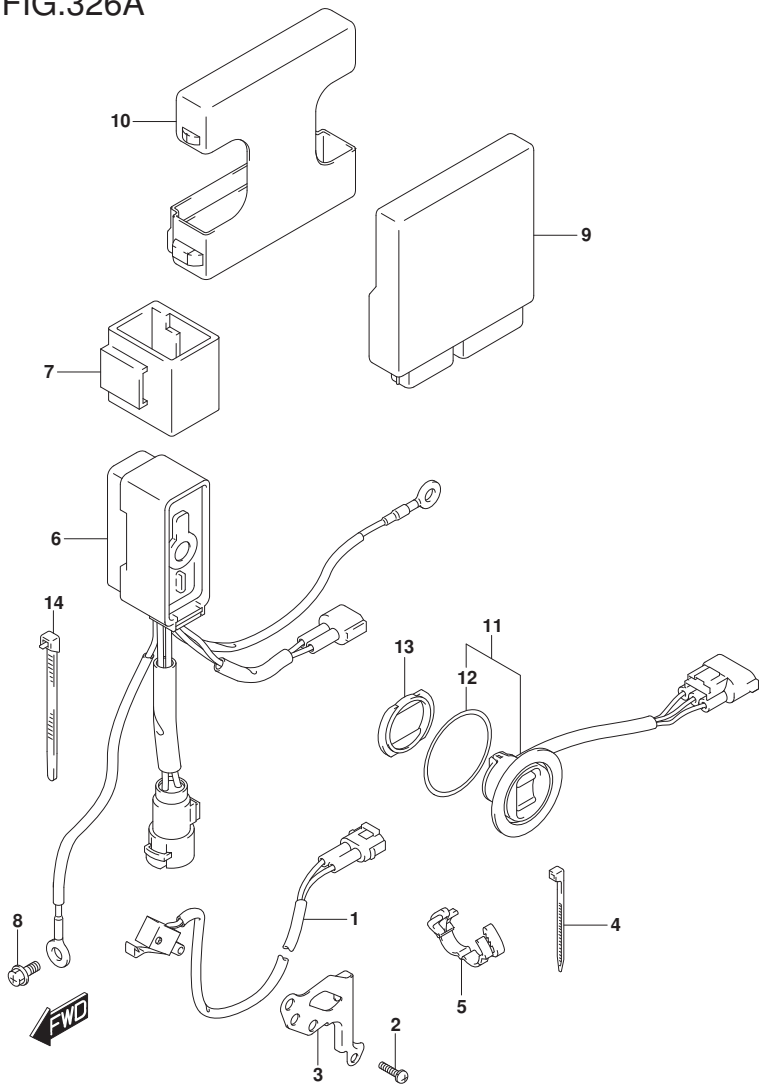

FIG.326A (1-H-11) PTT SWITCH/ENGINE CONTROL UNIT (DF40A E01)(DF40ATH E01)

REF NO.	PART NO.	DESCRIPTION	Q'TY	REMARKS
1	37721-93J00	SWITCH ASSY, NEUTRAL	1	
2	09137-04004	SCREW (4X16)	2	
3	37725-88L00	BRACKET, NEUTRAL SWITCH	1	
4	09407-10404	CLAMP (L:100)	1	
5	09408-00184	CLAMP	1	
6	38410-93J12	RELAY ASSY, PTT	1	
7	38415-93J00	HOLDER, PTT RELAY	1	
8	01550-06127	BOLT	1	
9	33940-88LA0	UNIT, ENGINE CONTROL	1	
10	33925-88L10	CUSHION, ENGINE CONTROL UNIT	1	
11	37850-92J00	SWITCH ASSY, PTT	1	
12	37856-92J00	.TAPE, PTT SWITCH	1	
13	37857-92J00	BUSH, PTT SWITH	1	
14	09407-14407	CLAMP (L:145)	1	

DF40A E01
DF40ATH E01

DF60A_E01_018_326A
PTT SWITCH/ENGINE CONTROL UNIT

FIG.326B

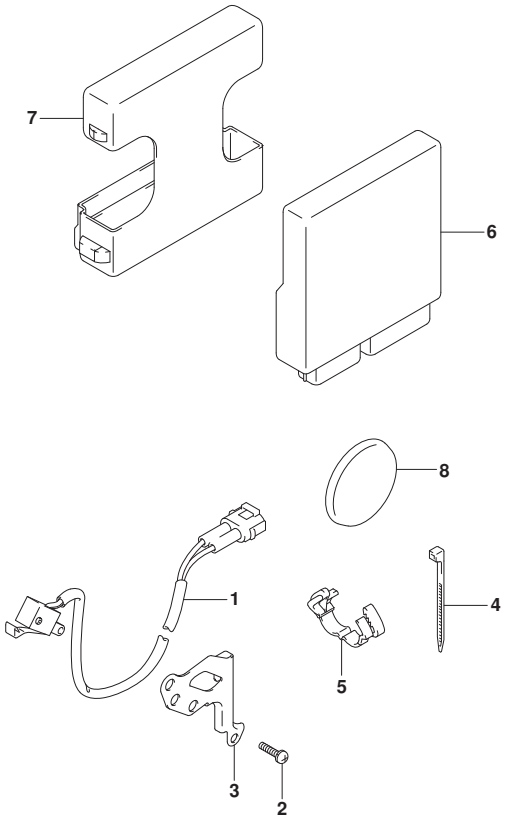

FIG.326B (1-H-12) PTT SWITCH/ENGINE CONTROL UNIT (DF40AQH 0E1)

REF NO.	PART NO.	DESCRIPTION	Q'TY	REMARKS
1	37721-93J00	SWITCH ASSY, NEUTRAL	1	
2	09137-04004	SCREW (4X16)	2	
3	37725-88L00	BRACKET, NEUTRAL SWITCH	1	
4	09407-10404	CLAMP (L:100)	1	
5	09408-00184	CLAMP	1	
6	33940-88LA0	UNIT, ENGINE CONTROL	1	
7	33925-88L10	CUSHION, ENGINE CONTROL UNIT	1	
8	09250-40002	CAP (OD:52)	1	

DF40AQH E01

DF60A_E01_018_326B
PTT SWITCH/ENGINE CONTROL UNIT

FIG.326C

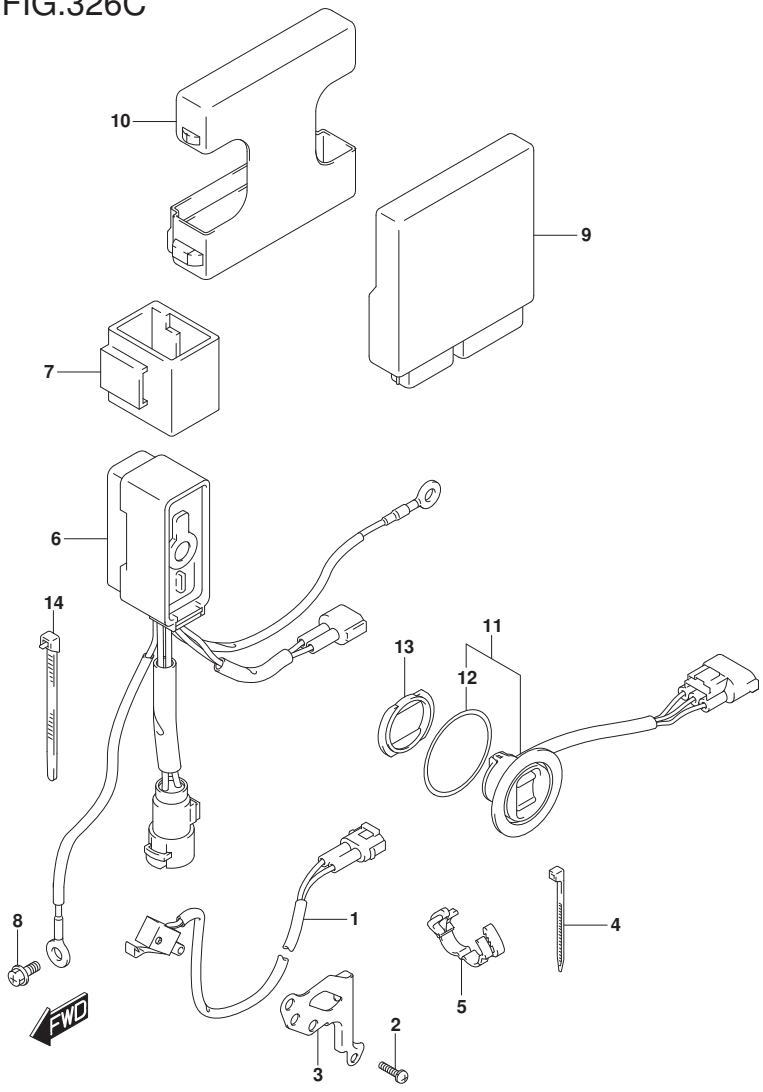

FIG.326C (1-H-13) PTT SWITCH/ENGINE CONTROL UNIT (DF40AST E34)

REF NO.	PART NO.	DESCRIPTION	Q'TY	REMARKS
1	37721-93J00	SWITCH ASSY, NEUTRAL	1	
2	09137-04004	SCREW (4X16)	2	
3	37725-88L00	BRACKET, NEUTRAL SWITCH	1	
4	09407-10404	CLAMP (L:100)	1	
5	09408-00184	CLAMP	1	
6	38410-93J12	RELAY ASSY, PTT	1	
7	38415-93J00	HOLDER, PTT RELAY	1	
8	01550-06127	BOLT	1	
9	33940-88LB0	UNIT, ENGINE CONTROL	1	
10	33925-88L10	CUSHION, ENGINE CONTROL UNIT	1	
11	37850-92J00	SWITCH ASSY, PTT	1	
12	37856-92J00	.TAPE, PTT SWITCH	1	
13	37857-92J00	BUSH, PTT SWITH	1	
14	09407-14407	CLAMP (L:145)	1	

DF40AST E34

DF60A_E01_018_326C
PTT SWITCH/ENGINE CONTROL UNIT

FIG.326D

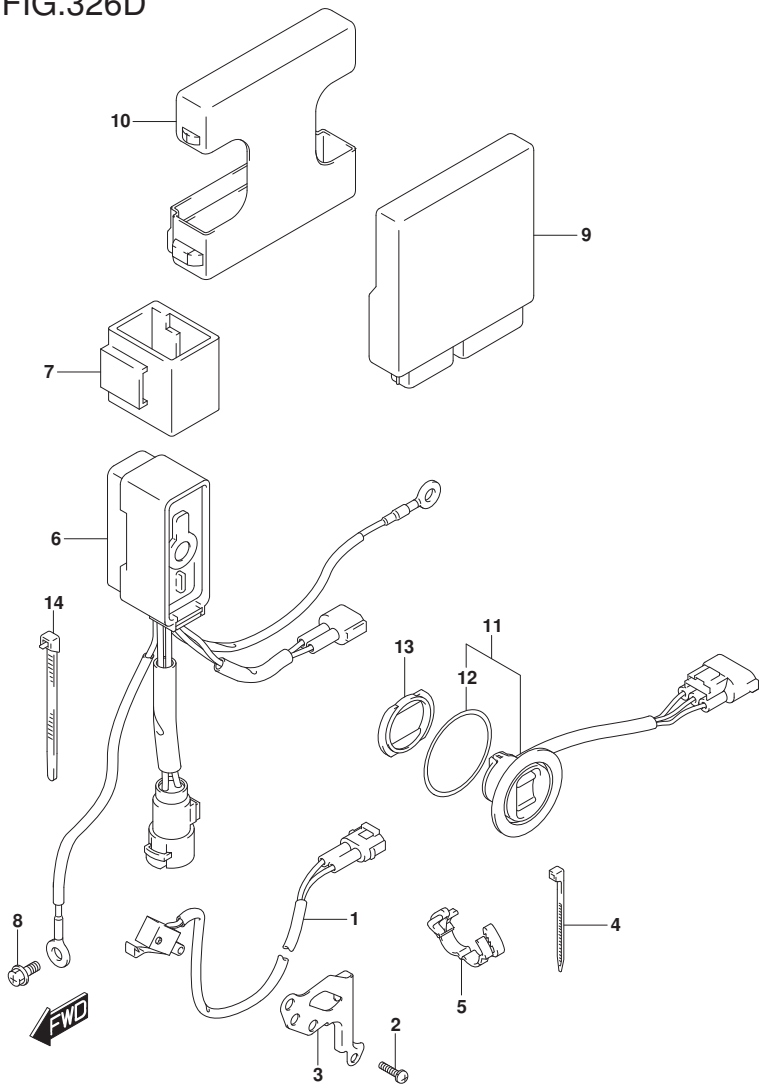

FIG.326D (1-H-14) PTT SWITCH/ENGINE CONTROL UNIT (DF50A E01)(DF50ATH E01)

REF NO.	PART NO.	DESCRIPTION	Q'TY	REMARKS
1	37721-93J00	SWITCH ASSY, NEUTRAL	1	
2	09137-04004	SCREW (4X16)	2	
3	37725-88L00	BRACKET, NEUTRAL SWITCH	1	
4	09407-10404	CLAMP (L:100)	1	
5	09408-00184	CLAMP	1	
6	38410-93J12	RELAY ASSY, PTT	1	
7	38415-93J00	HOLDER, PTT RELAY	1	
8	01550-06127	BOLT	1	
9	33940-88LC0	UNIT, ENGINE CONTROL	1	
10	33925-88L10	CUSHION, ENGINE CONTROL UNIT	1	
11	37850-92J00	SWITCH ASSY, PTT	1	
12	37856-92J00	.TAPE, PTT SWITCH	1	
13	37857-92J00	BUSH, PTT SWITH	1	
14	09407-14407	CLAMP (L:145)	1	

DF50A E01
DF50ATH E01

DF60A_E01_018_326D
PTT SWITCH/ENGINE CONTROL UNIT

FIG.326E

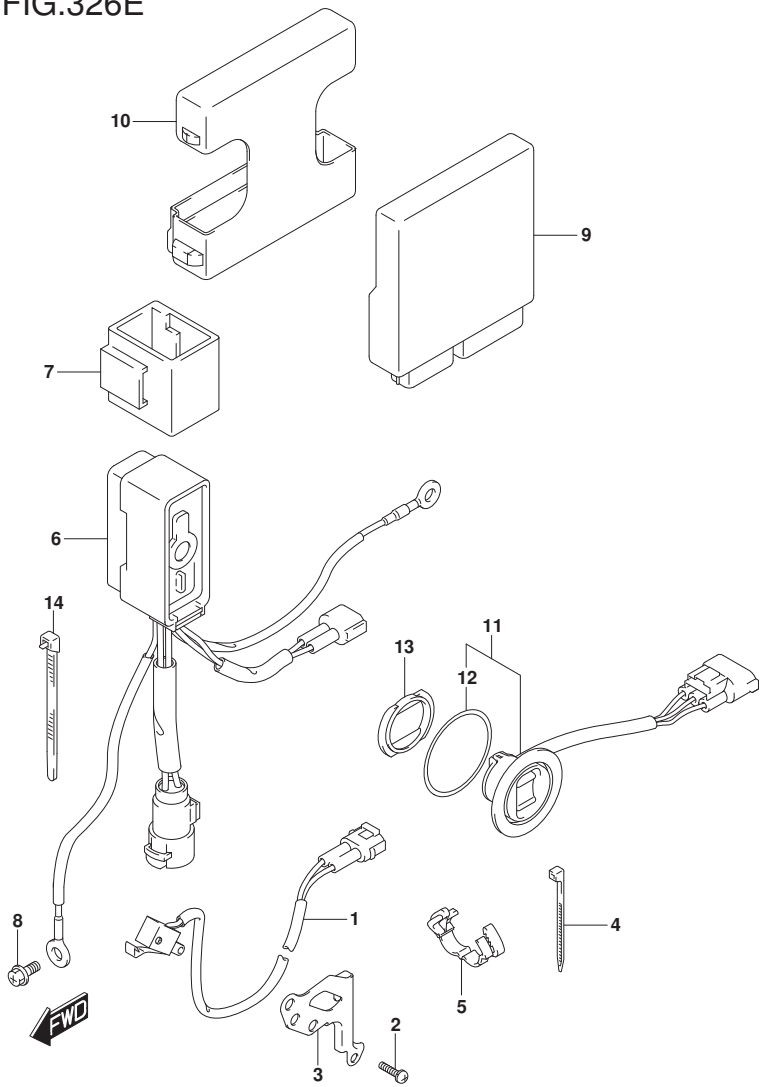

FIG.326E (1-H-15) PTT SWITCH/ENGINE CONTROL UNIT (DF60A E01)(DF60ATH E01)

REF NO.	PART NO.	DESCRIPTION	Q'TY	REMARKS
1	37721-93J00	SWITCH ASSY, NEUTRAL	1	
2	09137-04004	SCREW (4X16)	2	
3	37725-88L00	BRACKET, NEUTRAL SWITCH	1	
4	09407-10404	CLAMP (L:100)	1	
5	09408-00184	CLAMP	1	
6	38410-93J12	RELAY ASSY, PTT	1	
7	38415-93J00	HOLDER, PTT RELAY	1	
8	01550-06127	BOLT	1	
9	33940-88L80	UNIT, ENGINE CONTROL	1	
10	33925-88L10	CUSHION, ENGINE CONTROL UNIT	1	
11	37850-92J00	SWITCH ASSY, PTT	1	
12	37856-92J00	.TAPE, PTT SWITCH	1	
13	37857-92J00	BUSH, PTT SWITH	1	
14	09407-14407	CLAMP (L:145)	1	

DF60A E01
DF60ATH E01

DF60A_E01_018_326E
PTT SWITCH/ENGINE CONTROL UNIT

FIG.326F

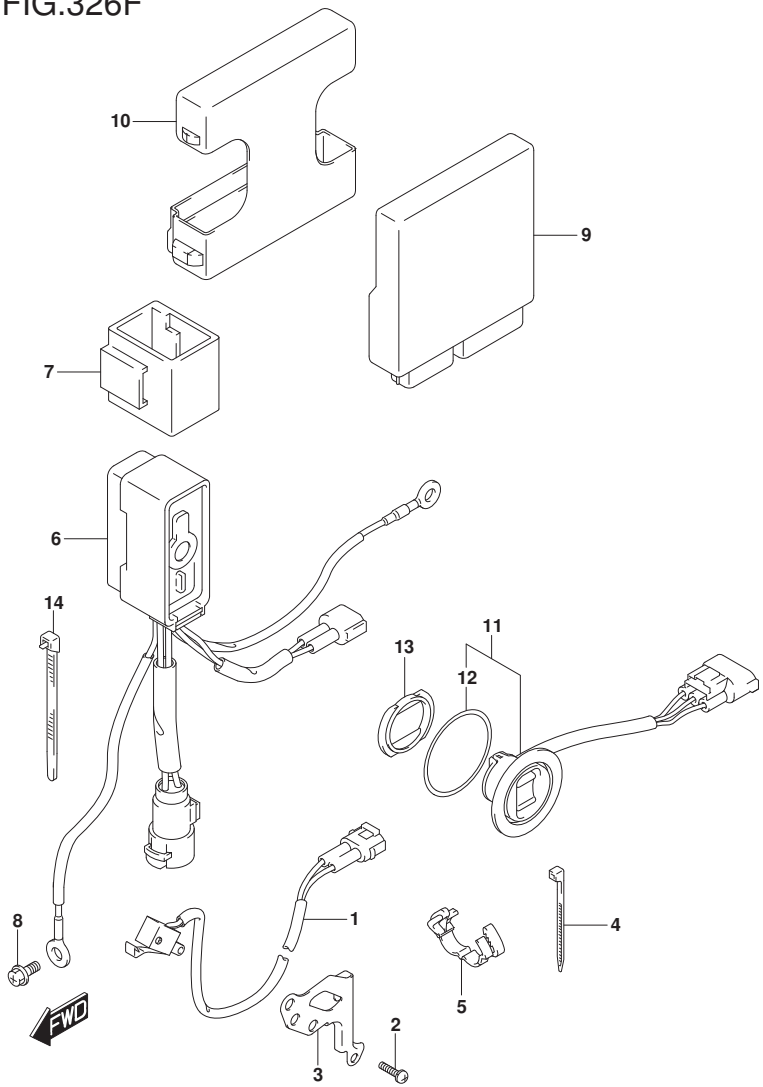

FIG.326F (1-I-2) PTT SWITCH/ENGINE CONTROL UNIT (DF60A E40)(DF60ATH E40)

REF NO.	PART NO.	DESCRIPTION	Q'TY	REMARKS
1	37721-93J00	SWITCH ASSY, NEUTRAL	1	
2	09137-04004	SCREW (4X16)	2	
3	37725-88L00	BRACKET, NEUTRAL SWITCH	1	
4	09407-10404	CLAMP (L:100)	1	
5	09408-00184	CLAMP	1	
6	38410-93J12	RELAY ASSY, PTT	1	
7	38415-93J00	HOLDER, PTT RELAY	1	
8	01550-06127	BOLT	1	
9	33940-88L90	UNIT, ENGINE CONTROL	1	
10	33925-88L10	CUSHION, ENGINE CONTROL UNIT	1	
11	37850-92J00	SWITCH ASSY, PTT	1	
12	37856-92J00	.TAPE, PTT SWITCH	1	
13	37857-92J00	BUSH, PTT SWITH	1	
14	09407-14407	CLAMP (L:145)	1	

DF60A E40
DF60ATH E40

DF60A_E01_018_326F
PTT SWITCH/ENGINE CONTROL UNIT

FIG.326G

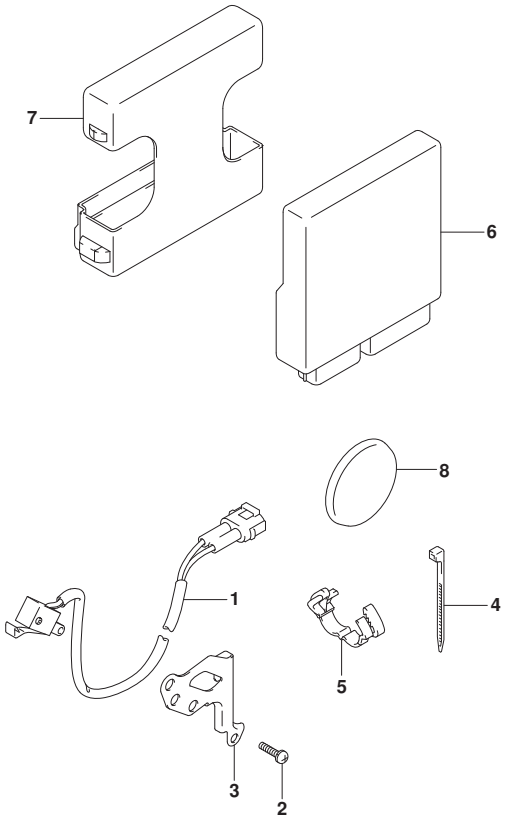

FIG.326G (1-I-3) PTT SWITCH/ENGINE CONTROL UNIT (DF60AQH E01)

REF NO.	PART NO.	DESCRIPTION	Q'TY	REMARKS
1	37721-93J00	SWITCH ASSY, NEUTRAL	1	
2	09137-04004	SCREW (4X16)	2	
3	37725-88L00	BRACKET, NEUTRAL SWITCH	1	
4	09407-10404	CLAMP (L:100)	1	
5	09408-00184	CLAMP	1	
6	33940-88L80	UNIT, ENGINE CONTROL	1	
7	33925-88L10	CUSHION, ENGINE CONTROL UNIT	1	
8	09250-40002	CAP (OD:52)	1	

DF60AQH E01

DF60A_E01_018_326G
PTT SWITCH/ENGINE CONTROL UNIT

FIG.326H

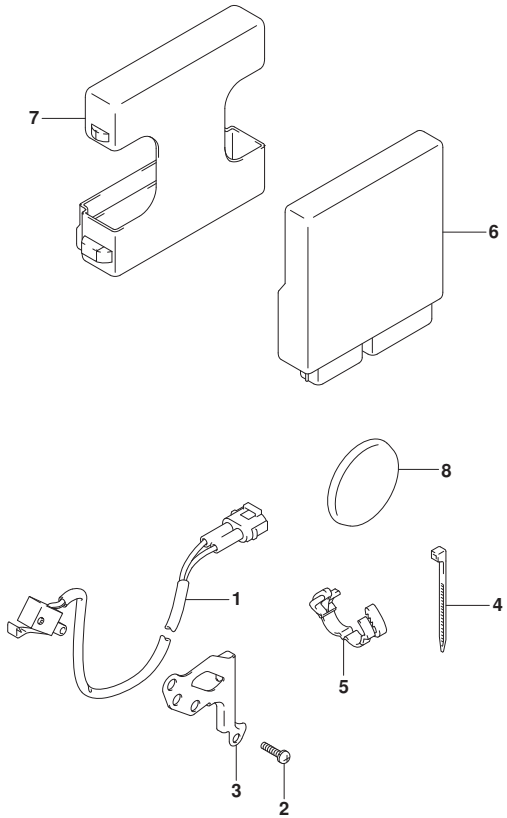

FIG.326H (1-I-4) PTT SWITCH/ENGINE CONTROL UNIT (DF60AQH E40)

REF NO.	PART NO.	DESCRIPTION	Q'TY	REMARKS
1	37721-93J00	SWITCH ASSY, NEUTRAL	1	
2	09137-04004	SCREW (4X16)	2	
3	37725-88L00	BRACKET, NEUTRAL SWITCH	1	
4	09407-10404	CLAMP (L:100)	1	
5	09408-00184	CLAMP	1	
6	33940-88L90	UNIT, ENGINE CONTROL	1	
7	33925-88L10	CUSHION, ENGINE CONTROL UNIT	1	
8	09250-40002	CAP (OD:52)	1	

DF60AQH E40

DF60A_E01_018_326H
PTT SWITCH/ENGINE CONTROL UNIT

FIG.326J

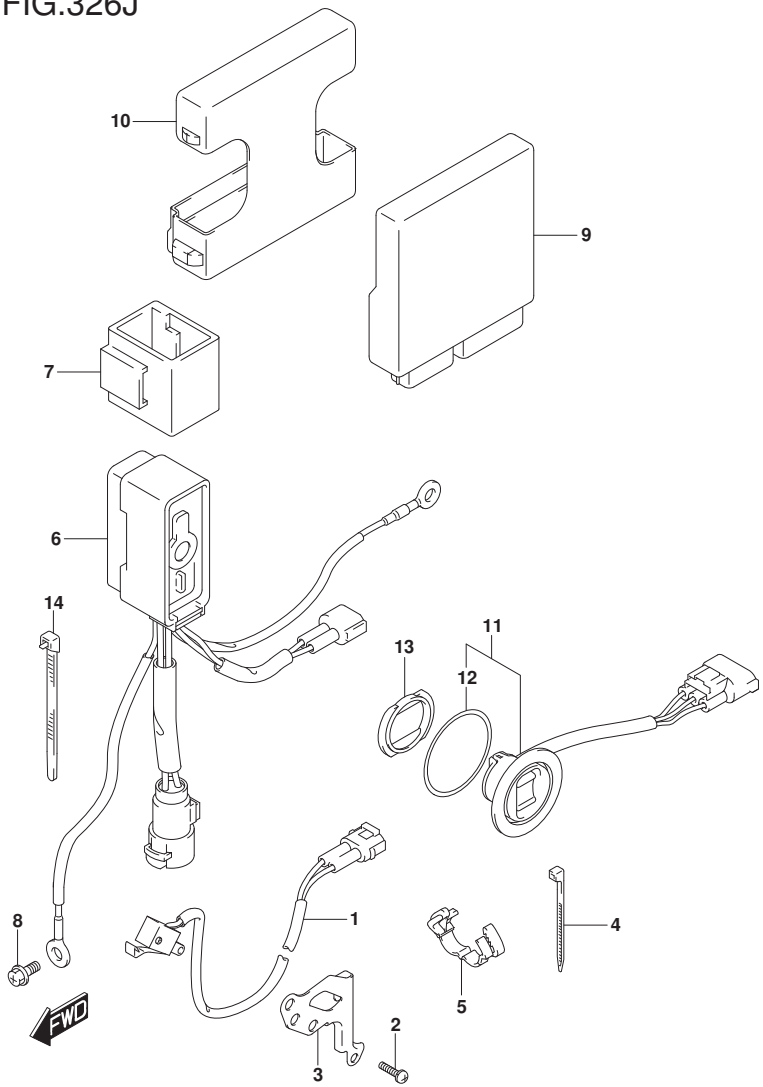

FIG.326J (1-I-5) PTT SWITCH/ENGINE CONTROL UNIT (DF50AVT E01)(DF50AVTH E01)

REF NO.	PART NO.	DESCRIPTION	Q'TY	REMARKS
1	37721-93J00	SWITCH ASSY, NEUTRAL	1	
2	09137-04004	SCREW (4X16)	2	
3	37725-88L00	BRACKET, NEUTRAL SWITCH	1	
4	09407-10404	CLAMP (L:100)	1	
5	09408-00184	CLAMP	1	
6	38410-93J12	RELAY ASSY, PTT	1	
7	38415-93J00	HOLDER, PTT RELAY	1	
8	01550-06127	BOLT	1	
9	33940-88LF0	UNIT, ENGINE CONTROL	1	
10	33925-88L10	CUSHION, ENGINE CONTROL UNIT	1	
11	37850-92J00	SWITCH ASSY, PTT	1	
12	37856-92J00	.TAPE, PTT SWITCH	1	
13	37857-92J00	BUSH, PTT SWITH	1	
14	09407-14407	CLAMP (L:145)	1	

DF50AVT E01
DF50AVTH E01

DF60A_E01_018_326J
PTT SWITCH/ENGINE CONTROL UNIT

FIG.326K

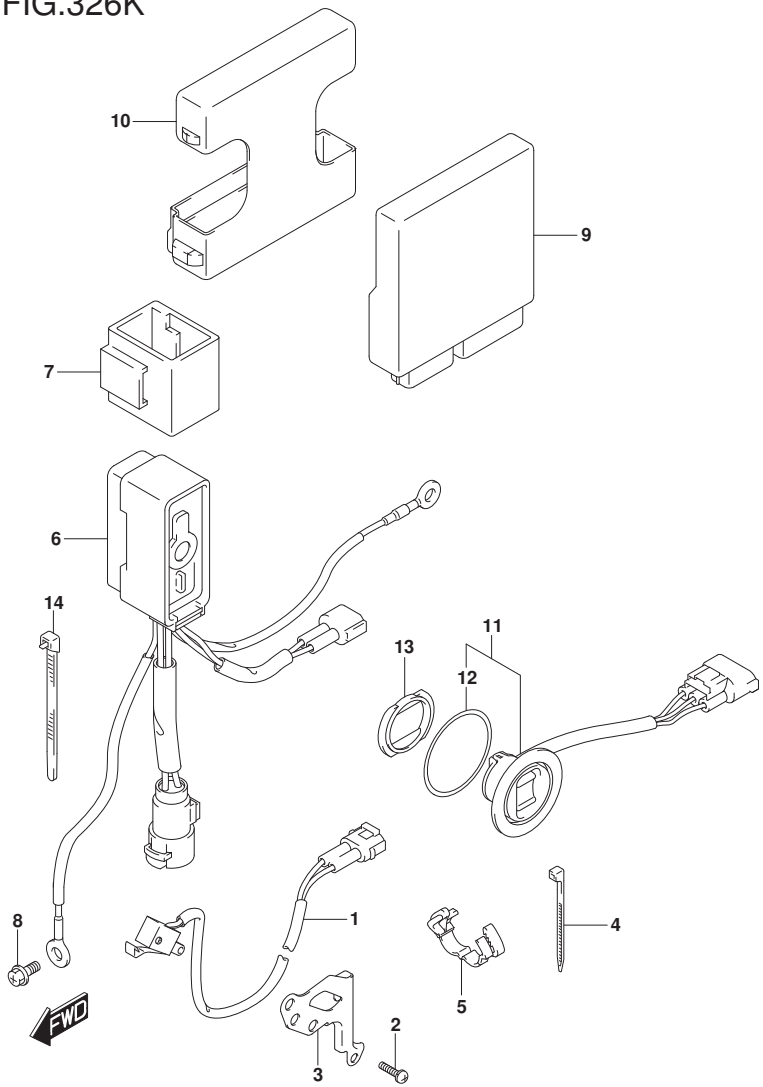

FIG.326K (1-I-6) PTT SWITCH/ENGINE CONTROL UNIT (DF60AVT E01)(DF60AVTH E01)

REF NO.	PART NO.	DESCRIPTION	Q'TY	REMARKS
1	37721-93J00	SWITCH ASSY, NEUTRAL	1	
2	09137-04004	SCREW (4X16)	2	
3	37725-88L00	BRACKET, NEUTRAL SWITCH	1	
4	09407-10404	CLAMP (L:100)	1	
5	09408-00184	CLAMP	1	
6	38410-93J12	RELAY ASSY, PTT	1	
7	38415-93J00	HOLDER, PTT RELAY	1	
8	01550-06127	BOLT	1	
9	33940-88LD0	UNIT, ENGINE CONTROL	1	
10	33925-88L10	CUSHION, ENGINE CONTROL UNIT	1	
11	37850-92J00	SWITCH ASSY, PTT	1	
12	37856-92J00	.TAPE, PTT SWITCH	1	
13	37857-92J00	BUSH, PTT SWITH	1	
14	09407-14407	CLAMP (L:145)	1	

DF60AVT E01
DF60AVTH E01

DF60A_E01_018_326K
PTT SWITCH/ENGINE CONTROL UNIT

FIG.326L

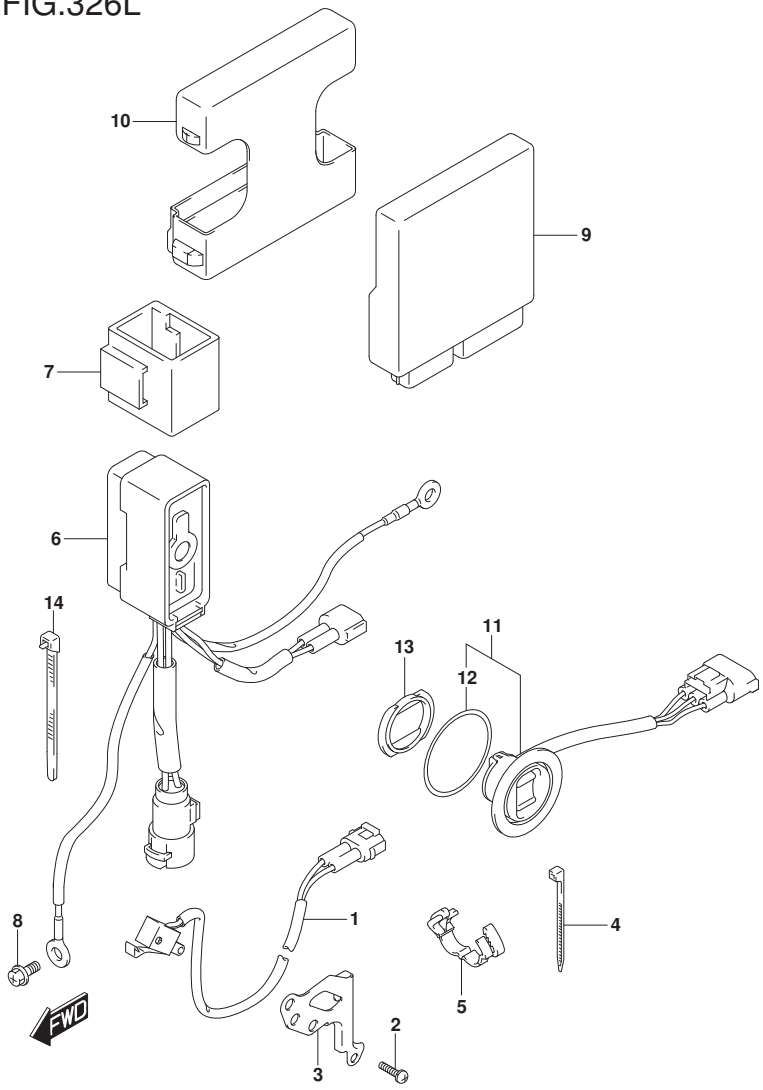

FIG.326L (1-I-7) PTT SWITCH/ENGINE CONTROL UNIT (DF60AVT E40)(DF60AVTH E40)

REF NO.	PART NO.	DESCRIPTION	Q'TY	REMARKS
1	37721-93J00	SWITCH ASSY, NEUTRAL	1	
2	09137-04004	SCREW (4X16)	2	
3	37725-88L00	BRACKET, NEUTRAL SWITCH	1	
4	09407-10404	CLAMP (L:100)	1	
5	09408-00184	CLAMP	1	
6	38410-93J12	RELAY ASSY, PTT	1	
7	38415-93J00	HOLDER, PTT RELAY	1	
8	01550-06127	BOLT	1	
9	33940-88LE0	UNIT, ENGINE CONTROL	1	
10	33925-88L10	CUSHION, ENGINE CONTROL UNIT	1	
11	37850-92J00	SWITCH ASSY, PTT	1	
12	37856-92J00	.TAPE, PTT SWITCH	1	
13	37857-92J00	BUSH, PTT SWITH	1	
14	09407-14407	CLAMP (L:145)	1	

DF60AVT E40
DF60AVTH E40

DF60A_E01_018_326L
PTT SWITCH/ENGINE CONTROL UNIT

FIG.335A

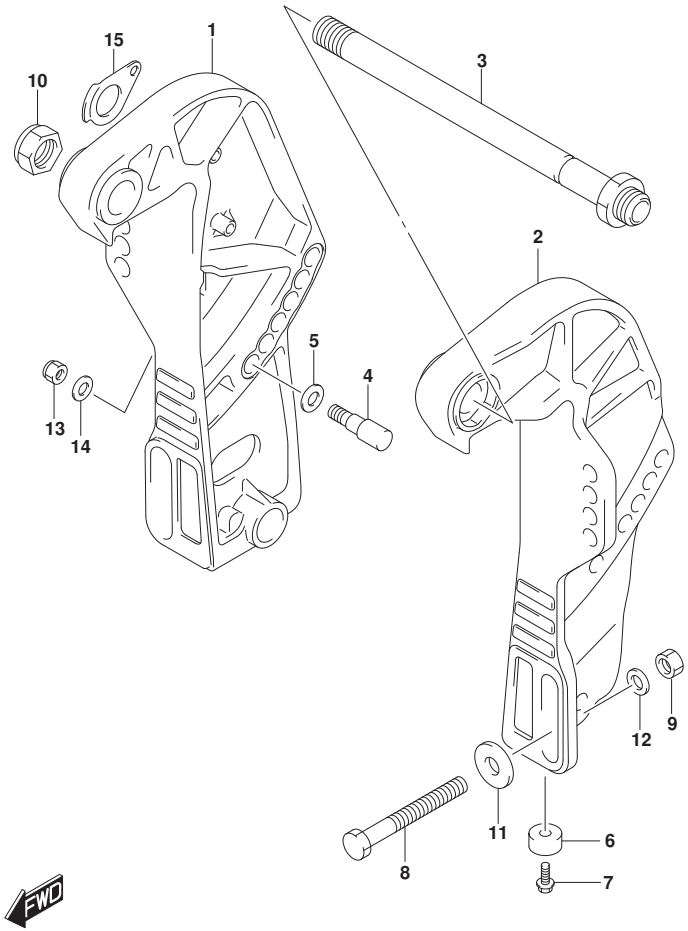

FIG.335A (1-I-8) CLAMP BRACKET (DF40A)(DF50A)

REF NO.	PART NO.	DESCRIPTION	Q'TY	REMARKS
1-1	41111-88L20-YAY	BRACKET, CLAMP STBD (BLACK)	1	
1-2	41111-88L20-Y5S	BRACKET, CLAMP STBD (WHITE)	1	
2-1	41121-88L10-YAY	BRACKET, CLAMP PORT (BLACK)	1	
2-2	41121-88L10-Y5S	BRACKET, CLAMP PORT (WHITE)	1	
3	41130-87J11	SHAFT, CLAMP BRACKET	1	
4	45421-89J00	PIN, TILT LOCK	2	
5	09160-12066	WASHER (12.5X22X2.5)	2	
6	55321-87J01	ANODE, PROTECTION	2	
7	09103-06281	BOLT (6X14)	2	
8-1	09100-12093	BOLT (12X100)	4	
8-2	09100-12091	BOLT (12X115)	1	OPT
9	09159-12014	NUT	4	
10	09159-22006	NUT	1	
11	09160-12128	WASHER (12.5X35X3)	4	
12	09160-12126	WASHER (12.5X22X3)	4	
13	09159-10050	NUT	2	
14	09160-10082	WASHER (10.5X19X2)	2	
15	41135-93J00	WASHER, CLAMP BRACKET SHAFT	1	

DF40A E01
DF50A E01

DF60A_E01_018_335A
CLAMP BRACKET

FIG.335B

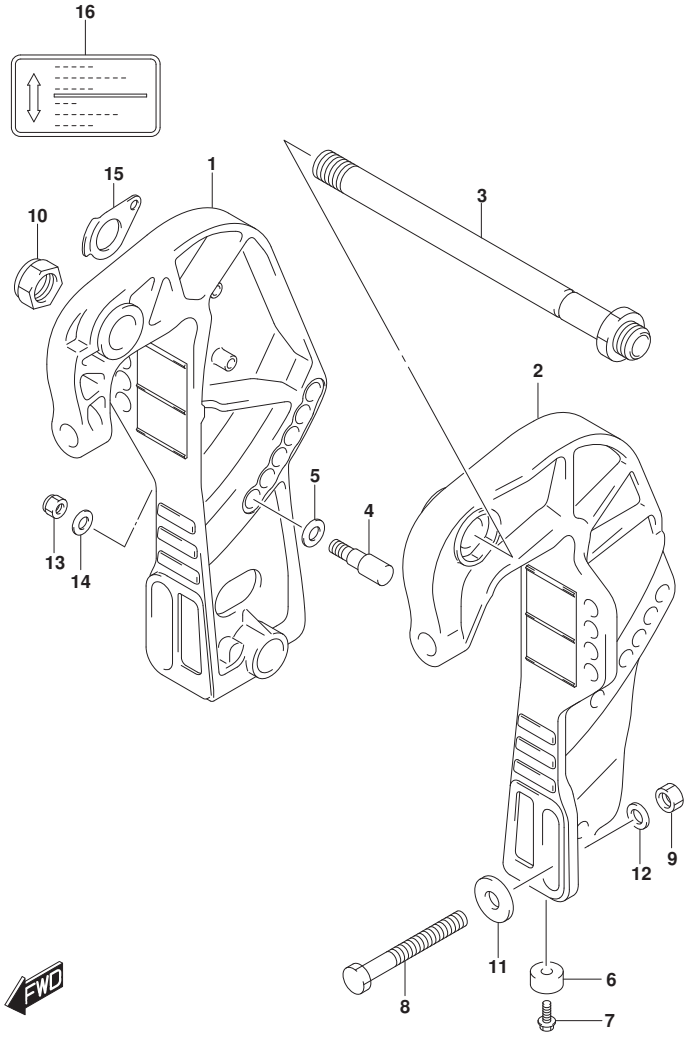

FIG.335B (1-I-9) CLAMP BRACKET (DF40AQH)

REF NO.	PART NO.	DESCRIPTION	Q'TY	REMARKS
1	41111-89J21-YAY	BRACKET, CLAMP STBD (BLACK)	1	
2	41121-89J15-YAY	BRACKET, CLAMP PORT (BLACK)	1	
3	41130-87J11	SHAFT, CLAMP BRACKET	1	
4	45421-89J00	PIN, TILT LOCK	2	
5	09160-12066	WASHER (12.5X22X2.5)	2	
6	55321-87J01	ANODE, PROTECTION	2	
7	09103-06281	BOLT (6X14)	2	
8-1	09100-12093	BOLT (12X100)	4	
8-2	09100-12091	BOLT (12X115)	1	OPT
9	09159-12014	NUT	4	
10	09159-22006	NUT	1	
11	09160-12128	WASHER (12.5X35X3)	4	
12	09160-12126	WASHER (12.5X22X3)	4	
13	09159-10050	NUT	2	
14	09160-10082	WASHER (10.5X19X2)	2	
15	41135-93J00	WASHER, CLAMP BRACKET SHAFT	1	
16	43241-87J00	MARK, RELEASE LEVER	1	

DF40AQH E01

DF60A_E01_018_335B
CLAMP BRACKET

FIG.335C

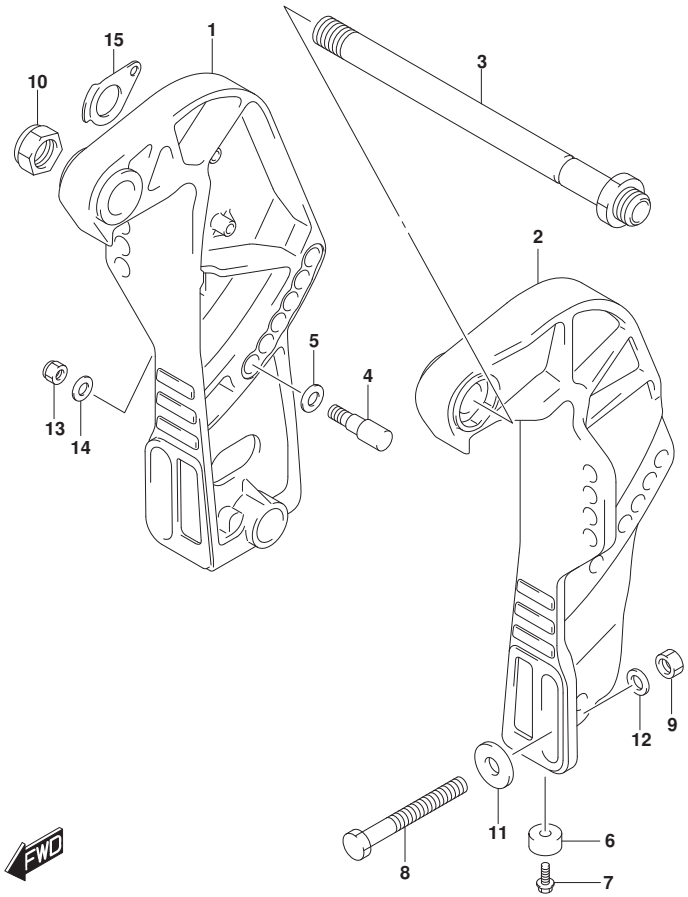

FIG.335C (1-I-10) CLAMP BRACKET (DF40ATH)(DF50ATH)

REF NO.	PART NO.	DESCRIPTION	Q'TY	REMARKS
1	41111-88L20-YAY	BRACKET, CLAMP STBD (BLACK)	1	
2	41121-88L10-YAY	BRACKET, CLAMP PORT (BLACK)	1	
3	41130-87J11	SHAFT, CLAMP BRACKET	1	
4	45421-89J00	PIN, TILT LOCK	2	
5	09160-12066	WASHER (12.5X22X2.5)	2	
6	55321-87J01	ANODE, PROTECTION	2	
7	09103-06281	BOLT (6X14)	2	
8-1	09100-12093	BOLT (12X100)	4	
8-2	09100-12091	BOLT (12X115)	1	OPT
9	09159-12014	NUT	4	
10	09159-22006	NUT	1	
11	09160-12128	WASHER (12.5X35X3)	4	
12	09160-12126	WASHER (12.5X22X3)	4	
13	09159-10050	NUT	2	
14	09160-10082	WASHER (10.5X19X2)	2	
15	41135-93J00	WASHER, CLAMP BRACKET SHAFT	1	

DF40ATH E01
DF50ATH E01

DF60A_E01_018_335C
CLAMP BRACKET

FIG.335D

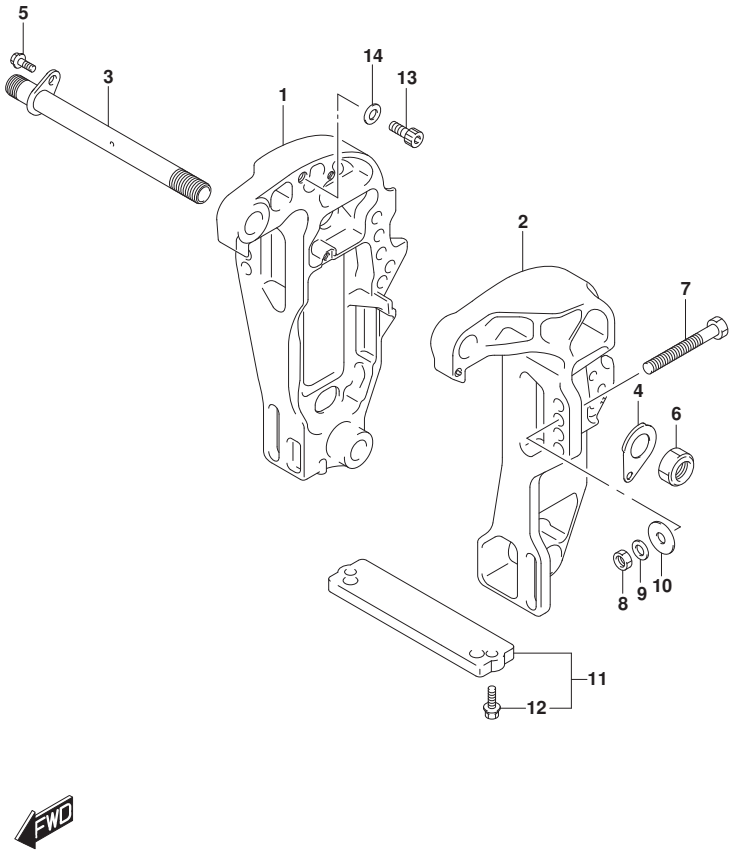

FIG.335D (1-I-11) CLAMP BRACKET (DF40AST)(DF60A)

REF NO.	PART NO.	DESCRIPTION	Q'TY	REMARKS
1-1	41111-88L11-YAY	BRACKET, CLAMP STBD (BLACK)	1	
1-2	41111-88L11-Y5S	BRACKET, CLAMP STBD (WHITE)	1	
2-1	41121-88L01-YAY	BRACKET, CLAMP PORT (BLACK)	1	
2-2	41121-88L01-Y5S	BRACKET, CLAMP PORT (WHITE)	1	
3	41130-88L10	SHAFT, CLAMP BRACKET	1	
4	41135-93J00	WASHER, CLAMP BRACKET SHAFT	1	
5	09116-08137	BOLT (8X22)	1	
6	09159-22006	NUT	1	
7-1	09100-12093	BOLT (12X100)	4	
7-2	09100-12091	BOLT (12X115)	1	OPT
8	09159-12014	NUT	4	
9	09160-12126	WASHER (12.5X22X3)	4	
10	09160-12128	WASHER (12.5X35X3)	4	
11	55320-94900	ZINC, PROTECTION	1	
12	09116-06121	.BOLT (6X25)	2	
13	09106-10065	BOLT (10X20)	2	
14	09160-10082	WASHER (10.5X19X2)	2	

DF40AST E34
DF60A E01
DF60A E40

DF60A_E01_018_335D
CLAMP BRACKET

FIG.335E

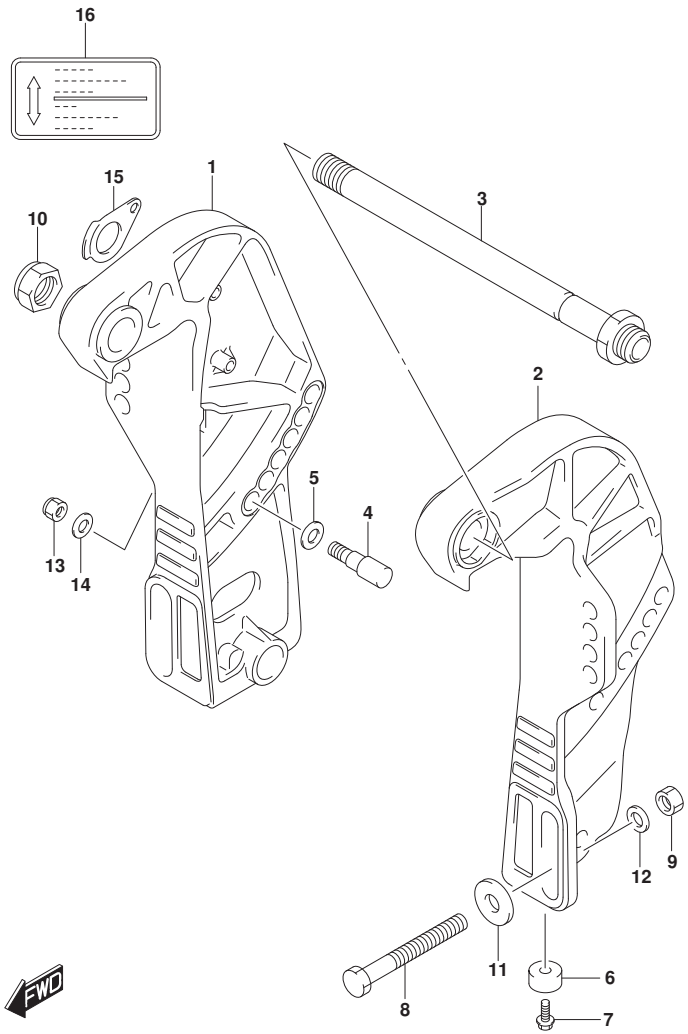

FIG.335E (1-I-12) CLAMP BRACKET (DF60AQH)

REF NO.	PART NO.	DESCRIPTION	Q'TY	REMARKS
1	41111-88L20-YAY	BRACKET, CLAMP STBD (BLACK)	1	
2	41121-88L10-YAY	BRACKET, CLAMP PORT (BLACK)	1	
3	41130-87J11	SHAFT, CLAMP BRACKET	1	
4	45421-89J00	PIN, TILT LOCK	2	
5	09160-12066	WASHER (12.5X22X2.5)	2	
6	55321-87J01	ANODE, PROTECTION	2	
7	09103-06281	BOLT (6X14)	2	
8-1	09100-12093	BOLT (12X100)	4	
8-2	09100-12091	BOLT (12X115)	1	OPT
9	09159-12014	NUT	4	
10	09159-22006	NUT	1	
11	09160-12128	WASHER (12.5X35X3)	4	
12	09160-12126	WASHER (12.5X22X3)	4	
13	09159-10050	NUT	2	
14	09160-10082	WASHER (10.5X19X2)	2	
15	41135-93J00	WASHER, CLAMP BRACKET SHAFT	1	
16	43241-87J00	MARK, RELEASE LEVER	1	

DF60AQH E01
DF60AQH E40

DF60A_E01_018_335E
CLAMP BRACKET

FIG.335F

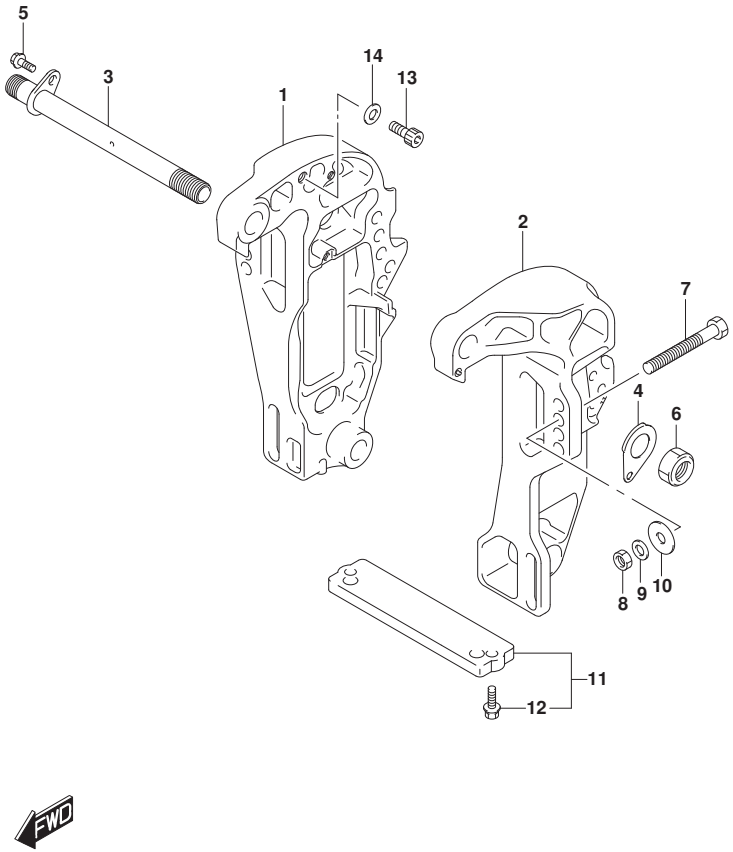

FIG.335F (1-I-13) CLAMP BRACKET (DF60ATH)

REF NO.	PART NO.	DESCRIPTION	Q'TY	REMARKS
1	41111-88L11-YAY	BRACKET, CLAMP STBD (BLACK)	1	
2	41121-88L01-YAY	BRACKET, CLAMP PORT (BLACK)	1	
3	41130-88L10	SHAFT, CLAMP BRACKET	1	
4	41135-93J00	WASHER, CLAMP BRACKET SHAFT	1	
5	09116-08137	BOLT (8X22)	1	
6	09159-22006	NUT	1	
7-1	09100-12093	BOLT (12X100)	4	
7-2	09100-12091	BOLT (12X115)	1	OPT
8	09159-12014	NUT	4	
9	09160-12126	WASHER (12.5X22X3)	4	
10	09160-12128	WASHER (12.5X35X3)	4	
11	55320-94900	ZINC, PROTECTION	1	
12	09116-06121	.BOLT (6X25)	2	
13	09106-10065	BOLT (10X20)	2	
14	09160-10082	WASHER (10.5X19X2)	2	

DF60ATH E01
DF60ATH E40

DF60A_E01_018_335F
CLAMP BRACKET

FIG.335G

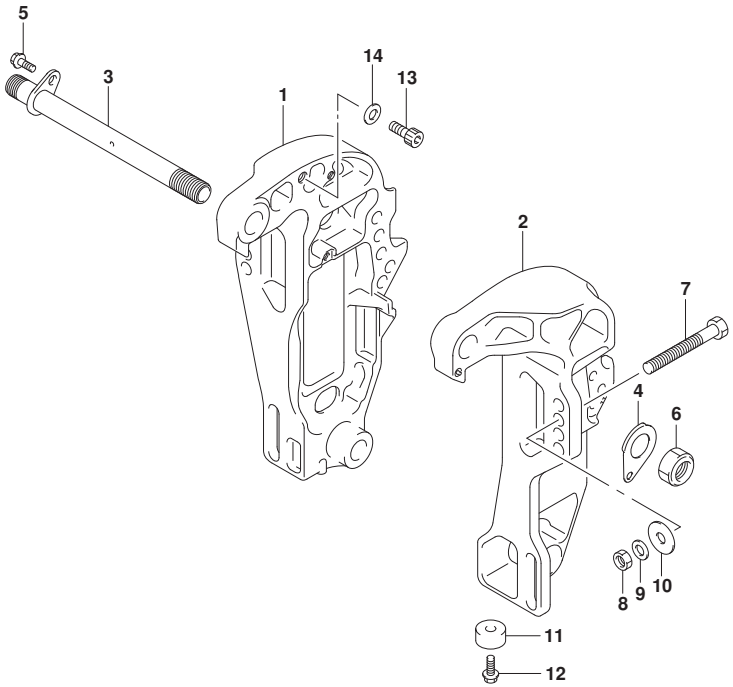

FIG.335G (1-I-14) CLAMP BRACKET (DF50AVT)(DF50AVTH)(DF60AVT)(DF60AVTH)

REF NO.	PART NO.	DESCRIPTION	Q'TY	REMARKS
1	41111-88L11-YAY	BRACKET, CLAMP STBD (BLACK)	1	
2	41121-88L01-YAY	BRACKET, CLAMP PORT (BLACK)	1	
3	41130-88L10	SHAFT, CLAMP BRACKET	1	
4	41135-93J00	WASHER, CLAMP BRACKET SHAFT	1	
5	09116-08137	BOLT (8X22)	1	
6	09159-22006	NUT	1	
7-1	09100-12093	BOLT (12X100)	4	
7-2	09100-12091	BOLT (12X115)	1	OPT
8	09159-12014	NUT	4	
9	09160-12126	WASHER (12.5X22X3)	4	
10	09160-12128	WASHER (12.5X35X3)	4	
11	55321-87J01	ANODE, PROTECTION	2	
12	09103-06281	BOLT (6X14)	2	
13	09106-10065	BOLT (10X20)	2	
14	09160-10082	WASHER (10.5X19X2)	2	

DF50AVT E01
DF50AVTH E01
DF60AVT E01
DF60AVT E40
DF60AVTH E01
DF60AVTH E40

DF60A_E01_018_335G
CLAMP BRACKET

FIG.336A

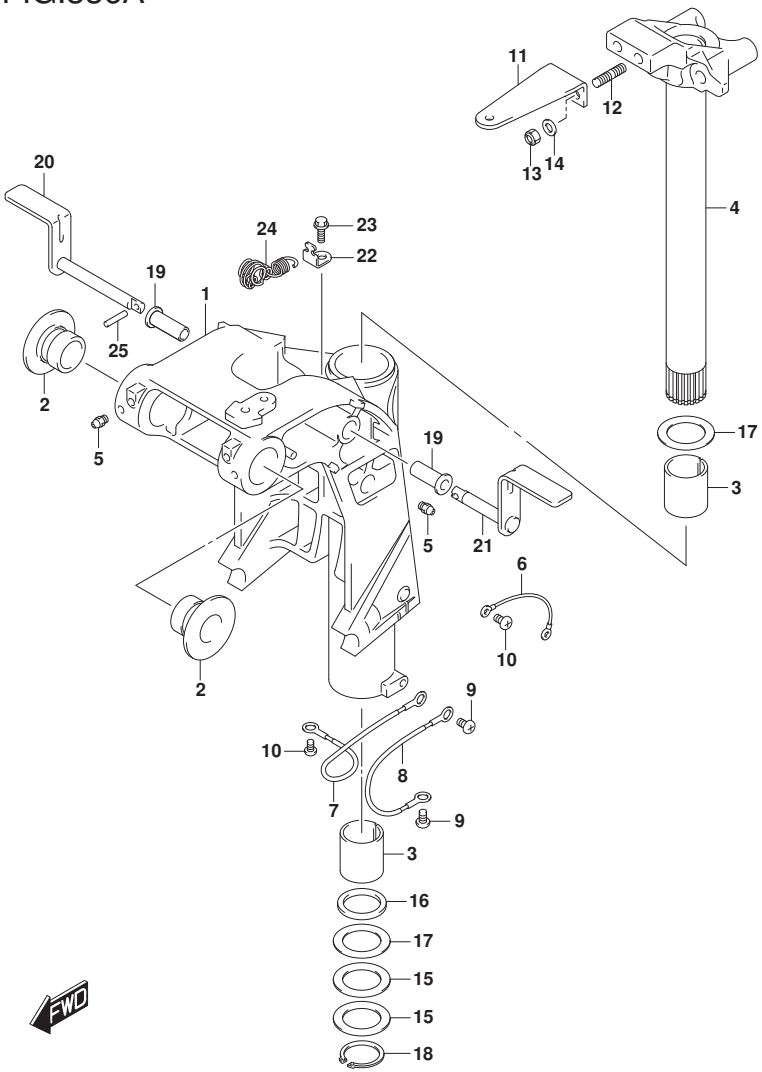

FIG.336A (1-I-15) SWIVEL BRACKET (DF40A E01)(DF50A E01)

REF NO.	PART NO.	DESCRIPTION	Q'TY	REMARKS
1-1	43111-88L31-YAY	BRACKET, SWIVEL (S) (BLACK)	1	W/TRANSOM(S)
1-2	43111-88L31-Y5S	BRACKET, SWIVEL (S) (WHITE)	1	W/TRANSOM(S)
1-3	43111-88L21-YAY	BRACKET, SWIVEL (L) (BLACK)	1	W/TRANSOM(L)
1-4	43111-88L21-Y5S	BRACKET, SWIVEL (L) (WHITE)	1	W/TRANSOM(L)
2	43211-87J00	BUSH, SWIVEL BRACKET	2	
3	43711-89J10	BUSH, STEERING	2	
4-1	43750-88L32-YAY	BRACKET, STEERING (S) (BLACK)	1	W/TRANSOM(S)
4-2	43750-88L32-Y5S	BRACKET, STEERING (S) (WHITE)	1	W/TRANSOM(S)
4-3	43750-88L22-YAY	BRACKET, STEERING (L) (BLACK)	1	W/TRANSOM(L)
4-4	43750-88L22-Y5S	BRACKET, STEERING (L) (WHITE)	1	W/TRANSOM(L)
5	22511-99011	NIPPLE, GREASE	3	
6	36894-95201	LEAD (CLAMP TO SWIVEL)	1	
7	36895-87D01	LEAD (SWIVEL TO MOUNT BRKT)	1	
8	36895-87D01	LEAD (SWIVEL TO HOUSING)	1	
9	09125-06063	SCREW (6X10)	2	
10	09125-05050	SCREW (5X8)	3	
11	43755-88L00	ATTACHMENT, STEERING BRKT	1	
12	09108-10161	STUD BOLT	2	
13	09159-10050	NUT	2	
14	09160-10141	WASHER (10.5X19X2)	2	
15	09160-39003	WASHER (39.5X58X0.3)	2	
16	09282-39001	OIL SEAL (39X51X5)	1	
17	09160-39002	WASHER (39.5X58X1)	2	
18	09380-38003	CIRCLIP	1	
19	41226-97E00	BUSH, TILT LOCK LEVER	2	
20	41270-89J10	LEVER, TILT LOCK STBD	1	
21	41280-89J04	LEVER, TILT LOCK PORT	1	
22	45731-96312	BRACKET, SPRING	1	
23	09116-06236	BOLT (6X16)	1	
24	41230-97E10	SPRING, TILT LOCK	1	
25	09205-03051	SPRING PIN (3X16)	1	

DF40A E01
DF50A E01

DF60A_E01_018_336A
SWIVEL BRACKET

FIG.336B

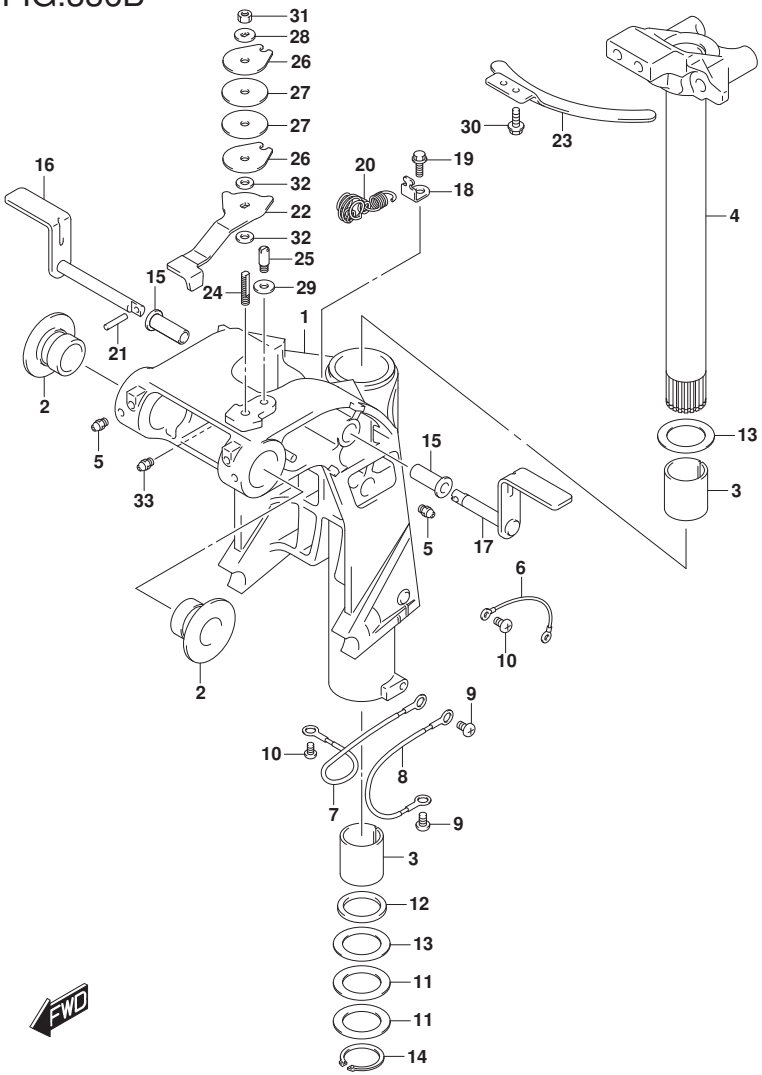

FIG.336B (1-J-2) SWIVEL BRACKET (DF40AQH E01)(DF40ATH E01)(DF50ATH E01)

REF NO.	PART NO.	DESCRIPTION	Q'TY	REMARKS
1	43111-88L21-YAY	BRACKET, SWIVEL (L) (BLACK)	1	
2	43211-87J00	BUSH, SWIVEL BRACKET	2	
3	43711-89J10	BUSH, STEERING	2	
4	43750-88L22-YAY	BRACKET, STEERING (L) (BLACK)	1	
5	22511-99011	NIPPLE, GREASE	3	
6	36894-95201	LEAD (CLAMP TO SWIVEL)	1	
7	36895-87D01	LEAD (SWIVEL TO MOUNT BRKT)	1	
8	36895-87D01	LEAD (SWIVEL TO HOUSING)	1	
9	09125-06063	SCREW (6X10)	2	
10	09125-05050	SCREW (5X8)	3	
11	09160-39003	WASHER (39.5X58X0.3)	2	
12	09282-39001	OIL SEAL (39X51X5)	1	
13	09160-39002	WASHER (39.5X58X1)	2	
14	09380-38003	CIRCLIP	1	
15	41226-97E00	BUSH, TILT LOCK LEVER	2	
16	41270-89J10	LEVER, TILT LOCK STBD	1	
17	41280-89J04	LEVER, TILT LOCK PORT	1	
18	45731-96312	BRACKET, SPRING	1	
19	09116-06236	BOLT (6X16)	1	
20	41230-97E10	SPRING, TILT LOCK	1	
21	09205-03051	SPRING PIN (3X16)	1	
22	43411-88L00	ADJUSTER, STEERING	1	
23	43415-88L00	PLATE, STEERING ADJUSTER	1	
24	43512-88L00	SHAFT, STRG ADJ THREAD	1	
25	43513-88L00	BOLT, STEERING ADJUSTER	1	
26	43514-88L00	PLATE, STRG ADJ FRICTION	2	
27	43515-88L00	WASHER, STRG ADJ FRICTION PLATE	2	

DF60A_E01_018_336B
SWIVEL BRACKET

FIG.336B

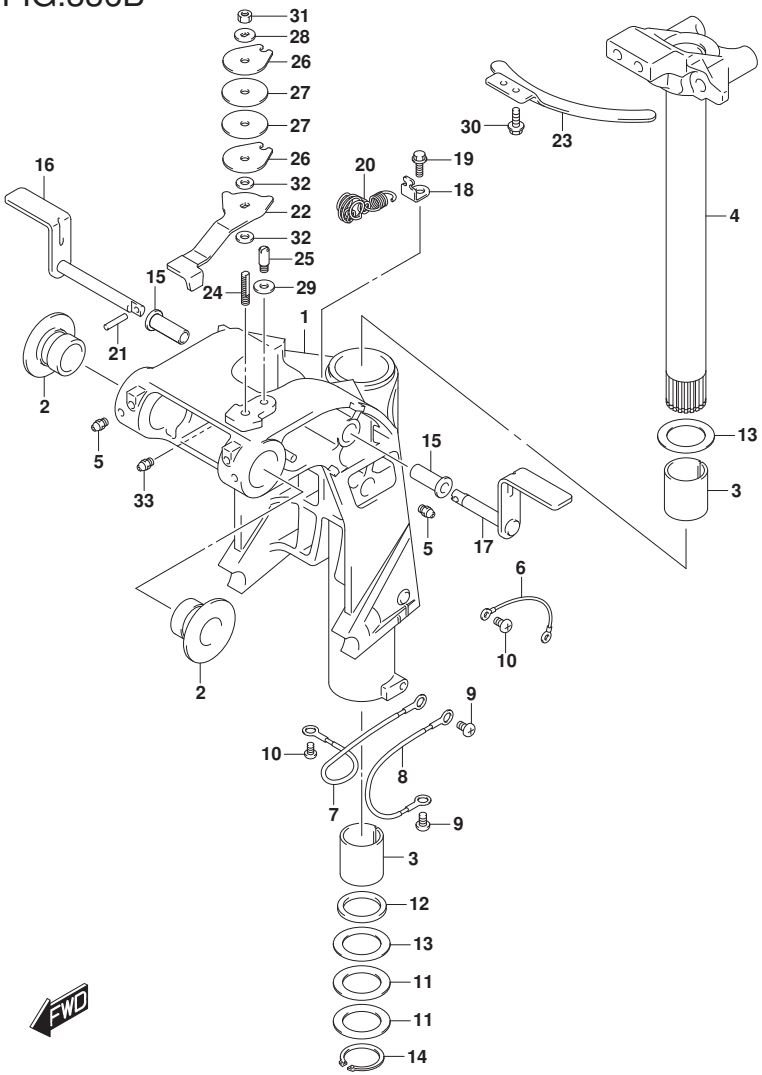

FIG.336B (1-J-3) SWIVEL BRACKET (DF40AQH E01)(DF40ATH E01)(DF50ATH E01)

REF NO.	PART NO.	DESCRIPTION	Q'TY	REMARKS
28	43516-88L00	WASHER, STRG ADJ FRICTION	1	
29	43517-88L00	SPACER, STEERING ADJUSTER	1	
30	09116-06237	BOLT (6X15)	2	
31	09159-08059	NUT	1	
32	09161-08011	WASHER (8.2X18X1.2)	2	
33	22511-99011	NIPPLE, GREASE	1	

DF40AQH E01
DF40ATH E01
DF50ATH E01

DF60A_E01_018_336B
SWIVEL BRACKET

FIG.336C

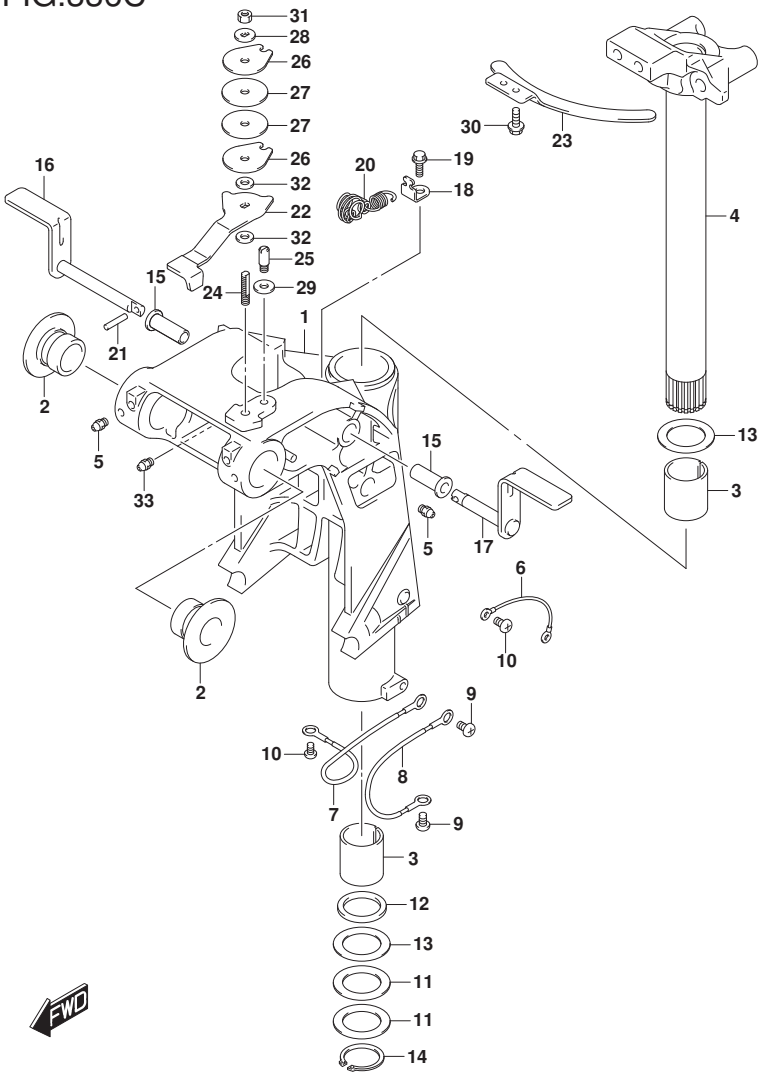

FIG.336C (1-J-4) SWIVEL BRACKET (DF60AQH E01)(DF60AQH E40)

REF NO.	PART NO.	DESCRIPTION	Q'TY	REMARKS
1	43111-88L21-YAY	BRACKET, SWIVEL (L) (BLACK)	1	
2	43211-87J00	BUSH, SWIVEL BRACKET	2	
3	43711-89J10	BUSH, STEERING	2	
4	43750-88L22-YAY	BRACKET, STEERING (L) (BLACK)	1	
5	22511-99011	NIPPLE, GREASE	3	
6	36894-95201	LEAD (CLAMP TO SWIVEL)	1	
7	36895-87D01	LEAD (SWIVEL TO MOUNT BRKT)	1	
8	36895-87D01	LEAD (SWIVEL TO HOUSING)	1	
9	09125-06063	SCREW (6X10)	2	
10	09125-05050	SCREW (5X8)	3	
11	09160-39003	WASHER (39.5X58X0.3)	2	
12	09282-39001	OIL SEAL (39X51X5)	1	
13	09160-39002	WASHER (39.5X58X1)	2	
14	09380-38003	CIRCLIP	1	
15	41226-97E00	BUSH, TILT LOCK LEVER	2	
16	41270-89J10	LEVER, TILT LOCK STBD	1	
17	41280-89J04	LEVER, TILT LOCK PORT	1	
18	45731-96312	BRACKET, SPRING	1	
19	09116-06236	BOLT (6X16)	1	
20	41230-97E10	SPRING, TILT LOCK	1	
21	09205-03051	SPRING PIN (3X16)	1	
22	43411-88L00	ADJUSTER, STEERING	1	
23	43415-88L00	PLATE, STEERING ADJUSTER	1	
24	43512-88L00	SHAFT, STRG ADJ THREAD	1	
25	43513-88L00	BOLT, STEERING ADJUSTER	1	
26	43514-88L00	PLATE, STRG ADJ FRICTION	2	
27	43515-88L00	WASHER, STRG ADJ FRICTION PLATE	2	
28	43516-88L00	WASHER, STRG ADJ FRICTION	1	

DF60A_E01_018_336C
SWIVEL BRACKET

FIG.336C

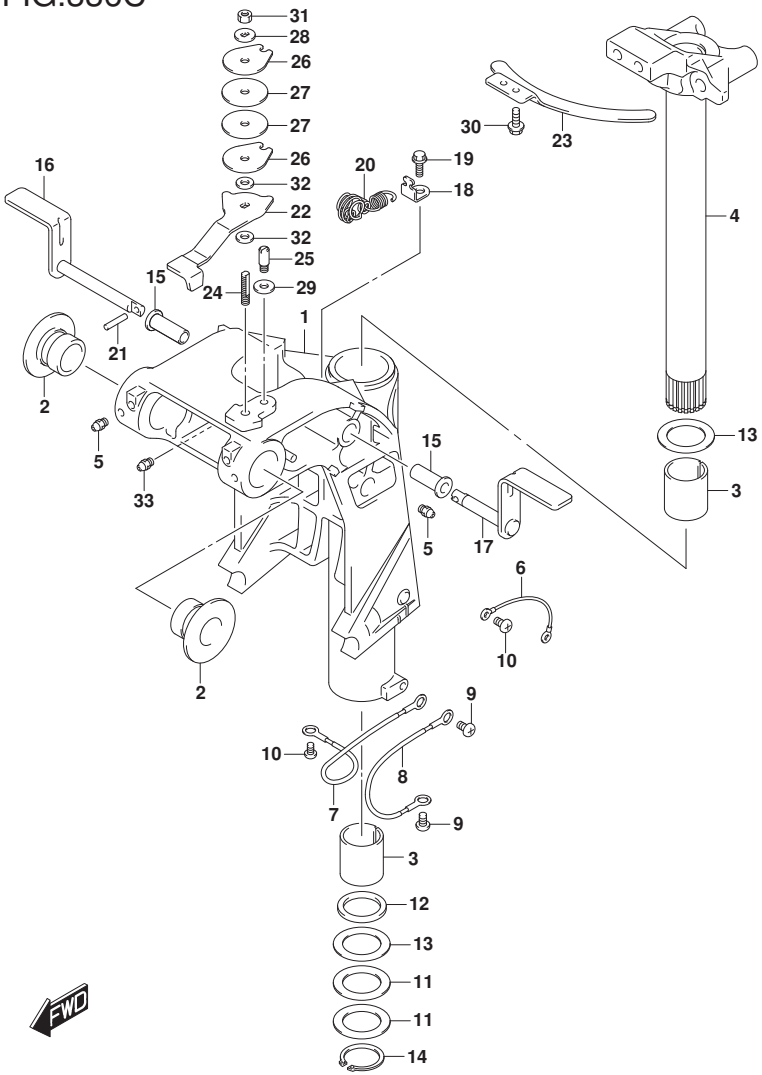

FIG.336C (1-J-5) SWIVEL BRACKET (DF60AQH E01)(DF60AQH E40)

REF NO.	PART NO.	DESCRIPTION	Q'TY	REMARKS
29	43517-88L00	SPACER, STEERING ADJUSTER	1	
30	09116-06237	BOLT (6X15)	2	
31	09159-08059	NUT	1	
32	09161-08011	WASHER (8.2X18X1.2)	2	
33	22511-99011	NIPPLE, GREASE	1	

DF60AQH E01
DF60AQH E40

DF60A_E01_018_336C
SWIVEL BRACKET

FIG.336D

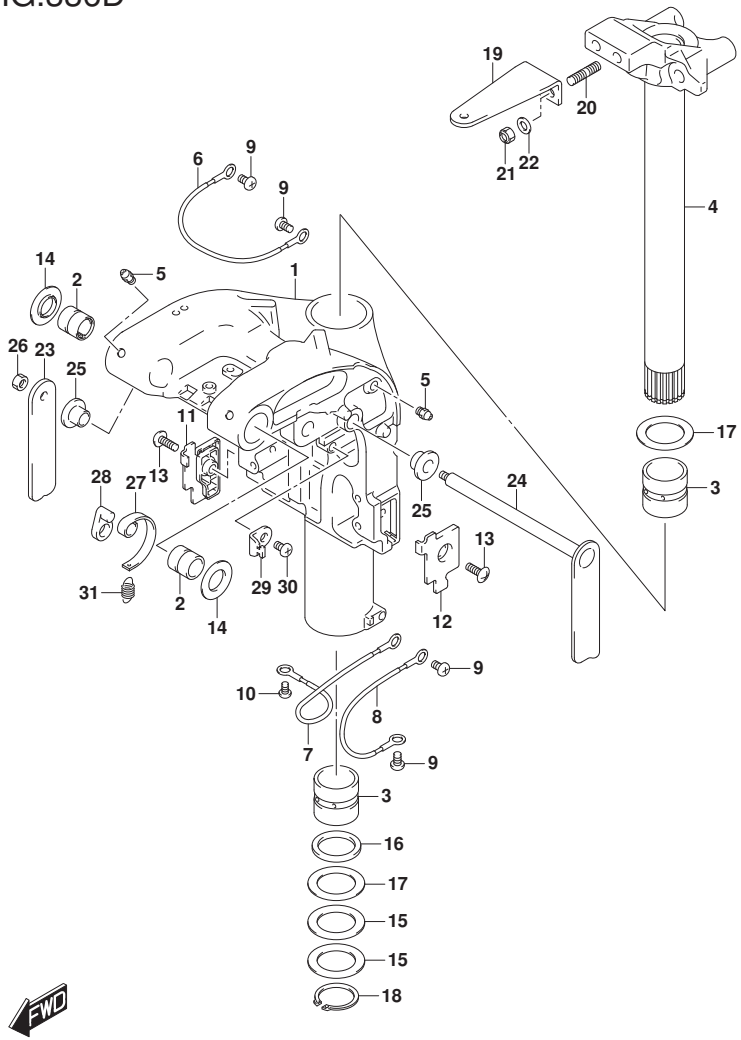

FIG.336D (1-J-6) SWIVEL BRACKET (DF40AST E34)

REF NO.	PART NO.	DESCRIPTION	Q'TY	REMARKS
1-1	43111-88L50-YAY	BRACKET, SWIVEL (S) (BLACK)	1	W/TRANSOM(S)
1-2	43111-88L50-Y5S	BRACKET, SWIVEL (S) (WHITE)	1	W/TRANSOM(S)
1-3	43111-88L40-YAY	BRACKET, SWIVEL (L) (BLACK)	1	W/TRANSOM(L)
1-4	43111-88L40-Y5S	BRACKET, SWIVEL (L) (WHITE)	1	W/TRANSOM(L)
2	43211-88L00	BUSH, SWIVEL BRACKET	2	
3	43711-97E01	BUSH, STEERING	2	
4-1	43750-88L32-YAY	BRACKET, STEERING (S) (BLACK)	1	W/TRANSOM(S)
4-2	43750-88L32-Y5S	BRACKET, STEERING (S) (WHITE)	1	W/TRANSOM(S)
4-3	43750-88L22-YAY	BRACKET, STEERING (L) (BLACK)	1	W/TRANSOM(L)
4-4	43750-88L22-Y5S	BRACKET, STEERING (L) (WHITE)	1	W/TRANSOM(L)
5	22511-99011	NIPPLE, GREASE	4	
6	36894-87D00	LEAD (CLAMP TO SWIVEL)	1	
7	36895-87D01	LEAD (SWIVEL TO MOUNT BRKT)	1	
8	36895-87D01	LEAD (SWIVEL TO HOUSING)	1	
9	09125-06063	SCREW (6X10)	4	
10	09125-05050	SCREW (5X8)	1	
11	43119-88L00	PLATE, SWIVEL BRKT LOWER STBD	1	
12	43119-88L10	PLATE, SWIVEL BRKT LOWER PORT	1	
13	09125-06067	SCREW (6X16)	2	
14	43114-88L00	WASHER, SWIVEL TO CLAMP BRKT	2	
15	09160-39003	WASHER (39.5X58X0.3)	2	
16	09282-39001	OIL SEAL (39X51X5)	1	
17	09160-39002	WASHER (39.5X58X1)	2	
18	09380-38003	CIRCLIP	1	
19	43755-88L00	ATTACHMENT, STEERING BRKT	1	
20	09108-10161	STUD BOLT	2	
21	09159-10050	NUT	2	
22	09160-10141	WASHER (10.5X19X2)	2	
23	41221-88L00	LEVER, TILT LOCK STBD	1	
24	41280-88L10	LEVER, TILT LOCK PORT	1	

FIG.336D

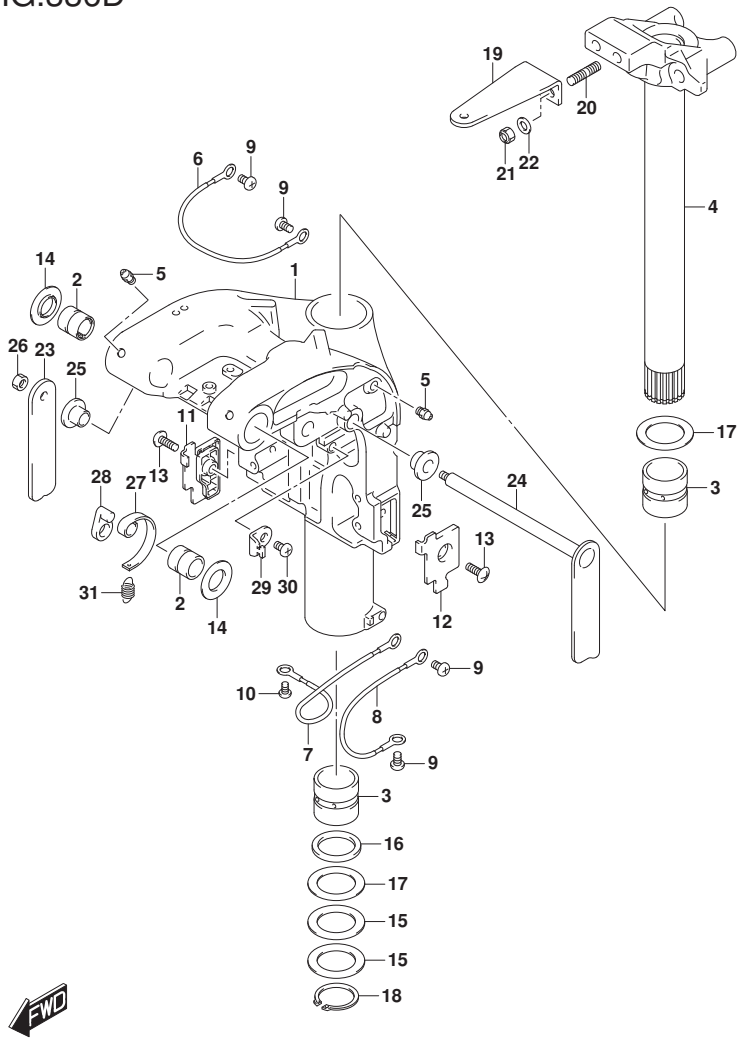

FIG.336D (1-J-7) SWIVEL BRACKET (DF40AST E34)

REF NO.	PART NO.	DESCRIPTION	Q'TY	REMARKS
25	41224-88L00	BUSH, TILT LOCK LEVER	2	
26	29141-93J00	NUT, TILT LOCK LEVER STBD	1	
27	41231-88L01	LINK, TILT LOCK LEVER	1	
28	41234-88L00	ARM, TILT LOCK LINK	1	
29	45731-96312	BRACKET, SPRING	1	
30	09125-06063	SCREW (6X10)	1	
31	09443-10043	SPRING	1	

DF40AST E34

FIG.336E

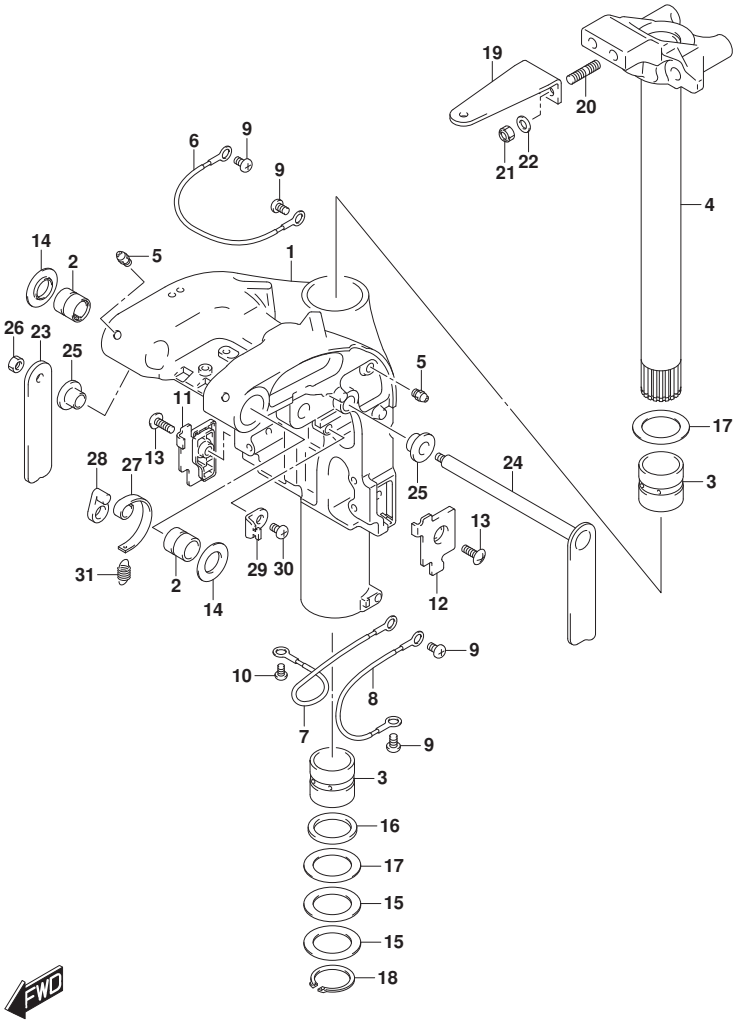

FIG.336E (1-J-8) SWIVEL BRACKET (DF60A E01)

REF NO.	PART NO.	DESCRIPTION	Q'TY	REMARKS
1-1	43111-88L50-YAY	BRACKET, SWIVEL (S) (BLACK)	1	W/TRANSOM(S)
1-2	43111-88L50-Y5S	BRACKET, SWIVEL (S) (WHITE)	1	W/TRANSOM(S)
1-3	43111-88L40-YAY	BRACKET, SWIVEL (L) (BLACK)	1	W/TRANSOM(L) W/TRANSOM(X)
1-4	43111-88L40-Y5S	BRACKET, SWIVEL (L) (WHITE)	1	W/TRANSOM(L) W/TRANSOM(X)
2	43211-88L00	BUSH, SWIVEL BRACKET	2	
3	43711-97E01	BUSH, STEERING	2	
4-1	43750-88L32-YAY	BRACKET, STEERING (S) (BLACK)	1	W/TRANSOM(S)
4-2	43750-88L32-Y5S	BRACKET, STEERING (S) (WHITE)	1	W/TRANSOM(S)
4-3	43750-88L22-YAY	BRACKET, STEERING (L) (BLACK)	1	W/TRANSOM(L) W/TRANSOM(X)
4-4	43750-88L22-Y5S	BRACKET, STEERING (L) (WHITE)	1	W/TRANSOM(L) W/TRANSOM(X)
5	22511-99011	NIPPLE, GREASE	4	
6	36894-87D00	LEAD (CLAMP TO SWIVEL)	1	
7	36895-87D01	LEAD (SWIVEL TO MOUNT BRKT)	1	
8	36895-87D01	LEAD (SWIVEL TO HOUSING)	1	
9	09125-06063	SCREW (6X10)	4	
10	09125-05050	SCREW (5X8)	1	
11	43119-88L00	PLATE, SWIVEL BRKT LOWER STBD	1	
12	43119-88L10	PLATE, SWIVEL BRKT LOWER PORT	1	
13	09125-06067	SCREW (6X16)	2	
14	43114-88L00	WASHER, SWIVEL TO CLAMP BRKT	2	
15	09160-39003	WASHER (39.5X58X0.3)	2	
16	09282-39001	OIL SEAL (39X51X5)	1	
17	09160-39002	WASHER (39.5X58X1)	2	
18	09380-38003	CIRCLIP	1	
19	43755-88L00	ATTACHMENT, STEERING BRKT	1	
20	09108-10161	STUD BOLT	2	
21	09159-10050	NUT	2	
22	09160-10141	WASHER (10.5X19X2)	2	

FIG.336E

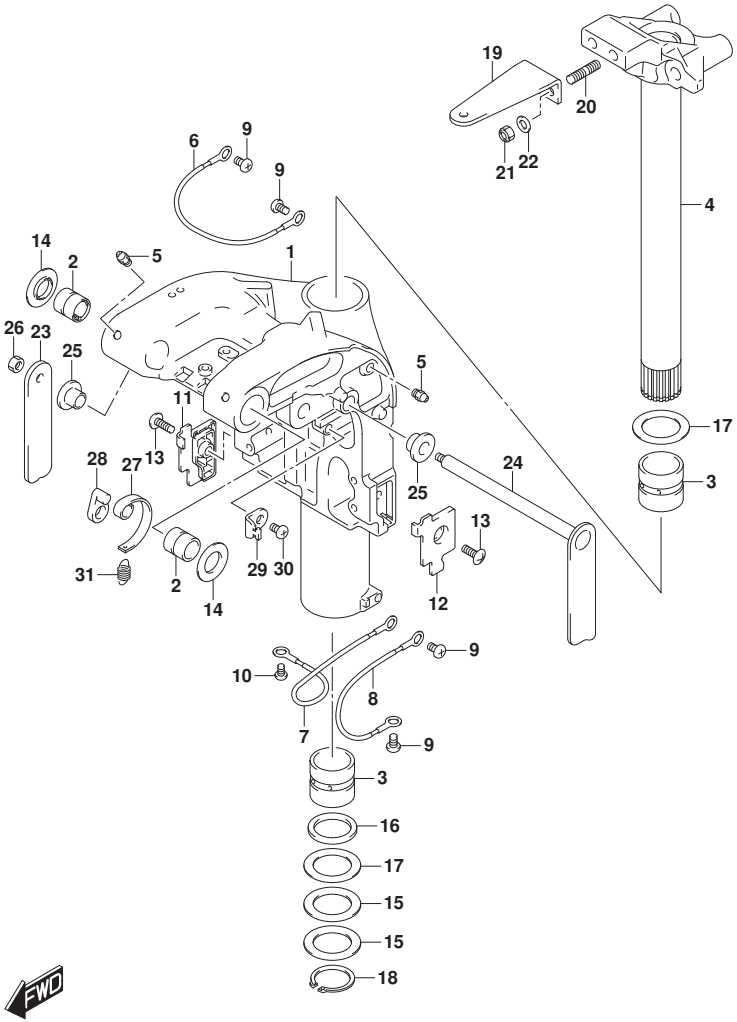

FIG.336E (1-J-9) SWIVEL BRACKET (DF60A E01)

REF NO.	PART NO.	DESCRIPTION	Q'TY	REMARKS
23	41221-88L00	LEVER, TILT LOCK STBD	1	
24	41280-88L10	LEVER, TILT LOCK PORT	1	
25	41224-88L00	BUSH, TILT LOCK LEVER	2	
26	29141-93J00	NUT, TILT LOCK LEVER STBD	1	
27	41231-88L01	LINK, TILT LOCK LEVER	1	
28	41234-88L00	ARM, TILT LOCK LINK	1	
29	45731-96312	BRACKET, SPRING	1	
30	09125-06063	SCREW (6X10)	1	
31	09443-10043	SPRING	1	

DF60A E01

FIG.336F

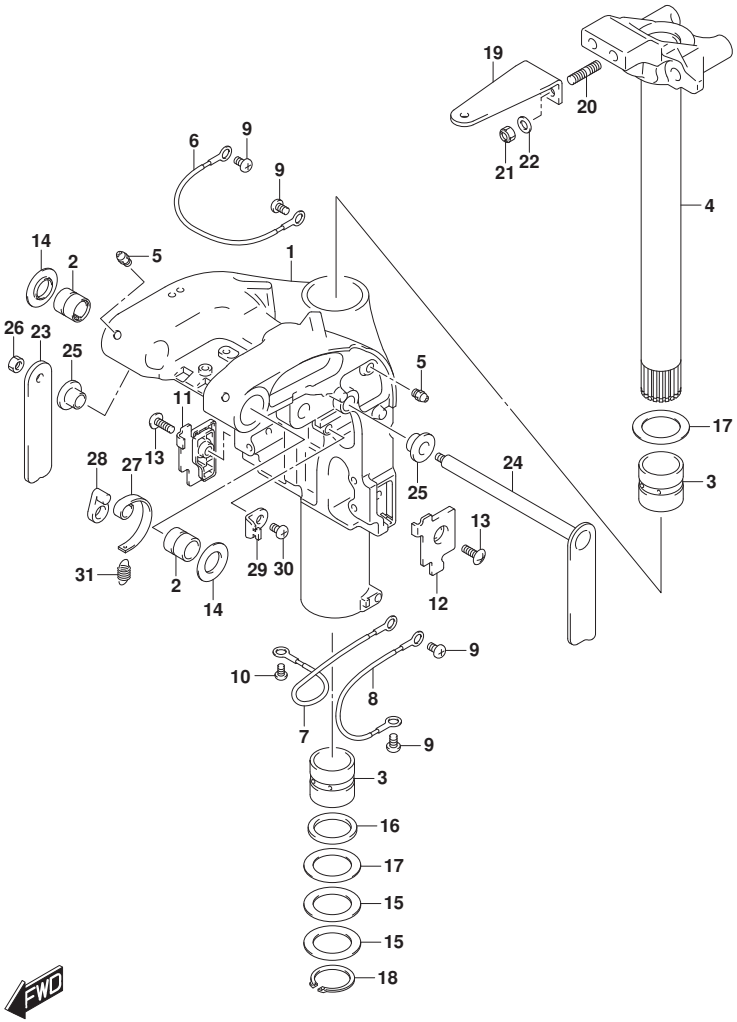

FIG.336F (1-J-10) SWIVEL BRACKET (DF60A E40)

REF NO.	PART NO.	DESCRIPTION	Q'TY	REMARKS
1-1	43111-88L40-YAY	BRACKET, SWIVEL (L) (BLACK)	1	
1-2	43111-88L40-Y5S	BRACKET, SWIVEL (L) (WHITE)	1	
2	43211-88L00	BUSH, SWIVEL BRACKET	2	
3	43711-97E01	BUSH, STEERING	2	
4-1	43750-88L22-YAY	BRACKET, STEERING (L) (BLACK)	1	
4-2	43750-88L22-Y5S	BRACKET, STEERING (L) (WHITE)	1	
5	22511-99011	NIPPLE, GREASE	4	
6	36894-87D00	LEAD (CLAMP TO SWIVEL)	1	
7	36895-87D01	LEAD (SWIVEL TO MOUNT BRKT)	1	
8	36895-87D01	LEAD (SWIVEL TO HOUSING)	1	
9	09125-06063	SCREW (6X10)	4	
10	09125-05050	SCREW (5X8)	1	
11	43119-88L00	PLATE, SWIVEL BRKT LOWER STBD	1	
12	43119-88L10	PLATE, SWIVEL BRKT LOWER PORT	1	
13	09125-06067	SCREW (6X16)	2	
14	43114-88L00	WASHER, SWIVEL TO CLAMP BRKT	2	
15	09160-39003	WASHER (39.5X58X0.3)	2	
16	09282-39001	OIL SEAL (39X51X5)	1	
17	09160-39002	WASHER (39.5X58X1)	2	
18	09380-38003	CIRCLIP	1	
19	43755-88L00	ATTACHMENT, STEERING BRKT	1	
20	09108-10161	STUD BOLT	2	
21	09159-10050	NUT	2	
22	09160-10141	WASHER (10.5X19X2)	2	
23	41221-88L00	LEVER, TILT LOCK STBD	1	
24	41280-88L10	LEVER, TILT LOCK PORT	1	
25	41224-88L00	BUSH, TILT LOCK LEVER	2	
26	29141-93J00	NUT, TILT LOCK LEVER STBD	1	
27	41231-88L01	LINK, TILT LOCK LEVER	1	
28	41234-88L00	ARM, TILT LOCK LINK	1	

FIG.336F

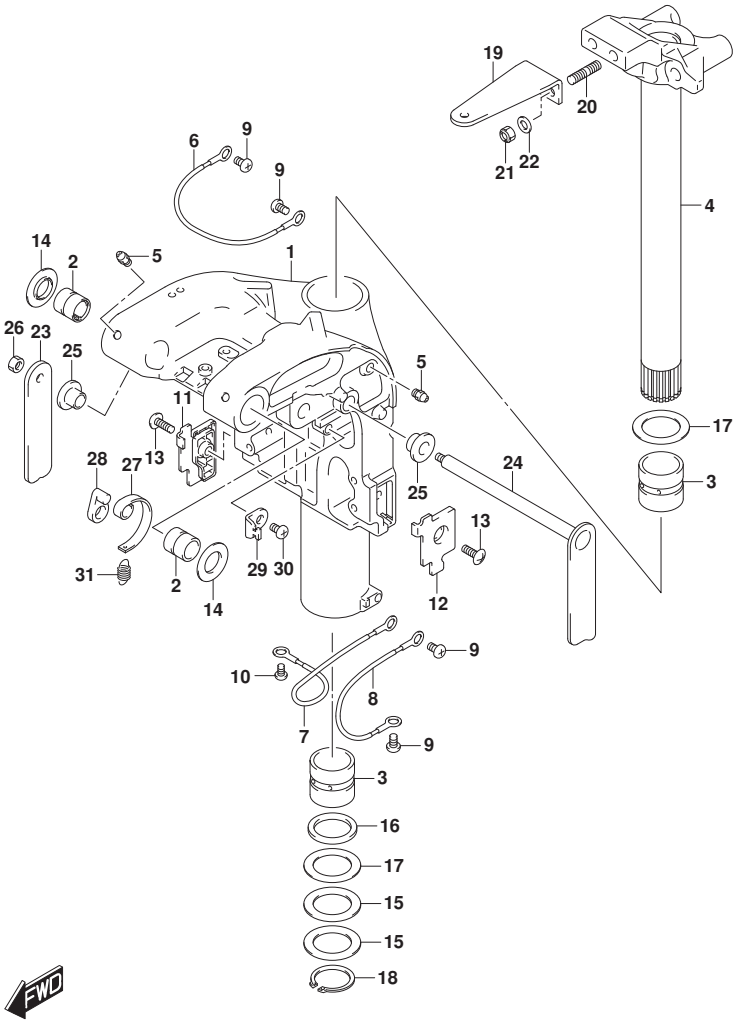

FIG.336F (1-J-11) SWIVEL BRACKET (DF60A E40)

REF NO.	PART NO.	DESCRIPTION	Q'TY	REMARKS
29	45731-96312	BRACKET, SPRING	1	
30	09125-06063	SCREW (6X10)	1	
31	09443-10043	SPRING	1	

DF60A E40

FIG.336G

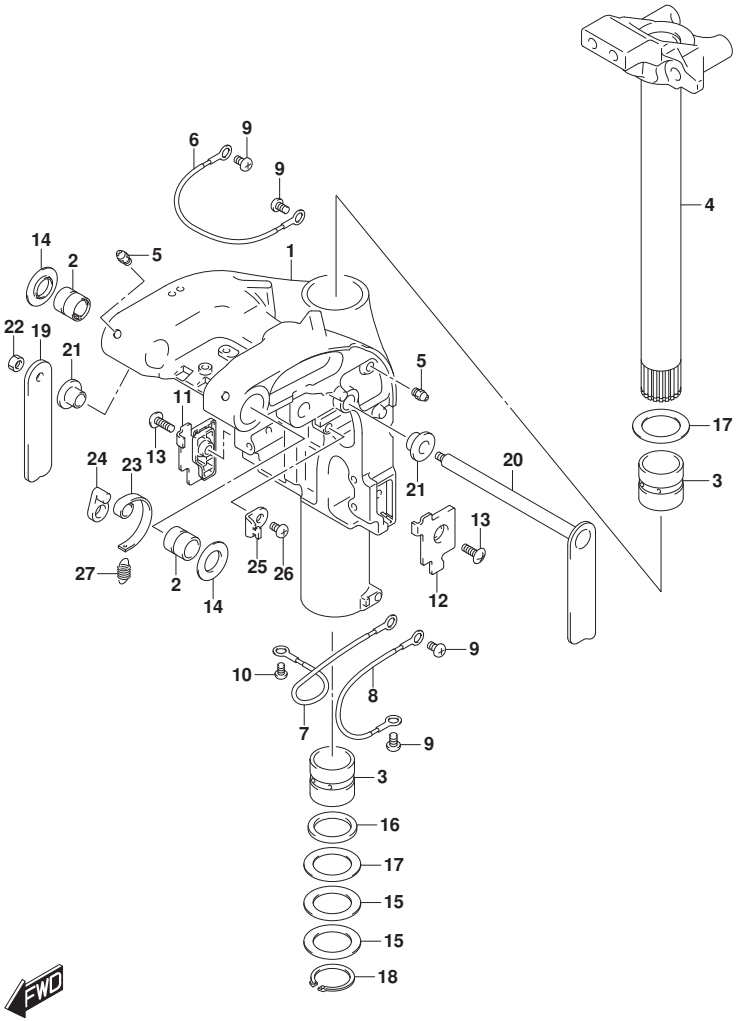

FIG.336G (1-J-12) SWIVEL BRACKET (DF60ATH E01)(DF60ATH E40)

REF NO.	PART NO.	DESCRIPTION	Q'TY	REMARKS
1	43111-88L40-YAY	BRACKET, SWIVEL (L) (BLACK)	1	
2	43211-88L00	BUSH, SWIVEL BRACKET	2	
3	43711-97E01	BUSH, STEERING	2	
4	43750-88L22-YAY	BRACKET, STEERING (L) (BLACK)	1	
5	22511-99011	NIPPLE, GREASE	4	
6	36894-87D00	LEAD (CLAMP TO SWIVEL)	1	
7	36895-87D01	LEAD (SWIVEL TO MOUNT BRKT)	1	
8	36895-87D01	LEAD (SWIVEL TO HOUSING)	1	
9	09125-06063	SCREW (6X10)	4	
10	09125-05050	SCREW (5X8)	1	
11	43119-88L00	PLATE, SWIVEL BRKT LOWER STBD	1	
12	43119-88L10	PLATE, SWIVEL BRKT LOWER PORT	1	
13	09125-06067	SCREW (6X16)	2	
14	43114-88L00	WASHER, SWIVEL TO CLAMP BRKT	2	
15	09160-39003	WASHER (39.5X58X0.3)	2	
16	09282-39001	OIL SEAL (39X51X5)	1	
17	09160-39002	WASHER (39.5X58X1)	2	
18	09380-38003	CIRCLIP	1	
19	41221-88L00	LEVER, TILT LOCK STBD	1	
20	41280-88L10	LEVER, TILT LOCK PORT	1	
21	41224-88L00	BUSH, TILT LOCK LEVER	2	
22	29141-93J00	NUT, TILT LOCK LEVER STBD	1	
23	41231-88L01	LINK, TILT LOCK LEVER	1	
24	41234-88L00	ARM, TILT LOCK LINK	1	
25	45731-96312	BRACKET, SPRING	1	
26	09125-06063	SCREW (6X10)	1	
27	09443-10043	SPRING	1	

DF60ATH E01
DF60ATH E40

FIG.336H

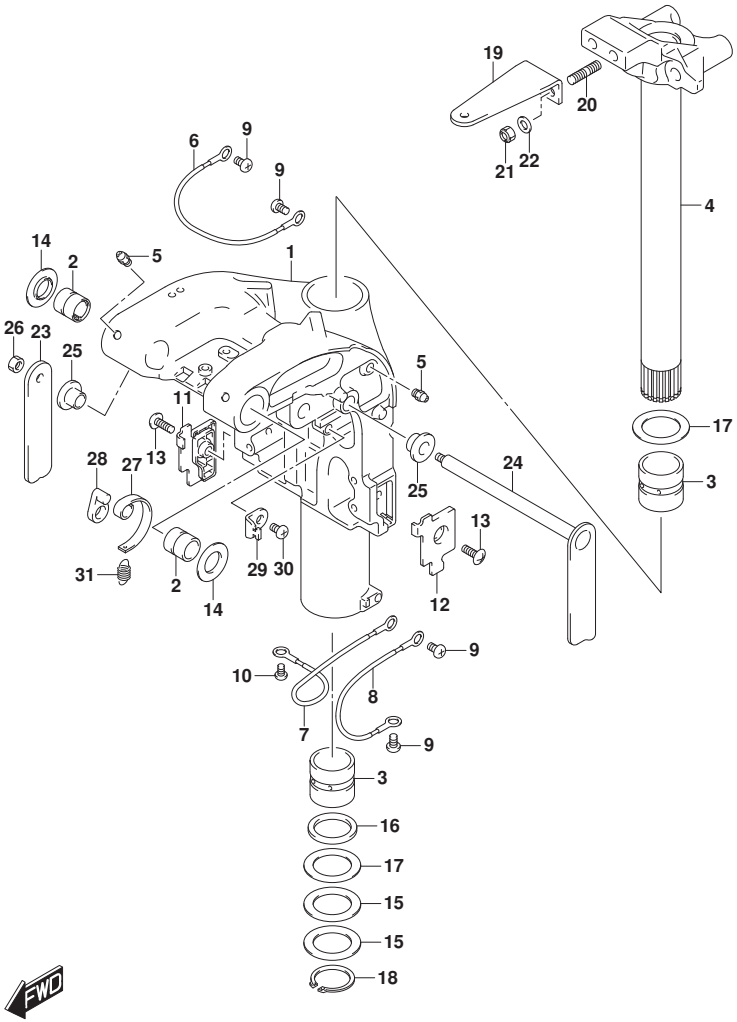

FIG.336H (1-J-13) SWIVEL BRACKET (DF50AVT E01)

REF NO.	PART NO.	DESCRIPTION	Q'TY	REMARKS
1	43111-88L50-YAY	BRACKET, SWIVEL (S) (BLACK)	1	
2	43211-88L00	BUSH, SWIVEL BRACKET	2	
3	43711-97E01	BUSH, STEERING	2	
4	43750-88L32-YAY	BRACKET, STEERING (S) (BLACK)	1	
5	22511-99011	NIPPLE, GREASE	4	
6	36894-87D00	LEAD (CLAMP TO SWIVEL)	1	
7	36895-87D01	LEAD (SWIVEL TO MOUNT BRKT)	1	
8	36895-87D01	LEAD (SWIVEL TO HOUSING)	1	
9	09125-06063	SCREW (6X10)	4	
10	09125-05050	SCREW (5X8)	1	
11	43119-88L00	PLATE, SWIVEL BRKT LOWER STBD	1	
12	43119-88L10	PLATE, SWIVEL BRKT LOWER PORT	1	
13	09125-06067	SCREW (6X16)	2	
14	43114-88L00	WASHER, SWIVEL TO CLAMP BRKT	2	
15	09160-39003	WASHER (39.5X58X0.3)	2	
16	09282-39001	OIL SEAL (39X51X5)	1	
17	09160-39002	WASHER (39.5X58X1)	2	
18	09380-38003	CIRCLIP	1	
19	43755-88L00	ATTACHMENT, STEERING BRKT	1	
20	09108-10161	STUD BOLT	2	
21	09159-10050	NUT	2	
22	09160-10141	WASHER (10.5X19X2)	2	
23	41221-88L00	LEVER, TILT LOCK STBD	1	
24	41280-88L10	LEVER, TILT LOCK PORT	1	
25	41224-88L00	BUSH, TILT LOCK LEVER	2	
26	29141-93J00	NUT, TILT LOCK LEVER STBD	1	
27	41231-88L01	LINK, TILT LOCK LEVER	1	
28	41234-88L00	ARM, TILT LOCK LINK	1	
29	45731-96312	BRACKET, SPRING	1	
30	09125-06063	SCREW (6X10)	1	
31	09443-10043	SPRING	1	

DF50AVT E01

FIG.336J

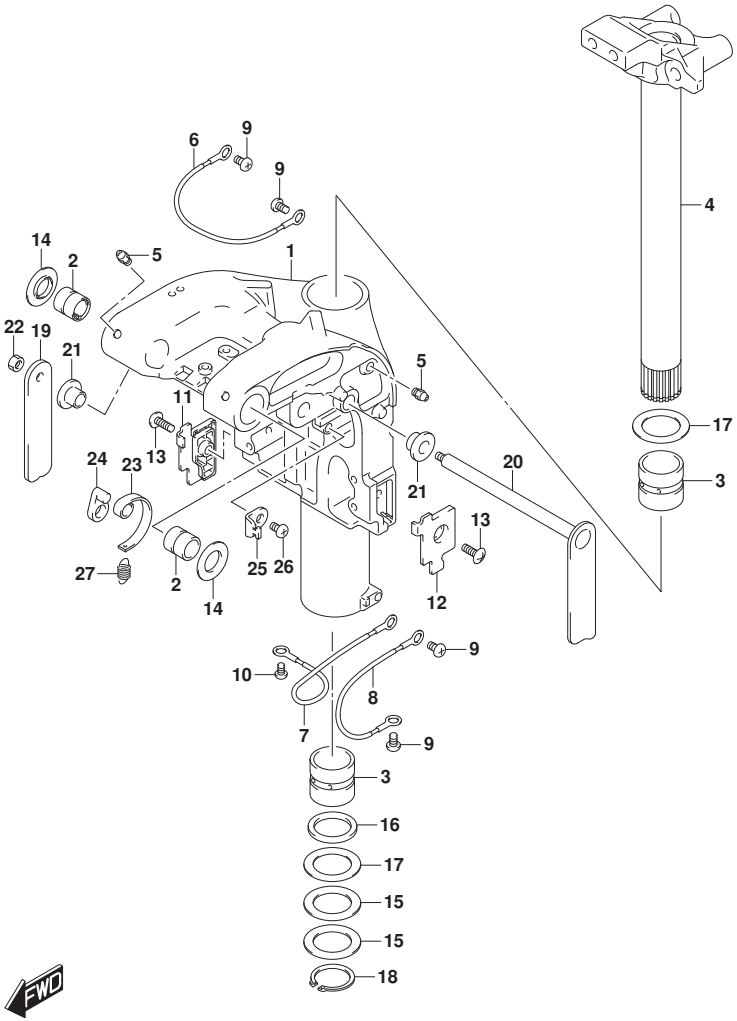

FIG.336J (1-J-14) SWIVEL BRACKET (DF50AVTH E01)

REF NO.	PART NO.	DESCRIPTION	Q'TY	REMARKS
1	43111-88L50-YAY	BRACKET, SWIVEL (S) (BLACK)	1	
2	43211-88L00	BUSH, SWIVEL BRACKET	2	
3	43711-97E01	BUSH, STEERING	2	
4	43750-88L32-YAY	BRACKET, STEERING (S) (BLACK)	1	
5	22511-99011	NIPPLE, GREASE	4	
6	36894-87D00	LEAD (CLAMP TO SWIVEL)	1	
7	36895-87D01	LEAD (SWIVEL TO MOUNT BRKT)	1	
8	36895-87D01	LEAD (SWIVEL TO HOUSING)	1	
9	09125-06063	SCREW (6X10)	4	
10	09125-05050	SCREW (5X8)	1	
11	43119-88L00	PLATE, SWIVEL BRKT LOWER STBD	1	
12	43119-88L10	PLATE, SWIVEL BRKT LOWER PORT	1	
13	09125-06067	SCREW (6X16)	2	
14	43114-88L00	WASHER, SWIVEL TO CLAMP BRKT	2	
15	09160-39003	WASHER (39.5X58X0.3)	2	
16	09282-39001	OIL SEAL (39X51X5)	1	
17	09160-39002	WASHER (39.5X58X1)	2	
18	09380-38003	CIRCLIP	1	
19	41221-88L00	LEVER, TILT LOCK STBD	1	
20	41280-88L10	LEVER, TILT LOCK PORT	1	
21	41224-88L00	BUSH, TILT LOCK LEVER	2	
22	29141-93J00	NUT, TILT LOCK LEVER STBD	1	
23	41231-88L01	LINK, TILT LOCK LEVER	1	
24	41234-88L00	ARM, TILT LOCK LINK	1	
25	45731-96312	BRACKET, SPRING	1	
26	09125-06063	SCREW (6X10)	1	
27	09443-10043	SPRING	1	

DF50AVTH E01

FIG.336K

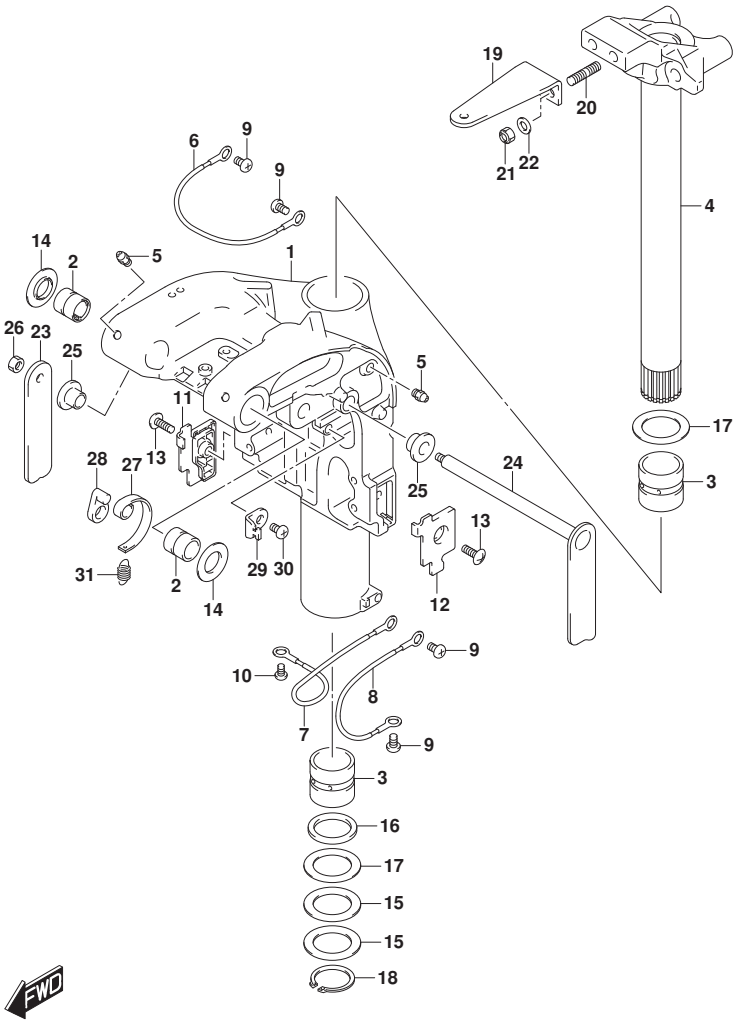

FIG.336K (1-J-15) SWIVEL BRACKET (DF60AVT E01)(DF60AVT E40)

REF NO.	PART NO.	DESCRIPTION	Q'TY	REMARKS
1-1	43111-88L50-YAY	BRACKET, SWIVEL (S) (BLACK)	1	W/TRANSOM(L)
1-2	43111-88L40-YAY	BRACKET, SWIVEL (L) (BLACK)	1	W/TRANSOM(X)
2	43211-88L00	BUSH, SWIVEL BRACKET	2	
3	43711-97E01	BUSH, STEERING	2	
4-1	43750-88L32-YAY	BRACKET, STEERING (S) (BLACK)	1	W/TRANSOM(L)
4-2	43750-88L22-YAY	BRACKET, STEERING (L) (BLACK)	1	W/TRANSOM(X)
5	22511-99011	NIPPLE, GREASE	4	
6	36894-87D00	LEAD (CLAMP TO SWIVEL)	1	
7	36895-87D01	LEAD (SWIVEL TO MOUNT BRKT)	1	
8	36895-87D01	LEAD (SWIVEL TO HOUSING)	1	
9	09125-06063	SCREW (6X10)	4	
10	09125-05050	SCREW (5X8)	1	
11	43119-88L00	PLATE, SWIVEL BRKT LOWER STBD	1	
12	43119-88L10	PLATE, SWIVEL BRKT LOWER PORT	1	
13	09125-06067	SCREW (6X16)	2	
14	43114-88L00	WASHER, SWIVEL TO CLAMP BRKT	2	
15	09160-39003	WASHER (39.5X58X0.3)	2	
16	09282-39001	OIL SEAL (39X51X5)	1	
17	09160-39002	WASHER (39.5X58X1)	2	
18	09380-38003	CIRCLIP	1	
19	43755-88L00	ATTACHMENT, STEERING BRKT	1	
20	09108-10161	STUD BOLT	2	
21	09159-10050	NUT	2	
22	09160-10141	WASHER (10.5X19X2)	2	
23	41221-88L00	LEVER, TILT LOCK STBD	1	
24	41280-88L10	LEVER, TILT LOCK PORT	1	
25	41224-88L00	BUSH, TILT LOCK LEVER	2	
26	29141-93J00	NUT, TILT LOCK LEVER STBD	1	
27	41231-88L01	LINK, TILT LOCK LEVER	1	

FIG.336K

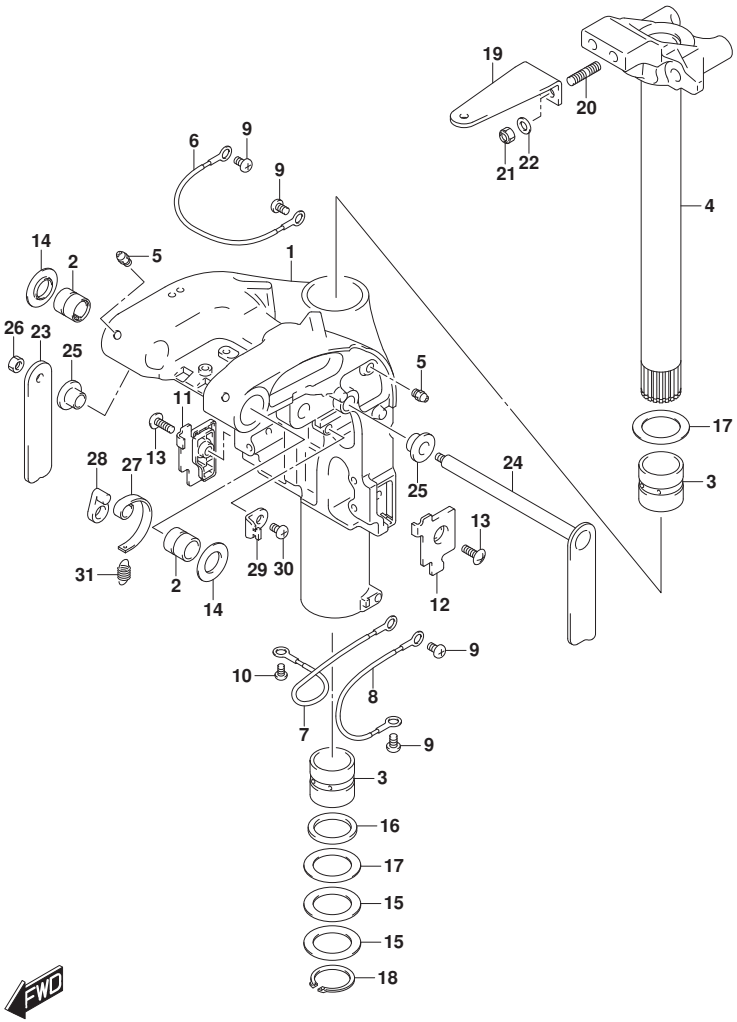

FIG.336K (1-K-2) SWIVEL BRACKET (DF60AVT E01)(DF60AVT E40)

REF NO.	PART NO.	DESCRIPTION	Q'TY	REMARKS
28	41234-88L00	ARM, TILT LOCK LINK	1	
29	45731-96312	BRACKET, SPRING	1	
30	09125-06063	SCREW (6X10)	1	
31	09443-10043	SPRING	1	

DF60AVT E01
DF60AVT E40

FIG.336L

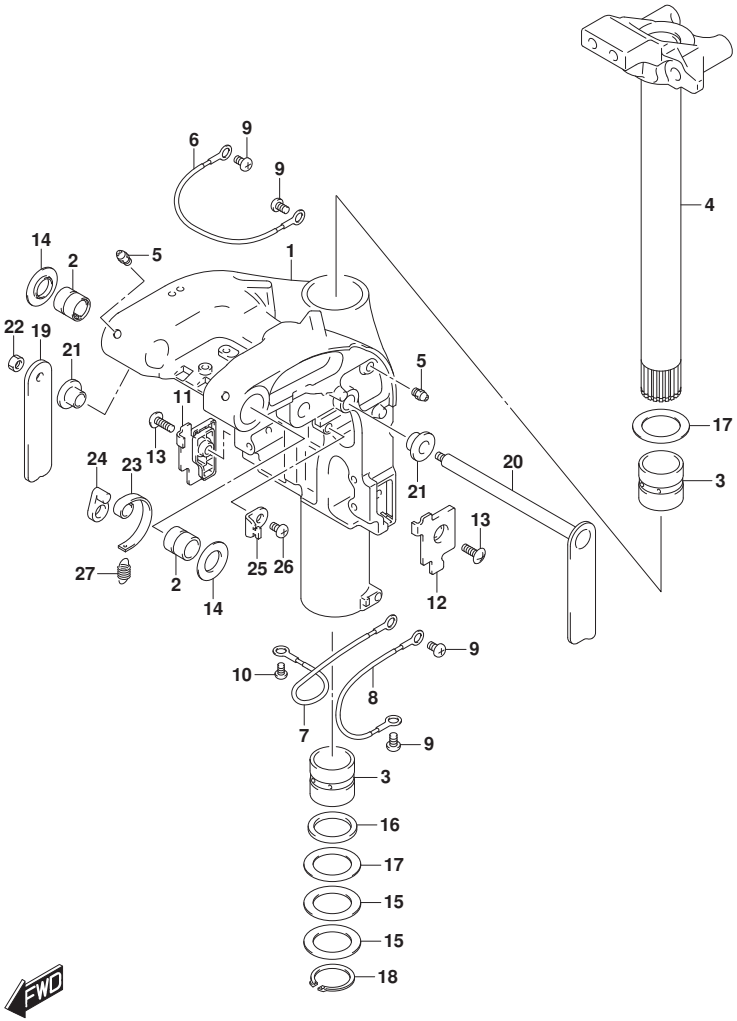

FIG.336L (1-K-3) SWIVEL BRACKET (DF60AVTH E01)(DF60AVTH E40)

REF NO.	PART NO.	DESCRIPTION	Q'TY	REMARKS
1-1	43111-88L50-YAY	BRACKET, SWIVEL (S) (BLACK)	1	W/TRANSOM(L)
1-2	43111-88L40-YAY	BRACKET, SWIVEL (L) (BLACK)	1	W/TRANSOM(X)
2	43211-88L00	BUSH, SWIVEL BRACKET	2	
3	43711-97E01	BUSH, STEERING	2	
4-1	43750-88L32-YAY	BRACKET, STEERING (S) (BLACK)	1	W/TRANSOM(L)
4-2	43750-88L22-YAY	BRACKET, STEERING (L) (BLACK)	1	W/TRANSOM(X)
5	22511-99011	NIPPLE, GREASE	4	
6	36894-87D00	LEAD (CLAMP TO SWIVEL)	1	
7	36895-87D01	LEAD (SWIVEL TO MOUNT BRKT)	1	
8	36895-87D01	LEAD (SWIVEL TO HOUSING)	1	
9	09125-06063	SCREW (6X10)	4	
10	09125-05050	SCREW (5X8)	1	
11	43119-88L00	PLATE, SWIVEL BRKT LOWER STBD	1	
12	43119-88L10	PLATE, SWIVEL BRKT LOWER PORT	1	
13	09125-06067	SCREW (6X16)	2	
14	43114-88L00	WASHER, SWIVEL TO CLAMP BRKT	2	
15	09160-39003	WASHER (39.5X58X0.3)	2	
16	09282-39001	OIL SEAL (39X51X5)	1	
17	09160-39002	WASHER (39.5X58X1)	2	
18	09380-38003	CIRCLIP	1	
19	41221-88L00	LEVER, TILT LOCK STBD	1	
20	41280-88L10	LEVER, TILT LOCK PORT	1	
21	41224-88L00	BUSH, TILT LOCK LEVER	2	
22	29141-93J00	NUT, TILT LOCK LEVER STBD	1	
23	41231-88L01	LINK, TILT LOCK LEVER	1	
24	41234-88L00	ARM, TILT LOCK LINK	1	
25	45731-96312	BRACKET, SPRING	1	
26	09125-06063	SCREW (6X10)	1	
27	09443-10043	SPRING	1	

DF60AVTH E01
DF60AVTH E40

DF60A_E01_018_336L
SWIVEL BRACKET

FIG.337A

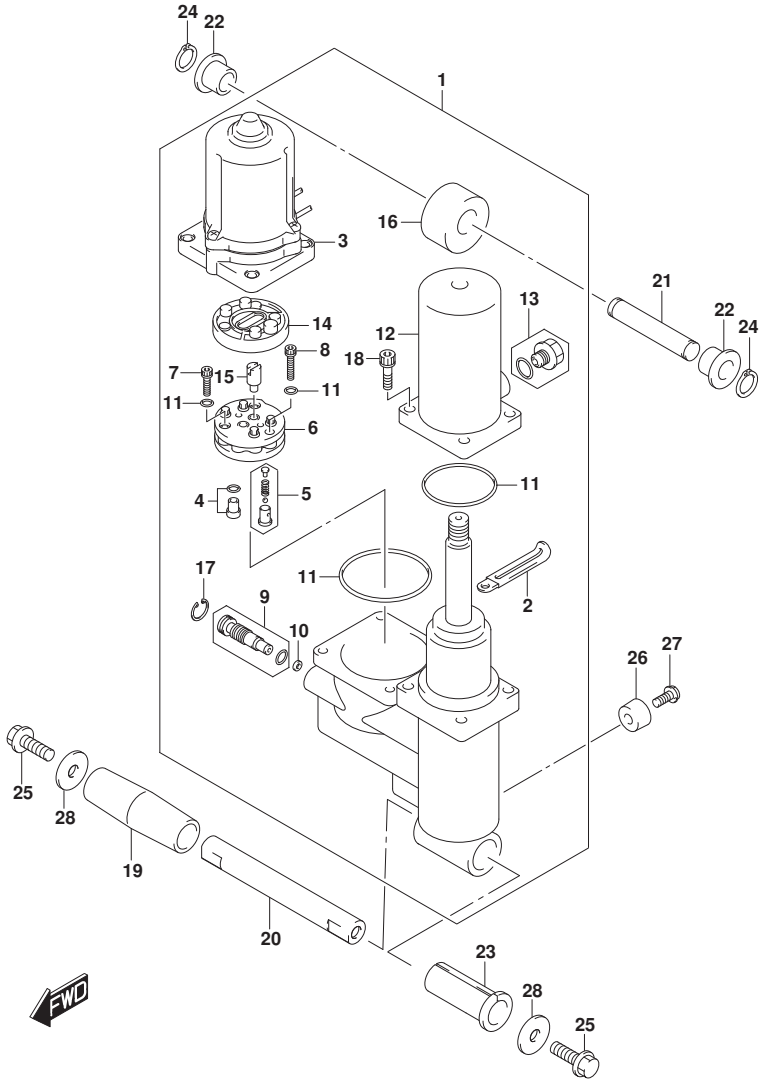

FIG.337A (1-K-4) TRIM CYLINDER (DF40A)(DF40ATH)(DF50A)(DF50ATH)

REF NO.	PART NO.	DESCRIPTION	Q'TY	REMARKS
1	48000-88L15	TRIM ASSY, POWER WITH TILT	1	
2	29404-93J10	.CLAMP	1	
3	38100-88L11	.MOTOR ASSY, PTT	1	
4	48320-87J10	.VALVE, UPPER PRESSURE	1	
5	48330-87J10	.VALVE, DOWN PRESSURE	1	
6	48510-97E00	.PUMP ASSY, GEAR	1	
7	48541-87J10	.BOLT	2	
8	48541-87J20	.BOLT	1	
9	48551-88L00	.VALVE, MANUAL	1	
10	48553-88L00	.SEAL WASHER	1	
11	48557-87J10	.O RING SET	1	
12	48571-88L00	.TANK, RESERVOIR	1	
13	48572-87L00	.PLUG	1	
14	48582-97E01	.FILTER	1	
15	48583-87J10	.JOINT, DRIVE	1	
16	48611-88L00	.JOINT, METAL	1	
17	48681-87J11	.CIRCLIP	1	
18	48862-87J20	.BOLT, TANK	4	
19	47225-87J00	COLLAR, TILT CYLINDER LOWER	1	
20	48121-89J10	SHAFT, TILT CYL LOWER	1	
21	48321-89J11	SHAFT, TILT CYL UPPER	1	
22	48325-89J00	BUSH, TILT CYL UPPER	2	
23	48326-87J00	BUSH, TILT CYL LOWER	1	
24	09380-12002	SNAP RING	2	
25	09116-10179	BOLT (10X35)	2	
26	55321-87J01	ANODE, PROTECTION	1	
27	09103-06281	BOLT (6X14)	1	
28	09160-10139	WASHER (10.5X35X3)	2	

DF40A E01
DF40ATH E01
DF50A E01
DF50ATH E01

DF60A_E01_018_337A
TRIM CYLINDER

FIG.337B

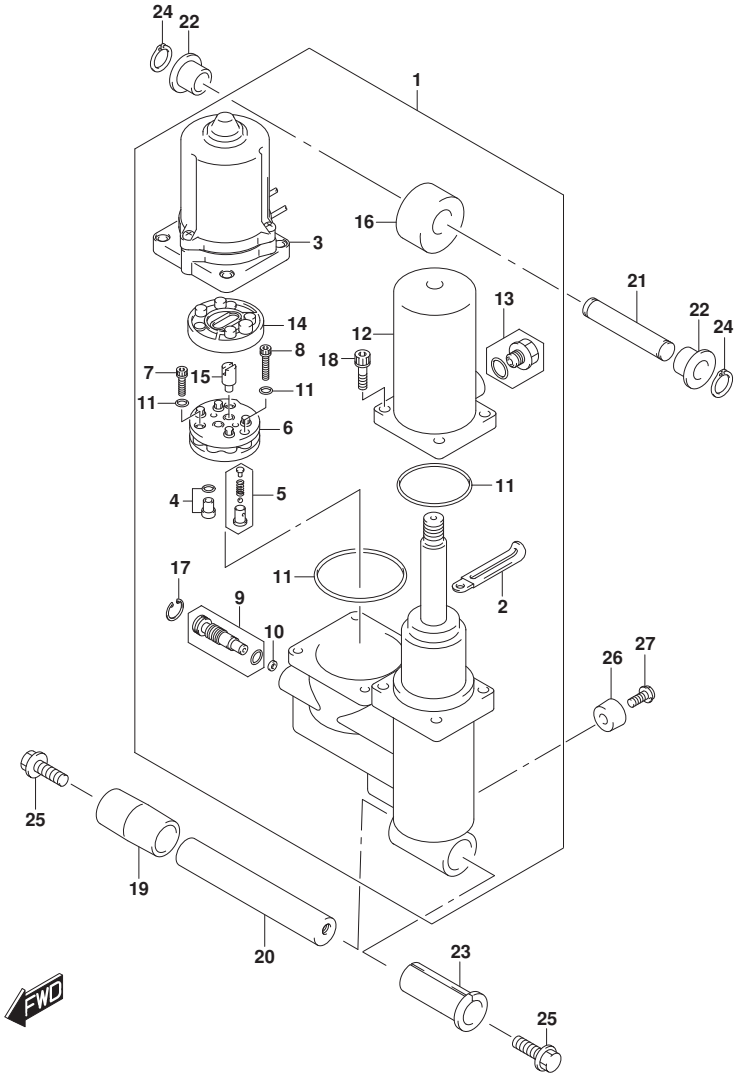

FIG.337B (1-K-5) TRIM CYLINDER (DF40AST)(DF60A)(DF60ATH)

REF NO.	PART NO.	DESCRIPTION	Q'TY	REMARKS
1	48000-88L15	TRIM ASSY, POWER WITH TILT	1	
2	29404-93J10	.CLAMP	1	
3	38100-88L11	.MOTOR ASSY, PTT	1	
4	48320-87J10	.VALVE, UPPER PRESSURE	1	
5	48330-87J10	.VALVE, DOWN PRESSURE	1	
6	48510-97E00	.PUMP ASSY, GEAR	1	
7	48541-87J10	.BOLT	2	
8	48541-87J20	.BOLT	1	
9	48551-88L00	.VALVE, MANUAL	1	
10	48553-88L00	.SEAL WASHER	1	
11	48557-87J10	.O RING SET	1	
12	48571-88L00	.TANK, RESERVOIR	1	
13	48572-87L00	.PLUG	1	
14	48582-97E01	.FILTER	1	
15	48583-87J10	.JOINT, DRIVE	1	
16	48611-88L00	.JOINT, METAL	1	
17	48681-87J11	.CIRCLIP	1	
18	48862-87J20	.BOLT, TANK	4	
19	47225-88L00	COLLAR, TILT CYLINDER LOWER	1	
20	48121-88L00	SHAFT, TILT CYL LOWER	1	
21	48321-89J11	SHAFT, TILT CYL UPPER	1	
22	48325-89J00	BUSH, TILT CYL UPPER	2	
23	48326-87J00	BUSH, TILT CYL LOWER	1	
24	09380-12002	SNAP RING	2	
25	09116-10179	BOLT (10X35)	2	
26	55321-87J01	ANODE, PROTECTION	1	
27	09103-06281	BOLT (6X14)	1	

DF40AST E34
DF60A E01
DF60A E40
DF60ATH E01
DF60ATH E40

DF60A_E01_018_337B
TRIM CYLINDER

FIG.337C

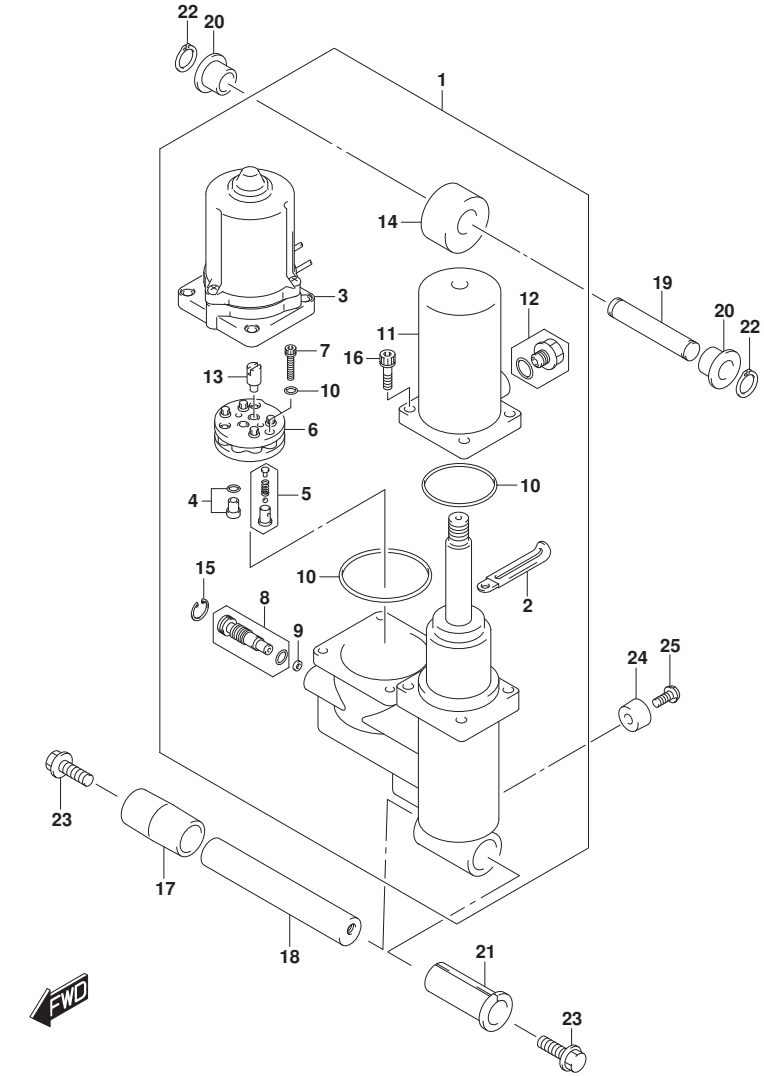

FIG.337C (1-K-6) TRIM CYLINDER (DF50AVT)(DF50AVTH)(DF60AVT)(DF60AVTH)

REF NO.	PART NO.	DESCRIPTION	Q'TY	REMARKS
1	48000-88L20	TRIM ASSY, POWER WITH TILT	1	
2	29404-93J10	.CLAMP	1	
3	38100-88L11	.MOTOR ASSY, PTT	1	
4	48320-87J10	.VALVE, UPPER PRESSURE	1	
5	48330-87J20	.VALVE, DOWN PRESSURE	1	
6	48510-97E10	.PUMP ASSY, GEAR	1	
7	48541-87J20	.BOLT	3	
8	48551-88L10	.VALVE, MANUAL	1	
9	48553-88L00	.SEAL WASHER	1	
10	48557-87J10	.O RING SET	1	
11	48571-88L00	.TANK, RESERVOIR	1	
12	48572-87L00	.PLUG	1	
13	48583-87J10	.JOINT, DRIVE	1	
14	48611-88L00	.JOINT, METAL	1	
15	48681-87J11	.CIRCLIP	1	
16	48862-87J20	.BOLT, TANK	4	
17	47225-88L00	COLLAR, TILT CYLINDER LOWER	1	
18	48121-88L10	SHAFT, TILT CYL LOWER	1	
19	48321-89J20	SHAFT, TILT CYL UPPER	1	
20	48325-89J10	BUSH, TILT CYL UPPER	2	
21	48326-87J00	BUSH, TILT CYL LOWER	1	
22	09380-12002	SNAP RING	2	
23	09116-10179	BOLT (10X35)	2	
24	55321-87J01	ANODE, PROTECTION	1	
25	09103-06281	BOLT (6X14)	1	

DF50AVT E01
DF50AVTH E01
DF60AVT E01
DF60AVT E40
DF60AVTH E01
DF60AVTH E40

DF60A_E01_018_337C
TRIM CYLINDER

FIG.339A

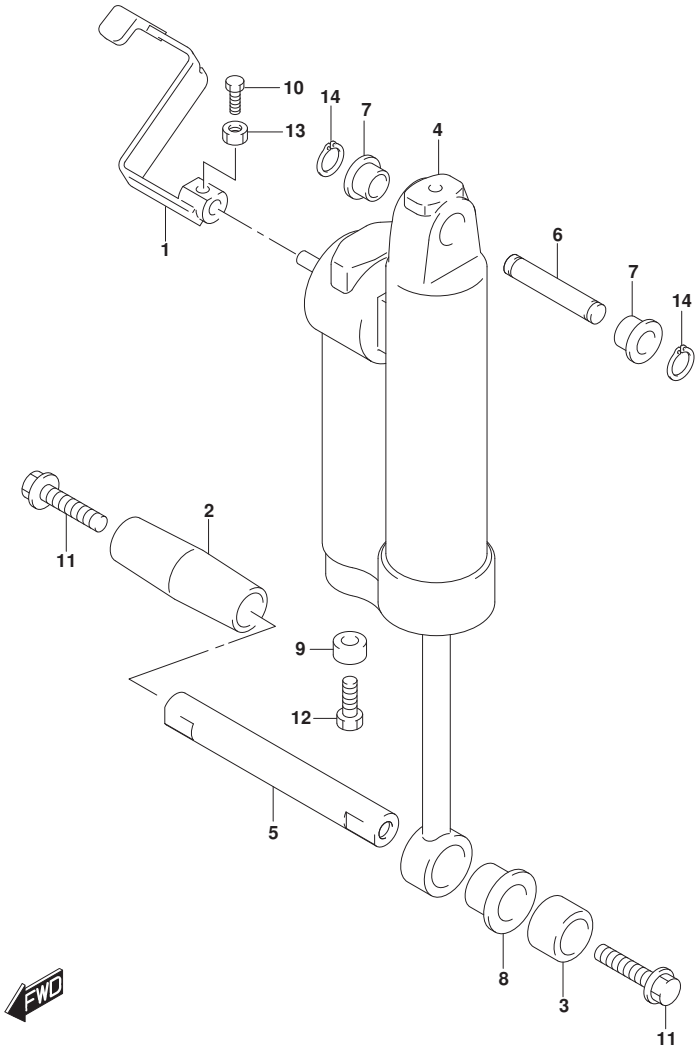

FIG.339A (1-K-7) GAS CYLINDER (DF40AQH)(DF60AQH)

REF NO.	PART NO.	DESCRIPTION	Q'TY	REMARKS
1	45260-89J00	LEVER, RELEASE	1	
2	47225-89J00	COLLAR, TILT CYL LOWER STBD	1	
3	47226-89J00	COLLAR, TILT CYL LOWER PORT	1	
4	47400-87J32	CYLINDER ASSY, GAS	1	
5	48121-89J10	SHAFT, TILT CYLINDER LOWER	1	
6	48321-89J11	SHAFT, TILT CYLINDER UPPER	1	
7	48325-89J00	BUSH, TILT CYLINDER UPPER	2	
8	48326-89J00	BUSH, TILT CYLINDER LOWER	1	
9	55321-87J01	ANODE, PROTECTION	1	
10	09100-06113	BOLT (6X16)	1	
11	09116-10179	BOLT (10X35)	2	
12	09103-06281	BOLT (6X14)	1	
13	09140-06020	NUT	1	
14	09380-12002	SNAP RING	2	

DF40AQH E01
DF60AQH E01
DF60AQH E40

DF60A_E01_018_339A
GAS CYLINDER

FIG.340A

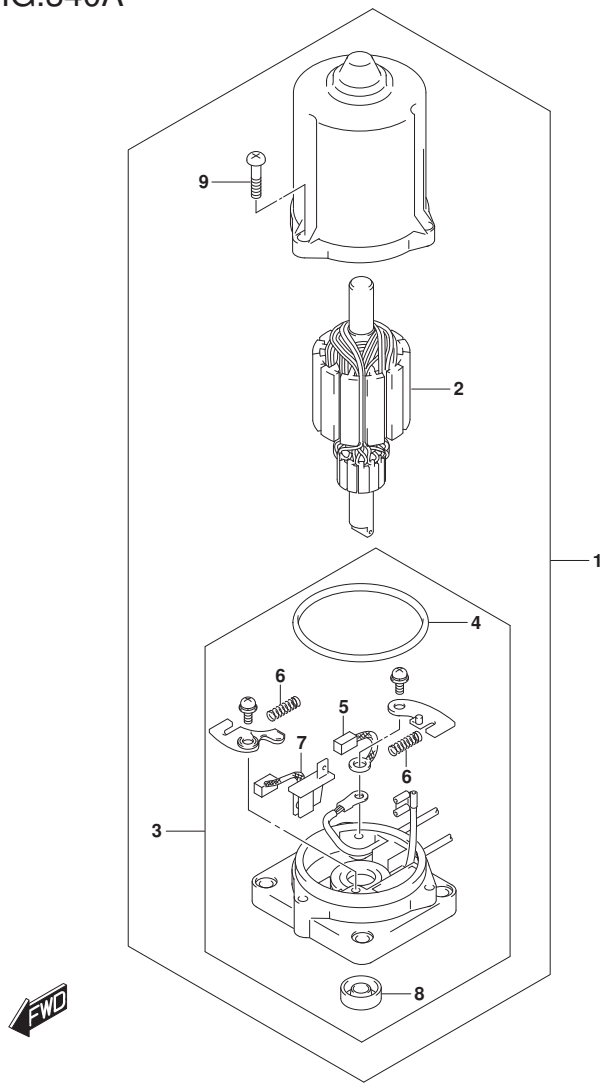

FIG.340A (1-K-8) PTT MOTOR (DF40A)(DF40ATH)(DF40AST)(DF50A)(DF50ATH)(DF60A)(

REF NO.	PART NO.	DESCRIPTION	Q'TY	REMARKS
1	38100-88L11	MOTOR ASSY, PTT	1	
2	31311-87J10	.ARMATURE	1	
3	31173-88L11	.HOLDER ASSY, BRUSH	1	
4	31123-97E10	..O RING	1	
5	31133-94900	..BRUSH	1	
6	31135-94900	..SPRING	2	
7	31136-87J10	..BREAKER ASSY	1	
8	33799-97E00	..SEAL, OIL	1	
9	31111-87J10	.SCREW	3	

DF40A E01
DF40ATH E01
DF40AST E34
DF50A E01
DF50ATH E01
DF60A E01
DF60A E40
DF60ATH E01
DF60ATH E40

DF60A_E01_018_340A
PTT MOTOR

FIG.340B

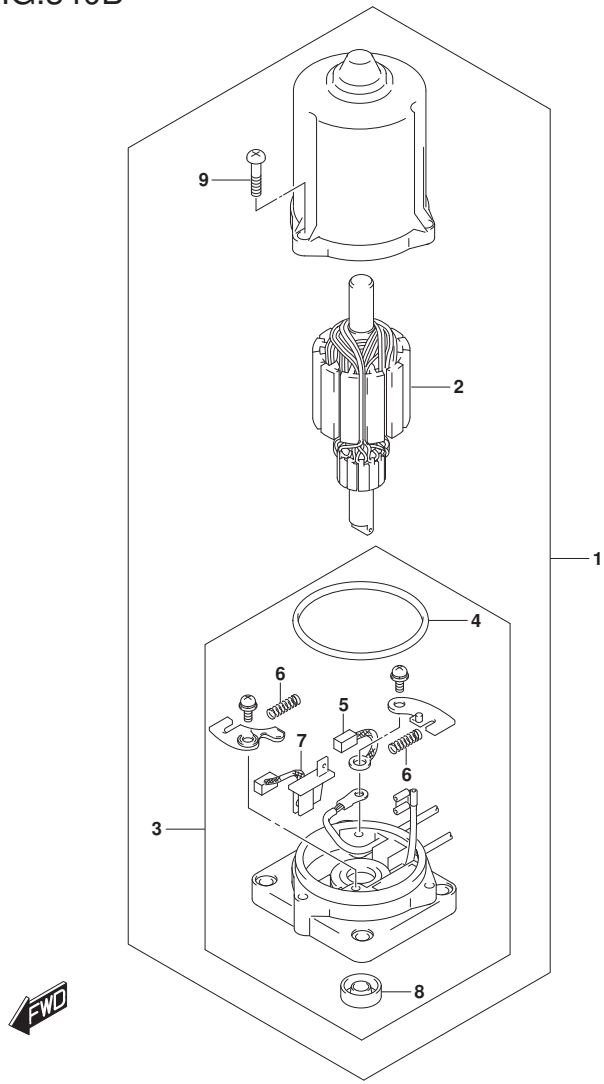

FIG.340B (1-K-9) PTT MOTOR (DF50AVT)(DF50AVTH)(DF60AVT)(DF60AVTH)

REF NO.	PART NO.	DESCRIPTION	Q'TY	REMARKS
1	38100-88L11	MOTOR ASSY, PTT	1	
2	31311-87J10	.ARMATURE	1	
3	31173-88L11	.HOLDER ASSY, BRUSH	1	
4	31123-97E10	..O RING	1	
5	31133-94900	..BRUSH	1	
6	31135-94900	..SPRING	2	
7	31136-87J10	..BREAKER ASSY	1	
8	33799-97E00	..SEAL, OIL	1	
9	31111-87J10	.SCREW	3	

DF50AVT E01
DF50AVTH E01
DF60AVT E01
DF60AVT E40
DF60AVTH E01
DF60AVTH E40

DF60A_E01_018_340B
PTT MOTOR

FIG.401A

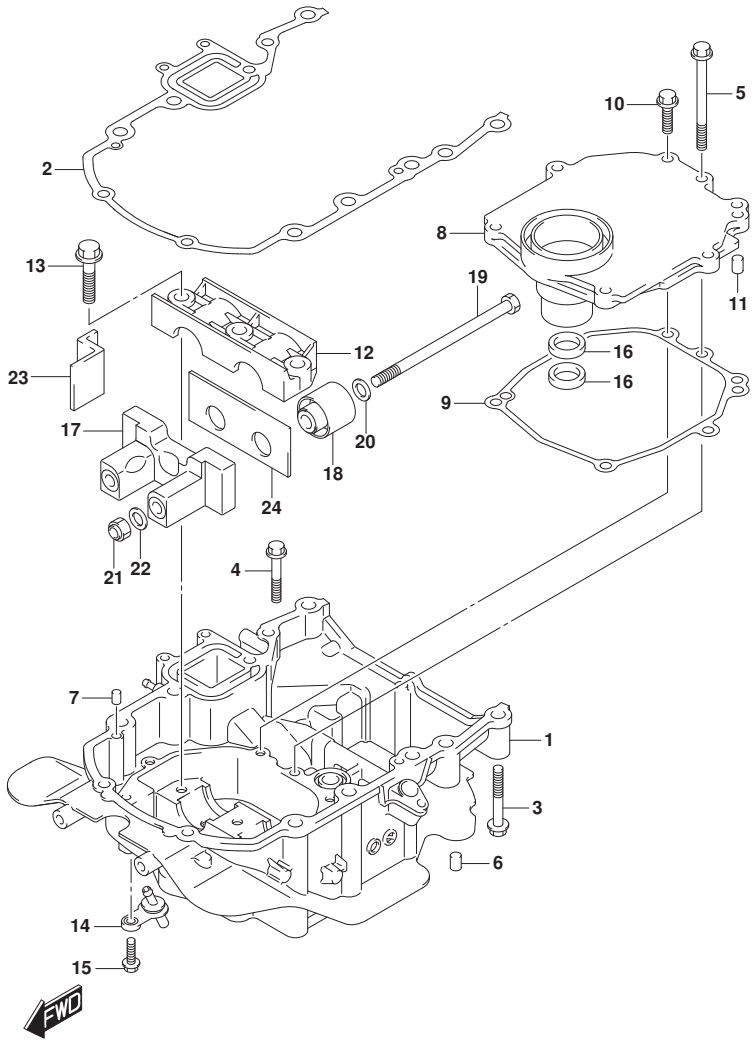

FIG.401A (1-K-10) ENGINE HOLDER (DF40A)(DF40AST)(DF50A)(DF60A)

REF NO.	PART NO.	DESCRIPTION	Q'TY	REMARKS
1-1	51110-88L10-YAY	HOLDER, ENGINE (BLACK)	1	
1-2	51110-88L10-Y5S	HOLDER, ENGINE (WHITE)	1	
2	51211-88L00	GASKET, ENGINE HOLDER	1	
3	09116-08159	BOLT (8X55)	8	
4	01550-0845A	BOLT	1	
5	01550-0885A	BOLT	1	
6	09202-08006	PIN (8X12)	2	
7	09202-08006	PIN (8X12)	2	
8	51122-88L00	COVER, MOUNT CASE	1	
9	51123-88L00	GASKET, MOUNT CASE COVER	1	
10	01550-0825A	BOLT	6	
11	09202-08006	PIN (8X12)	2	
12	54137-88L00	COVER, UPPER MOUNT	1	
13	09116-10181	BOLT (10X44)	3	
14	51170-88L00	BRACKET, WATER INDICATOR	1	
15	29116-93J00	BOLT, WATER INDICATOR UNION	1	
16	09282-17011	OIL SEAL (16.5X28X6)	2	
17	54124-88L20	BRACKET, UPPER THRUST	1	
18	54130-88L00	MOUNT, UPPER	2	
19	54166-95J02	BOLT, UPPER MOUNT	2	
20	54114-90J10	WASHER, UPPER MOUNT BOLT	2	
21	09159-12014	NUT	2	
22	09160-12110	WASHER (12.5X22X3)	2	
23	54121-88L00	MOUNT, UPPER THRUST FR	2	
24	54123-88L00	MOUNT, UPPER THRUST RR	1	

DF40A E01
DF40AST E34
DF50A E01
DF60A E01
DF60A E40

DF60A_E01_018_401A
ENGINE HOLDER

FIG.401B

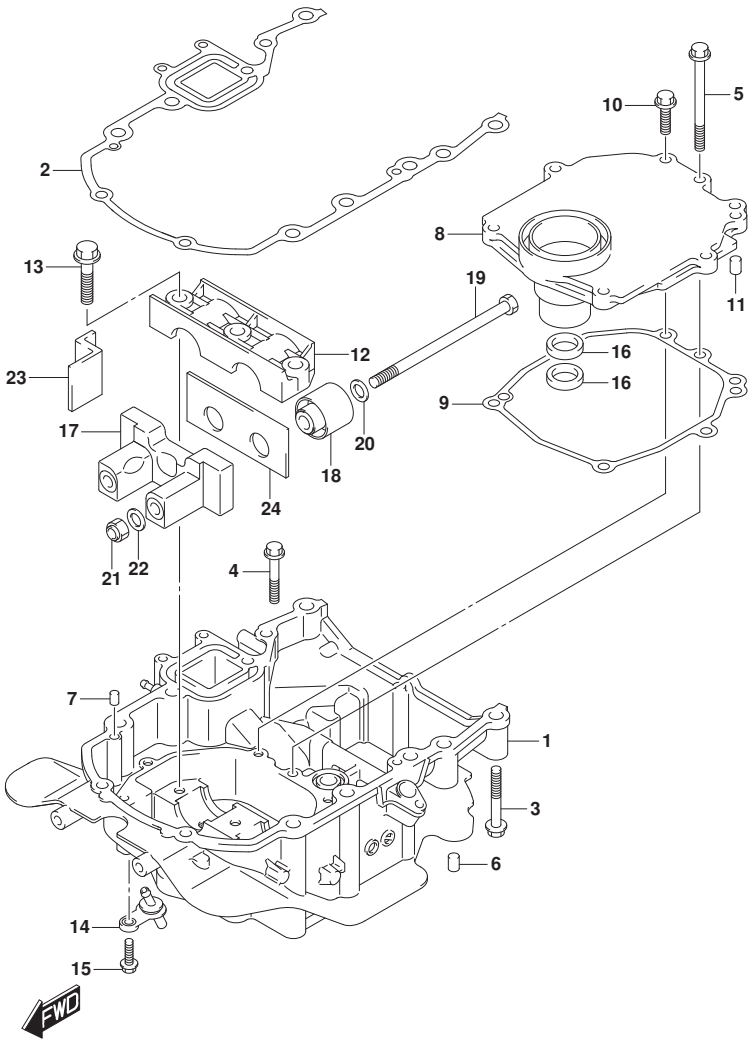

FIG.401B (1-K-11) ENGINE HOLDER (DF40AQH)(DF40ATH)(DF50ATH)(DF60AQH)(DF60A

REF NO.	PART NO.	DESCRIPTION	Q'TY	REMARKS
1	51110-88L10-YAY	HOLDER, ENGINE (BLACK)	1	
2	51211-88L00	GASKET, ENGINE HOLDER	1	
3	09116-08159	BOLT (8X55)	8	
4	01550-0845A	BOLT	1	
5	01550-0885A	BOLT	1	
6	09202-08006	PIN (8X12)	2	
7	09202-08006	PIN (8X12)	2	
8	51122-88L00	COVER, MOUNT CASE	1	
9	51123-88L00	GASKET, MOUNT CASE COVER	1	
10	01550-0825A	BOLT	6	
11	09202-08006	PIN (8X12)	2	
12	54137-88L00	COVER, UPPER MOUNT	1	
13	09116-10181	BOLT (10X44)	3	
14	51170-88L00	BRACKET, WATER INDICATOR	1	
15	29116-93J00	BOLT, WATER INDICATOR UNION	1	
16	09282-17011	OIL SEAL (16.5X28X6)	2	
17	54124-88L20	BRACKET, UPPER THRUST	1	
18	54130-88L00	MOUNT, UPPER	2	
19	54166-95J02	BOLT, UPPER MOUNT	2	
20	54114-90J10	WASHER, UPPER MOUNT BOLT	2	
21	09159-12014	NUT	2	
22	09160-12110	WASHER (12.5X22X3)	2	
23	54121-88L00	MOUNT, UPPER THRUST FR	2	
24	54123-88L00	MOUNT, UPPER THRUST RR	1	

DF40AQH E01
DF40ATH E01
DF50ATH E01
DF60AQH E01
DF60AQH E40
DF60ATH E01
DF60ATH E40

DF60A_E01_018_401B
ENGINE HOLDER

FIG.401C

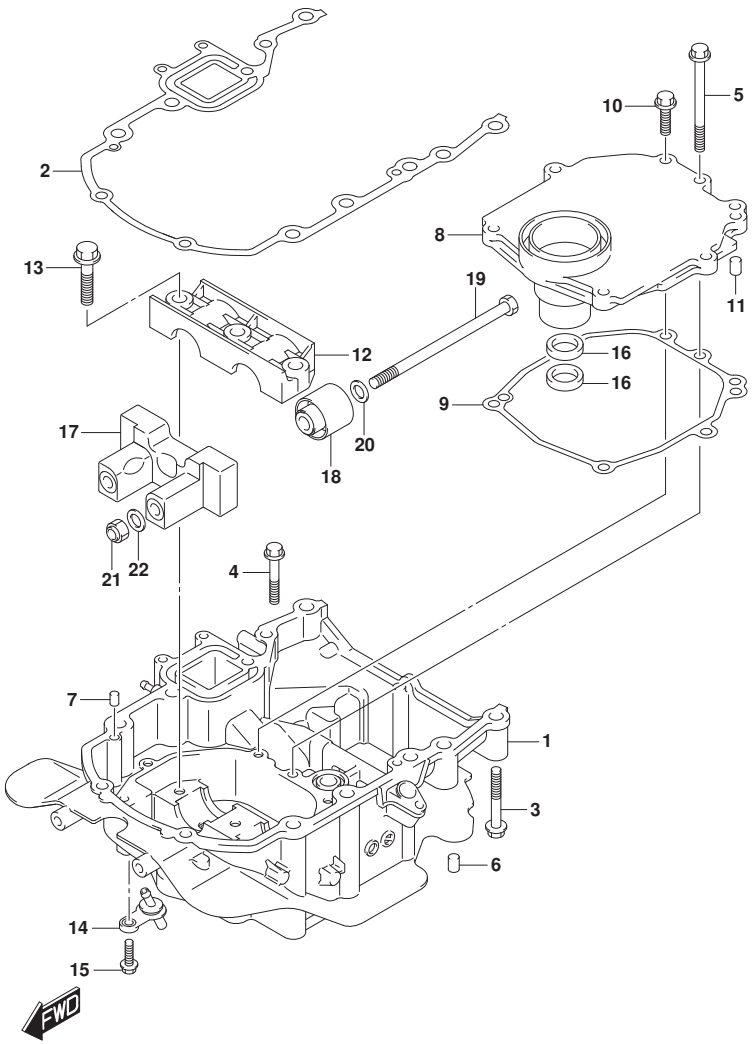

FIG.401C (1-K-12) ENGINE HOLDER (DF50AVT)(DF50AVTH)(DF60AVT)(DF60AVTH)

REF NO.	PART NO.	DESCRIPTION	Q'TY	REMARKS
1	51110-88L10-YAY	HOLDER, ENGINE (BLACK)	1	
2	51211-88L00	GASKET, ENGINE HOLDER	1	
3	09116-08159	BOLT (8X55)	8	
4	01550-0845A	BOLT	1	
5	01550-0885A	BOLT	1	
6	09202-08006	PIN (8X12)	2	
7	09202-08006	PIN (8X12)	2	
8	51122-88L00	COVER, MOUNT CASE	1	
9	51123-88L00	GASKET, MOUNT CASE COVER	1	
10	01550-0825A	BOLT	6	
11	09202-08006	PIN (8X12)	2	
12	54137-88L00	COVER, UPPER MOUNT	1	
13	09116-10181	BOLT (10X44)	3	
14	51170-88L00	BRACKET, WATER INDICATOR	1	
15	29116-93J00	BOLT, WATER INDICATOR UNION	1	
16	09282-17011	OIL SEAL (16.5X28X6)	2	
17	54120-88L00	MOUNT, UPPER THRUST F	1	
18	54130-88L00	MOUNT, UPPER	2	
19	54166-95J02	BOLT, UPPER MOUNT	2	
20	54114-90J10	WASHER, UPPER MOUNT BOLT	2	
21	09159-12014	NUT	2	
22	09160-12110	WASHER (12.5X22X3)	2	

DF50AVT E01
DF50AVTH E01
DF60AVT E01
DF60AVT E40
DF60AVTH E01
DF60AVTH E40

DF60A_E01_018_401C
ENGINE HOLDER

FIG.405A

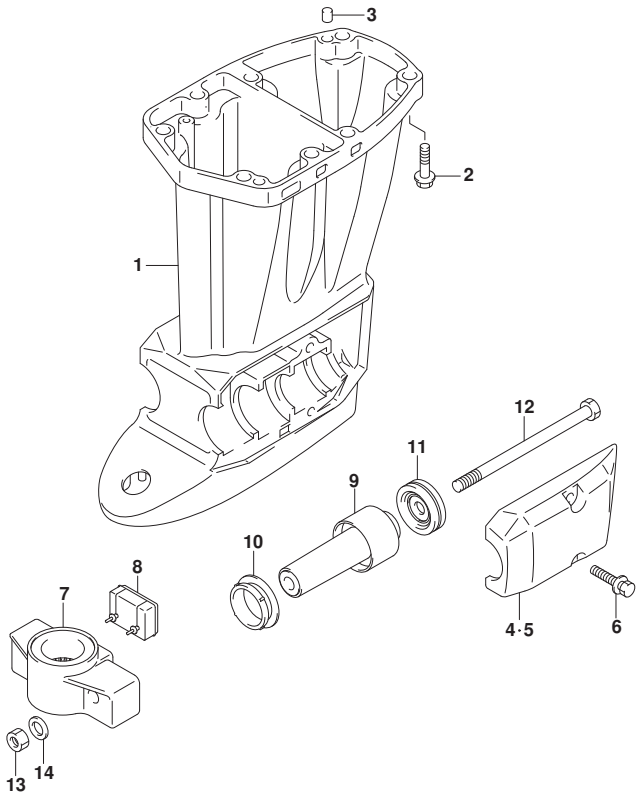

FIG.405A (1-K-13) DRIVE SHAFT HOUSING (DF40A E01)(DF40AST E34)(DF50A E01)

REF NO.	PART NO.	DESCRIPTION	Q'TY	REMARKS
1-1	52111-88L00-YAY	HOUSING, DRIVE SHAFT (S) (BLACK)	1	W/TRANSOM(S)
1-2	52111-88L00-Y5S	HOUSING, DRIVE SHAFT (S) (WHITE)	1	W/TRANSOM(S)
1-3	52111-88L10-YAY	HOUSING, DRIVE SHAFT (L) (BLACK)	1	W/TRANSOM(L)
1-4	52111-88L10-Y5S	HOUSING, DRIVE SHAFT (L) (WHITE)	1	W/TRANSOM(L)
2	09116-10181	BOLT (10X44)	8	
3	09202-08006	PIN (8X12)	2	
4-1	54221-88L20-YAY	COVER, LOWER MOUNT STBD (BLACK)	1	
4-2	54221-88L20-Y5S	COVER, LOWER MOUNT STBD (WHITE)	1	
5-1	54231-88L10-YAY	COVER, LOWER MOUNT PORT (BLACK)	1	
5-2	54231-88L10-Y5S	COVER, LOWER MOUNT PORT (WHITE)	1	
6	09116-10181	BOLT (10X44)	4	
7-1	54211-87J30-YAY	BRACKET, LOWER MOUNT (BLACK)	1	
7-2	54211-87J30-Y5S	BRACKET, LOWER MOUNT (WHITE)	1	
8	54151-88L00	MOUNT, LOWER THRUST	1	
9	54160-88L10	MOUNT, LOWER	2	
10	54167-87L01	MOUNT, LOWER SIDE	2	
11	54180-88L00	DAMPER, FORWARD STOPPER	2	
12	54166-95J02	BOLT, LOWER MOUNT	2	
13	09159-12014	NUT	2	
14	09160-12110	WASHER (12.5X22X3)	2	

DF40A E01
DF40AST E34
DF50A E01

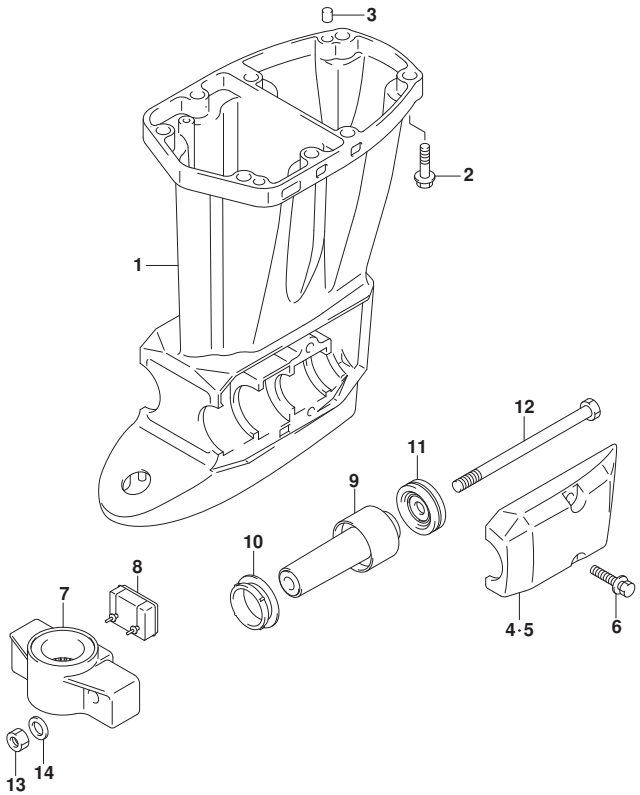

FIG.405B (1-K-14) DRIVE SHAFT HOUSING (DF40AQH E01)(DF40ATH E01)(DF50ATH E0

REF NO.	PART NO.	DESCRIPTION	Q'TY	REMARKS
1	52111-88L10-YAY	HOUSING, DRIVE SHAFT (L) (BLACK)	1	
2	09116-10181	BOLT (10X44)	8	
3	09202-08006	PIN (8X12)	2	
4	54221-88L20-YAY	COVER, LOWER MOUNT STBD (BLACK)	1	
5	54231-88L10-YAY	COVER, LOWER MOUNT PORT (BLACK)	1	
6	09116-10181	BOLT (10X44)	4	
7	54211-87J30-YAY	BRACKET, LOWER MOUNT (BLACK)	1	
8	54151-88L00	MOUNT, LOWER THRUST	1	
9	54160-88L10	MOUNT, LOWER	2	
10	54167-87L01	MOUNT, LOWER SIDE	2	
11	54180-88L00	DAMPER, FWD STOPPER	2	
12	54166-95J02	BOLT, LOWER MOUNT	2	
13	09159-12014	NUT	2	
14	09160-12110	WASHER (12.5X22X3)	2	

DF40AQH E01
DF40ATH E01
DF50ATH E01

FIG.405C

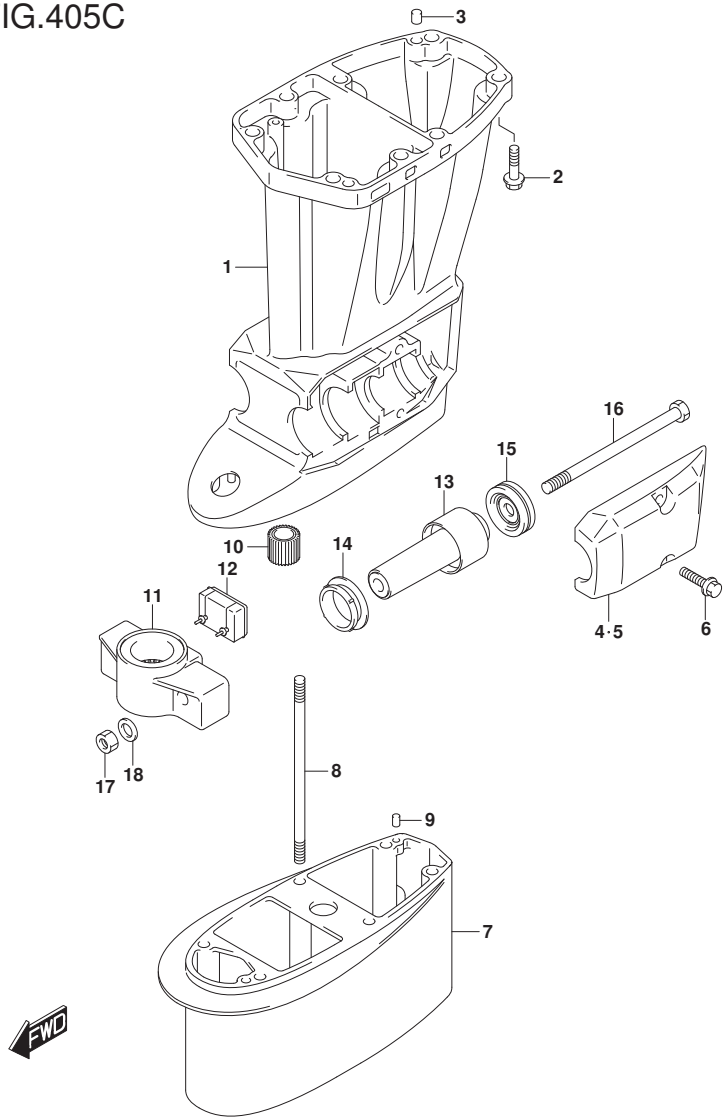

FIG.405C (1-K-15) DRIVE SHAFT HOUSING (DF60A E01)

REF NO.	PART NO.	DESCRIPTION	Q'TY	REMARKS
1-1	52111-88L00-YAY	HOUSING, DRIVE SHAFT (S) (BLACK)	1	W/TRANSOM(S)
1-2	52111-88L00-Y5S	HOUSING, DRIVE SHAFT (S) (WHITE)	1	W/TRANSOM(S)
1-3	52111-88L10-YAY	HOUSING, DRIVE SHAFT (L) (BLACK)	1	W/TRANSOM(L) W/TRANSOM(X)
1-4	52111-88L10-Y5S	HOUSING, DRIVE SHAFT (L) (WHITE)	1	W/TRANSOM(L) W/TRANSOM(X)
2	09116-10181	BOLT (10X44)	8	
3	09202-08006	PIN (8X12)	2	
4-1	54221-88L20-YAY	COVER, LOWER MOUNT STBD (BLACK)	1	
4-2	54221-88L20-Y5S	COVER, LOWER MOUNT STBD (WHITE)	1	
5-1	54231-88L10-YAY	COVER, LOWER MOUNT PORT (BLACK)	1	
5-2	54231-88L10-Y5S	COVER, LOWER MOUNT PORT (WHITE)	1	
6	09116-10181	BOLT (10X44)	4	
7-1	52131-88L00-YAY	CASE, EXTENSION (BLACK)	1	W/TRANSOM(X)
7-2	52131-88L00-Y5S	CASE, EXTENSION (WHITE)	1	W/TRANSOM(X)
8	09108-08254	STUD BOLT	6	W/TRANSOM(X)
9	09202-06023	PIN (6X10)	2	W/TRANSOM(X)
10	57130-94301	BUSH, DRIVE SHAFT	1	W/TRANSOM(X)

DF60A_E01_018_405C
DRIVE SHAFT HOUSING

FIG.405C

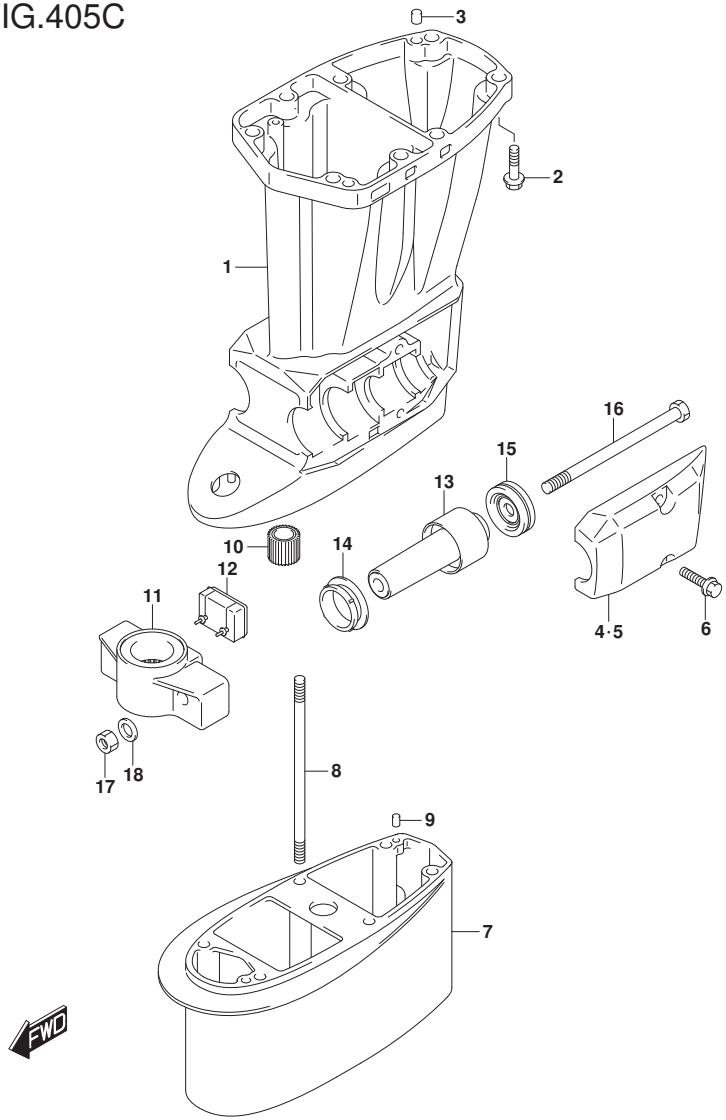

FIG.405C (1-L-2) DRIVE SHAFT HOUSING (DF60A E01)

REF NO.	PART NO.	DESCRIPTION	Q'TY	REMARKS
11-1	54211-87J30-YAY	BRACKET, LOWER MOUNT (BLACK)	1	
11-2	54211-87J30-Y5S	BRACKET, LOWER MOUNT (WHITE)	1	
12	54151-88L00	MOUNT, LOWER THRUST	1	
13	54160-88L10	MOUNT, LOWER	2	
14	54167-87L01	MOUNT, LOWER SIDE	2	
15	54180-88L00	DAMPER, FWD STOPPER	2	
16	54166-95J02	BOLT, LOWER MOUNT	2	
17	09159-12014	NUT	2	
18	09160-12110	WASHER (12.5X22X3)	2	

DF60A E01

DF60A_E01_018_405C
DRIVE SHAFT HOUSING

FIG.405D

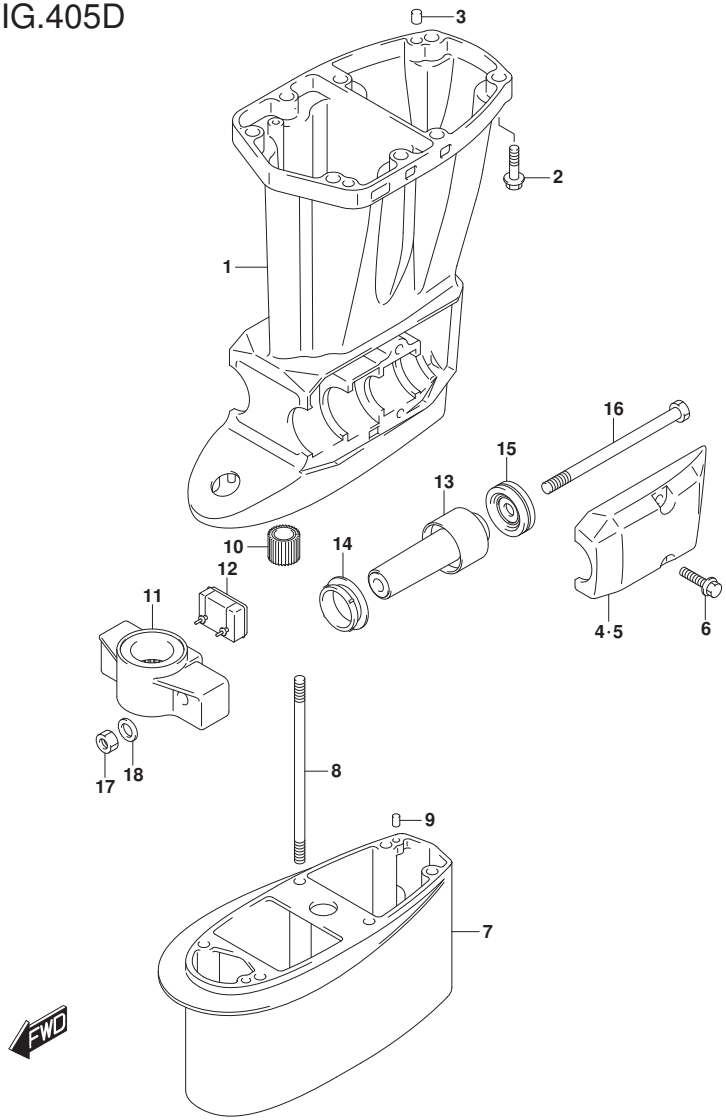

FIG.405D (1-L-3) DRIVE SHAFT HOUSING (DF60AQH E01)(DF60AQH E40)

REF NO.	PART NO.	DESCRIPTION	Q'TY	REMARKS
1	52111-88L10-YAY	HOUSING, DRIVE SHAFT (L) (BLACK)	1	
2	09116-10181	BOLT (10X44)	8	
3	09202-08006	PIN (8X12)	2	
4	54221-88L20-YAY	COVER, LOWER MOUNT STBD (BLACK)	1	
5	54231-88L10-YAY	COVER, LOWER MOUNT PORT (BLACK)	1	
6	09116-10181	BOLT (10X44)	4	
7	52131-88L00-YAY	CASE, EXTENSION (BLACK)	1	W/TRANSOM(X)
8	09108-08254	STUD BOLT	6	W/TRANSOM(X)
9	09202-06023	PIN (6X10)	2	W/TRANSOM(X)
10	57130-94301	BUSH, DRIVE SHAFT	1	W/TRANSOM(X)
11	54211-87J30-YAY	BRACKET, LOWER MOUNT (BLACK)	1	
12	54151-88L00	MOUNT, LOWER THRUST	1	
13	54160-88L10	MOUNT, LOWER	2	
14	54167-87L01	MOUNT, LOWER SIDE	2	
15	54180-88L00	DAMPER, FWD STOPPER	2	
16	54166-95J02	BOLT, LOWER MOUNT	2	
17	09159-12014	NUT	2	
18	09160-12110	WASHER (12.5X22X3)	2	

DF60AQH E01
DF60AQH E40

DF60A_E01_018_405D
DRIVE SHAFT HOUSING

FIG.405E

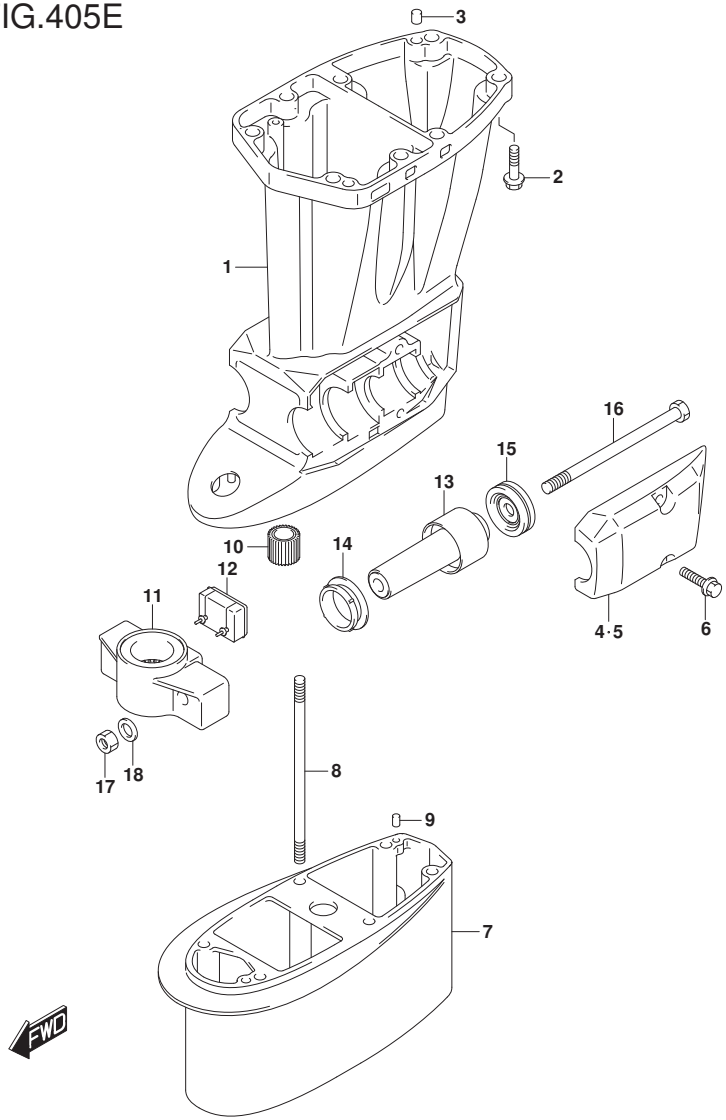

FIG.405E (1-L-4) DRIVE SHAFT HOUSING (DF60ATH E01)(DF60ATH E40)

REF NO.	PART NO.	DESCRIPTION	Q'TY	REMARKS
1	52111-88L10-YAY	HOUSING, DRIVE SHAFT (L) (BLACK)	1	
2	09116-10181	BOLT (10X44)	8	
3	09202-08006	PIN (8X12)	2	
4	54221-88L20-YAY	COVER, LOWER MOUNT STBD (BLACK)	1	
5	54231-88L10-YAY	COVER, LOWER MOUNT PORT (BLACK)	1	
6	09116-10181	BOLT (10X44)	4	
7	52131-88L00-YAY	CASE, EXTENSION (BLACK)	1	W/TRANSOM(X)
8	09108-08254	STUD BOLT	6	W/TRANSOM(X)
9	09202-06023	PIN (6X10)	2	W/TRANSOM(X)
10	57130-94301	BUSH, DRIVE SHAFT	1	W/TRANSOM(X)
11	54211-87J30-YAY	BRACKET, LOWER MOUNT (BLACK)	1	
12	54151-88L00	MOUNT, LOWER THRUST	1	
13	54160-88L10	MOUNT, LOWER	2	
14	54167-87L01	MOUNT, LOWER SIDE	2	
15	54180-88L00	DAMPER, FWD STOPPER	2	
16	54166-95J02	BOLT, LOWER MOUNT	2	
17	09159-12014	NUT	2	
18	09160-12110	WASHER (12.5X22X3)	2	

DF60ATH E01
DF60ATH E40

DF60A_E01_018_405E
DRIVE SHAFT HOUSING

FIG.405F

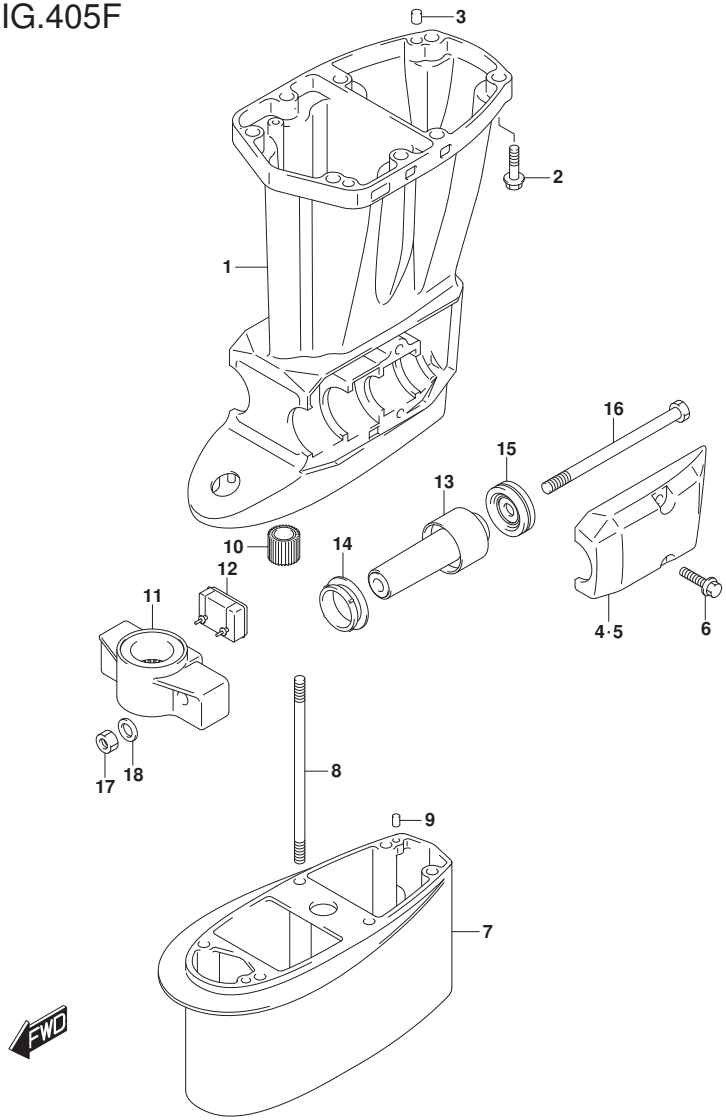

FIG.405F (1-L-5) DRIVE SHAFT HOUSING (DF60A E40)

REF NO.	PART NO.	DESCRIPTION	Q'TY	REMARKS
1-1	52111-88L10-YAY	HOUSING, DRIVE SHAFT (L) (BLACK)	1	
1-2	52111-88L10-Y5S	HOUSING, DRIVE SHAFT (L) (WHITE)	1	
2	09116-10181	BOLT (10X44)	8	
3	09202-08006	PIN (8X12)	2	
4-1	54221-88L20-YAY	COVER, LOWER MOUNT STBD (BLACK)	1	
4-2	54221-88L20-Y5S	COVER, LOWER MOUNT STBD (WHITE)	1	
5-1	54231-88L10-YAY	COVER, LOWER MOUNT PORT (BLACK)	1	
5-2	54231-88L10-Y5S	COVER, LOWER MOUNT PORT (WHITE)	1	
6	09116-10181	BOLT (10X44)	4	
7-1	52131-88L00-YAY	CASE, EXTENSION (BLACK)	1	W/TRANSOM(X)
7-2	52131-88L00-Y5S	CASE, EXTENSION (WHITE)	1	W/TRANSOM(X)
8	09108-08254	STUD BOLT	6	W/TRANSOM(X)
9	09202-06023	PIN (6X10)	2	W/TRANSOM(X)
10	57130-94301	BUSH, DRIVE SHAFT	1	W/TRANSOM(X)
11-1	54211-87J30-YAY	BRACKET, LOWER MOUNT (BLACK)	1	
11-2	54211-87J30-Y5S	BRACKET, LOWER MOUNT (WHITE)	1	
12	54151-88L00	MOUNT, LOWER THRUST	1	
13	54160-88L10	MOUNT, LOWER	2	
14	54167-87L01	MOUNT, LOWER SIDE	2	
15	54180-88L00	DAMPER, FWD STOPPER	2	
16	54166-95J02	BOLT, LOWER MOUNT	2	
17	09159-12014	NUT	2	
18	09160-12110	WASHER (12.5X22X3)	2	

DF60A E40

DF60A_E01_018_405F
DRIVE SHAFT HOUSING

FIG.405G

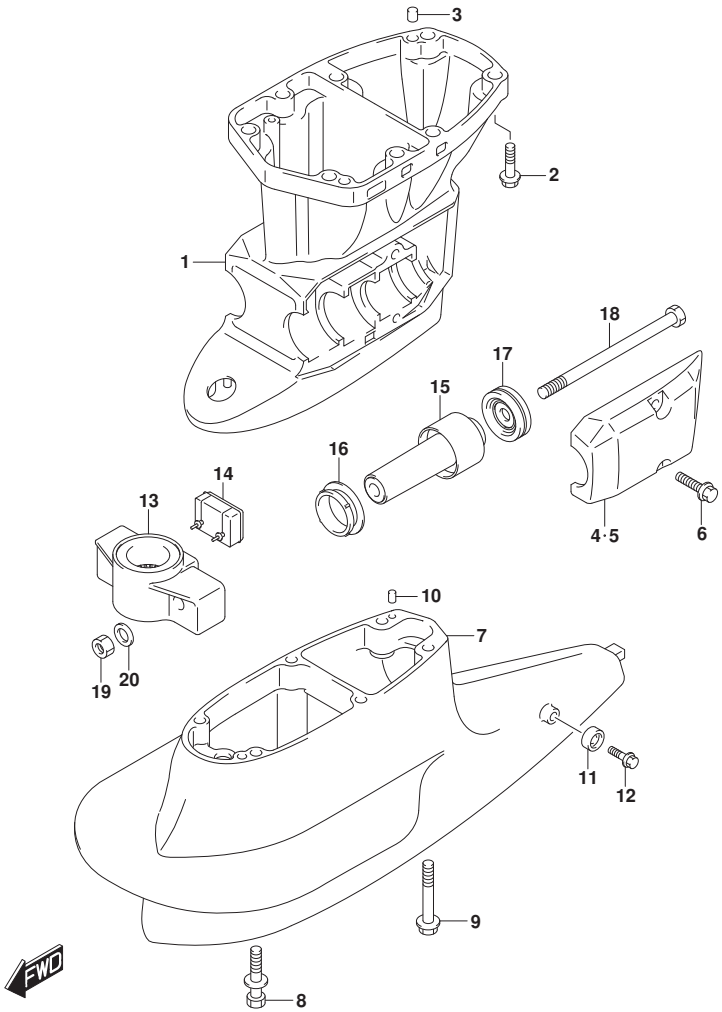

FIG.405G (1-L-6) DRIVE SHAFT HOUSING (DF50AVT E01)(DF50AVTH E01)

REF NO.	PART NO.	DESCRIPTION	Q'TY	REMARKS
1	52111-88L20-YAY	HOUSING, DRIVE SHAFT (S) (BLACK)	1	
2	09116-10181	BOLT (10X44)	8	
3	09202-08006	PIN (8X12)	2	
4	54221-88L20-YAY	COVER, LOWER MOUNT STBD (BLACK)	1	
5	54231-88L10-YAY	COVER, LOWER MOUNT PORT (BLACK)	1	
6	09116-10181	BOLT (10X44)	4	
7	52131-88L11-YAY	CASE, EXTENSION (BLACK)	1	
8	09116-08131	BOLT (8X45)	4	
9	09116-10150	BOLT (10X55)	2	
10	09202-06031	PIN (6X12)	2	
11	55321-87J01	ANODE, PROTECTION	1	
12	09103-06281	BOLT (6X14)	1	
13	54211-87J30-YAY	BRACKET, LOWER MOUNT (BLACK)	1	
14	54151-88L00	MOUNT, LOWER THRUST	1	
15	54160-88L10	MOUNT, LOWER	2	
16	54167-87L01	MOUNT, LOWER SIDE	2	
17	54180-88L00	DAMPER, FWD STOPPER	2	
18	54166-95J02	BOLT, LOWER MOUNT	2	
19	09159-12014	NUT	2	
20	09160-12110	WASHER (12.5X22X3)	2	

DF50AVT E01
DF50AVTH E01

FIG.405H

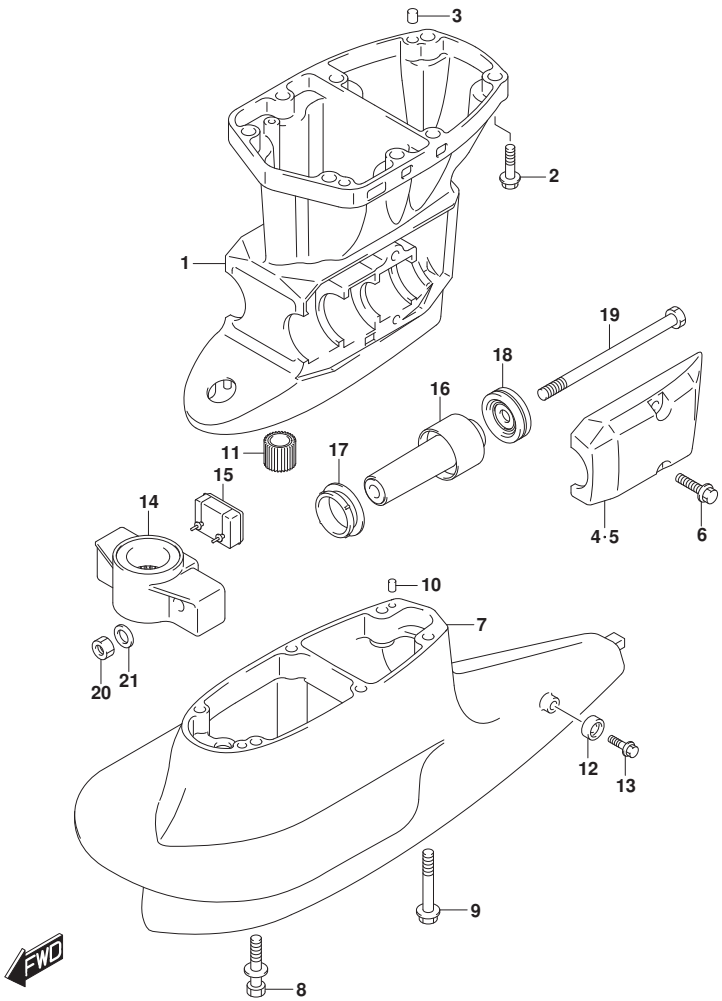

FIG.405H (1-L-7) DRIVE SHAFT HOUSING (DF60AVT E01)(DF60AVT E40)

REF NO.	PART NO.	DESCRIPTION	Q'TY	REMARKS
1-1	52111-88L20-YAY	HOUSING, DRIVE SHAFT (S) (BLACK)	1	W/TRANSOM(L)
1-2	52111-88L30-YAY	HOUSING, DRIVE SHAFT (L) (BLACK)	1	W/TRANSOM(X)
2	09116-10181	BOLT (10X44)	8	
3	09202-08006	PIN (8X12)	2	
4	54221-88L20-YAY	COVER, LOWER MOUNT STBD (BLACK)	1	
5	54231-88L10-YAY	COVER, LOWER MOUNT PORT (BLACK)	1	
6	09116-10181	BOLT (10X44)	4	
7	52131-88L11-YAY	CASE, EXTENSION (BLACK)	1	
8	09116-08131	BOLT (8X45)	4	
9	09116-10150	BOLT (10X55)	2	
10	09202-06031	PIN (6X12)	2	
11	57130-94301	BUSH, DRIVE SHAFT	1	W/TRANSOM(X)
12	55321-87J01	ANODE, PROTECTION	1	
13	09103-06281	BOLT (6X14)	1	
14	54211-87J30-YAY	BRACKET, LOWER MOUNT (BLACK)	1	
15	54151-88L00	MOUNT, LOWER THRUST	1	
16	54160-88L10	MOUNT, LOWER	2	
17	54167-87L01	MOUNT, LOWER SIDE	2	
18	54180-88L00	DAMPER, FWD STOPPER	2	
19	54166-95J02	BOLT, LOWER MOUNT	2	
20	09159-12014	NUT	2	
21	09160-12110	WASHER (12.5X22X3)	2	

DF60AVT E01
DF60AVT E40

FIG.405J

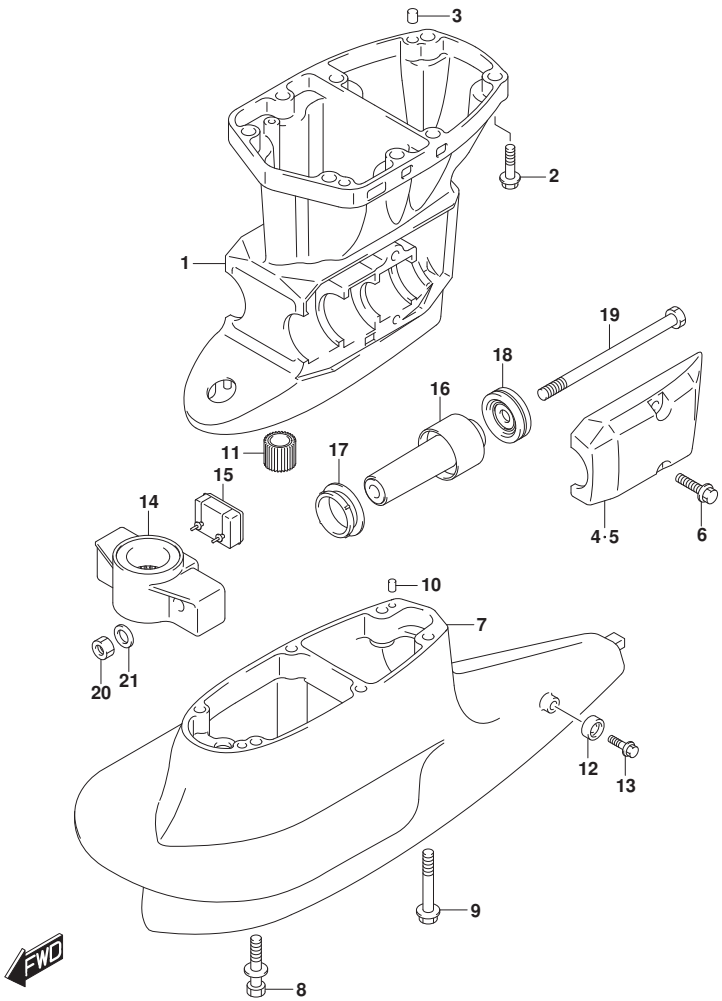

FIG.405J (1-L-8) DRIVE SHAFT HOUSING (DF60AVTH E01)(DF60AVTH E40)

REF NO.	PART NO.	DESCRIPTION	Q'TY	REMARKS
1-1	52111-88L20-YAY	HOUSING, DRIVE SHAFT (S) (BLACK)	1	W/TRANSOM(L)
1-2	52111-88L30-YAY	HOUSING, DRIVE SHAFT (L) (BLACK)	1	W/TRANSOM(X)
2	09116-10181	BOLT (10X44)	8	
3	09202-08006	PIN (8X12)	2	
4	54221-88L20-YAY	COVER, LOWER MOUNT STBD (BLACK)	1	
5	54231-88L10-YAY	COVER, LOWER MOUNT PORT (BLACK)	1	
6	09116-10181	BOLT (10X44)	4	
7	52131-88L11-YAY	CASE, EXTENSION (BLACK)	1	
8	09116-08131	BOLT (8X45)	4	
9	09116-10150	BOLT (10X55)	2	
10	09202-06031	PIN (6X12)	2	
11	57130-94301	BUSH, DRIVE SHAFT	1	W/TRANSOM(X)
12	55321-87J01	ANODE, PROTECTION	1	
13	09103-06281	BOLT (6X14)	1	
14	54211-87J30-YAY	BRACKET, LOWER MOUNT (BLACK)	1	
15	54151-88L00	MOUNT, LOWER THRUST	1	
16	54160-88L10	MOUNT, LOWER	2	
17	54167-87L01	MOUNT, LOWER SIDE	2	
18	54180-88L00	DAMPER, FWD STOPPER	2	
19	54166-95J02	BOLT, LOWER MOUNT	2	
20	09159-12014	NUT	2	
21	09160-12110	WASHER (12.5X22X3)	2	

DF60AVTH E01
DF60AVTH E40

FIG.407A

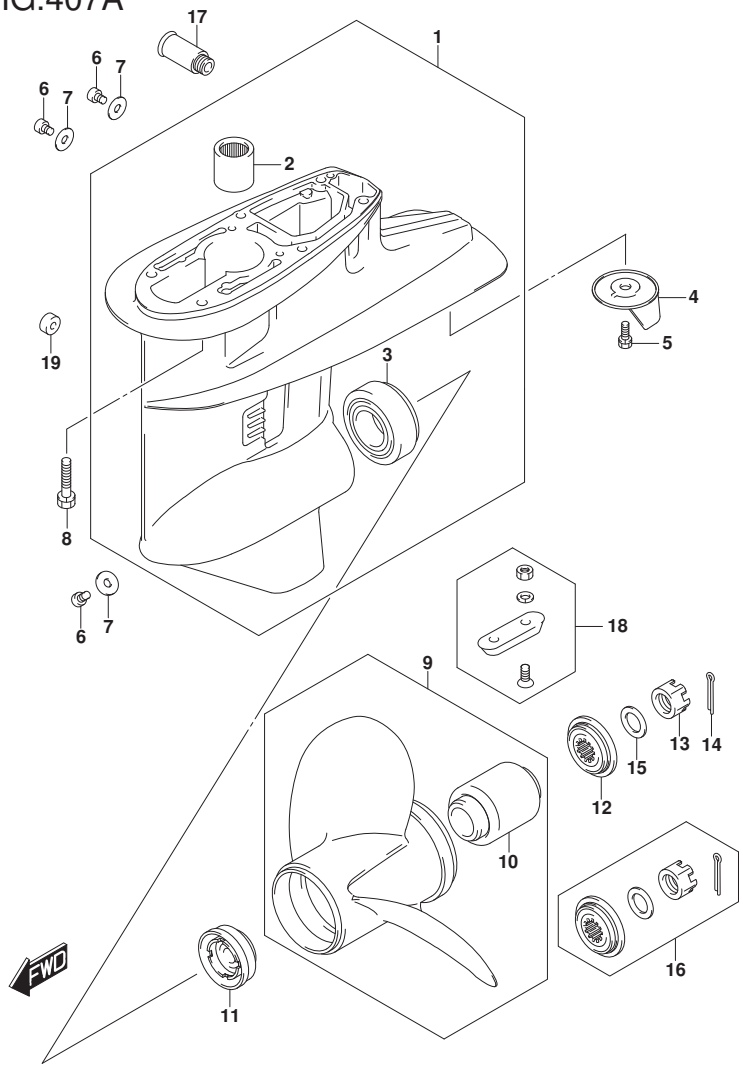

FIG.407A (1-L-9) GEAR CASE (DF40A E01)(DF40AST E34)(DF50A E01)

REF NO.	PART NO.	DESCRIPTION	Q'TY	REMARKS
1-1	55100-87J50-YAY	CASE ASSY, GEAR (BLACK)	1	
1-2	55100-87J50-Y5S	CASE ASSY, GEAR (WHITE)	1	
2	09263-22039	.BEARING (22X30X30)	1	
3	09265-30004	.BEARING (30X62X17.25)	1	
4	55125-94400	TAB, TRIM	1	
5	09117-08109	BOLT (8X16)	1	
6	09248-10008	PLUG (10X7.5)	3	
7	09168-10022	GASKET (10X17X1.5)	3	
8	09116-08131	BOLT (8X45)	6	
9-1	58100-88L03-019	PROPELLER (3X11-1/2X9) (BLACK)	1	
9-2	58100-88L13-019	PROPELLER (3X11-1/2X10) (BLACK)	1	
9-3	58100-88L23-019	PROPELLER (3X11-1/2X11) (BLACK)	1	
9-4	58100-88LA0-019	PROPELLER (3X11-5/8X12) (BLACK)	1	
9-5	58100-88LB0-019	PROPELLER (3X11-1/2X13) (BLACK)	1	
9-6	58100-88L52-019	PROPELLER (3X11-3/8X14) (BLACK)	1	
9-7	58100-88L62-019	PROPELLER (3X11-1/4X15) (BLACK)	1	
9-8	58100-88L72-019	PROPELLER (3X11-1/8X16) (BLACK)	1	
9-9	58100-88L83-019	PROPELLER (3X11X17) (BLACK)	1	
9-10	58200-88L30	PROPELLER (3X11-1/2X16)	1	OPT
10	58120-88L01	.BUSH, PROPELLER	1	
11	57632-95320	STOPPER, PROPELLER BUSH	1	
12	57633-94301	SPACER, PROPELLER NUT	1	
13	09141-18005	NUT	1	
14	09204-03003	COTTER PIN (D:3.6,L:25)	1	

DF60A_E01_018_407A
GEAR CASE

FIG.407A

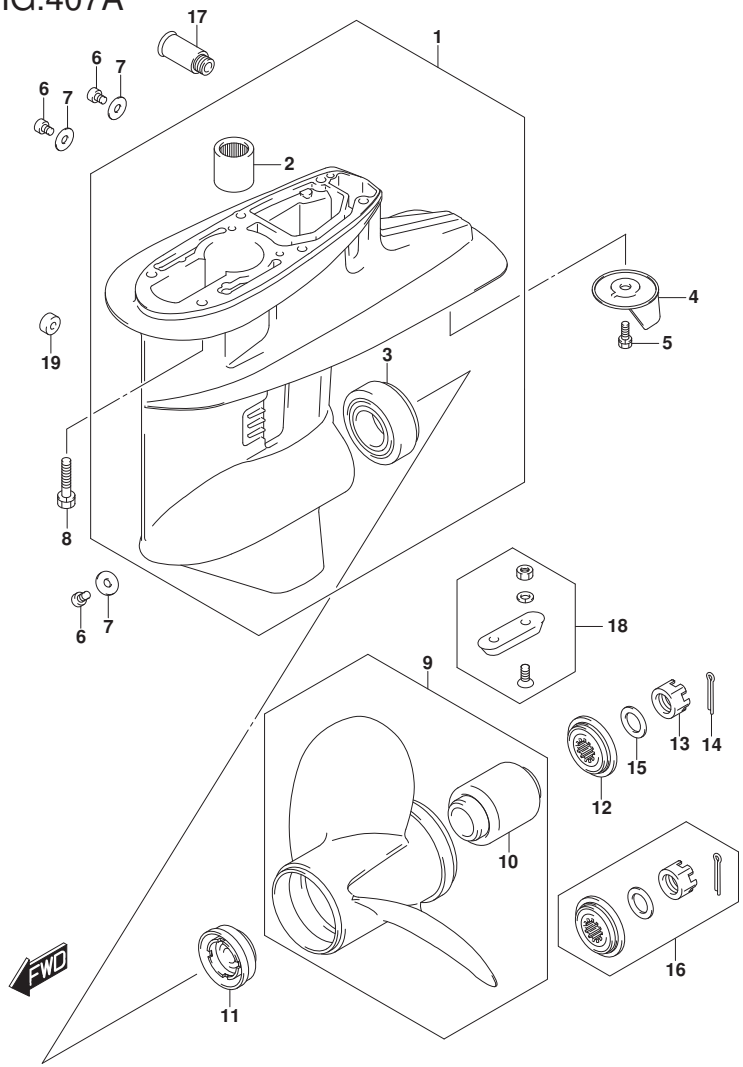

FIG.407A (1-L-10) GEAR CASE (DF40A E01)(DF40AST E34)(DF50A E01)

REF NO.	PART NO.	DESCRIPTION	Q'TY	REMARKS
15	09160-18028	WASHER (18.5X31X1)	1	
16	57630-94301	KIT, PROPELLER NUT	1	OPT
17	55181-95200	ATTACHMENT, FLUSH HOSE	1	OPT
18	55300-95500	ZINC ASSY, PROTECTION	1	OPT
19	55321-87J11	ANODE (MAGNESIUM)	1	OPT
20	25700-88L00	SEALING KIT, GEAR CASE	1	OPT
				NOT ILLUSTRATED

DF40A E01
DF40AST E34
DF50A E01

DF60A_E01_018_407A
GEAR CASE

FIG.407B

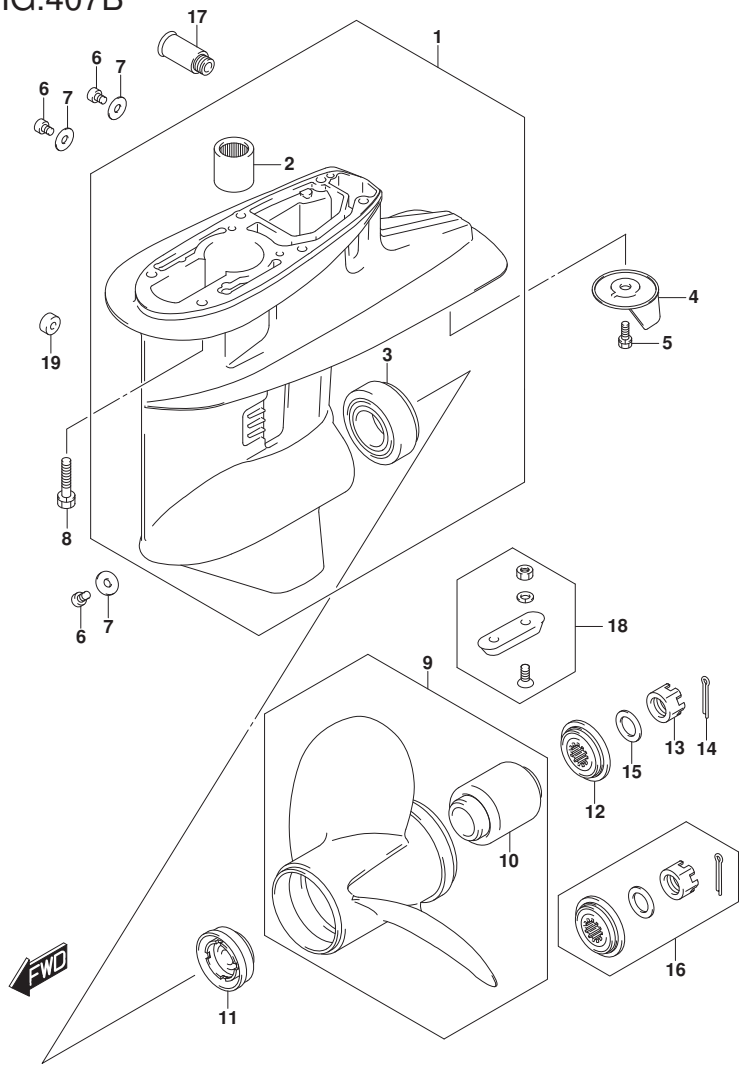

FIG.407B (1-L-11) GEAR CASE (DF40AQH E01)(DF40ATH E01)(DF50ATH E01)

REF NO.	PART NO.	DESCRIPTION	Q'TY	REMARKS
1	55100-87J50-YAY	CASE ASSY, GEAR (BLACK)	1	
2	09263-22039	.BEARING (22X30X30)	1	
3	09265-30004	.BEARING (30X62X17.25)	1	
4	55125-94400	TAB, TRIM	1	
5	09117-08109	BOLT (8X16)	1	
6	09248-10008	PLUG (10X7.5)	3	
7	09168-10022	GASKET (10X17X1.5)	3	
8	09116-08131	BOLT (8X45)	6	
9-1	58100-88L03-019	PROPELLER (3X11-1/2X9) (BLACK)	1	
9-2	58100-88L13-019	PROPELLER (3X11-1/2X10) (BLACK)	1	
9-3	58100-88L23-019	PROPELLER (3X11-1/2X11) (BLACK)	1	
9-4	58100-88LA0-019	PROPELLER (3X11-5/8X12) (BLACK)	1	
9-5	58100-88LB0-019	PROPELLER (3X11-1/2X13) (BLACK)	1	
9-6	58100-88L52-019	PROPELLER (3X11-3/8X14) (BLACK)	1	
9-7	58100-88L62-019	PROPELLER (3X11-1/4X15) (BLACK)	1	
9-8	58100-88L72-019	PROPELLER (3X11-1/8X16) (BLACK)	1	
9-9	58100-88L83-019	PROPELLER (3X11X17) (BLACK)	1	
9-10	58200-88L30	PROPELLER (3X11-1/2X16)	1	OPT
10	58120-88L01	.BUSH, PROPELLER	1	
11	57632-95320	STOPPER, PROPELLER BUSH	1	
12	57633-94301	SPACER, PROPELLER NUT	1	
13	09141-18005	NUT	1	
14	09204-03003	COTTER PIN (D:3.6,L:25)	1	
15	09160-18028	WASHER (18.5X31X1)	1	

FIG.407B

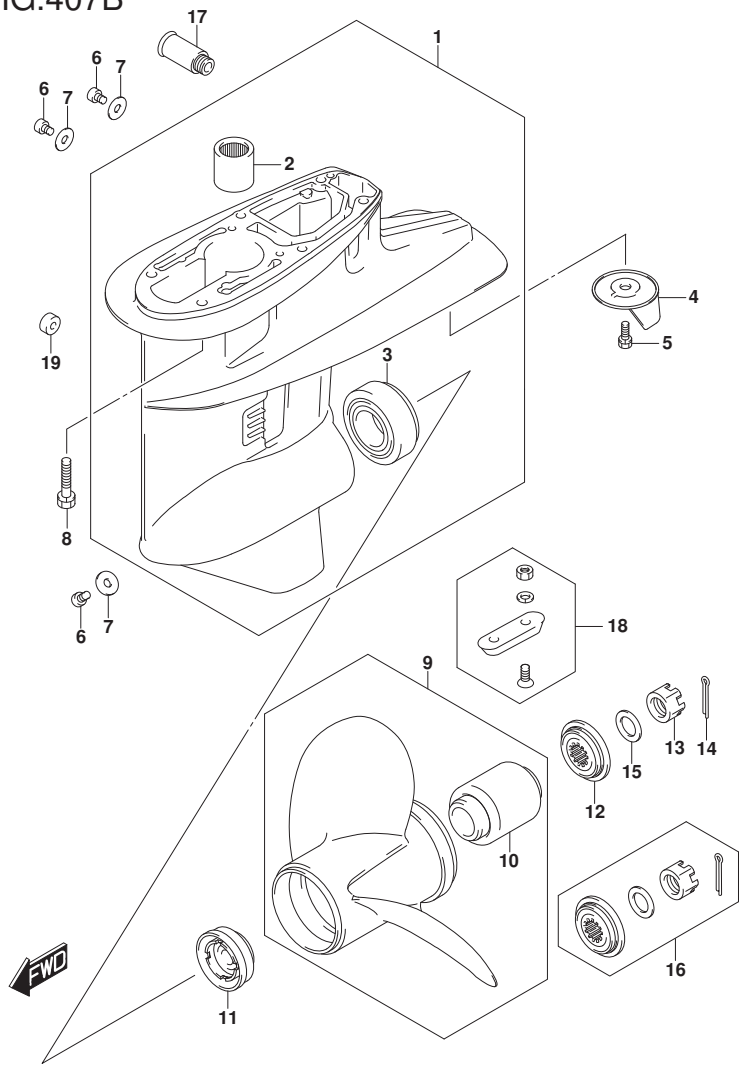

FIG.407B (1-L-12) GEAR CASE (DF40AQH E01)(DF40ATH E01)(DF50ATH E01)

REF NO.	PART NO.	DESCRIPTION	Q'TY	REMARKS
16	57630-94301	KIT, PROPELLER NUT	1	OPT
17	55181-95200	ATTACHMENT, FLUSH HOSE	1	OPT
18	55300-95500	ZINC ASSY, PROTECTION	1	OPT
19	55321-87J11	ANODE (MAGNESIUM)	1	OPT
20	25700-88L00	SEALING KIT, GEAR CASE	1	OPT
				NOT ILLUSTRATED

DF40AQH E01
DF40ATH E01
DF50ATH E01

DF60A_E01_018_407B
GEAR CASE

FIG.407C

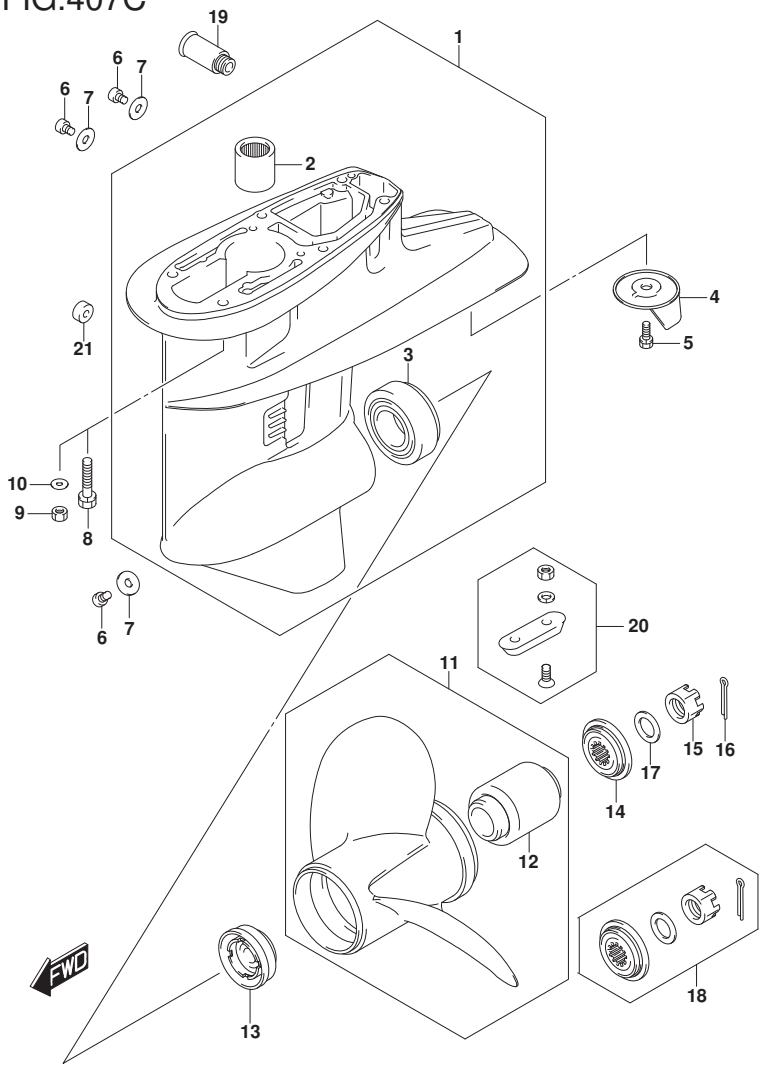

FIG.407C (1-L-13) GEAR CASE (DF60A E01)

REF NO.	PART NO.	DESCRIPTION	Q'TY	REMARKS
1-1	55100-87J50-YAY	CASE ASSY, GEAR (BLACK)	1	
1-2	55100-87J50-Y5S	CASE ASSY, GEAR (WHITE)	1	
2	09263-22039	.BEARING (22X30X30)	1	
3	09265-30004	.BEARING (30X62X17.25)	1	
4	55125-94400	TAB, TRIM	1	
5	09117-08109	BOLT (8X16)	1	
6	09248-10008	PLUG (10X7.5)	3	
7	09168-10022	GASKET (10X17X1.5)	3	
8	09116-08131	BOLT (8X45)	6	W/TRANSOM(S) W/TRANSOM(L)
9	09140-08023-XC0	NUT	6	W/TRANSOM(X)
10	09160-08082	WASHER (8.5X16X1.2)	6	W/TRANSOM(X)
11-1	58100-88L03-019	PROPELLER (3X11-1/2X9) (BLACK)	1	
11-2	58100-88L13-019	PROPELLER (3X11-1/2X10) (BLACK)	1	
11-3	58100-88L23-019	PROPELLER (3X11-1/2X11) (BLACK)	1	
11-4	58100-88LA0-019	PROPELLER (3X11-5/8X12) (BLACK)	1	
11-5	58100-88LB0-019	PROPELLER (3X11-1/2X13) (BLACK)	1	
11-6	58100-88L52-019	PROPELLER (3X11-3/8X14) (BLACK)	1	
11-7	58100-88L62-019	PROPELLER (3X11-1/4X15) (BLACK)	1	
11-8	58100-88L72-019	PROPELLER (3X11-1/8X16) (BLACK)	1	
11-9	58100-88L83-019	PROPELLER (3X11X17) (BLACK)	1	
11-10	58200-88L30	PROPELLER (3X11-1/2X16)	1	OPT
12	58120-88L01	.BUSH, PROPELLER	1	
13	57632-95320	STOPPER, PROPELLER BUSH	1	
14	57633-94301	SPACER, PROPELLER NUT	1	
15	09141-18005	NUT	1	

DF60A_E01_018_407C
GEAR CASE

FIG.407C

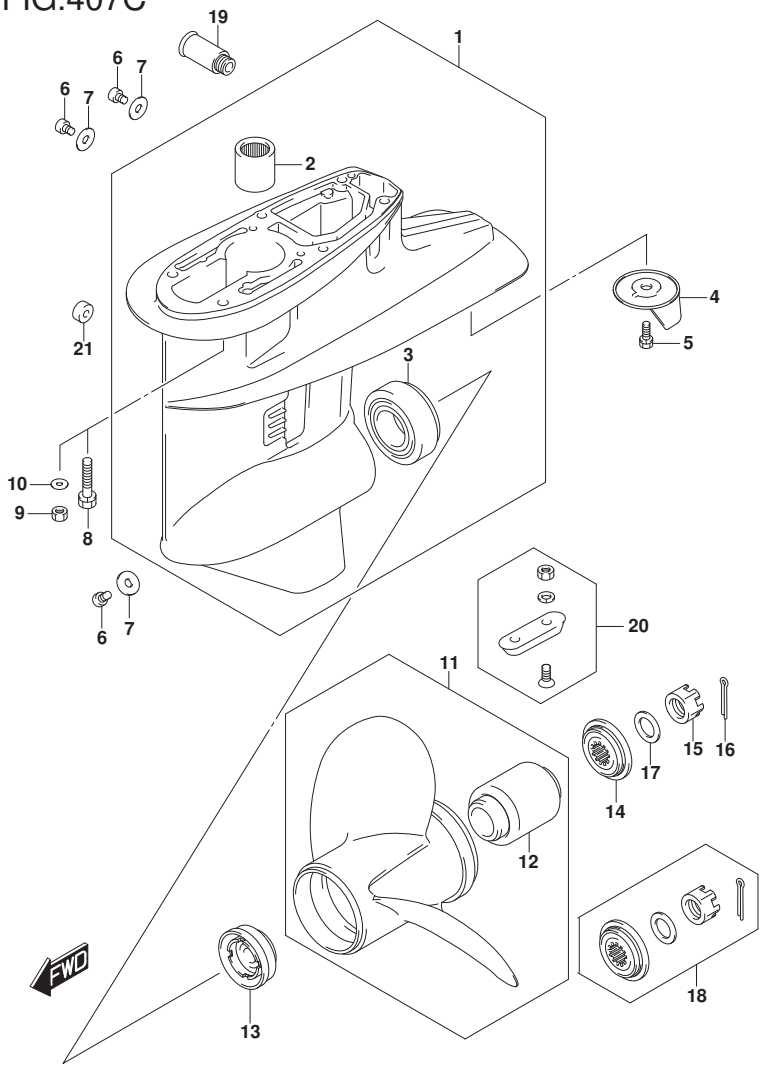

FIG.407C (1-L-14) GEAR CASE (DF60A E01)

REF NO.	PART NO.	DESCRIPTION	Q'TY	REMARKS
16	09204-03003	COTTER PIN (D:3.6,L:25)	1	
17	09160-18028	WASHER (18.5X31X1)	1	
18	57630-94301	KIT, PROPELLER NUT	1	OPT
19	55181-95200	ATTACHMENT, FLUSH HOSE	1	OPT
20	55300-95500	ZINC ASSY, PROTECTION	1	OPT
21	55321-87J11	ANODE (MAGNESIUM)	1	OPT
22	25700-88L00	SEALING KIT, GEAR CASE	1	OPT
				NOT ILLUSTRATED

DF60A E01

DF60A_E01_018_407C
GEAR CASE

FIG.407D

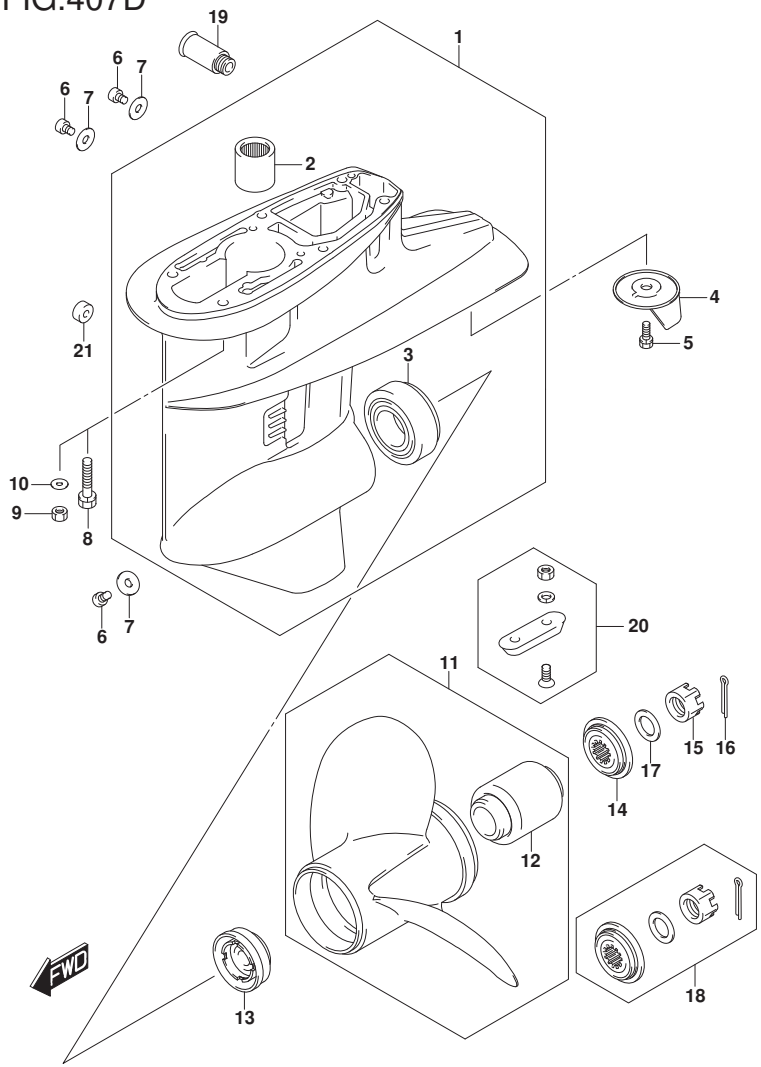

FIG.407D (1-L-15) GEAR CASE (DF60AQH E01)(DF60AQH E40)(DF60ATH E01)(DF60ATH

REF NO.	PART NO.	DESCRIPTION	Q'TY	REMARKS
1	55100-87J50-YAY	CASE ASSY, GEAR (BLACK)	1	
2	09263-22039	.BEARING (22X30X30)	1	
3	09265-30004	.BEARING (30X62X17.25)	1	
4	55125-94400	TAB, TRIM	1	
5	09117-08109	BOLT (8X16)	1	
6	09248-10008	PLUG (10X7.5)	3	
7	09168-10022	GASKET (10X17X1.5)	3	
8	09116-08131	BOLT (8X45)	6	W/TRANSOM(L)
9	09140-08023-XC0	NUT	6	W/TRANSOM(X)
10	09160-08082	WASHER (8.5X16X1.2)	6	W/TRANSOM(X)
11-1	58100-88L03-019	PROPELLER (3X11-1/2X9) (BLACK)	1	
11-2	58100-88L13-019	PROPELLER (3X11-1/2X10) (BLACK)	1	
11-3	58100-88L23-019	PROPELLER (3X11-1/2X11) (BLACK)	1	
11-4	58100-88LA0-019	PROPELLER (3X11-5/8X12) (BLACK)	1	
11-5	58100-88LB0-019	PROPELLER (3X11-1/2X13) (BLACK)	1	
11-6	58100-88L52-019	PROPELLER (3X11-3/8X14) (BLACK)	1	
11-7	58100-88L62-019	PROPELLER (3X11-1/4X15) (BLACK)	1	
11-8	58100-88L72-019	PROPELLER (3X11-1/8X16) (BLACK)	1	
11-9	58100-88L83-019	PROPELLER (3X11X17) (BLACK)	1	
11-10	58200-88L30	PROPELLER (3X11-1/2X16)	1	OPT
12	58120-88L01	.BUSH, PROPELLER	1	
13	57632-95320	STOPPER, PROPELLER BUSH	1	
14	57633-94301	SPACER, PROPELLER NUT	1	

DF60A_E01_018_407D
GEAR CASE

FIG.407D

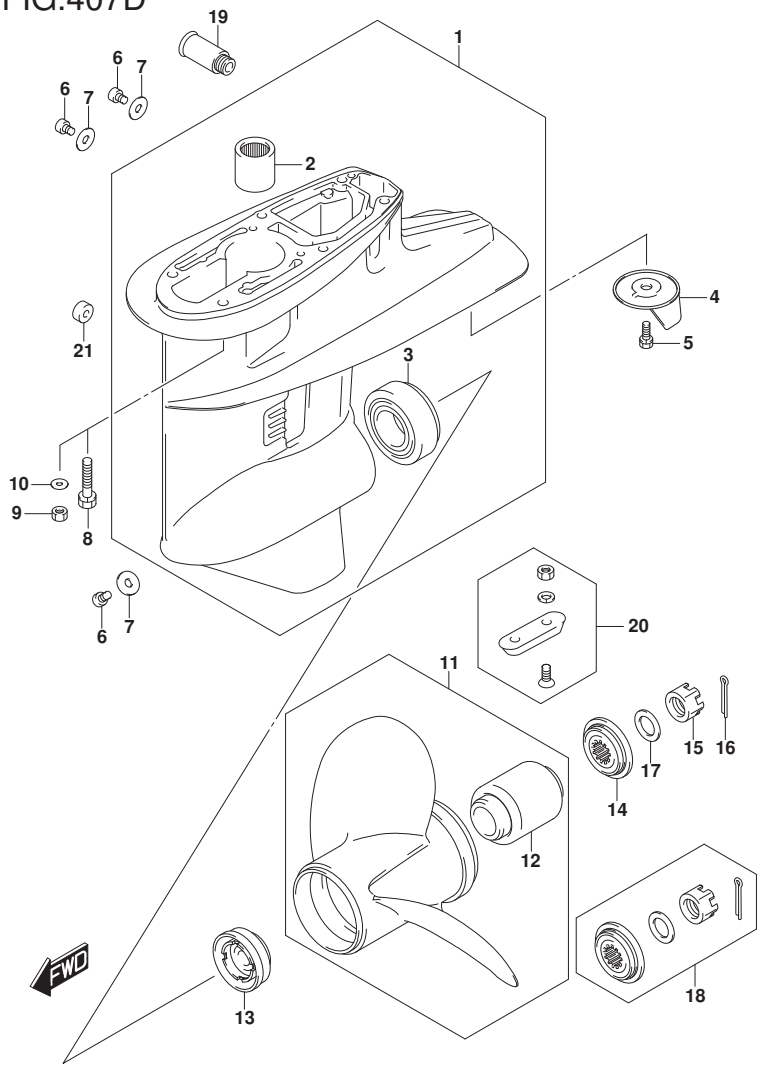

FIG.407D (2-B-2) GEAR CASE (DF60AQH E01)(DF60AQH E40)(DF60ATH E01)(DF60ATH

REF NO.	PART NO.	DESCRIPTION	Q'TY	REMARKS
15	09141-18005	NUT	1	
16	09204-03003	COTTER PIN (D:3.6,L:25)	1	
17	09160-18028	WASHER (18.5X31X1)	1	
18	57630-94301	KIT, PROPELLER NUT	1	OPT
19	55181-95200	ATTACHMENT, FLUSH HOSE	1	OPT
20	55300-95500	ZINC ASSY, PROTECTION	1	OPT
21	55321-87J11	ANODE (MAGNESIUM)	1	OPT
22	25700-88L00	SEALING KIT, GEAR CASE	1	OPT
				NOT ILLUSTRATED

DF60AQH E01
DF60AQH E40
DF60ATH E01
DF60ATH E40

DF60A_E01_018_407D
GEAR CASE

FIG.407E

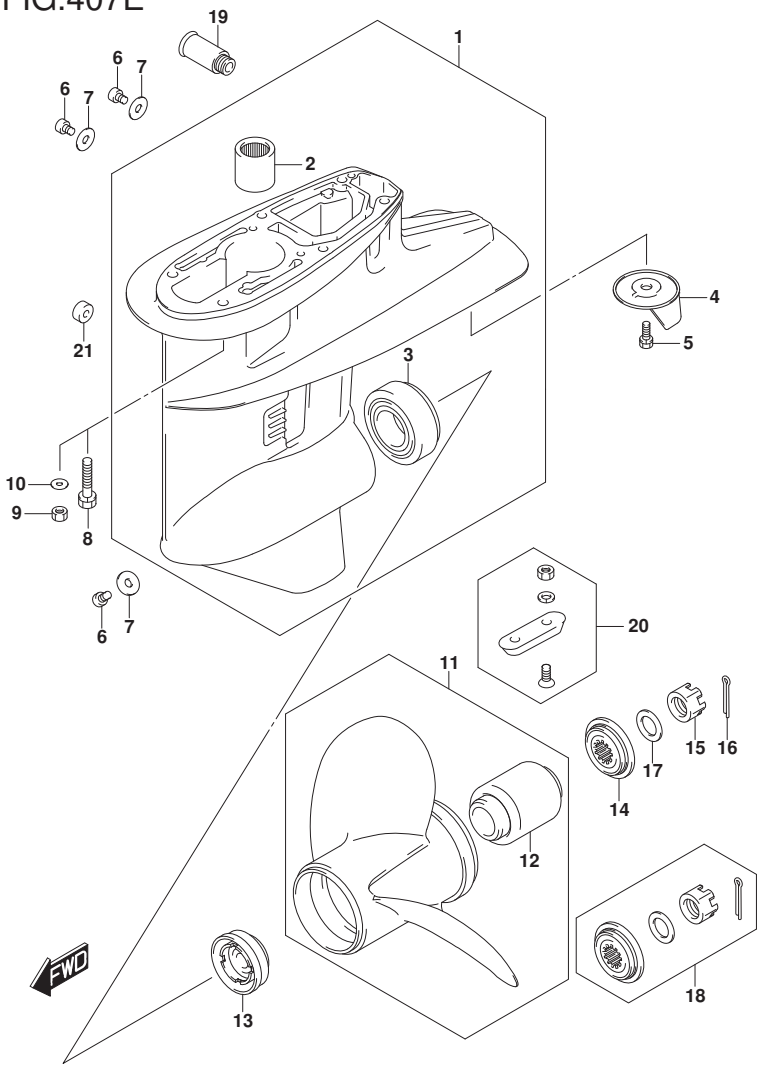

FIG.407E (2-B-3) GEAR CASE (DF60A E40)

REF NO.	PART NO.	DESCRIPTION	Q'TY	REMARKS
1-1	55100-87J50-YAY	CASE ASSY, GEAR (BLACK)	1	
1-2	55100-87J50-Y5S	CASE ASSY, GEAR (WHITE)	1	
2	09263-22039	.BEARING (22X30X30)	1	
3	09265-30004	.BEARING (30X62X17.25)	1	
4	55125-94400	TAB, TRIM	1	
5	09117-08109	BOLT (8X16)	1	
6	09248-10008	PLUG (10X7.5)	3	
7	09168-10022	GASKET (10X17X1.5)	3	
8	09116-08131	BOLT (8X45)	6	W/TRANSOM(L)
9	09140-08023-XC0	NUT	6	W/TRANSOM(X)
10	09160-08082	WASHER (8.5X16X1.2)	6	W/TRANSOM(X)
11-1	58100-88L03-019	PROPELLER (3X11-1/2X9) (BLACK)	1	
11-2	58100-88L13-019	PROPELLER (3X11-1/2X10) (BLACK)	1	
11-3	58100-88L23-019	PROPELLER (3X11-1/2X11) (BLACK)	1	
11-4	58100-88LA0-019	PROPELLER (3X11-5/8X12) (BLACK)	1	
11-5	58100-88LB0-019	PROPELLER (3X11-1/2X13) (BLACK)	1	
11-6	58100-88L52-019	PROPELLER (3X11-3/8X14) (BLACK)	1	
11-7	58100-88L62-019	PROPELLER (3X11-1/4X15) (BLACK)	1	
11-8	58100-88L72-019	PROPELLER (3X11-1/8X16) (BLACK)	1	
11-9	58100-88L83-019	PROPELLER (3X11X17) (BLACK)	1	
11-10	58200-88L30	PROPELLER (3X11-1/2X16)	1	OPT
12	58120-88L01	.BUSH, PROPELLER	1	
13	57632-95320	STOPPER, PROPELLER BUSH	1	
14	57633-94301	SPACER, PROPELLER NUT	1	
15	09141-18005	NUT	1	
16	09204-03003	COTTER PIN (D:3.6,L:25)	1	

FIG.407E

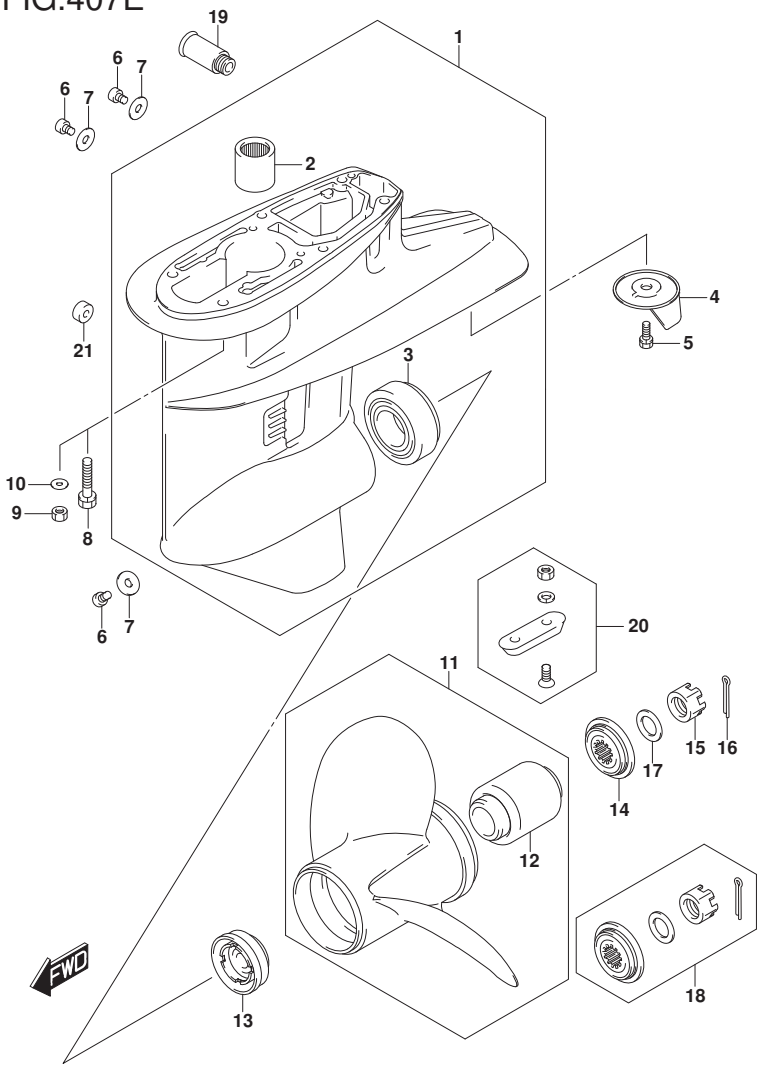

FIG.407E (2-B-4) GEAR CASE (DF60A E40)

REF NO.	PART NO.	DESCRIPTION	Q'TY	REMARKS
17	09160-18028	WASHER (18.5X31X1)	1	
18	57630-94301	KIT, PROPELLER NUT	1	OPT
19	55181-95200	ATTACHMENT, FLUSH HOSE	1	OPT
20	55300-95500	ZINC ASSY, PROTECTION	1	OPT
21	55321-87J11	ANODE (MAGNESIUM)	1	OPT
22	25700-88L00	SEALING KIT, GEAR CASE	1	OPT
				NOT ILLUSTRATED

DF60A E40

DF60A_E01_018_407E
GEAR CASE

FIG.407F

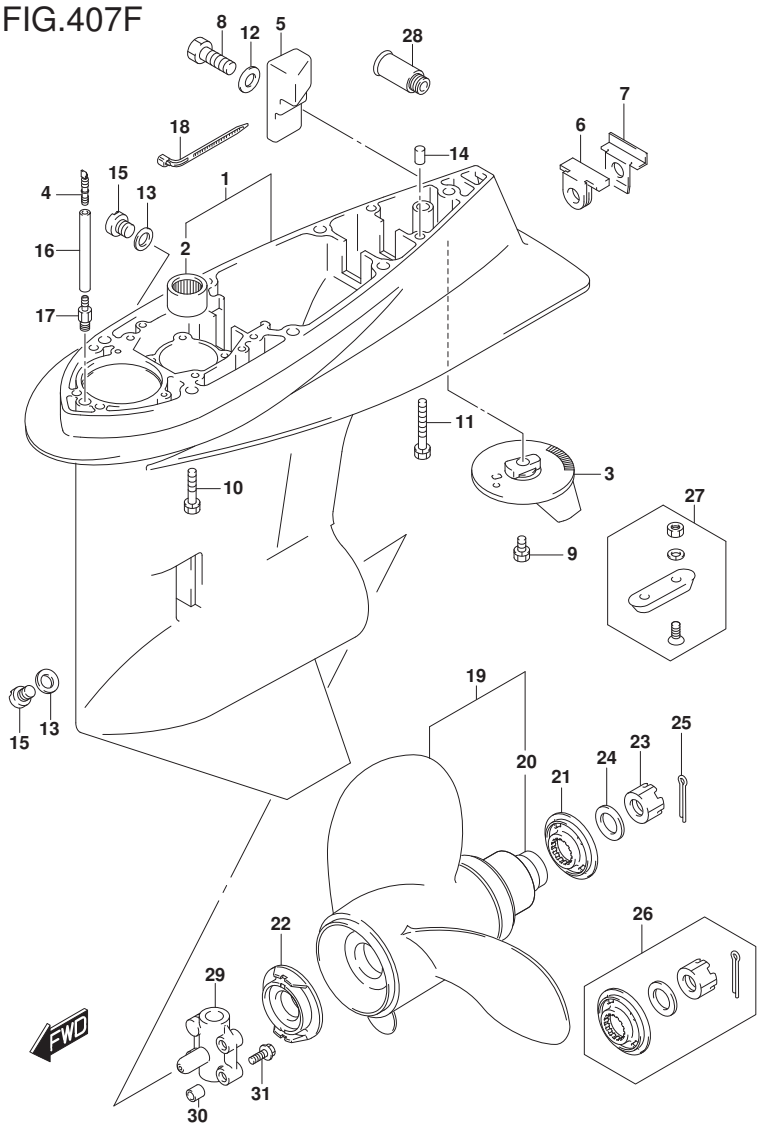

FIG.407F (2-B-5) GEAR CASE (DF50AVT E01)(DF50AVTH E01)

REF NO.	PART NO.	DESCRIPTION	Q'TY	REMARKS
1	55110-90J15-YAY	CASE, GEAR (BLACK)	1	
2	09263-28016	.BEARING (28.6X38X31.8)	1	
3	55125-90J01	TAB, TRIM	1	
4	55127-87D00	UNION, SPEEDOMETER HOSE	1	
5	55321-90J01	ANODE, GEAR CASE	1	
6	55332-87D11	RUBBER, EXHAUST SEAL	1	
7	55333-87D10	PLATE, EXHAUST SEAL	1	
8	09100-06131	BOLT (6X12)	1	
9	09116-08137	BOLT (8X22)	1	
10	09116-10150	BOLT (10X55)	6	
11	09117-10039	BOLT (10X80)	1	
12	09160-06085	WASHER (6.5X15X1)	1	
13	09168-10022	GASKET (10X17X1.5)	2	
14	09202-08006	PIN (8X12)	2	
15	09248-10008	PLUG (10X7.5)	2	
16	09355-40805-600	HOSE (4X8X600)	1	L:600->70
17	09362-09008	UNION	1	
18	09407-10404	CLAMP (L:100)	2	
19-1	58100-87LA0-019	PROPELLER (3X14X13) (BLACK)	1	
19-2	58100-87LB0-019	PROPELLER (3X13.875X15) (BLACK)	1	
19-3	58100-87LC0-019	PROPELLER (3X13.75X17) (BLACK)	1	
19-4	58100-87LJ0-019	PROPELLER (3X13.75X12) (BLACK)	1	
19-5	58100-87LH0-019	PROPELLER (3X14X11) (BALCK)	1	
19-6	58100-87LG1-019	PROPELLER (3X14X9) (BALCK)	1	
20	58105-90J00	.BUSH	1	
21	57633-90J02	SPACER, PROPELLER NUT	1	
22	57635-90J01	STOPPER, PROPELLER BUSH	1	
23	09141-18005	NUT	1	

DF60A_E01_018_407F
GEAR CASE

FIG.407F

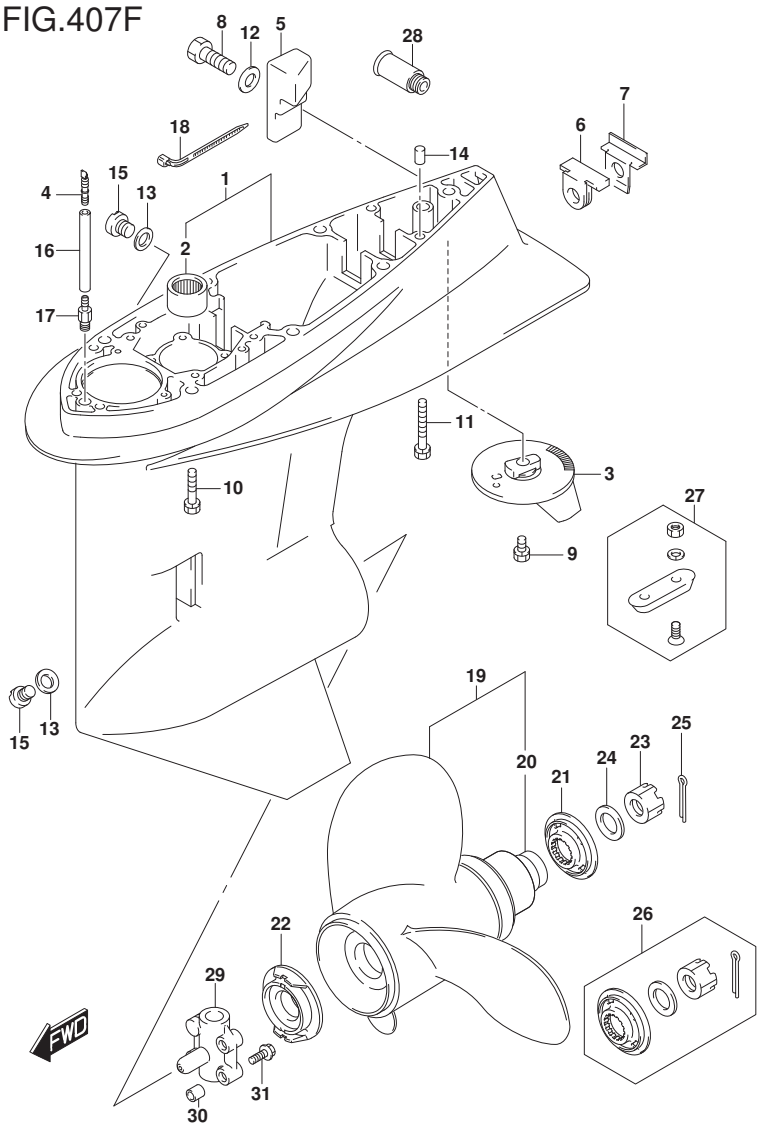

FIG.407F (2-B-6) GEAR CASE (DF50AVT E01)(DF50AVTH E01)

REF NO.	PART NO.	DESCRIPTION	Q'TY	REMARKS
24	09160-18028	WASHER (18.5X31X1)	1	
25	09204-03003	COTTER PIN (D:3.6,L:25)	1	
26	57630-90J00	KIT, PROPELLER NUT	1	OPT
27	55300-95500	ZINC ASSY, PROTECTION	1	OPT
28	55181-95200	ATTACHMENT, FLUSH HOSE	1	OPT
29	56145-99E01	HOUSING, SHIFT CAM	1	
30	09206-09012	PIN (7.4X9X10)	2	
31	01550-0630C	BOLT	3	
32	25700-99E00	SEALING KIT, GEAR CASE	1	OPT
				NOT ILLUSTRATED

DF50AVT E01
DF50AVTH E01

DF60A_E01_018_407F
GEAR CASE

FIG.407G

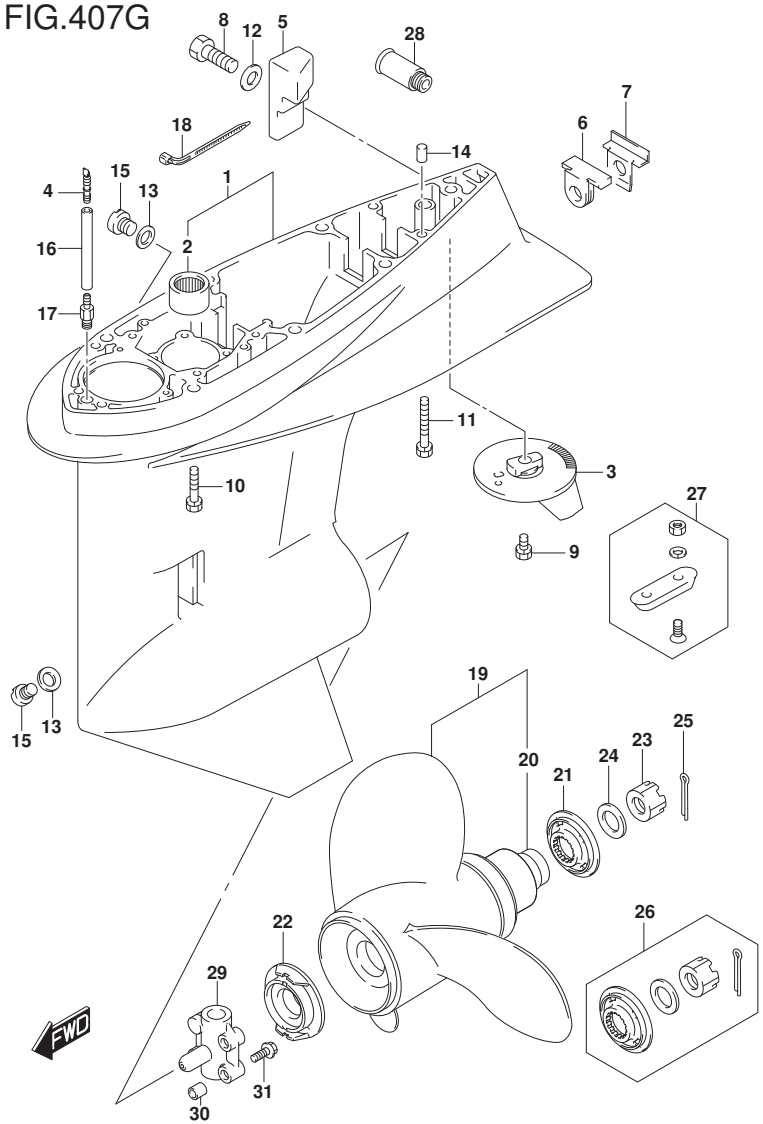

DF60A_E01_018_407G
GEAR CASE

FIG.407G (2-B-7) GEAR CASE (DF60AVT E01)(DF60AVT E40)(DF60AVTH E01)(DF60AVT

REF NO.	PART NO.	DESCRIPTION	Q'TY	REMARKS
1	55110-90J15-YAY	CASE, GEAR (BLACK)	1	
2	09263-28016	.BEARING (28.6X38X31.8)	1	
3	55125-90J01	TAB, TRIM	1	
4	55127-87D00	UNION, SPEEDOMETER HOSE	1	
5	55321-90J01	ANODE, GEAR CASE	1	
6	55332-87D11	RUBBER, EXHAUST SEAL	1	
7	55333-87D10	PLATE, EXHAUST SEAL	1	
8	09100-06131	BOLT (6X12)	1	
9	09116-08137	BOLT (8X22)	1	
10	09116-10150	BOLT (10X55)	6	
11	09117-10039	BOLT (10X80)	1	
12	09160-06085	WASHER (6.5X15X1)	1	
13	09168-10022	GASKET (10X17X1.5)	2	
14	09202-08006	PIN (8X12)	2	
15	09248-10008	PLUG (10X7.5)	2	
16	09355-40805-600	HOSE (4X8X600)	1	L:600->70
17	09362-09008	UNION	1	
18	09407-10404	CLAMP (L:100)	2	
19-1	58100-87LA0-019	PROPELLER (3X14X13) (BLACK)	1	
19-2	58100-87LB0-019	PROPELLER (3X13.875X15) (BLACK)	1	
19-3	58100-87LC0-019	PROPELLER (3X13.75X17) (BLACK)	1	
19-4	58100-87LJ0-019	PROPELLER (3X13.75X12) (BLACK)	1	
19-5	58100-87LH0-019	PROPELLER (3X14X11) (BALCK)	1	
19-6	58100-87LG1-019	PROPELLER (3X14X9) (BALCK)	1	
20	58105-90J00	.BUSH	1	
21	57633-90J02	SPACER, PROPELLER NUT	1	

FIG.407G

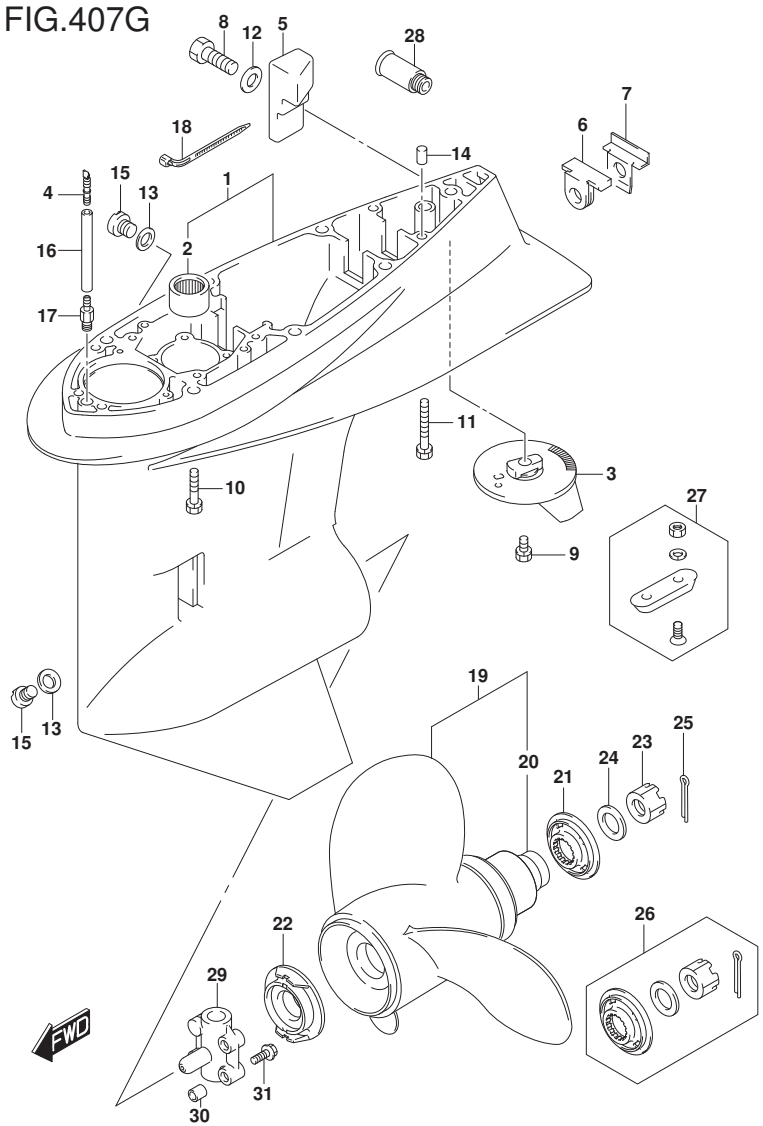

DF60A_E01_018_407G
GEAR CASE

FIG.407G (2-B-8) GEAR CASE (DF60AVT E01)(DF60AVT E40)(DF60AVTH E01)(DF60AVT

REF NO.	PART NO.	DESCRIPTION	Q'TY	REMARKS
22	57635-90J01	STOPPER, PROPELLER BUSH	1	
23	09141-18005	NUT	1	
24	09160-18028	WASHER (18.5X31X1)	1	
25	09204-03003	COTTER PIN (D:3.6,L:25)	1	
26	57630-90J00	KIT, PROPELLER NUT	1	OPT
27	55300-95500	ZINC ASSY, PROTECTION	1	OPT
28	55181-95200	ATTACHMENT, FLUSH HOSE	1	OPT
29	56145-99E01	HOUSING, SHIFT CAM	1	
30	09206-09012	PIN (7.4X9X10)	2	
31	01550-0630C	BOLT	3	
32	25700-99E00	SEALING KIT, GEAR CASE	1	OPT
				NOT ILLUSTRATED

DF60AVT E01
DF60AVT E40
DF60AVTH E01
DF60AVTH E40

FIG.410A

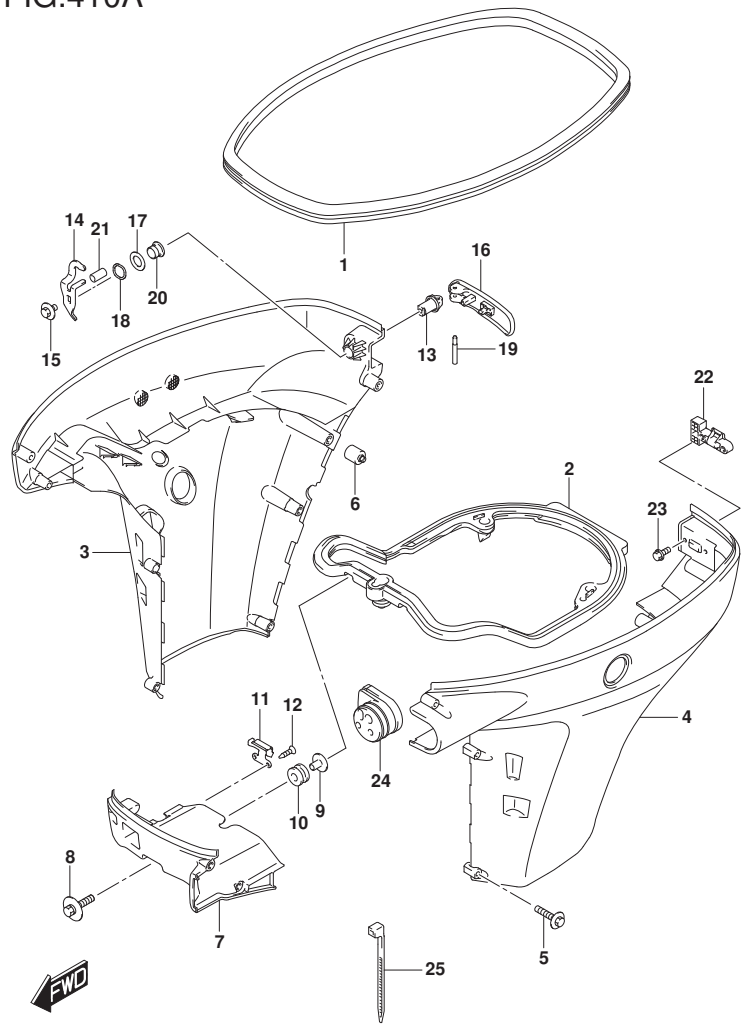

FIG.410A (2-B-9) SIDE COVER (DF40A E01)(DF40AST E34)(DF50A E01)

REF NO.	PART NO.	DESCRIPTION	Q'TY	REMARKS
1	61112-88L10	RUBBER, SIDE COVER	1	
2	61134-88L10	SEAL, SIDE COVER	1	
3-1	61811-88L30-YAY	COVER, SIDE STBD (S) (BLACK)	1	W/TRANSOM(S)
3-2	61811-88L30-Y5S	COVER, SIDE STBD (S) (WHITE)	1	W/TRANSOM(S)
3-3	61811-88L20-YAY	COVER, SIDE STBD (BLACK)	1	W/TRANSOM(L)
3-4	61811-88L20-Y5S	COVER, SIDE STBD (WHITE)	1	W/TRANSOM(L)
4-1	61821-88L30-YAY	COVER, SIDE PORT (S) (BLACK)	1	W/TRANSOM(S)
4-2	61821-88L30-Y5S	COVER, SIDE PORT (S) (WHITE)	1	W/TRANSOM(S)
4-3	61821-88L20-YAY	COVER, SIDE PORT (BLACK)	1	W/TRANSOM(L)
4-4	61821-88L20-Y5S	COVER, SIDE PORT (WHITE)	1	W/TRANSOM(L)
5-1	09136-06148	SCREW (6X35)	9	W/TRANSOM(S)
5-2	09136-06148	SCREW (6X35)	10	W/TRANSOM(L)
6	61151-88L00	CUSHION, SIDE COVER	1	
7-1	61831-88L10-YAY	PANEL, FRONT (BLACK)	1	
7-2	61831-88L10-Y5S	PANEL, FRONT (WHITE)	1	
8	09116-08163	BOLT (8X38)	2	
9	09169-08039	WASHER	2	
10	09320-11013	CUSHION	2	
11	61412-88L00	HOOK, FRONT PANEL	1	
12	03542-05169	SCREW	2	
13	61632-93J00	SHAFT, ENGINE COVER HOOK	1	
14	61641-88L00	HOOK, ENGINE COVER	1	
15	09116-06127	BOLT (6X12)	1	
16	61633-88L00	LEVER, HOOK REAR	1	
17	09160-13014	WASHER (13.2X25X1)	1	
18	09164-14008	WASHER	1	
19	09202-04022	PIN	1	
20	09306-13007	BUSH	1	

DF60A_E01_018_410A
SIDE COVER

FIG.410A

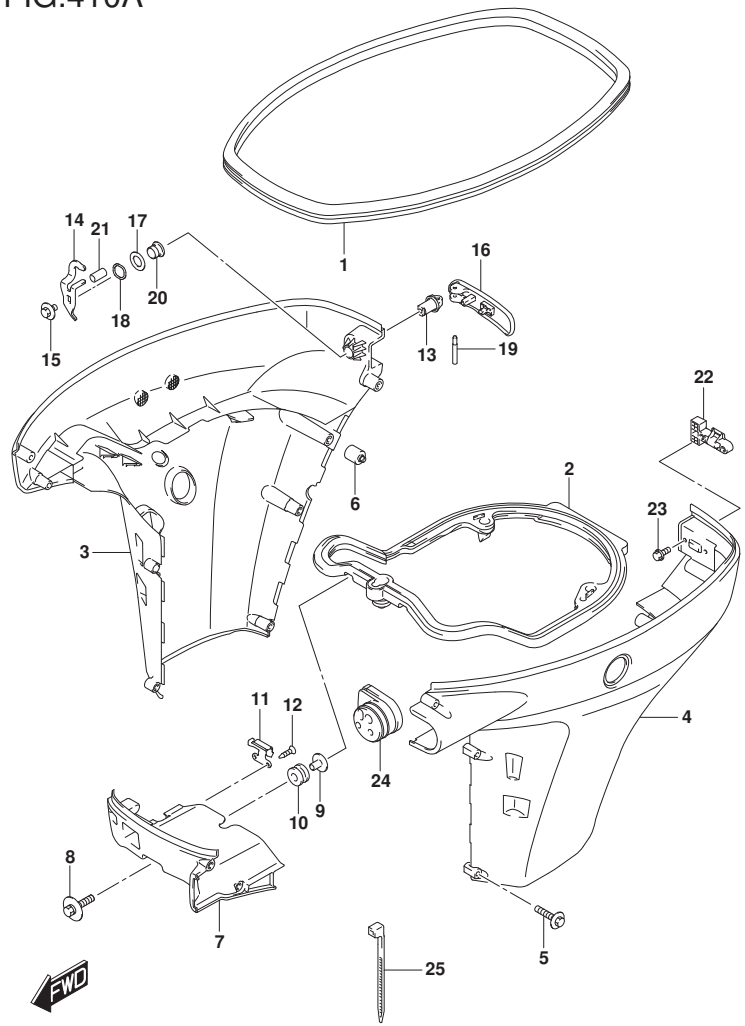

FIG.410A (2-B-10) SIDE COVER (DF40A E01)(DF40AST E34)(DF50A E01)

REF NO.	PART NO.	DESCRIPTION	Q'TY	REMARKS
21	09352-50901-600	HOSE (5X9X600)	1	L:600->20
22	61673-93J11	LATCH, HOOK LEVER	1	
23	09116-05010	BOLT (5X12)	2	
24	61124-88L10	GROMMET, REMOCON CABLE	1	
25	09407-25402	CLAMP (L:250)	1	

DF40A E01
DF40AST E34
DF50A E01

DF60A_E01_018_410A
SIDE COVER

FIG.410B

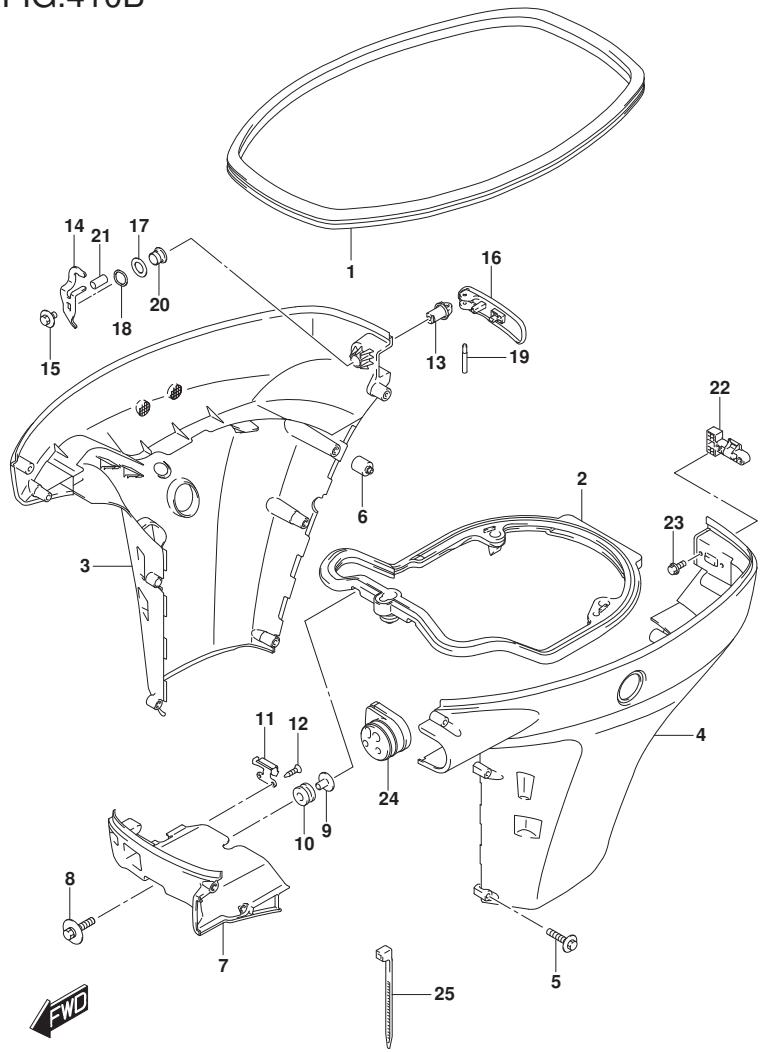

FIG.410B (2-B-11) SIDE COVER (DF40AQH E01)(DF40ATH E01)(DF50ATH E01)

REF NO.	PART NO.	DESCRIPTION	Q'TY	REMARKS
1	61112-88L10	RUBBER, SIDE COVER	1	
2	61134-88L10	SEAL, SIDE COVER	1	
3	61811-88L20-YAY	COVER, SIDE STBD (BLACK)	1	
4	61821-88L20-YAY	COVER, SIDE PORT (BLACK)	1	
5	09136-06148	SCREW (6X35)	10	
6	61151-88L00	CUSHION, SIDE COVER	1	
7	61831-88L10-YAY	PANEL, FRONT (BLACK)	1	
8	09116-08163	BOLT (8X38)	2	
9	09169-08039	WASHER	2	
10	09320-11013	CUSHION	2	
11	61412-88L00	HOOK, FRONT PANEL	1	
12	03542-05169	SCREW	2	
13	61632-93J00	SHAFT, ENGINE COVER HOOK	1	
14	61641-88L00	HOOK, ENGINE COVER	1	
15	09116-06127	BOLT (6X12)	1	
16	61633-88L00	LEVER, HOOK REAR	1	
17	09160-13014	WASHER (13.2X25X1)	1	
18	09164-14008	WASHER	1	
19	09202-04022	PIN	1	
20	09306-13007	BUSH	1	
21	09352-50901-600	HOSE (5X9X600)	1	L:600->20
22	61673-93J11	LATCH, HOOK LEVER	1	
23	09116-05010	BOLT (5X12)	2	
24	61124-88L10	GROMMET, REMOCON CABLE	1	
25	09407-25402	CLAMP (L:250)	1	

DF40AQH E01
DF40ATH E01
DF50ATH E01

FIG.410C

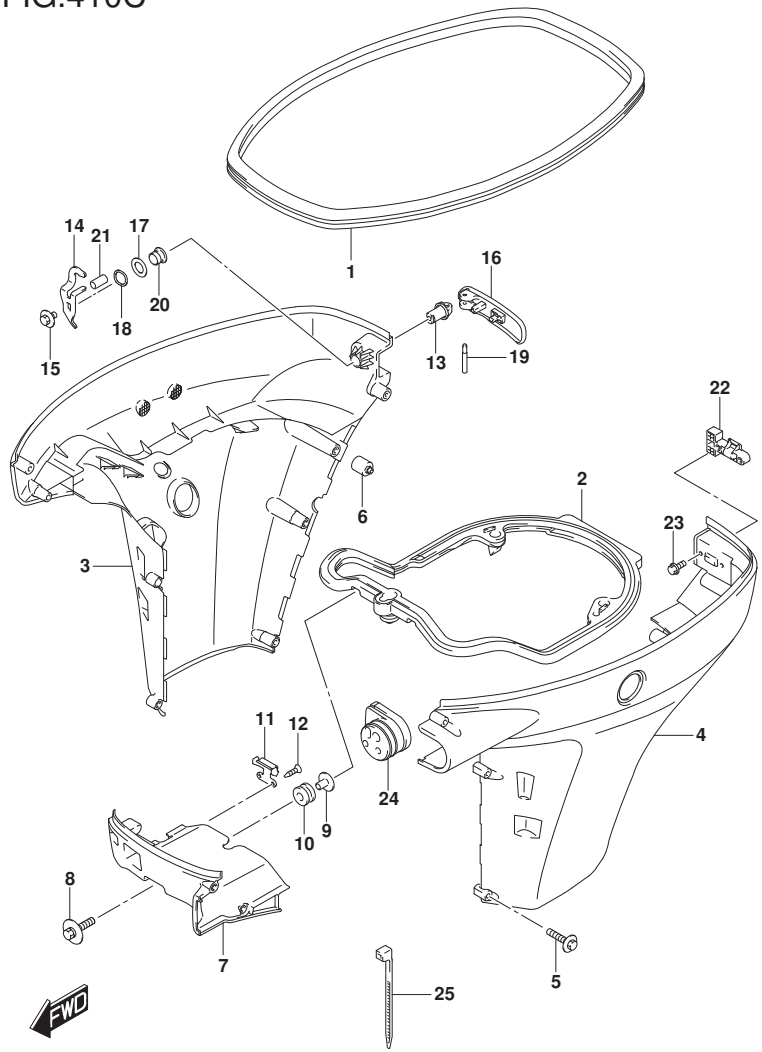

FIG.410C (2-B-12) SIDE COVER (DF60AQH E01)(DF60AQH E40)(DF60ATH E01)(DF60ATH

REF NO.	PART NO.	DESCRIPTION	Q'TY	REMARKS
1	61112-88L10	RUBBER, SIDE COVER	1	
2	61134-88L10	SEAL, SIDE COVER	1	
3	61811-88L20-YAY	COVER, SIDE STBD (BLACK)	1	
4	61821-88L20-YAY	COVER, SIDE PORT (BLACK)	1	
5	09136-06148	SCREW (6X35)	10	
6	61151-88L00	CUSHION, SIDE COVER	1	
7	61831-88L10-YAY	PANEL, FRONT (BLACK)	1	
8	09116-08163	BOLT (8X38)	2	
9	09169-08039	WASHER	2	
10	09320-11013	CUSHION	2	
11	61412-88L00	HOOK, FRONT PANEL	1	
12	03542-05169	SCREW	2	
13	61632-93J00	SHAFT, ENGINE COVER HOOK	1	
14	61641-88L00	HOOK, ENGINE COVER	1	
15	09116-06127	BOLT (6X12)	1	
16	61633-88L00	LEVER, HOOK REAR	1	
17	09160-13014	WASHER (13.2X25X1)	1	
18	09164-14008	WASHER	1	
19	09202-04022	PIN	1	
20	09306-13007	BUSH	1	
21	09352-50901-600	HOSE (5X9X600)	1	L:600->20
22	61673-93J11	LATCH, HOOK LEVER	1	
23	09116-05010	BOLT (5X12)	2	
24	61124-88L10	GROMMET, REMOCON CABLE	1	
25	09407-25402	CLAMP (L:250)	1	

DF60AQH E01
DF60AQH E40
DF60ATH E01
DF60ATH E40

DF60A_E01_018_410C
SIDE COVER

FIG.410D

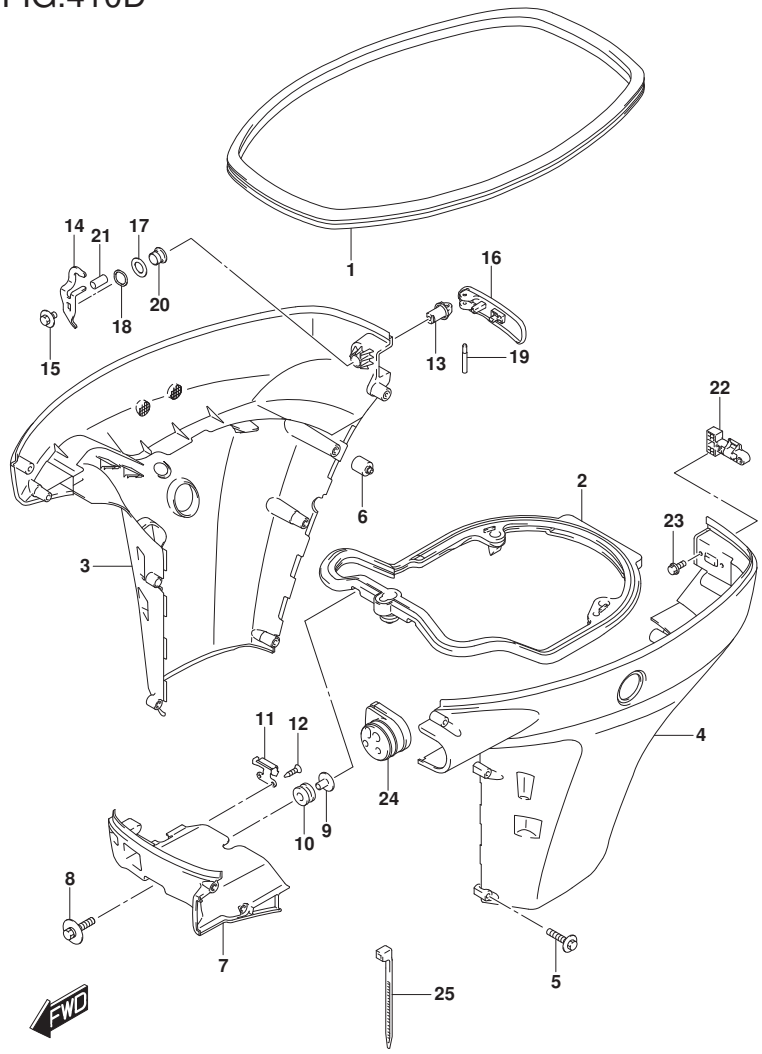

FIG.410D (2-B-13) SIDE COVER (DF60A E40)

REF NO.	PART NO.	DESCRIPTION	Q'TY	REMARKS
1	61112-88L10	RUBBER, SIDE COVER	1	
2	61134-88L10	SEAL, SIDE COVER	1	
3-1	61811-88L20-YAY	COVER, SIDE STBD (BLACK)	1	
3-2	61811-88L20-Y5S	COVER, SIDE STBD (WHITE)	1	
4-1	61821-88L20-YAY	COVER, SIDE PORT (BLACK)	1	
4-2	61821-88L20-Y5S	COVER, SIDE PORT (WHITE)	1	
5	09136-06148	SCREW (6X35)	10	
6	61151-88L00	CUSHION, SIDE COVER	1	
7-1	61831-88L10-YAY	PANEL, FRONT (BLACK)	1	
7-2	61831-88L10-Y5S	PANEL, FRONT (WHITE)	1	
8	09116-08163	BOLT (8X38)	2	
9	09169-08039	WASHER	2	
10	09320-11013	CUSHION	2	
11	61412-88L00	HOOK, FRONT PANEL	1	
12	03542-05169	SCREW	2	
13	61632-93J00	SHAFT, ENGINE COVER HOOK	1	
14	61641-88L00	HOOK, ENGINE COVER	1	
15	09116-06127	BOLT (6X12)	1	
16	61633-88L00	LEVER, HOOK REAR	1	
17	09160-13014	WASHER (13.2X25X1)	1	
18	09164-14008	WASHER	1	
19	09202-04022	PIN	1	
20	09306-13007	BUSH	1	
21	09352-50901-600	HOSE (5X9X600)	1	L:600->20
22	61673-93J11	LATCH, HOOK LEVER	1	
23	09116-05010	BOLT (5X12)	2	
24	61124-88L10	GROMMET, REMOCON CABLE	1	
25	09407-25402	CLAMP (L:250)	1	

DF60A E40

FIG.410E

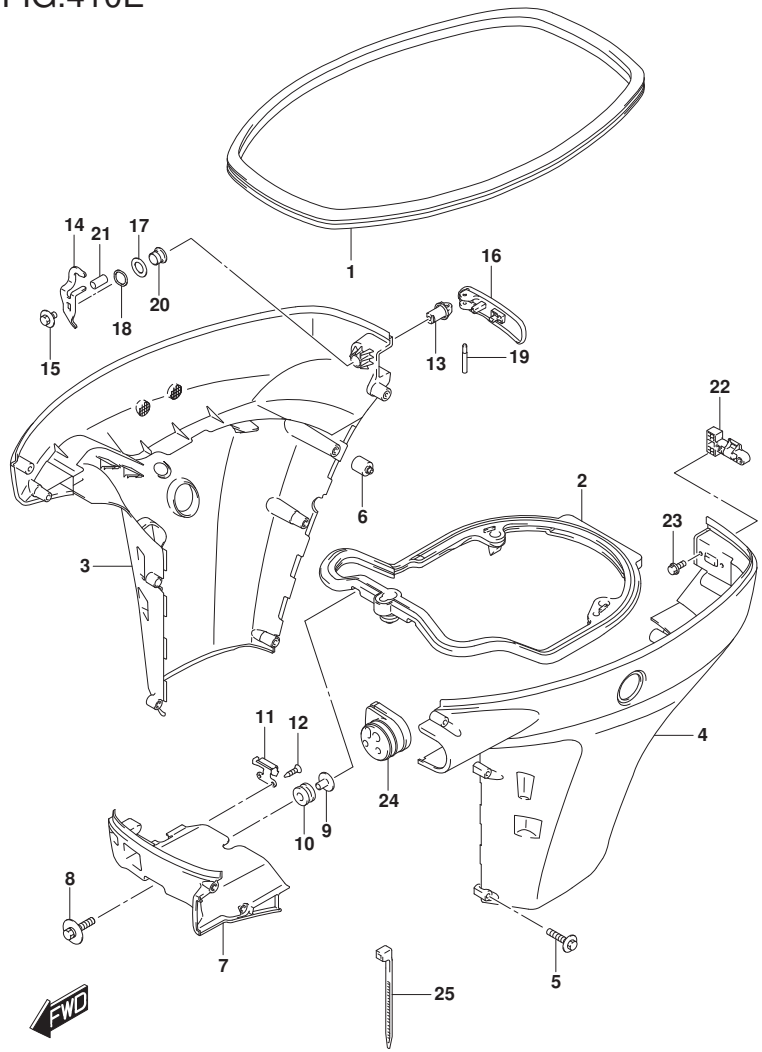

FIG.410E (2-B-14) SIDE COVER (DF60A E01)

REF NO.	PART NO.	DESCRIPTION	Q'TY	REMARKS
1	61112-88L10	RUBBER, SIDE COVER	1	
2	61134-88L10	SEAL, SIDE COVER	1	
3-1	61811-88L30-YAY	COVER, SIDE STBD (S) (BLACK)	1	W/TRANSOM(S)
3-2	61811-88L30-Y5S	COVER, SIDE STBD (S) (WHITE)	1	W/TRANSOM(S)
3-3	61811-88L20-YAY	COVER, SIDE STBD (BLACK)	1	W/TRANSOM(L)
				W/TRANSOM(X)
3-4	61811-88L20-Y5S	COVER, SIDE STBD (WHITE)	1	W/TRANSOM(L)
				W/TRANSOM(X)
4-1	61821-88L30-YAY	COVER, SIDE PORT (S) (BLACK)	1	W/TRANSOM(S)
4-2	61821-88L30-Y5S	COVER, SIDE PORT (S) (WHITE)	1	W/TRANSOM(S)
4-3	61821-88L20-YAY	COVER, SIDE PORT (BLACK)	1	W/TRANSOM(L)
				W/TRANSOM(X)
4-4	61821-88L20-Y5S	COVER, SIDE PORT (WHITE)	1	W/TRANSOM(L)
				W/TRANSOM(X)
5-1	09136-06148	SCREW (6X35)	9	W/TRANSOM(S)
5-2	09136-06148	SCREW (6X35)	10	W/TRANSOM(L)
				W/TRANSOM(X)
6	61151-88L00	CUSHION, SIDE COVER	1	
7-1	61831-88L10-YAY	PANEL, FRONT (BLACK)	1	
7-2	61831-88L10-Y5S	PANEL, FRONT (WHITE)	1	
8	09116-08163	BOLT (8X38)	2	
9	09169-08039	WASHER	2	
10	09320-11013	CUSHION	2	
11	61412-88L00	HOOK, FRONT PANEL	1	
12	03542-05169	SCREW	2	
13	61632-93J00	SHAFT, ENGINE COVER HOOK	1	
14	61641-88L00	HOOK, ENGINE COVER	1	
15	09116-06127	BOLT (6X12)	1	
16	61633-88L00	LEVER, HOOK REAR	1	
17	09160-13014	WASHER (13.2X25X1)	1	
18	09164-14008	WASHER	1	
19	09202-04022	PIN	1	

FIG.410E

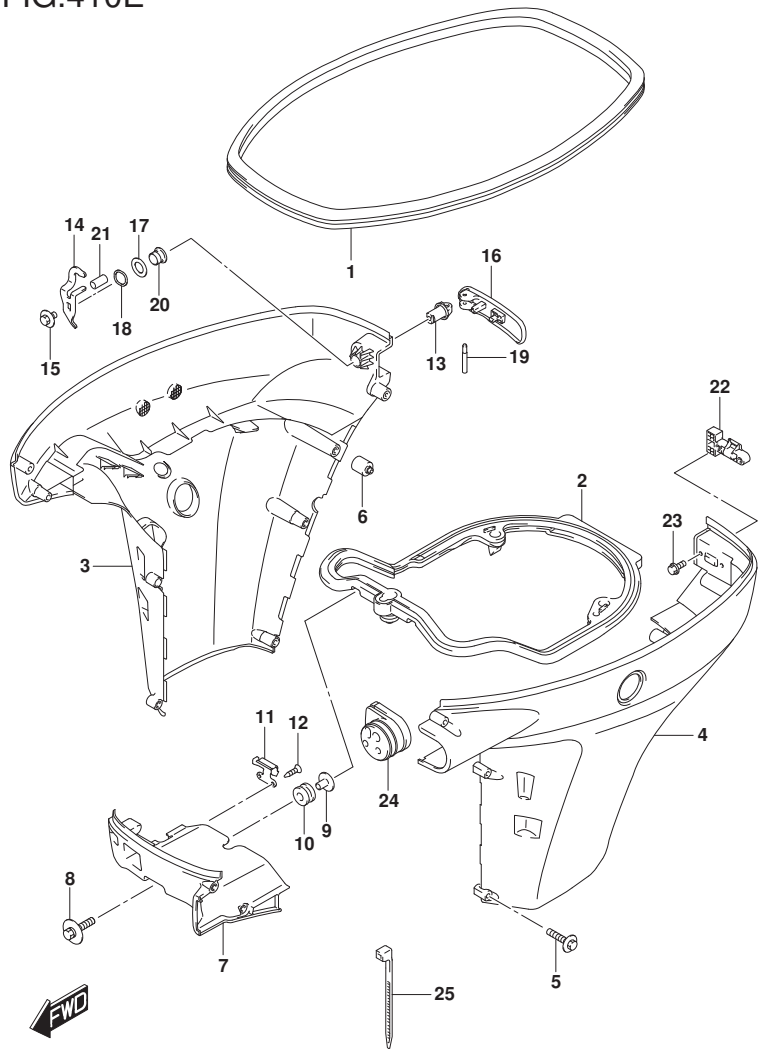

FIG.410E (2-B-15) SIDE COVER (DF60A E01)

REF NO.	PART NO.	DESCRIPTION	Q'TY	REMARKS
20	09306-13007	BUSH	1	
21	09352-50901-600	HOSE (5X9X600)	1	L:600->20
22	61673-93J11	LATCH, HOOK LEVER	1	
23	09116-05010	BOLT (5X12)	2	
24	61124-88L10	GROMMET, REMOCON CABLE	1	
25	09407-25402	CLAMP (L:250)	1	

DF60A E01

DF60A_E01_018_410E
SIDE COVER

FIG.410F

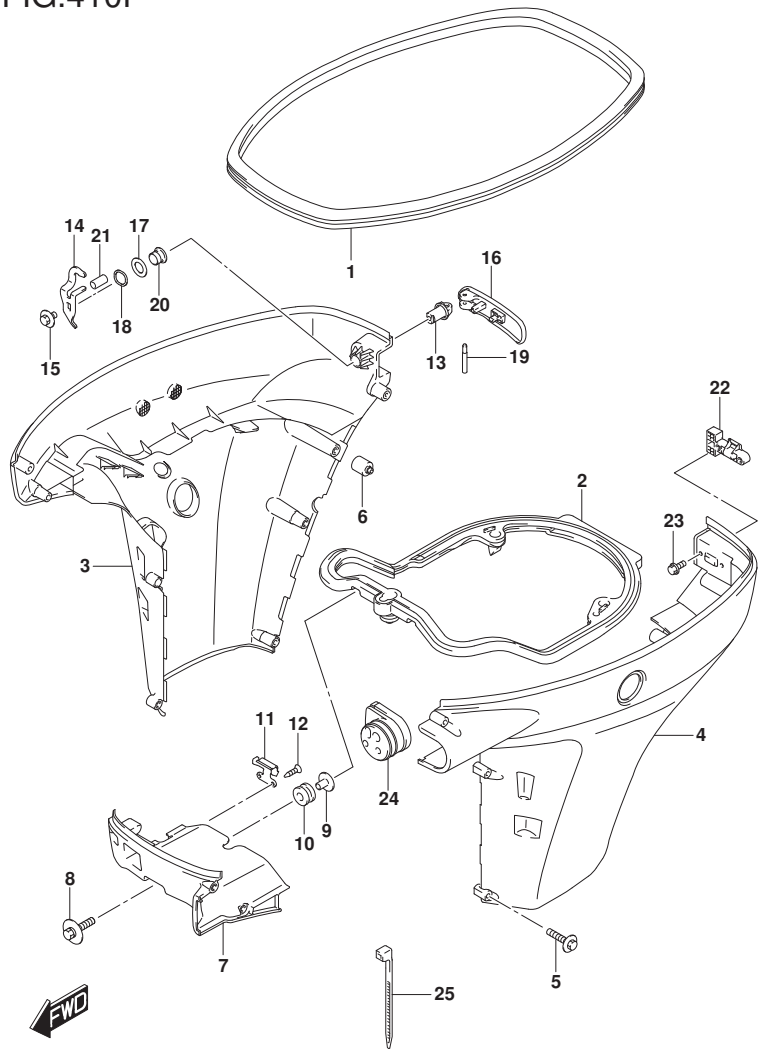

FIG.410F (2-C-2) SIDE COVER (DF50AVT E01)(DF50AVTH E01)

REF NO.	PART NO.	DESCRIPTION	Q'TY	REMARKS
1	61112-88L10	RUBBER, SIDE COVER	1	
2	61134-88L10	SEAL, SIDE COVER	1	
3	61811-88L30-YAY	COVER, SIDE STBD (S) (BLACK)	1	
4	61821-88L30-YAY	COVER, SIDE PORT (S) (BLACK)	1	
5	09136-06148	SCREW (6X35)	9	
6	61151-88L00	CUSHION, SIDE COVER	1	
7	61831-88L10-YAY	PANEL, FRONT (BLACK)	1	
8	09116-08163	BOLT (8X38)	2	
9	09169-08039	WASHER	2	
10	09320-11013	CUSHION	2	
11	61412-88L00	HOOK, FRONT PANEL	1	
12	03542-05169	SCREW	2	
13	61632-93J00	SHAFT, ENGINE COVER HOOK	1	
14	61641-88L00	HOOK, ENGINE COVER	1	
15	09116-06127	BOLT (6X12)	1	
16	61633-88L00	LEVER, HOOK REAR	1	
17	09160-13014	WASHER (13.2X25X1)	1	
18	09164-14008	WASHER	1	
19	09202-04022	PIN	1	
20	09306-13007	BUSH	1	
21	09352-50901-600	HOSE (5X9X600)	1	L:600->20
22	61673-93J11	LATCH, HOOK LEVER	1	
23	09116-05010	BOLT (5X12)	2	
24	61124-88L10	GROMMET, REMOCON CABLE	1	
25	09407-25402	CLAMP (L:250)	1	

DF50AVT E01
DF50AVTH E01

FIG.410G

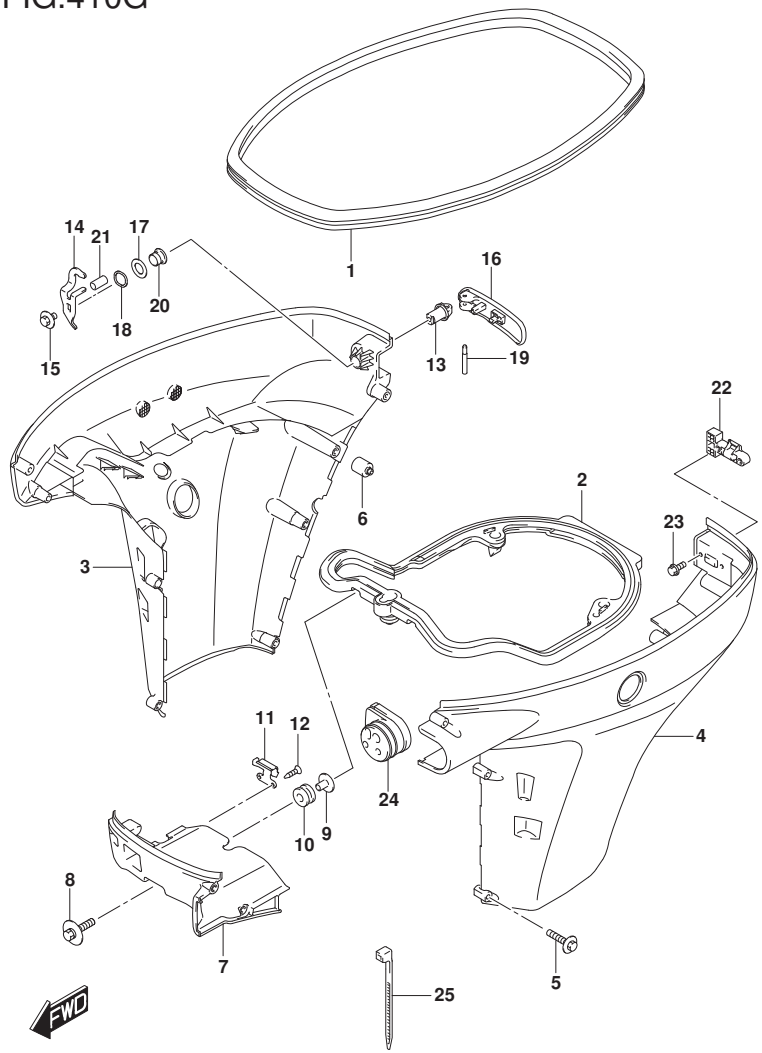

FIG.410G (2-C-3) SIDE COVER (DF60AVT E01)(DF60AVT E40)(DF60AVTH E01)(DF60AVT

REF NO.	PART NO.	DESCRIPTION	Q'TY	REMARKS
1	61112-88L10	RUBBER, SIDE COVER	1	
2	61134-88L10	SEAL, SIDE COVER	1	
3-1	61811-88L30-YAY	COVER, SIDE STBD (S) (BLACK)	1	W/TRANSOM(L)
3-2	61811-88L20-YAY	COVER, SIDE STBD (BLACK)	1	W/TRANSOM(X)
4-1	61821-88L30-YAY	COVER, SIDE PORT (S) (BLACK)	1	W/TRANSOM(L)
4-2	61821-88L20-YAY	COVER, SIDE PORT (BLACK)	1	W/TRANSOM(X)
5-1	09136-06148	SCREW (6X35)	9	W/TRANSOM(L)
5-2	09136-06148	SCREW (6X35)	10	W/TRANSOM(X)
6	61151-88L00	CUSHION, SIDE COVER	1	
7	61831-88L10-YAY	PANEL, FRONT (BLACK)	1	
8	09116-08163	BOLT (8X38)	2	
9	09169-08039	WASHER	2	
10	09320-11013	CUSHION	2	
11	61412-88L00	HOOK, FRONT PANEL	1	
12	03542-05169	SCREW	2	
13	61632-93J00	SHAFT, ENGINE COVER HOOK	1	
14	61641-88L00	HOOK, ENGINE COVER	1	
15	09116-06127	BOLT (6X12)	1	
16	61633-88L00	LEVER, HOOK REAR	1	
17	09160-13014	WASHER (13.2X25X1)	1	
18	09164-14008	WASHER	1	
19	09202-04022	PIN	1	
20	09306-13007	BUSH	1	
21	09352-50901-600	HOSE (5X9X600)	1	L:600->20
22	61673-93J11	LATCH, HOOK LEVER	1	
23	09116-05010	BOLT (5X12)	2	
24	61124-88L10	GROMMET, REMOCON CABLE	1	
25	09407-25402	CLAMP (L:250)	1	

DF60AVT E01
DF60AVT E40
DF60AVTH E01
DF60AVTH E40

FIG.420A

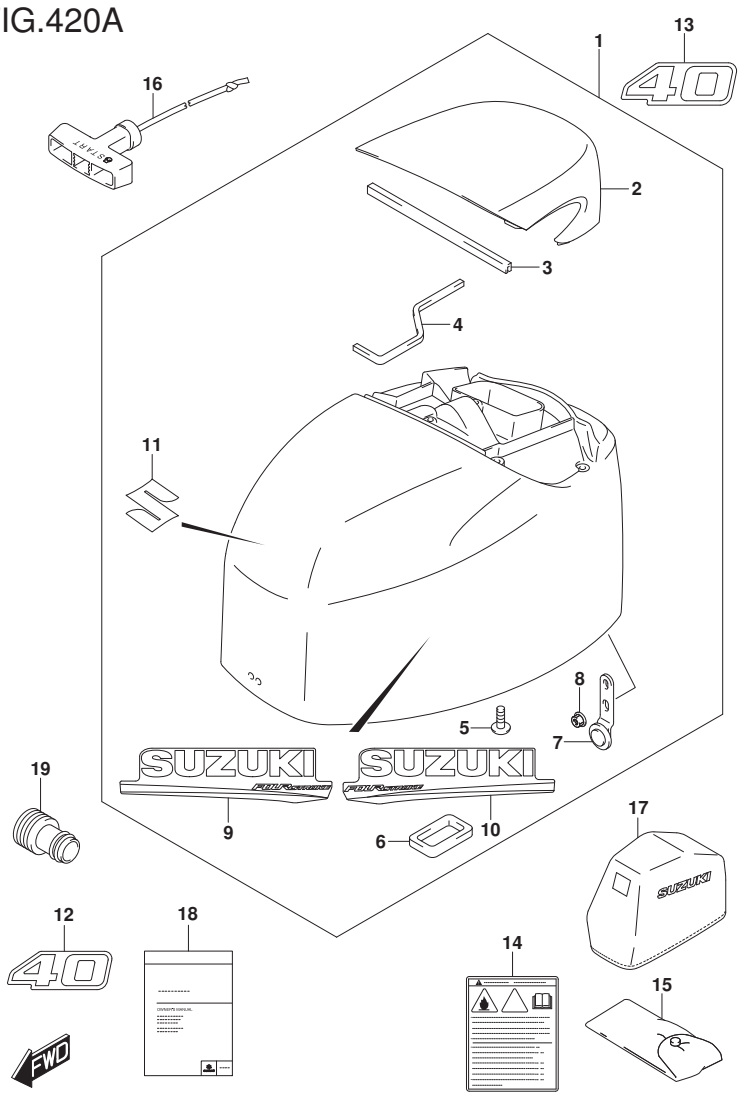

FIG.420A (2-C-4) ENGINE COVER (DF40A E01)

REF NO.	PART NO.	DESCRIPTION	Q'TY	REMARKS
1-1	61400-88820-YAY	COVER SET, ENGINE (BLACK)	1	
1-2	61400-88830-Y5S	COVER SET, ENGINE (WHITE)	1	
2-1	61431-88L10-YAY	.HANDLE, TILT UP (BLACK)	1	
2-2	61431-88L10-Y5S	.HANDLE, TILT UP (WHITE)	1	
3	61438-88L00	.SEAL, TILT UP HANDLE NO.1	1	
4	61439-88L00	.SEAL, TILT UP HANDLE NO.2	1	
5	03542-06169	.SCREW	5	
6	61476-88L00	.SEAL, AIR VENT	1	
7	61610-95J00	.FASTENER	1	
8	09159-06084	.NUT	1	
9-1	61443-88L20	.STRIPE, ENGINE COVER STBD	1	FOR YAY
9-2	61443-88L30	.STRIPE, ENGINE COVER STBD	1	FOR Y5S
10-1	61453-88L20	.STRIPE, ENGINE COVER PORT	1	FOR YAY
10-2	61453-88L30	.STRIPE, ENGINE COVER PORT	1	FOR Y5S
11	68111-18G20	.EMBLEM (S)	1	
12-1	61422-88L30	MARK, EMBLEM FRONT (40)	1	FOR YAY
12-2	61422-88L60	MARK, EMBLEM FRONT (40)	1	FOR Y5S
13-1	61435-88L60	MARK, EMBLEM REAR (40)	1	FOR YAY
13-2	61435-88L90	MARK, EMBLEM REAR (40)	1	FOR Y5S
14	61458-90J00	LABEL, ENGINE COVER	1	
15	09800-81812	TOOL ASSY	1	
16	18210-88L00	KNOB ASSY, STARTER	1	
17	68110-88L01	COVER, WEATHER	1	OPT
18-1	99011-88L70-054	MANUAL, OWNER'S	1	
18-2	99011-88L70-059	MANUAL, OWNER'S	1	
19	17917-87L00	CONNECTOR, FLUSH WATER	1	

DF40A E01

FIG.420B

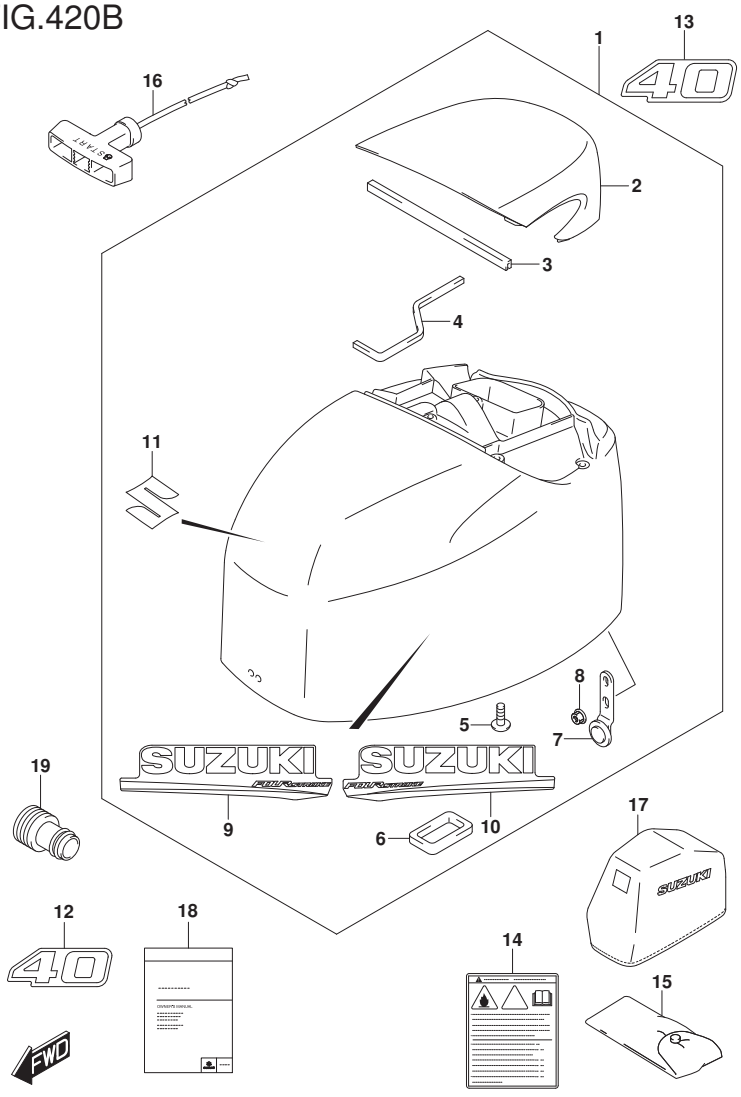

FIG.420B (2-C-5) ENGINE COVER (DF40AQH E01)(DF40ATH E01)

REF NO.	PART NO.	DESCRIPTION	Q'TY	REMARKS
1	61400-88820-YAY	COVER SET, ENGINE (BLACK)	1	
2	61431-88L10-YAY	.HANDLE, TILT UP (BLACK)	1	
3	61438-88L00	.SEAL, TILT UP HANDLE NO.1	1	
4	61439-88L00	.SEAL, TILT UP HANDLE NO.2	1	
5	03542-06169	.SCREW	5	
6	61476-88L00	.SEAL, AIR VENT	1	
7	61610-95J00	.FASTENER	1	
8	09159-06084	.NUT	1	
9	61443-88L20	.STRIPE, ENGINE COVER STBD	1	
10	61453-88L20	.STRIPE, ENGINE COVER PORT	1	
11	68111-18G20	.EMBLEM (S)	1	
12	61422-88L30	MARK, EMBLEM FRONT (40)	1	
13	61435-88L60	MARK, EMBLEM REAR (40)	1	
14	61458-90J00	LABEL, ENGINE COVER	1	
15	09800-81812	TOOL ASSY	1	
16	18210-88L00	KNOB ASSY, STARTER	1	
17	68110-88L01	COVER, WEATHER	1	OPT
18-1	99011-88L70-054	MANUAL, OWNER'S	1	
18-2	99011-88L70-059	MANUAL, OWNER'S	1	
19	17917-87L00	CONNECTOR, FLUSH WATER	1	

DF40AQH E01
DF40ATH E01

FIG.420C

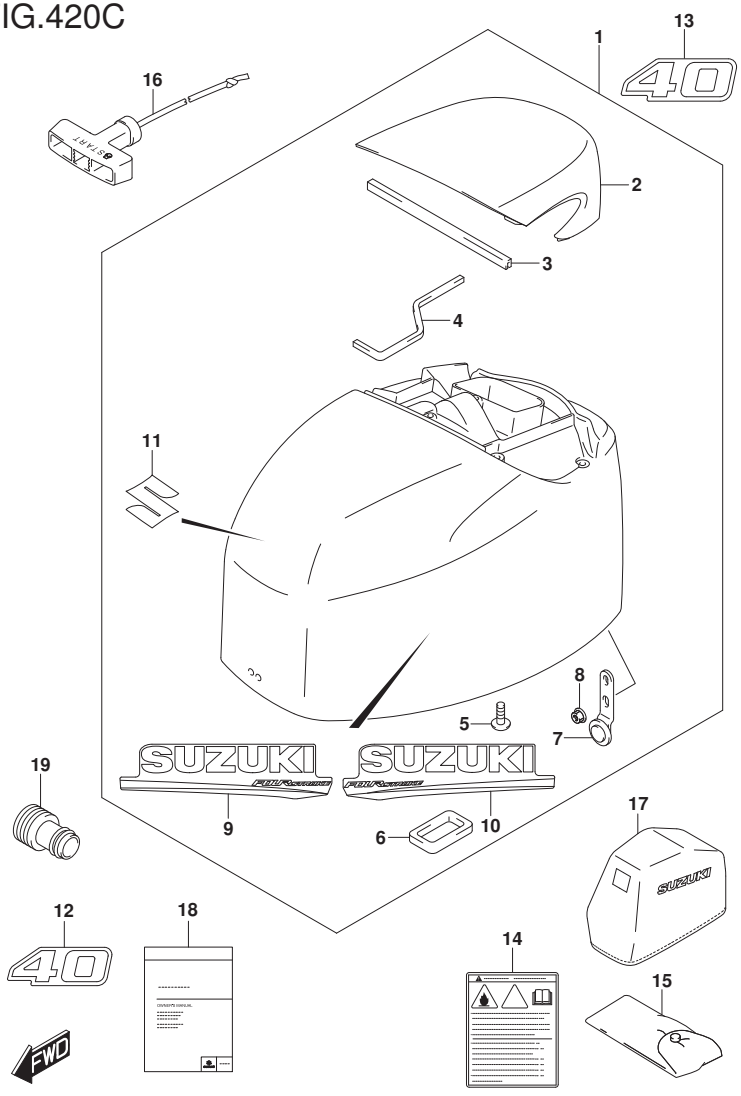

FIG.420C (2-C-6) ENGINE COVER (DF40AST E34)

REF NO.	PART NO.	DESCRIPTION	Q'TY	REMARKS
1-1	61400-88820-YAY	COVER SET, ENGINE (BLACK)	1	
1-2	61400-88830-Y5S	COVER SET, ENGINE (WHITE)	1	
2-1	61431-88L10-YAY	.HANDLE, TILT UP (BLACK)	1	
2-2	61431-88L10-Y5S	.HANDLE, TILT UP (WHITE)	1	
3	61438-88L00	.SEAL, TILT UP HANDLE NO.1	1	
4	61439-88L00	.SEAL, TILT UP HANDLE NO.2	1	
5	03542-06169	.SCREW	5	
6	61476-88L00	.SEAL, AIR VENT	1	
7	61610-95J00	.FASTENER	1	
8	09159-06084	.NUT	1	
9-1	61443-88L20	.STRIPE, ENGINE COVER STBD	1	FOR YAY
9-2	61443-88L30	.STRIPE, ENGINE COVER STBD	1	FOR Y5S
10-1	61453-88L20	.STRIPE, ENGINE COVER PORT	1	FOR YAY
10-2	61453-88L30	.STRIPE, ENGINE COVER PORT	1	FOR Y5S
11	68111-18G20	.EMBLEM (S)	1	
12-1	61422-88L30	MARK, EMBLEM FRONT (40)	1	FOR YAY
12-2	61422-88L60	MARK, EMBLEM FRONT (40)	1	FOR Y5S
13-1	61435-88L60	MARK, EMBLEM REAR (40)	1	FOR YAY
13-2	61435-88L90	MARK, EMBLEM REAR (40)	1	FOR Y5S
14	61458-90J00	LABEL, ENGINE COVER	1	
15	09800-81812	TOOL ASSY	1	
16	18210-88L00	KNOB ASSY, STARTER	1	
17	68110-88L01	COVER, WEATHER	1	OPT
18	99011-88L70-054	MANUAL, OWNER'S	1	
19	17917-87L00	CONNECTOR, FLUSH WATER	1	

DF40AST E34

DF60A_E01_018_420C
ENGINE COVER

FIG.420D

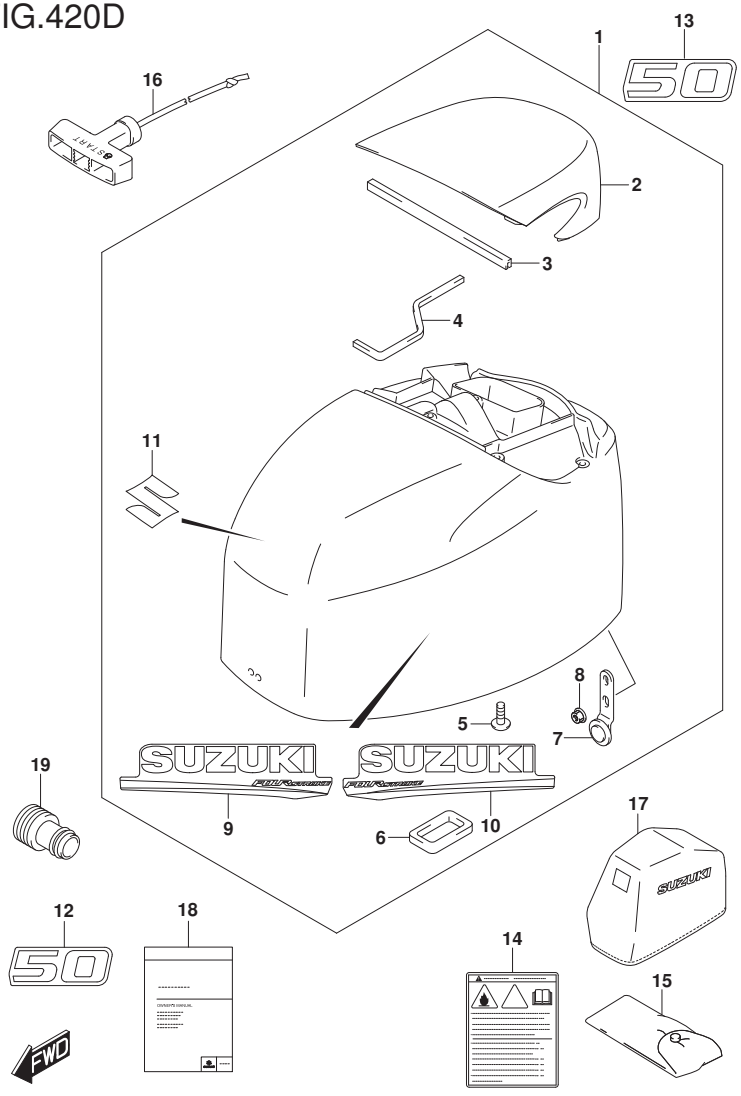

FIG.420D (2-C-7) ENGINE COVER (DF50A E01)

REF NO.	PART NO.	DESCRIPTION	Q'TY	REMARKS
1-1	61400-88820-YAY	COVER SET, ENGINE (BLACK)	1	
1-2	61400-88830-Y5S	COVER SET, ENGINE (WHITE)	1	
2-1	61431-88L10-YAY	.HANDLE, TILT UP (BLACK)	1	
2-2	61431-88L10-Y5S	.HANDLE, TILT UP (WHITE)	1	
3	61438-88L00	.SEAL, TILT UP HANDLE NO.1	1	
4	61439-88L00	.SEAL, TILT UP HANDLE NO.2	1	
5	03542-06169	.SCREW	5	
6	61476-88L00	.SEAL, AIR VENT	1	
7	61610-95J00	.FASTENER	1	
8	09159-06084	.NUT	1	
9-1	61443-88L20	.STRIPE, ENGINE COVER STBD	1	FOR YAY
9-2	61443-88L30	.STRIPE, ENGINE COVER STBD	1	FOR Y5S
10-1	61453-88L20	.STRIPE, ENGINE COVER PORT	1	FOR YAY
10-2	61453-88L30	.STRIPE, ENGINE COVER PORT	1	FOR Y5S
11	68111-18G20	.EMBLEM (S)	1	
12-1	61422-88L40	MARK, EMBLEM FRONT (50)	1	FOR YAY
12-2	61422-88L70	MARK, EMBLEM FRONT (50)	1	FOR Y5S
13-1	61435-88L70	MARK, EMBLEM REAR (50)	1	FOR YAY
13-2	61435-88LA0	MARK, EMBLEM REAR (50)	1	FOR Y5S
14	61458-90J00	LABEL, ENGINE COVER	1	
15	09800-81812	TOOL ASSY	1	
16	18210-88L00	KNOB ASSY, STARTER	1	
17	68110-88L01	COVER, WEATHER	1	OPT
18-1	99011-88L70-054	MANUAL, OWNER'S	1	
18-2	99011-88L70-059	MANUAL, OWNER'S	1	
19	17917-87L00	CONNECTOR, FLUSH WATER	1	

DF50A E01

FIG.420E

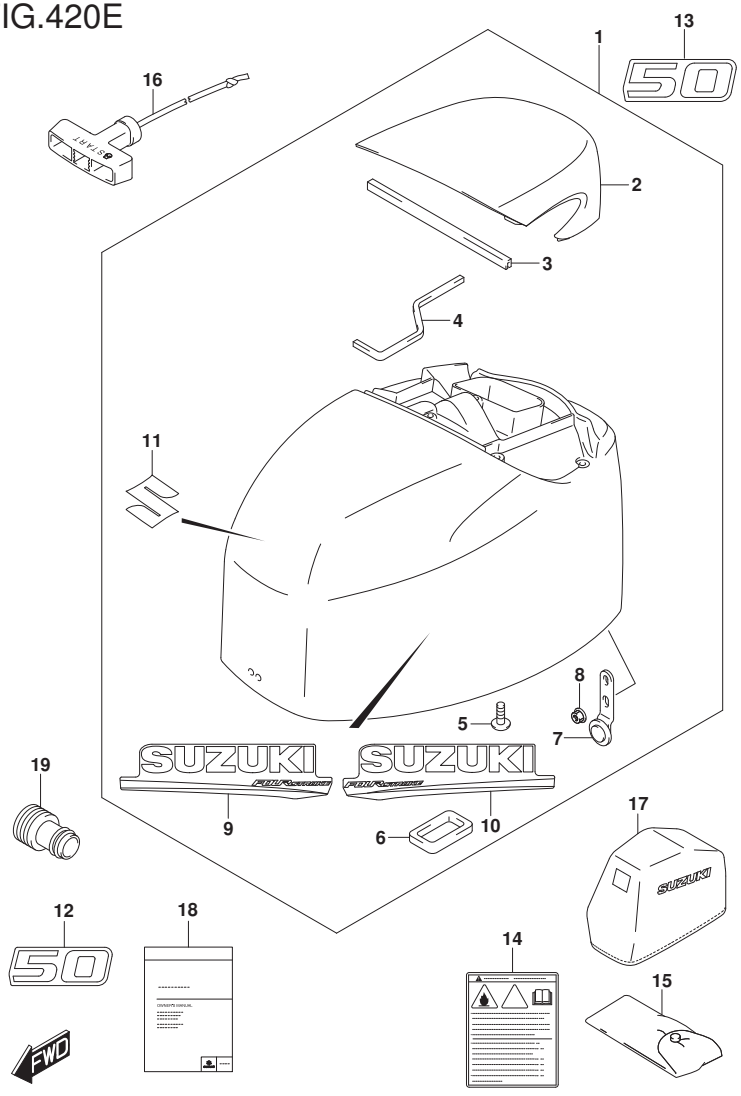

FIG.420E (2-C-8) ENGINE COVER (DF50ATH E01)(DF50AVT E01)(DF50AVTH E01)

REF NO.	PART NO.	DESCRIPTION	Q'TY	REMARKS
1	61400-88820-YAY	COVER SET, ENGINE (BLACK)	1	
2	61431-88L10-YAY	.HANDLE, TILT UP (BLACK)	1	
3	61438-88L00	.SEAL, TILT UP HANDLE NO.1	1	
4	61439-88L00	.SEAL, TILT UP HANDLE NO.2	1	
5	03542-06169	.SCREW	5	
6	61476-88L00	.SEAL, AIR VENT	1	
7	61610-95J00	.FASTENER	1	
8	09159-06084	.NUT	1	
9	61443-88L20	.STRIPE, ENGINE COVER STBD	1	
10	61453-88L20	.STRIPE, ENGINE COVER PORT	1	
11	68111-18G20	.EMBLEM (S)	1	
12	61422-88L40	MARK, EMBLEM FRONT (50)	1	
13	61435-88L70	MARK, EMBLEM REAR (50)	1	
14	61458-90J00	LABEL, ENGINE COVER	1	
15	09800-81812	TOOL ASSY	1	
16	18210-88L00	KNOB ASSY, STARTER	1	
17	68110-88L01	COVER, WEATHER	1	OPT
18-1	99011-88L70-054	MANUAL, OWNER'S	1	
18-2	99011-88L70-059	MANUAL, OWNER'S	1	
19	17917-87L00	CONNECTOR, FLUSH WATER	1	

DF50ATH E01
DF50AVT E01
DF50AVTH E01

DF60A_E01_018_420E
ENGINE COVER

FIG.420F

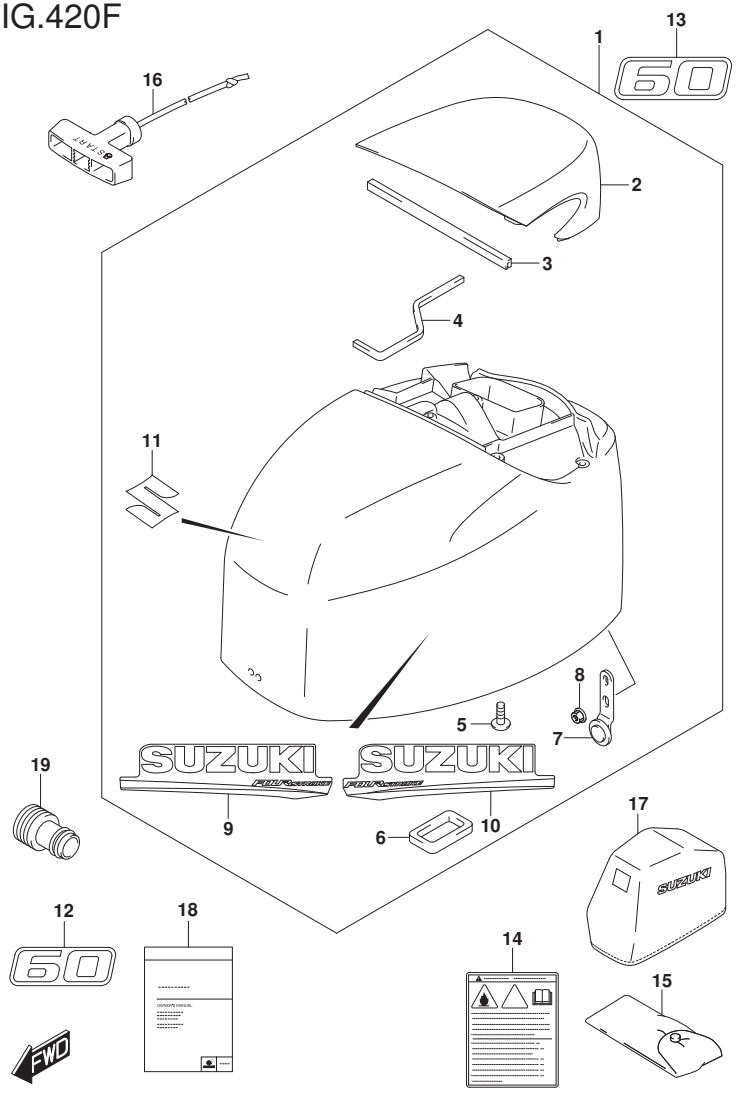

FIG.420F (2-C-9) ENGINE COVER (DF60A E01)

REF NO.	PART NO.	DESCRIPTION	Q'TY	REMARKS
1-1	61400-88820-YAY	COVER SET, ENGINE (BLACK)	1	
1-2	61400-88830-Y5S	COVER SET, ENGINE (WHITE)	1	
2-1	61431-88L10-YAY	.HANDLE, TILT UP (BLACK)	1	
2-2	61431-88L10-Y5S	.HANDLE, TILT UP (WHITE)	1	
3	61438-88L00	.SEAL, TILT UP HANDLE NO.1	1	
4	61439-88L00	.SEAL, TILT UP HANDLE NO.2	1	
5	03542-06169	.SCREW	5	
6	61476-88L00	.SEAL, AIR VENT	1	
7	61610-95J00	.FASTENER	1	
8	09159-06084	.NUT	1	
9-1	61443-88L20	.STRIPE, ENGINE COVER STBD	1	FOR YAY
9-2	61443-88L30	.STRIPE, ENGINE COVER STBD	1	FOR Y5S
10-1	61453-88L20	.STRIPE, ENGINE COVER PORT	1	FOR YAY
10-2	61453-88L30	.STRIPE, ENGINE COVER PORT	1	FOR Y5S
11	68111-18G20	.EMBLEM (S)	1	
12-1	61422-88L50	MARK, EMBLEM FRONT (60)	1	FOR YAY
12-2	61422-88L80	MARK, EMBLEM FRONT (60)	1	FOR Y5S
13-1	61435-88L80	MARK, EMBLEM REAR (60)	1	FOR YAY
13-2	61435-88LB0	MARK, EMBLEM REAR (60)	1	FOR Y5S
14	61458-90J00	LABEL, ENGINE COVER	1	
15	09800-81812	TOOL ASSY	1	
16	18210-88L00	KNOB ASSY, STARTER	1	
17	68110-88L01	COVER, WEATHER	1	OPT
18-1	99011-88L70-054	MANUAL, OWNER'S	1	
18-2	99011-88L70-059	MANUAL, OWNER'S	1	
19	17917-87L00	CONNECTOR, FLUSH WATER	1	

DF60A E01

DF60A_E01_018_420F
ENGINE COVER

FIG.420G

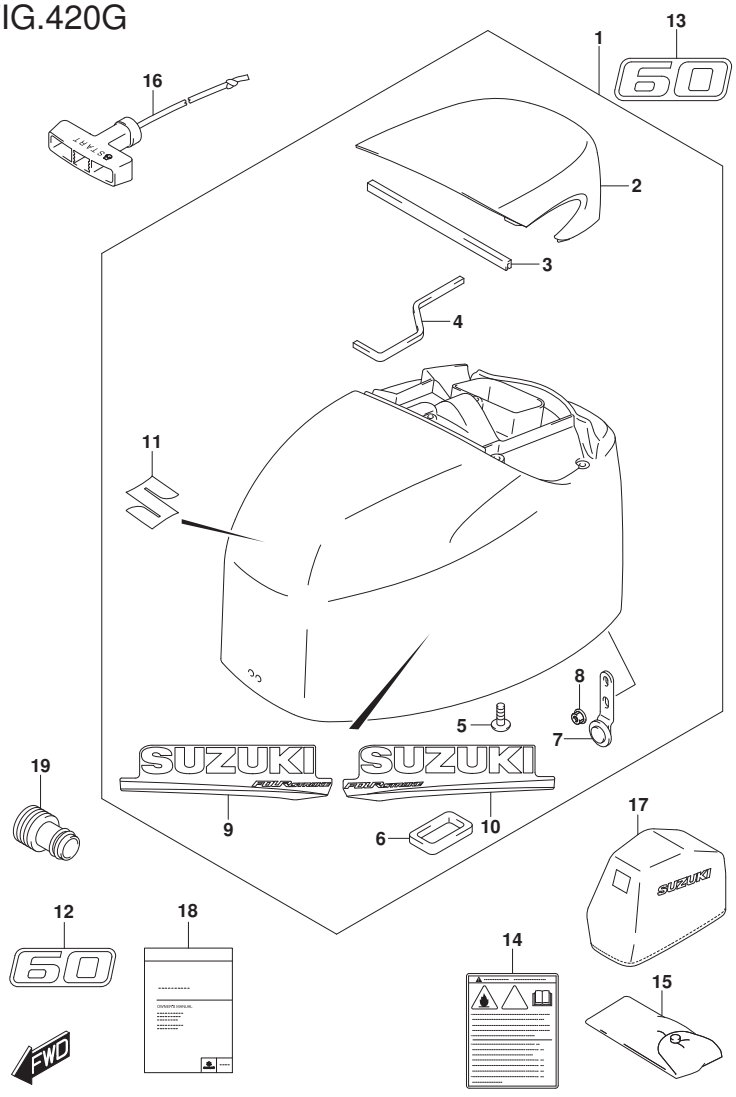

FIG.420G (2-C-10) ENGINE COVER (DF60A E40)

REF NO.	PART NO.	DESCRIPTION	Q'TY	REMARKS
1-1	61400-88820-YAY	COVER SET, ENGINE (BLACK)	1	
1-2	61400-88830-Y5S	COVER SET, ENGINE (WHITE)	1	
2-1	61431-88L10-YAY	.HANDLE, TILT UP (BLACK)	1	
2-2	61431-88L10-Y5S	.HANDLE, TILT UP (WHITE)	1	
3	61438-88L00	.SEAL, TILT UP HANDLE NO.1	1	
4	61439-88L00	.SEAL, TILT UP HANDLE NO.2	1	
5	03542-06169	.SCREW	5	
6	61476-88L00	.SEAL, AIR VENT	1	
7	61610-95J00	.FASTENER	1	
8	09159-06084	.NUT	1	
9-1	61443-88L20	.STRIPE, ENGINE COVER STBD	1	FOR YAY
9-2	61443-88L30	.STRIPE, ENGINE COVER STBD	1	FOR Y5S
10-1	61453-88L20	.STRIPE, ENGINE COVER PORT	1	FOR YAY
10-2	61453-88L30	.STRIPE, ENGINE COVER PORT	1	FOR Y5S
11	68111-18G20	.EMBLEM (S)	1	
12-1	61422-88L50	MARK, EMBLEM FRONT (60)	1	FOR YAY
12-2	61422-88L80	MARK, EMBLEM FRONT (60)	1	FOR Y5S
13-1	61435-88L80	MARK, EMBLEM REAR (60)	1	FOR YAY
13-2	61435-88LB0	MARK, EMBLEM REAR (60)	1	FOR Y5S
14	61458-90J00	LABEL, ENGINE COVER	1	
15	09800-81812	TOOL ASSY	1	
16	18210-88L00	KNOB ASSY, STARTER	1	
17	68110-88L01	COVER, WEATHER	1	OPT
18	99011-88L70-059	MANUAL, OWNER'S	1	
19	17917-87L00	CONNECTOR, FLUSH WATER	1	

DF60A E40

FIG.420H

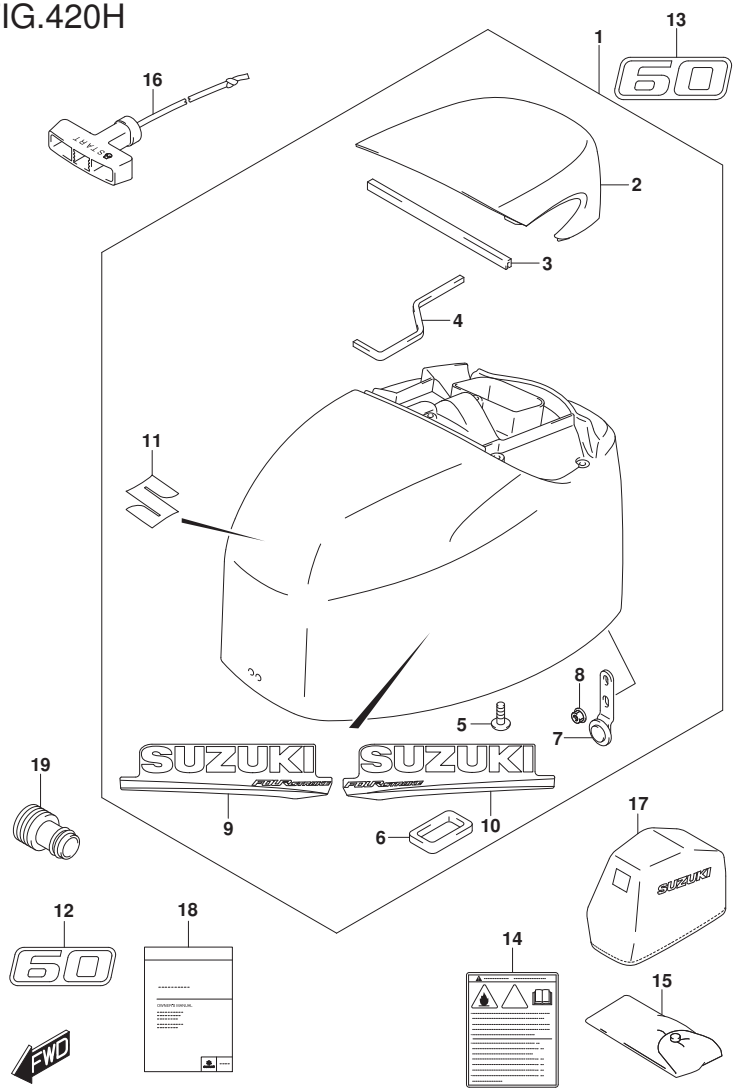

FIG.420H (2-C-11) ENGINE COVER (DF60AQH E01)(DF60ATH E01)(DF60AVT E01)(DF60A

REF NO.	PART NO.	DESCRIPTION	Q'TY	REMARKS
1	61400-88820-YAY	COVER SET, ENGINE (BLACK)	1	
2	61431-88L10-YAY	.HANDLE, TILT UP (BLACK)	1	
3	61438-88L00	.SEAL, TILT UP HANDLE NO.1	1	
4	61439-88L00	.SEAL, TILT UP HANDLE NO.2	1	
5	03542-06169	.SCREW	5	
6	61476-88L00	.SEAL, AIR VENT	1	
7	61610-95J00	.FASTENER	1	
8	09159-06084	.NUT	1	
9	61443-88L20	.STRIPE, ENGINE COVER STBD	1	
10	61453-88L20	.STRIPE, ENGINE COVER PORT	1	
11	68111-18G20	.EMBLEM (S)	1	
12	61422-88L50	MARK, EMBLEM FRONT (60)	1	
13	61435-88L80	MARK, EMBLEM REAR (60)	1	
14	61458-90J00	LABEL, ENGINE COVER	1	
15	09800-81812	TOOL ASSY	1	
16	18210-88L00	KNOB ASSY, STARTER	1	
17	68110-88L01	COVER, WEATHER	1	OPT
18-1	99011-88L70-054	MANUAL, OWNER'S	1	
18-2	99011-88L70-059	MANUAL, OWNER'S	1	
19	17917-87L00	CONNECTOR, FLUSH WATER	1	

DF60AQH E01
DF60ATH E01
DF60AVT E01
DF60AVTH E01

DF60A_E01_018_420H
ENGINE COVER

FIG.420J

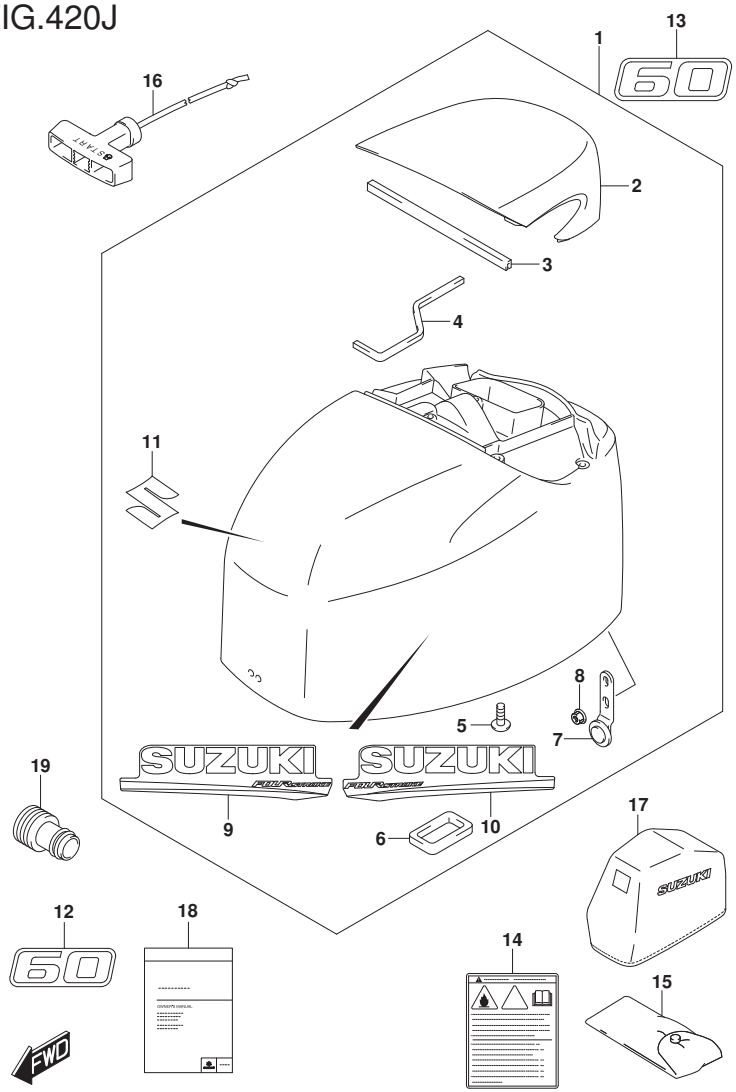

FIG.420J (2-C-12) ENGINE COVER (DF60AQH E40)(DF60ATH E40)(DF60AVT E40)(DF60A

REF NO.	PART NO.	DESCRIPTION	Q'TY	REMARKS
1	61400-88820-YAY	COVER SET, ENGINE (BLACK)	1	
2	61431-88L10-YAY	.HANDLE, TILT UP (BLACK)	1	
3	61438-88L00	.SEAL, TILT UP HANDLE NO.1	1	
4	61439-88L00	.SEAL, TILT UP HANDLE NO.2	1	
5	03542-06169	.SCREW	5	
6	61476-88L00	.SEAL, AIR VENT	1	
7	61610-95J00	.FASTENER	1	
8	09159-06084	.NUT	1	
9	61443-88L20	.STRIPE, ENGINE COVER STBD	1	
10	61453-88L20	.STRIPE, ENGINE COVER PORT	1	
11	68111-18G20	.EMBLEM (S)	1	
12	61422-88L50	MARK, EMBLEM FRONT (60)	1	
13	61435-88L80	MARK, EMBLEM REAR (60)	1	
14	61458-90J00	LABEL, ENGINE COVER	1	
15	09800-81812	TOOL ASSY	1	
16	18210-88L00	KNOB ASSY, STARTER	1	
17	68110-88L01	COVER, WEATHER	1	OPT
18	99011-88L70-059	MANUAL, OWNER'S	1	
19	17917-87L00	CONNECTOR, FLUSH WATER	1	

DF60AQH E40
DF60ATH E40
DF60AVT E40
DF60AVTH E40

DF60A_E01_018_420J
ENGINE COVER

FIG.432A

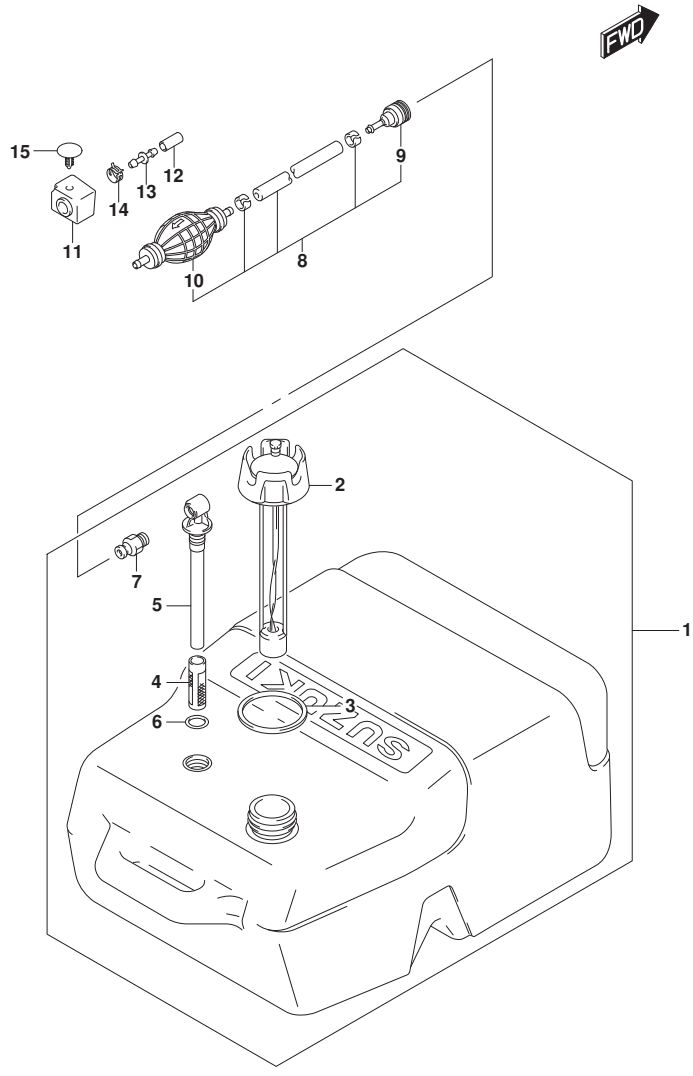

FIG.432A (2-C-13) FUEL TANK

REF NO.	PART NO.	DESCRIPTION	Q'TY	REMARKS
1	65000-95D01	TANK ASSY, FUEL (25L)	1	
2	65520-95D01	.CAP ASSY, FUEL TANK	1	
3	65561-95D00	.GASKET, TANK CAP	1	
4	65831-95D00	.FILTER, OUTLET	1	
5	65890-95D00	.OUTLET ASSY	1	
6	65892-95D00	.O RING, FUEL OUTLET	1	
7	65740-95D01	.PLUG, FUEL CONNECTOR	1	
8	65700-90J15	HOSE, FUEL	1	
9	65750-95500	.SOCKET	1	
10	65770-90J12	.PUMP, SQUEEZE	1	
11	61188-88L00	GROMMET, FUEL HOSE	1	
12	09251-07003	CAP (OD:11.5)	1	
13	09367-08001	JOINT	1	
14	09401-11423	CLIP	1	
15	09409-05312-6GS	CLIP (GRAY)	1	

DF60A_E01_018_432A
FUEL TANK

FIG.442A

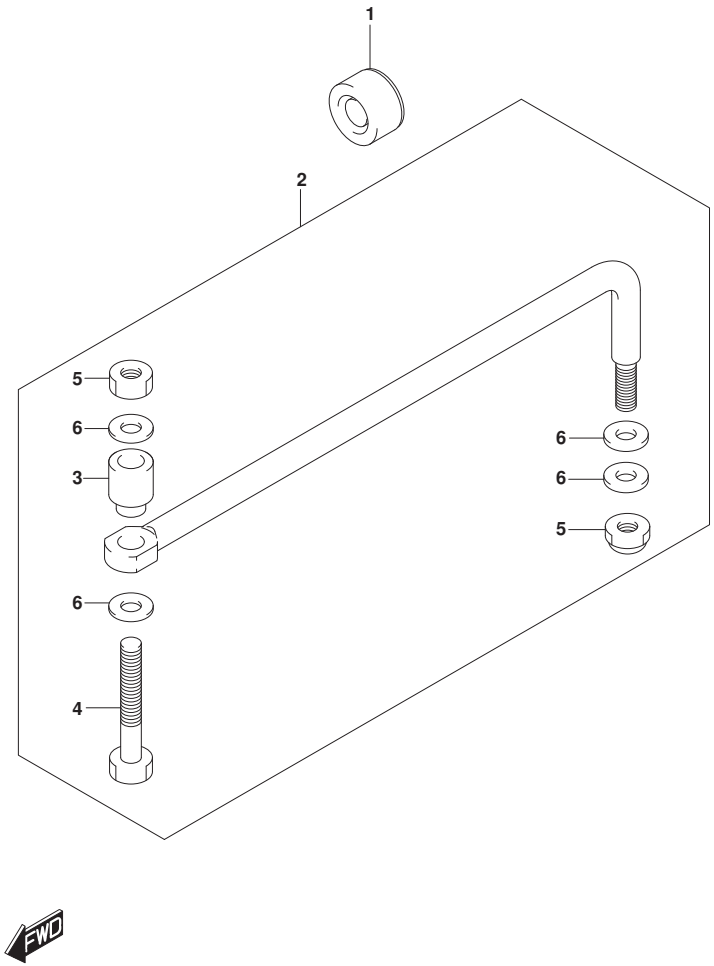

FIG.442A (2-C-14) DRAG LINK (DF40A)(DF40AST)(DF50A)(DF60A)(DF50AVT)(DF60AVT)

REF NO.	PART NO.	DESCRIPTION	Q'TY	REMARKS
1	41161-94400	SEAL, STEERING CABLE	1	
2	67701-87J11	LINK, DRAG	1	
3	67721-87J00	.SPACER	1	
4	67725-99E00	.BOLT, DRAG LINK	1	
5	67726-99E00	.NUT	2	
6	67728-99E00	.WASHER	4	

DF40A E01
DF40AST E34
DF50A E01
DF60A E01
DF60A E40
DF50AVT E01
DF60AVT E01
DF60AVT E40

DF60A_E01_018_442A
DRAG LINK

FIG.444A

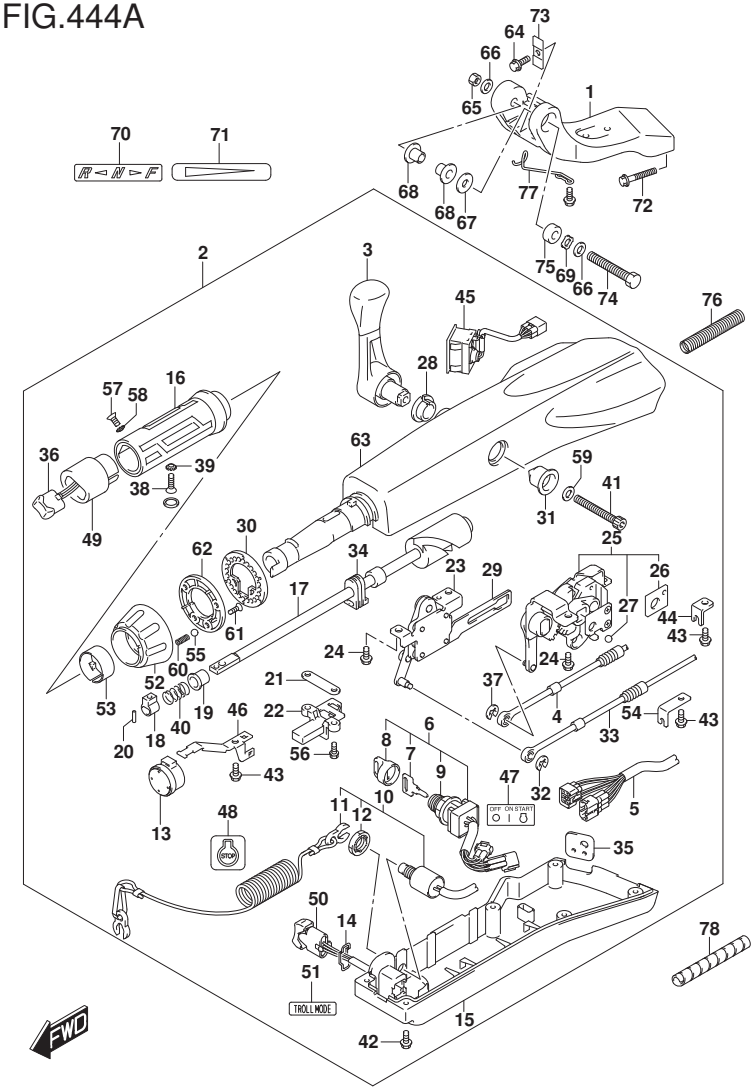

FIG.444A (2-C-15) TILLER HANDLE (DF40AQH)(DF60AQH)

REF NO.	PART NO.	DESCRIPTION	Q'TY	REMARKS
1	43761-88L01-YAY	BRACKET, TILLER HANDLE (BLACK)	1	
2	63110-88L31-YAY	HANDLE ASSY, TILLER (BLACK)	1	
3	21110-88L00	.LEVER, SHIFT	1	
4	23230-88L00	.CABLE, SHIFT	1	
5	36620-88L10	.WIRE ASSY, HANDLE	1	
6	37110-87L01	.SWITCH ASSY, IGNITION	1	
7-1	37141-99E00	..KEY (931)	1	
7-2	37141-99E10	..KEY (932)	1	
7-3	37141-99E20	..KEY (933)	1	
7-4	37141-99E30	..KEY (934)	1	
7-5	37141-99E40	..KEY (935)	1	
7-6	37141-99E50	..KEY (936)	1	
7-7	37141-99E60	..KEY (937)	1	
7-8	37141-99E70	..KEY (938)	1	
7-9	37141-99E80	..KEY (939)	1	
7-10	37141-99E90	..KEY (940)	1	
7-11	37141-99EA0	..KEY (941)	1	
7-12	37141-99EB0	..KEY (942)	1	
8	37143-99E00	..CAP, KEY	1	
9	37149-93J00	..CAP, CYLINDER BODY	1	
10	37820-87L01	.SWITCH ASSY, EMERGENCY	1	
11	37823-92E01	..PLATE, LOCK	1	
12	37826-92J00	..NUT	1	
13	38500-93J90	.BUZZER	1	
14	37852-87J00	.PLATE, TRIM SWITCH	1	
15	63121-88L00	.COVER, UNDER	1	
16	63210-88L00	.GRIP, HANDLE	1	
17	63221-88L00	.SHAFT, THROTTLE	1	

FIG.444A

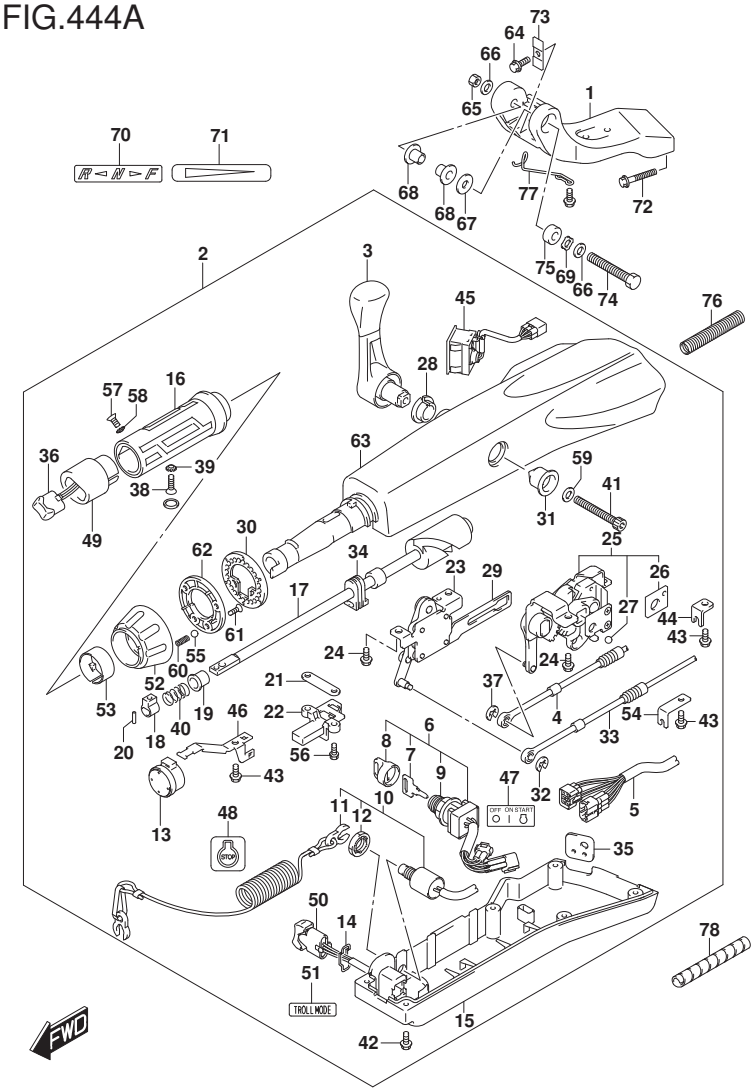

FIG.444A (2-D-2) TILLER HANDLE (DF40AQH)(DF60AQH)

REF NO.	PART NO.	DESCRIPTION	Q'TY	REMARKS
18	63223-92D00	.STOPPER, HANDLE ROD	1	
19	63225-88L00	.BUSH, HANDLE ROD	1	
20	63227-93200	.PIN, HANDLE ROD	1	
21	63235-88L00	.PLATE, THROTTLE SHAFT	1	
22	63246-88L00	.STOPPER THROTTLE ADJ	1	
23	63250-88L00	.ARM ASSY, THROTTLE	1	
24	63251-87J00	.BOLT, SHIFT GEAR ASSY	4	
25	63260-88L00	.GEAR ASSY, SHIFT	1	
26	63272-87J00	..PLATE, BALL GUIDE	1	
27	63273-87J00	..BALL	1	
28	63262-87J00	.BUSH, SHIFT LEVER	1	
29	63271-87J00	.PLATE, LOCK	1	
30	63248-99J00	.PLATE, THROTTLE ADJ NOTCH	1	
31	63261-87J00	.BUSH, SHIFT GEAR	1	
32	63274-87J00	.E RING	1	
33	63610-88L00	.CABLE, THROTTLE	1	
34	37853-88L90	.GROMMET, PTT SWITCH LEAD	1	
35	63626-88L00	.GROMMET, CABLE	1	
36	67263-88L00	.CAP, SWITCH	1	
37	67292-87J00	.E RING	2	
38	09126-06015	.SCREW (6X23)	1	
39	09163-06001	.LOCK WASHER	1	
40	09440-12027	.SPRING	1	
41	21112-88L10	.BOLT SHIFT LEVER	1	
42	09125-05047	.SCREW (5X14)	6	
43	63611-88L00	.BOLT CLAMP BRACKET	3	
44	63612-87J00	.BRACKET, CLAMP	1	
45	34200-87L00	.TACHOMETER ASSY, WITH MONITOR	1	

FIG.444A

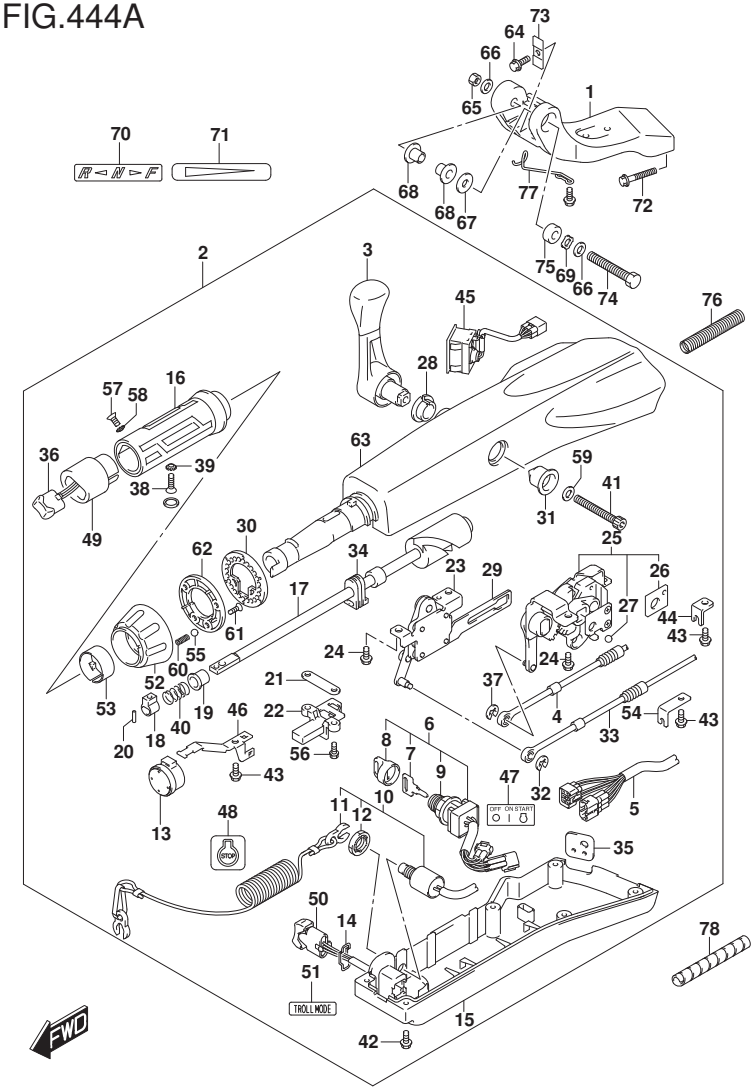

FIG.444A (2-D-3) TILLER HANDLE (DF40AQH)(DF60AQH)

REF NO.	PART NO.	DESCRIPTION	Q'TY	REMARKS
46	36617-88L90	.CLAMP PLATE, MAIN HARNESS	1	
47	37112-88L91	.LABEL, IGNITION SWITCH	1	
48	37835-95D00	.LABEL, STOP	1	
49	37851-88L90	.BASE, PTT SWITCH	1	
50	37861-87L11	.SWITCH, TROLLING CONTROL	1	
51	37864-88L91	.LABEL, TROLL MODE	1	
52	63244-99J00	.KNOB, THROTTLE ADJ	1	
53	63245-99J00	.BUSH, THROTTLE ADJ	1	
54	63612-88L10	.BRACKET, CLAMP SHIFT	1	
55	09260-10006	.BALL	1	
56	63251-88L90	.BOLT	2	
57	37855-88L90	.SCREW, THROTTLE GRIP	1	
58	37854-88L90	.WASHER, THROTTLE GRIP	1	
59	63258-88L00	.WASHER	1	
60	09440-06037	.SPRING	1	
61	03522-05169	.SCREW	3	
62	63247-99J00	.PLATE, THROTTLE ADJ KNOB	1	
63	63111-88L00-YAY	.HOUSING, TILLER HANDLE (BLACK)	1	
64	09116-08137	BOLT (8X22)	1	
65	09159-12014	NUT	1	
66	09160-12066	WASHER (12.5X22X2.5)	2	
67	09160-12124	WASHER (12.5X32X1.5)	1	
68	63115-88L00	BUSH, TILLER HANDLE PIVOT	2	
69	09164-13010	WASHER	1	
70	21131-88L01	MARK, CLUTCH SHIFT	1	
71	63215-93110	MARK, HANDLE GRIP	1	
72	09116-10150	BOLT (10X55)	2	

FIG.444A

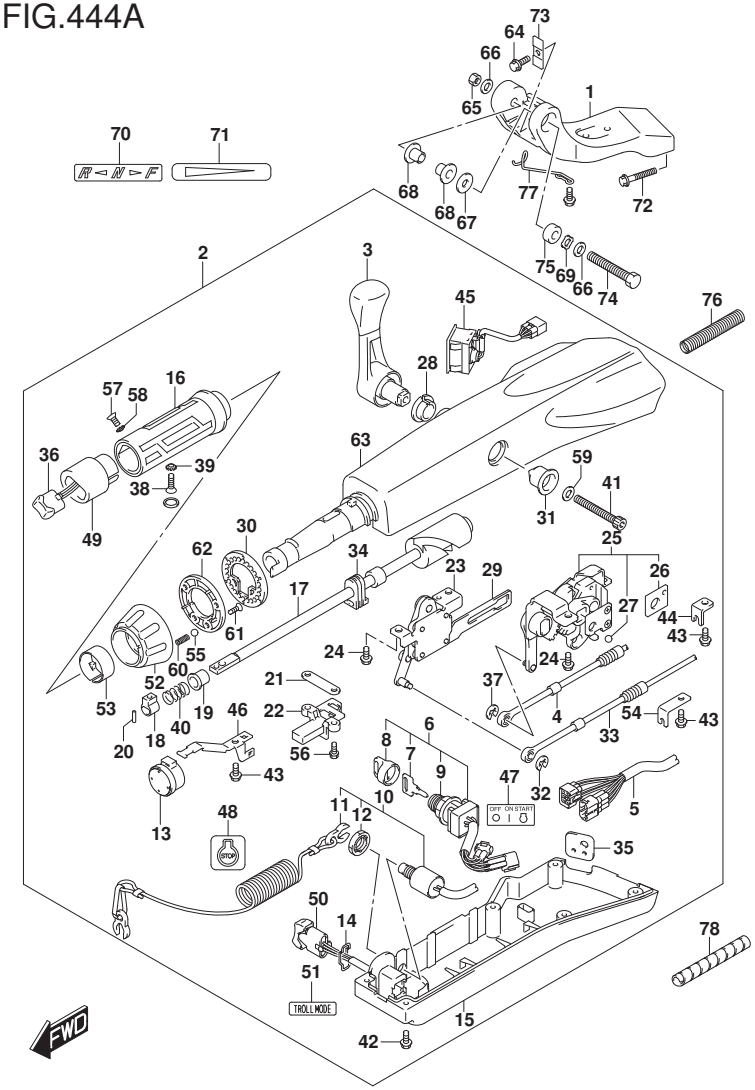

FIG.444A (2-D-4) TILLER HANDLE (DF40AQH)(DF60AQH)

REF NO.	PART NO.	DESCRIPTION	Q'TY	REMARKS
73	63132-88L00	STOPPER, TILLER HANDLE	1	
74	43762-88L00	BOLT, TILLER HANDLE PIVOT	1	
75	43768-88L00	SPACER, TILLER HANDLE	1	
76	33834-88L00	TUBE, CABLE PROTECTOR	1	
77	65793-88L00	HOLDER, FUEL HOSE	1	
78	33833-91J00	TUBE, THROTTLE CABLE (L:250)	1	L:250->150

DF40AQH E01
DF60AQH E01
DF60AQH E40

FIG.444B

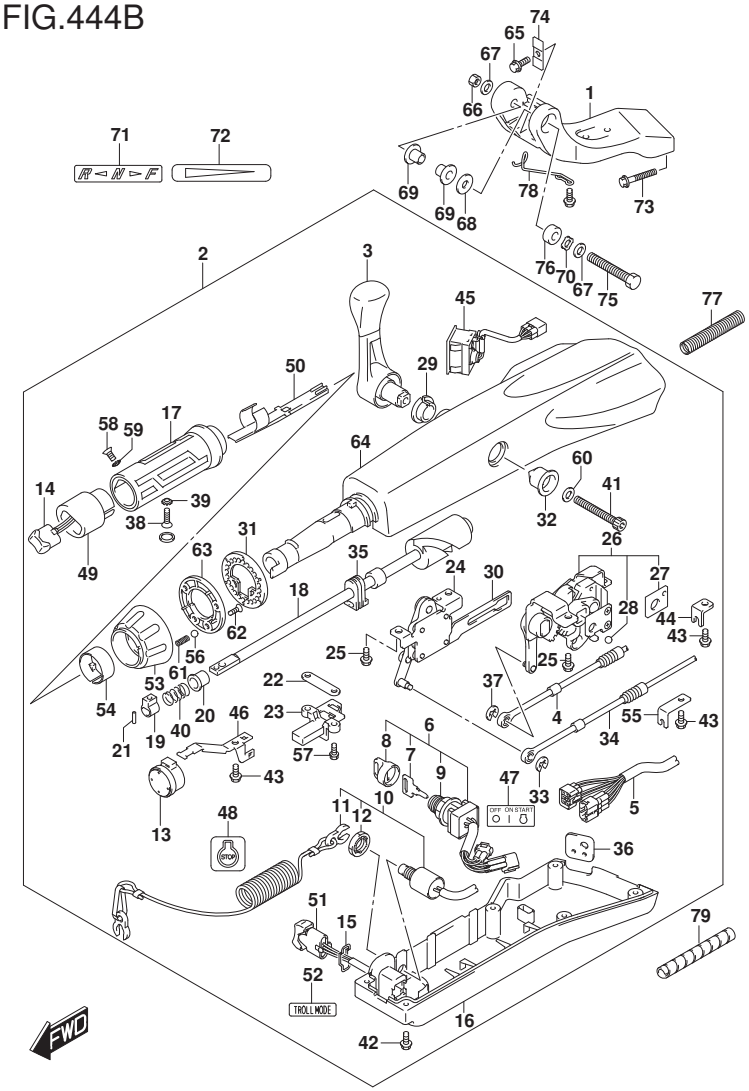

FIG.444B (2-D-5) TILLER HANDLE (DF40ATH)(DF50ATH)

REF NO.	PART NO.	DESCRIPTION	Q'TY	REMARKS
1	43761-88L01-YAY	BRACKET, TILLER HANDLE (BLACK)	1	
2	63110-88L22-YAY	HANDLE ASSY, TILLER (BLACK)	1	
3	21110-88L00	.LEVER, SHIFT	1	
4	23230-88L00	.CABLE, SHIFT	1	
5	36620-88L10	.WIRE ASSY, HANDLE	1	
6	37110-87L01	.SWITCH ASSY, IGNITION	1	
7-1	37141-99E00	..KEY (931)	1	
7-2	37141-99E10	..KEY (932)	1	
7-3	37141-99E20	..KEY (933)	1	
7-4	37141-99E30	..KEY (934)	1	
7-5	37141-99E40	..KEY (935)	1	
7-6	37141-99E50	..KEY (936)	1	
7-7	37141-99E60	..KEY (937)	1	
7-8	37141-99E70	..KEY (938)	1	
7-9	37141-99E80	..KEY (939)	1	
7-10	37141-99E90	..KEY (940)	1	
7-11	37141-99EA0	..KEY (941)	1	
7-12	37141-99EB0	..KEY (942)	1	
8	37143-99E00	..CAP, KEY	1	
9	37149-93J00	..CAP, CYLINDER BODY	1	
10	37820-87L01	.SWITCH ASSY, EMERGENCY	1	
11	37823-92E01	..PLATE, LOCK	1	
12	37826-92J00	..NUT	1	
13	38500-93J90	.BUZZER	1	
14	37850-87L01	.SWITCH ASSY, PTT	1	
15	37852-87J00	.PLATE, TRIM SWITCH	1	
16	63121-88L00	.COVER, UNDER	1	
17	63210-88L00	.GRIP, HANDLE	1	
18	63221-88L00	.SHAFT, THROTTLE	1	

FIG.444B

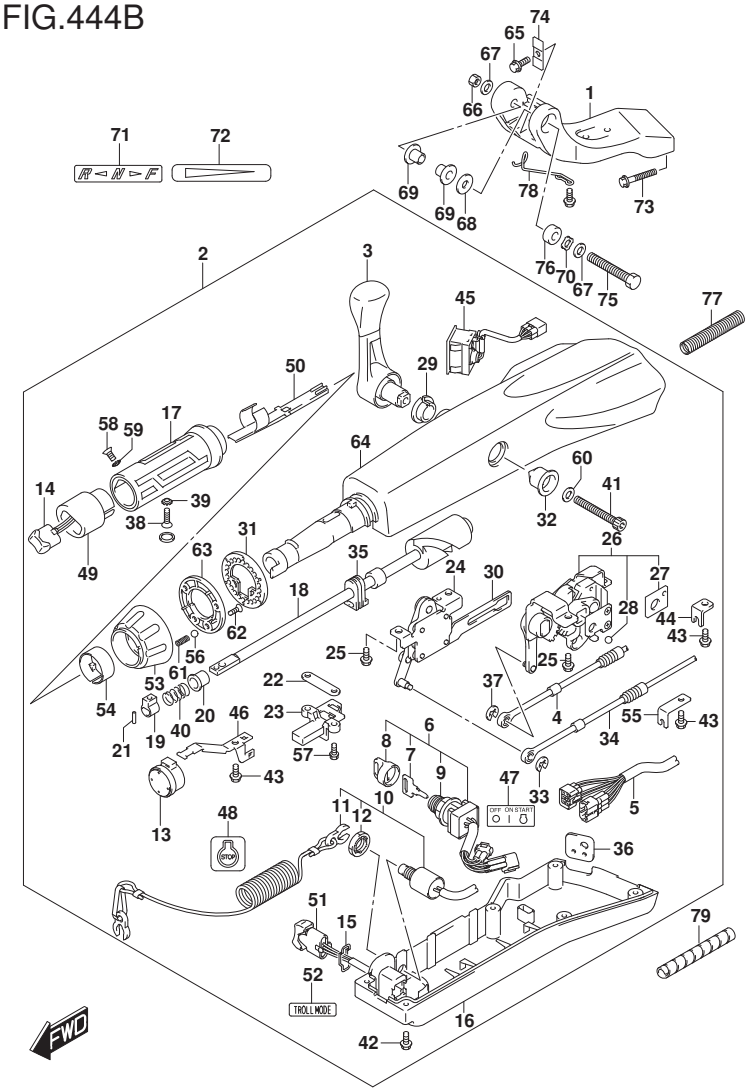

FIG.444B (2-D-6) TILLER HANDLE (DF40ATH)(DF50ATH)

REF NO.	PART NO.	DESCRIPTION	Q'TY	REMARKS
19	63223-92D00	.STOPPER, HANDLE ROD	1	
20	63225-88L00	.BUSH, HANDLE ROD	1	
21	63227-93200	.PIN, HANDLE ROD	1	
22	63235-88L00	.PLATE, THROTTLE SHAFT	1	
23	63246-88L00	.STOPPER THROTTLE ADJ	1	
24	63250-88L00	.ARM ASSY, THROTTLE	1	
25	63251-87J00	.BOLT, SHIFT GEAR ASSY	4	
26	63260-88L00	.GEAR ASSY, SHIFT	1	
27	63272-87J00	..PLATE, BALL GUIDE	1	
28	63273-87J00	..BALL	1	
29	63262-87J00	.BUSH, SHIFT LEVER	1	
30	63271-87J00	.PLATE, LOCK	1	
31	63248-99J00	.PLATE, THROTTLE ADJ NOTCH	1	
32	63261-87J00	.BUSH, SHIFT GEAR	1	
33	63274-87J00	.E RING	1	
34	63610-88L00	.CABLE, THROTTLE	1	
35	37853-88L90	.GROMMET, PTT SWITCH LEAD	1	
36	63626-88L00	.GROMMET, CABLE	1	
37	67292-87J00	.E RING	2	
38	09126-06015	.SCREW (6X23)	1	
39	09163-06001	.LOCK WASHER	1	
40	09440-12027	.SPRING	1	
41	21112-88L00	.BOLT SHIFT LEVER	1	
42	09125-05047	.SCREW (5X14)	6	
43	63611-88L00	.BOLT CLAMP BRACKET	3	
44	63612-87J00	.BRACKET, CLAMP	1	
45	34200-87L00	.TACHOMETER ASSY, WITH MONITOR	1	
46	36617-88L90	.CLAMP PLATE, MAIN HARNESS	1	
47	37112-88L91	.LABEL, IGNITION SWITCH	1	

FIG.444B

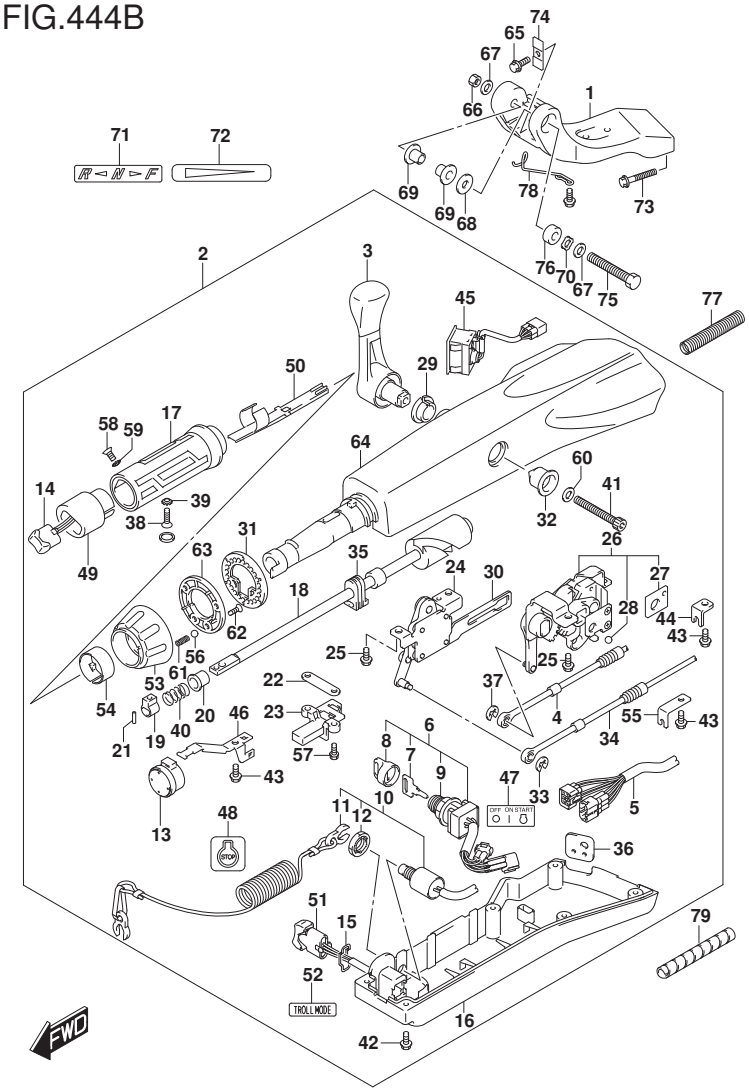

FIG.444B (2-D-7) TILLER HANDLE (DF40ATH)(DF50ATH)

REF NO.	PART NO.	DESCRIPTION	Q'TY	REMARKS
48	37835-95D00	.LABEL, STOP	1	
49	37851-88L90	.BASE, PTT SWITCH	1	
50	37852-88L90	.HARNESS, GUIDE	1	
51	37861-87L11	.SWITCH, TROLLING CONTROL	1	
52	37864-88L91	.LABEL, TROLL MODE	1	
53	63244-99J00	.KNOB, THROTTLE ADJ	1	
54	63245-99J00	.BUSH, THROTTLE ADJ	1	
55	63612-88L10	.BRACKET, CLAMP SHIFT	1	
56	09260-10006	.BALL	1	
57	63251-88L90	.BOLT	2	
58	37855-88L90	.SCREW, THROTTLE GRIP	1	
59	37854-88L90	.WASHER, THROTTLE GRIP	1	
60	63258-88L00	.WASHER	1	
61	09440-06037	.SPRING	1	
62	03522-05169	.SCREW	3	
63	63247-99J00	.PLATE,THROTTLE ADJ KNOB	1	
64	63111-88L00-YAY	.HOUSING, TILLER HANDLE (BLACK)	1	
65	09116-08137	BOLT (8X22)	1	
66	09159-12014	NUT	1	
67	09160-12066	WASHER (12.5X22X2.5)	2	
68	09160-12124	WASHER (12.5X32X1.5)	1	
69	63115-88L00	BUSH, TILLER HANDLE PIVOT	2	
70	09164-13010	WASHER	1	
71	21131-88L01	MARK, CLUTCH SHIFT	1	
72	63215-93110	MARK, HANDLE GRIP	1	
73	09116-10150	BOLT (10X55)	2	
74	63132-88L00	STOPPER, TILLER HANDLE	1	
75	43762-88L00	BOLT, TILLER HANDLE PIVOT	1	

FIG.444B

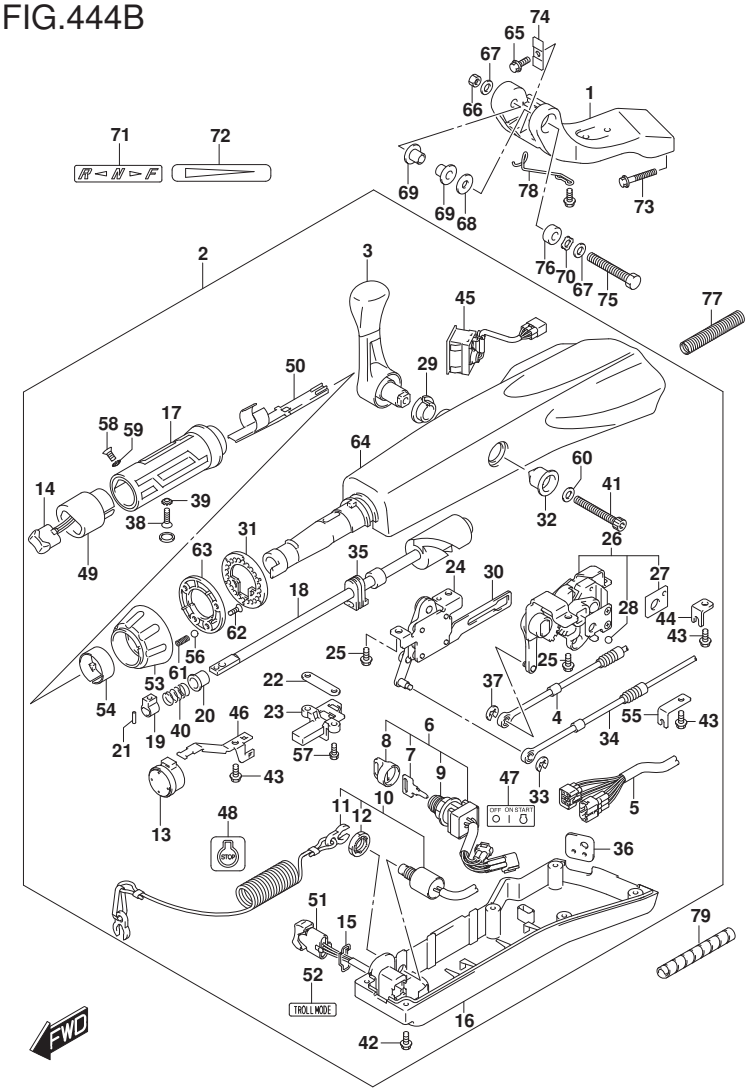

FIG.444B (2-D-8) TILLER HANDLE (DF40ATH)(DF50ATH)

REF NO.	PART NO.	DESCRIPTION	Q'TY	REMARKS
76	43768-88L00	SPACER, TILLER HANDLE	1	
77	33834-88L00	TUBE, CABLE PROTECTOR	1	
78	65793-88L00	HOLDER, FUEL HOSE	1	
79	33833-91J00	TUBE, THROTTLE CABLE (L:250)	1	L:250->150

DF40ATH E01
DF50ATH E01

FIG.444C

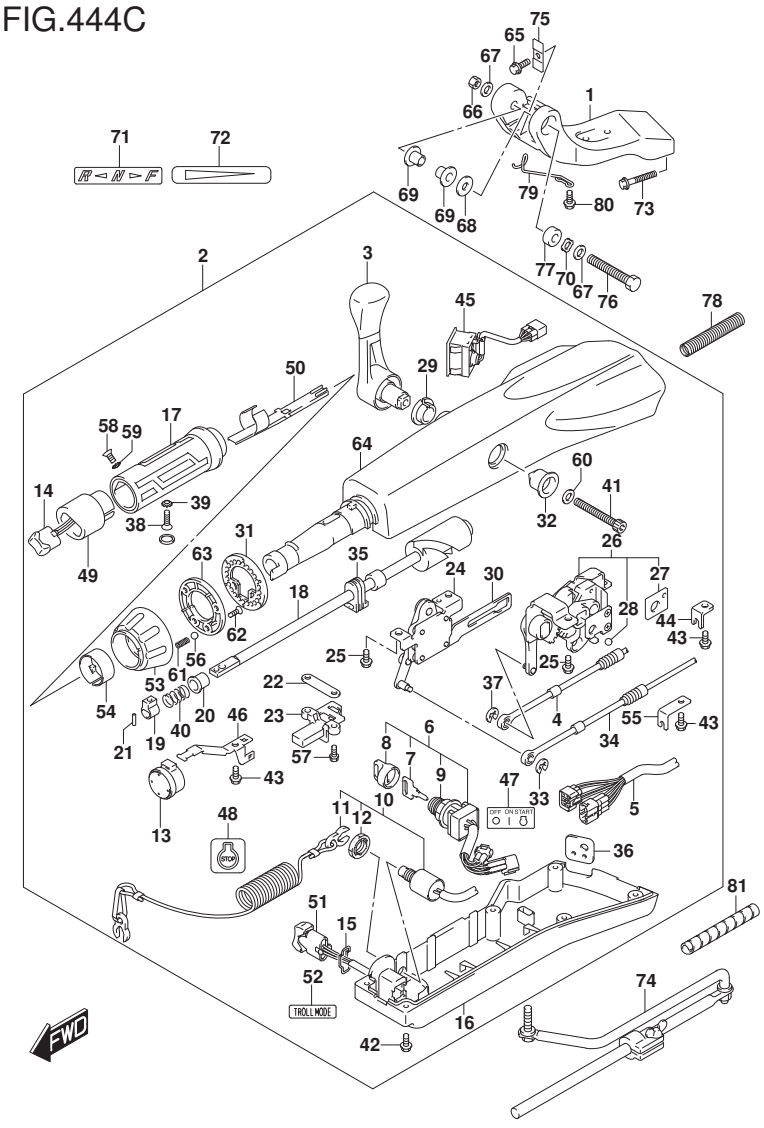

FIG.444C (2-D-9) TILLER HANDLE (DF60ATH)(DF50AVTH)(DF60AVTH)

REF NO.	PART NO.	DESCRIPTION	Q'TY	REMARKS
1	43761-88L01-YAY	BRACKET, TILLER HANDLE (BLACK)	1	
2	63110-88L22-YAY	HANDLE ASSY, TILLER (BLACK)	1	
3	21110-88L00	.LEVER, SHIFT	1	
4	23230-88L00	.CABLE, SHIFT	1	
5	36620-88L10	.WIRE ASSY, HANDLE	1	
6	37110-87L01	.SWITCH ASSY, IGNITION	1	
7-1	37141-99E00	..KEY (931)	1	
7-2	37141-99E10	..KEY (932)	1	
7-3	37141-99E20	..KEY (933)	1	
7-4	37141-99E30	..KEY (934)	1	
7-5	37141-99E40	..KEY (935)	1	
7-6	37141-99E50	..KEY (936)	1	
7-7	37141-99E60	..KEY (937)	1	
7-8	37141-99E70	..KEY (938)	1	
7-9	37141-99E80	..KEY (939)	1	
7-10	37141-99E90	..KEY (940)	1	
7-11	37141-99EA0	..KEY (941)	1	
7-12	37141-99EB0	..KEY (942)	1	
8	37143-99E00	..CAP, KEY	1	
9	37149-93J00	..CAP, CYLINDER BODY	1	
10	37820-87L01	.SWITCH ASSY, EMERGENCY	1	
11	37823-92E01	..PLATE, LOCK	1	
12	37826-92J00	..NUT	1	
13	38500-93J90	.BUZZER	1	
14	37850-87L01	.SWITCH ASSY, PTT	1	
15	37852-87J00	.PLATE, TRIM SWITCH	1	

DF60A_E01_018_444C
TILLER HANDLE

FIG.444C

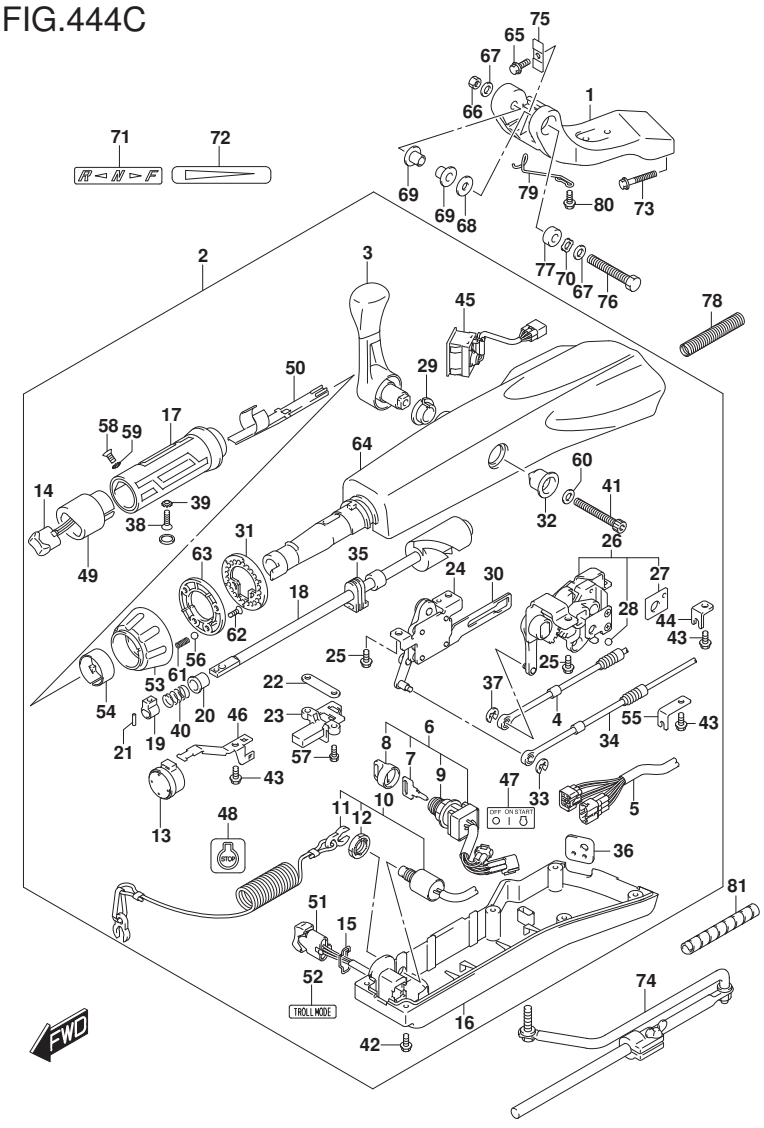

FIG.444C (2-D-10) TILLER HANDLE (DF60ATH)(DF50AVTH)(DF60AVTH)

REF NO.	PART NO.	DESCRIPTION	Q'TY	REMARKS
16	63121-88L00	.COVER, UNDER	1	
17	63210-88L00	.GRIP, HANDLE	1	
18	63221-88L00	.SHAFT, THROTTLE	1	
19	63223-92D00	.STOPPER, HANDLE ROD	1	
20	63225-88L00	.BUSH, HANDLE ROD	1	
21	63227-93200	.PIN, HANDLE ROD	1	
22	63235-88L00	.PLATE, THROTTLE SHAFT	1	
23	63246-88L00	.STOPPER THROTTLE ADJ	1	
24	63250-88L00	.ARM ASSY, THROTTLE	1	
25	63251-87J00	.BOLT, SHIFT GEAR ASSY	4	
26	63260-88L00	.GEAR ASSY, SHIFT	1	
27	63272-87J00	..PLATE, BALL GUIDE	1	
28	63273-87J00	..BALL	1	
29	63262-87J00	.BUSH, SHIFT LEVER	1	
30	63271-87J00	.PLATE, LOCK	1	
31	63248-99J00	.PLATE, THROTTLE ADJ NOTCH	1	
32	63261-87J00	.BUSH, SHIFT GEAR	1	
33	63274-87J00	.E RING	1	
34	63610-88L00	.CABLE, THROTTLE	1	
35	37853-88L90	.GROMMET, PTT SWITCH LEAD	1	
36	63626-88L00	.GROMMET, CABLE	1	
37	67292-87J00	.E RING	2	
38	09126-06015	.SCREW (6X23)	1	
39	09163-06001	.LOCK WASHER	1	
40	09440-12027	.SPRING	1	
41	21112-88L00	.BOLT SHIFT LEVER	1	

FIG.444C

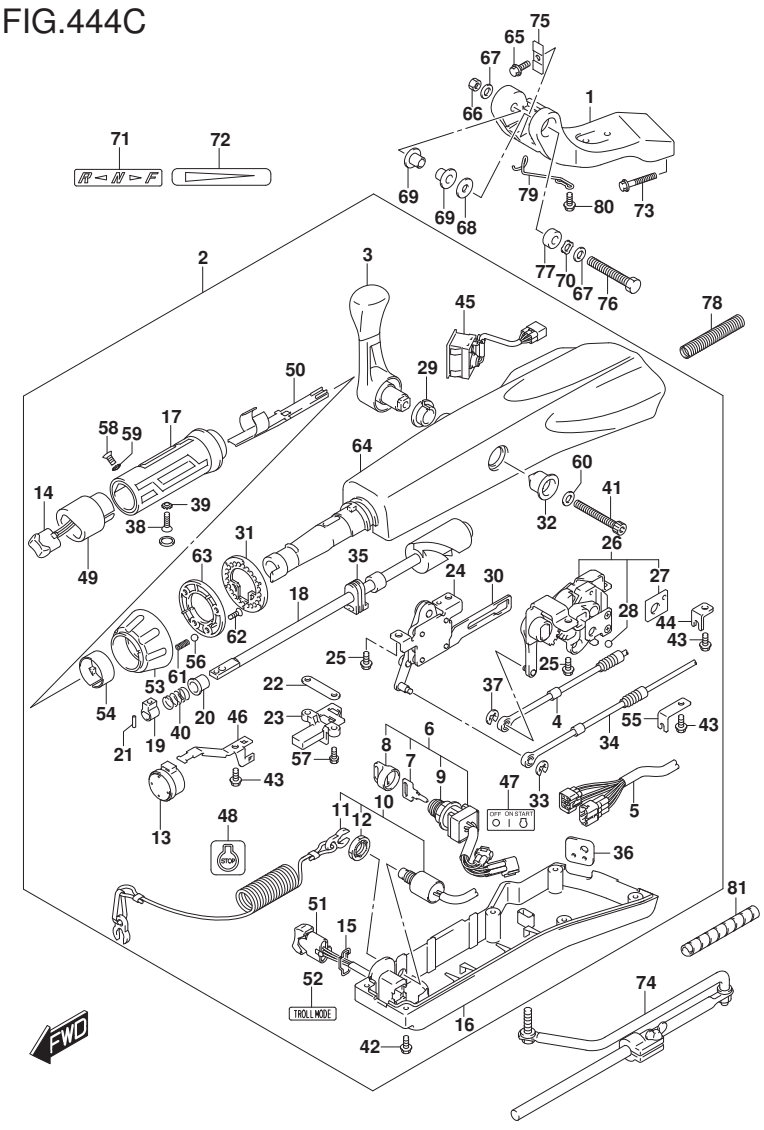

FIG.444C (2-D-11) TILLER HANDLE (DF60ATH)(DF50AVTH)(DF60AVTH)

REF NO.	PART NO.	DESCRIPTION	Q'TY	REMARKS
42	09125-05047	.SCREW (5X14)	6	
43	63611-88L00	.BOLT CLAMP BRACKET	3	
44	63612-87J00	.BRACKET, CLAMP	1	
45	34200-87L00	.TACHOMETER ASSY, WITH MONITOR	1	
46	36617-88L90	.CLAMP PLATE, MAIN HARNESS	1	
47	37112-88L91	.LABEL, IGNITION SWITCH	1	
48	37835-95D00	.LABEL, STOP	1	
49	37851-88L90	.BASE, PTT SWITCH	1	
50	37852-88L90	.HARNESS, GUIDE	1	
51	37861-87L11	.SWITCH, TROLLING CONTROL	1	
52	37864-88L91	.LABEL, TROLL MODE	1	
53	63244-99J00	.KNOB, THROTTLE ADJ	1	
54	63245-99J00	.BUSH, THROTTLE ADJ	1	
55	63612-88L10	.BRACKET, CLAMP SHIFT	1	
56	09260-10006	.BALL	1	
57	63251-88L90	.BOLT	2	
58	37855-88L90	.SCREW, THROTTLE GRIP	1	
59	37854-88L90	.WASHER, THROTTLE GRIP	1	
60	63258-88L00	.WASHER	1	
61	09440-06037	.SPRING	1	
62	03522-05169	.SCREW	3	
63	63247-99J00	.PLATE,THROTTLE ADJ KNOB	1	
64	63111-88L00-YAY	.HOUSING, TILLER HANDLE (BLACK)	1	
65	09116-08137	BOLT (8X22)	1	
66	09159-12014	NUT	1	

DF60A_E01_018_444C
TILLER HANDLE

FIG.444C

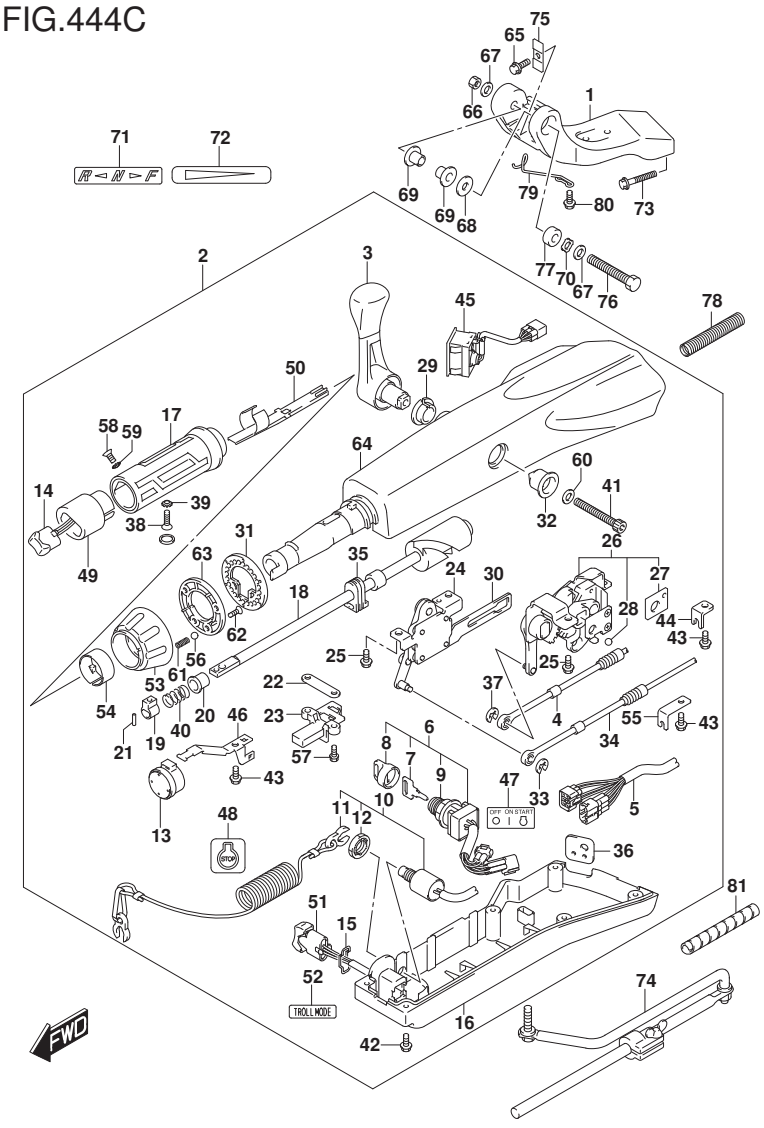

FIG.444C (2-D-12) TILLER HANDLE (DF60ATH)(DF50AVTH)(DF60AVTH)

REF NO.	PART NO.	DESCRIPTION	Q'TY	REMARKS
67	09160-12066	WASHER (12.5X22X2.5)	2	
68	09160-12124	WASHER (12.5X32X1.5)	1	
69	63115-88L00	BUSH, TILLER HANDLE PIVOT	2	
70	09164-13010	WASHER	1	
71	21131-88L01	MARK, CLUTCH SHIFT	1	
72	63215-93110	MARK, HANDLE GRIP	1	
73	09116-10150	BOLT (10X55)	2	
74	43770-99E03	ADJUSTER ASSY, STEERING	1	
75	63132-88L00	STOPPER, TILLER HANDLE	1	
76	43762-88L00	BOLT, TILLER HANDLE PIVOT	1	
77	43768-88L00	SPACER, TILLER HANDLE	1	
78	33834-88L00	TUBE, CABLE PROTECTOR	1	
79	65793-88L00	HOLDER, FUEL HOSE	1	
80	09116-06237	BOLT (6X15)	2	
81	33833-91J00	TUBE, THROTTLE CABLE (L:250)	1	L:250->150

DF60ATH E01
DF60ATH E40
DF50AVTH E01
DF60AVTH E01
DF60AVTH E40

DF60A_E01_018_444C
TILLER HANDLE

FIG.501A

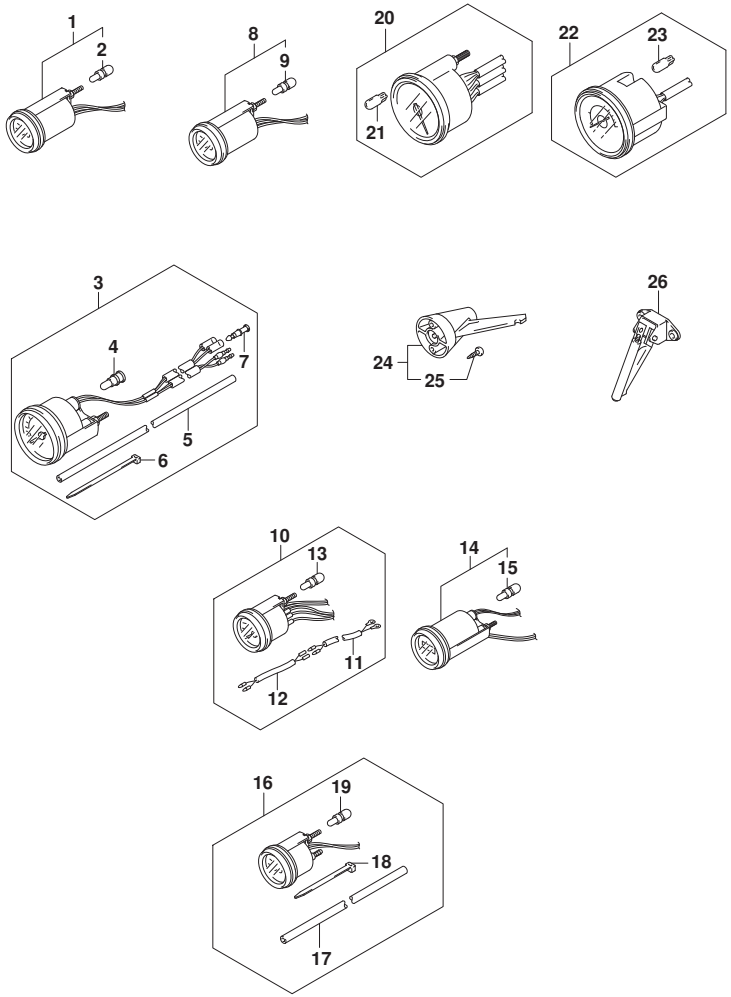

FIG.501A (2-D-13) OPT:METER (DF40A)(DF40AST)(DF50A)(DF60A)(DF50AVT)(DF60AVT)

REF NO.	PART NO.	DESCRIPTION	Q'TY	REMARKS
1-1	34800-93J00	METER ASSY, TRIM	1	BLACK
1-2	34800-93J11	METER ASSY, TRIM	1	WHITE
2	09471-12108	.BULB (12V,1.7W)	1	
3-1	34100-93J00	SPEEDOMETER ASSY	1	MAX 130KM/H BLACK
3-2	34100-93J11	SPEEDOMETER ASSY	1	MAX 130KM/H WHITE
3-3	34100-93J20	SPEEDOMETER ASSY	1	MAX 80KM/H BLACK
3-4	34100-93J31	SPEEDOMETER ASSY	1	MAX 80KM/H WHITE
3-5	34100-93J40	SPEEDOMETER ASSY	1	MAX 45KNOTS BLACK
3-6	34100-93J51	SPEEDOMETER ASSY	1	MAX 45KNOTS WHITE
3-7	34100-93J60	SPEEDOMETER ASSY	1	MAX 65KNOTS WHITE
4	09471-12028	.BULB (12V,3.4W)	1	
5	34191-92E00	.TUBE	1	
6	09407-14407	.CLAMP (L:145)	2	
7	36615-96300	.TERMINAL, RESIN	2	
8-1	34600-93J00	METER ASSY, VOLTAGE	1	BLACK
8-2	34600-93J11	METER ASSY, VOLTAGE	1	WHITE
9	09471-12103	.BULB (12V,3W,T6.5)	1	
10-1	34300-93J00	GAUGE ASSY, FUEL	1	BLACK
10-2	34300-93J11	GAUGE ASSY, FUEL	1	WHITE
11	34310-92E00	.LEAD, FUEL GAUGE	1	
12	34360-92E00	.ADAPTER, FUEL GAUGE	1	
13	09471-12103	.BULB (12V,3W,T6.5)	1	

DF60A_E01_018_501A
OPT:METER

FIG.501A

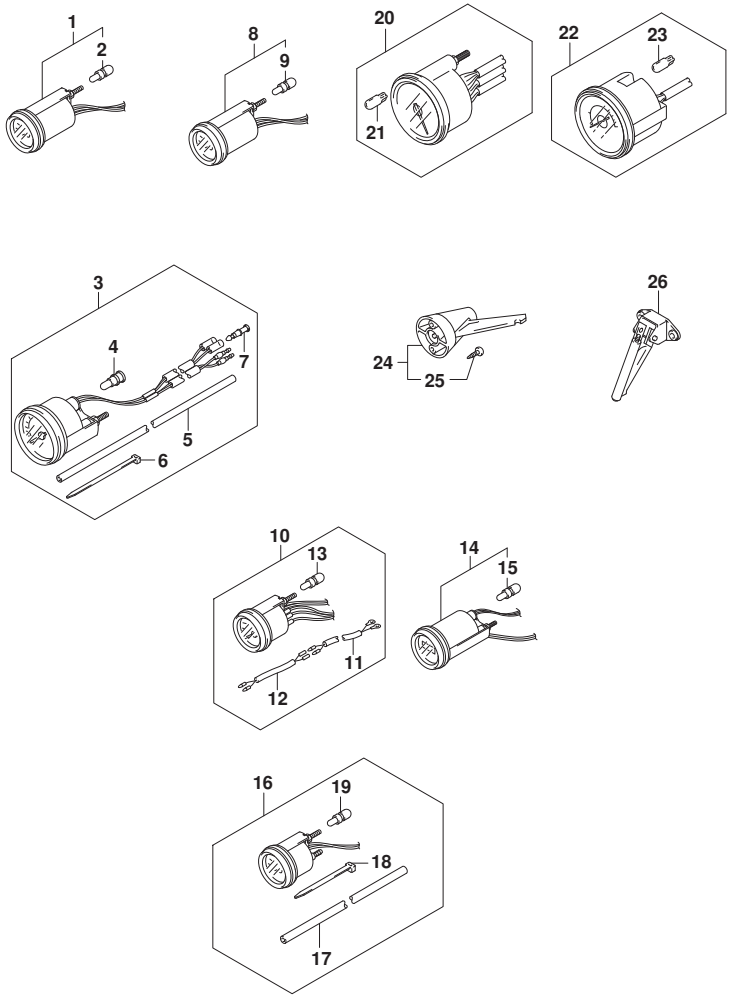

FIG.501A (2-D-14) OPT:METER (DF40A)(DF40AST)(DF50A)(DF60A)(DF50AVT)(DF60AVT)

REF NO.	PART NO.	DESCRIPTION	Q'TY	REMARKS
14-1	34500-93J00	METER ASSY, HOUR	1	BLACK
14-2	34500-93J11	METER ASSY, HOUR	1	WHITE
15	09471-12103	.BULB (12V,3W,T6.5)	1	
16-1	34650-93J20	GAUGE ASSY, WATER PRESSURE	1	15PSI BLACK
16-2	34650-93J31	GAUGE ASSY, WATER PRESSURE	1	15PSI WHITE
17	34191-92E00	.TUBE	1	
18	09407-14407	.CLAMP (L:145)	2	
19	09471-12103	.BULB (12V,3W,T6.5)	1	
20-1	34200-93J00	TACHOMETER ASSY, WITH MONITOR	1	BLACK
20-2	34200-93J12	TACHOMETER ASSY, WITH MONITOR	1	WHITE
21	09471-12077	.BULB (12V,1.7W)	1	
22-1	34200-93J40	TACHOMETER ASSY, WITH MONITOR	1	BLACK
22-2	34200-93J51	TACHOMETER ASSY, WITH MONITOR	1	WHITE
23	09471-12077	.BULB (12V,1.7W)	1	
24	34190-95500	SENDER ASSY, SPEEDOMETER	1	
25	03112-0630B	.SCREW	2	
26	34190-87D00	SENDER, SPEEDOMETER	1	

DF40A E01
DF40AST E34
DF50A E01
DF60A E01
DF60A E40
DF50AVT E01
DF60AVT E01
DF60AVT E40

DF60A_E01_018_501A
OPT:METER

FIG.501B

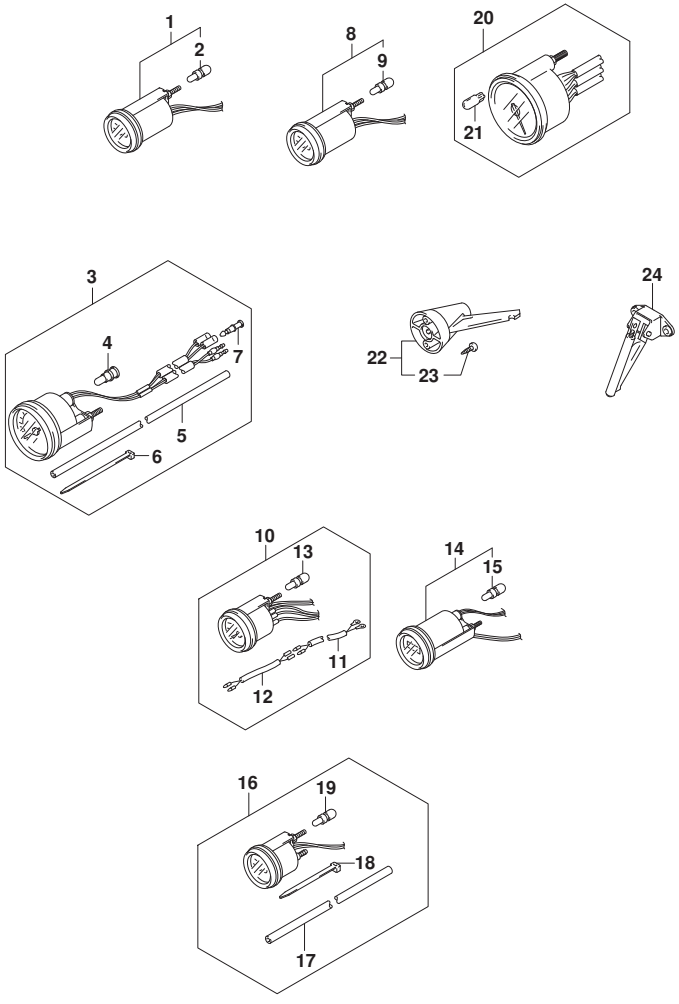

FIG.501B (2-D-15) OPT:METER (DF40AQH)(DF40ATH)(DF50ATH)

REF NO.	PART NO.	DESCRIPTION	Q'TY	REMARKS
1-1	34800-93J00	METER ASSY, TRIM	1	BLACK
1-2	34800-93J11	METER ASSY, TRIM	1	WHITE
2	09471-12108	.BULB (12V,1.7W)	1	
3-1	34100-93J00	SPEEDOMETER ASSY	1	MAX 130KM/H BLACK
3-2	34100-93J11	SPEEDOMETER ASSY	1	MAX 130KM/H WHITE
3-3	34100-93J20	SPEEDOMETER ASSY	1	MAX 80KM/H BLACK
3-4	34100-93J31	SPEEDOMETER ASSY	1	MAX 80KM/H WHITE
3-5	34100-93J40	SPEEDOMETER ASSY	1	MAX 45KNOTS BLACK
3-6	34100-93J51	SPEEDOMETER ASSY	1	MAX 45KNOTS WHITE
3-7	34100-93J60	SPEEDOMETER ASSY	1	MAX 65KNOTS WHITE
4	09471-12028	.BULB (12V,3.4W)	1	
5	34191-92E00	.TUBE	1	
6	09407-14407	.CLAMP (L:145)	2	
7	36615-96300	.TERMINAL, RESIN	2	
8-1	34600-93J00	METER ASSY, VOLTAGE	1	BLACK
8-2	34600-93J11	METER ASSY, VOLTAGE	1	WHITE
9	09471-12103	.BULB (12V,3W,T6.5)	1	
10-1	34300-93J00	GAUGE ASSY, FUEL	1	BLACK
10-2	34300-93J11	GAUGE ASSY, FUEL	1	WHITE
11	34310-92E00	.LEAD, FUEL GAUGE	1	
12	34360-92E00	.ADAPTER, FUEL GAUGE	1	
13	09471-12103	.BULB (12V,3W,T6.5)	1	
14-1	34500-93J00	METER ASSY, HOUR	1	BLACK
14-2	34500-93J11	METER ASSY, HOUR	1	WHITE
15	09471-12103	.BULB (12V,3W,T6.5)	1	

DF60A_E01_018_501B
OPT:METER

FIG.501B

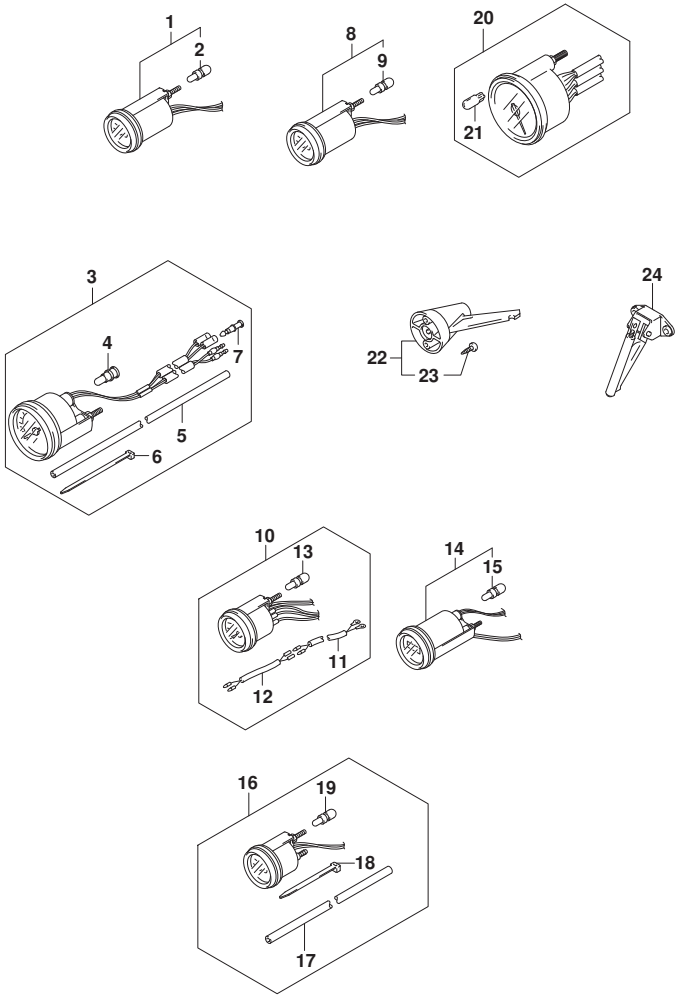

FIG.501B (2-E-2) OPT:METER (DF40AQH)(DF40ATH)(DF50ATH)

REF NO.	PART NO.	DESCRIPTION	Q'TY	REMARKS
16-1	34650-93J20	GAUGE ASSY, WATER PRESSURE	1	15PSI BLACK
16-2	34650-93J31	GAUGE ASSY, WATER PRESSURE	1	15PSI WHITE
17	34191-92E00	.TUBE	1	
18	09407-14407	.CLAMP (L:145)	2	
19	09471-12103	.BULB (12V,3W,T6.5)	1	
20-1	34200-93J00	TACHOMETER ASSY, WITH MONITOR	1	BLACK
20-2	34200-93J12	TACHOMETER ASSY, WITH MONITOR	1	WHITE
21	09471-12077	.BULB (12V,1.7W)	1	
22	34190-95500	SENDER ASSY, SPEEDOMETER	1	
23	03112-0630B	.SCREW	2	
24	34190-87D00	SENDER, SPEEDOMETER	1	

DF40AQH E01
DF40ATH E01
DF50ATH E01

DF60A_E01_018_501B
OPT:METER

FIG.501C

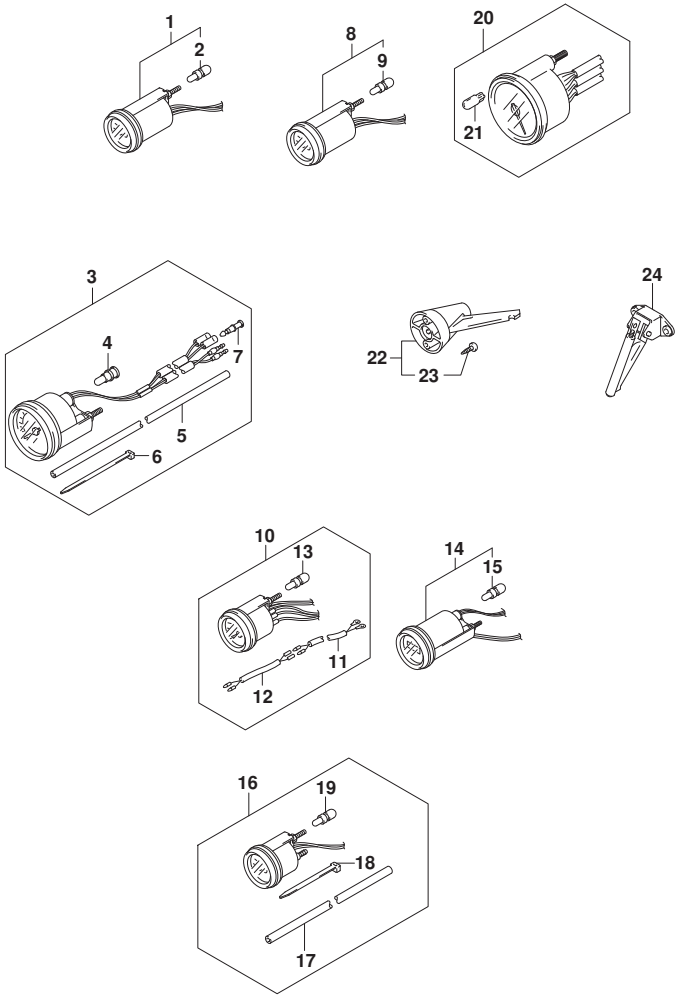

FIG.501C (2-E-3) OPT:METER (DF60AQH)(DF60ATH)(DF50AVTH)(DF60AVTH)

REF NO.	PART NO.	DESCRIPTION	Q'TY	REMARKS
1-1	34800-93J00	METER ASSY, TRIM	1	BLACK
1-2	34800-93J11	METER ASSY, TRIM	1	WHITE
2	09471-12108	.BULB (12V,1.7W)	1	
3-1	34100-93J00	SPEEDOMETER ASSY	1	MAX 130KM/H BLACK
3-2	34100-93J11	SPEEDOMETER ASSY	1	MAX 130KM/H WHITE
3-3	34100-93J20	SPEEDOMETER ASSY	1	MAX 80KM/H BLACK
3-4	34100-93J31	SPEEDOMETER ASSY	1	MAX 80KM/H WHITE
3-5	34100-93J40	SPEEDOMETER ASSY	1	MAX 45KNOTS BLACK
3-6	34100-93J51	SPEEDOMETER ASSY	1	MAX 45KNOTS WHITE
3-7	34100-93J60	SPEEDOMETER ASSY	1	MAX 65KNOTS WHITE
4	09471-12028	.BULB (12V,3.4W)	1	
5	34191-92E00	.TUBE	1	
6	09407-14407	.CLAMP (L:145)	2	
7	36615-96300	.TERMINAL, RESIN	2	
8-1	34600-93J00	METER ASSY, VOLTAGE	1	BLACK
8-2	34600-93J11	METER ASSY, VOLTAGE	1	WHITE
9	09471-12103	.BULB (12V,3W,T6.5)	1	
10-1	34300-93J00	GAUGE ASSY, FUEL	1	BLACK
10-2	34300-93J11	GAUGE ASSY, FUEL	1	WHITE
11	34310-92E00	.LEAD, FUEL GAUGE	1	
12	34360-92E00	.ADAPTER, FUEL GAUGE	1	
13	09471-12103	.BULB (12V,3W,T6.5)	1	

DF60A_E01_018_501C
OPT:METER

FIG.501C

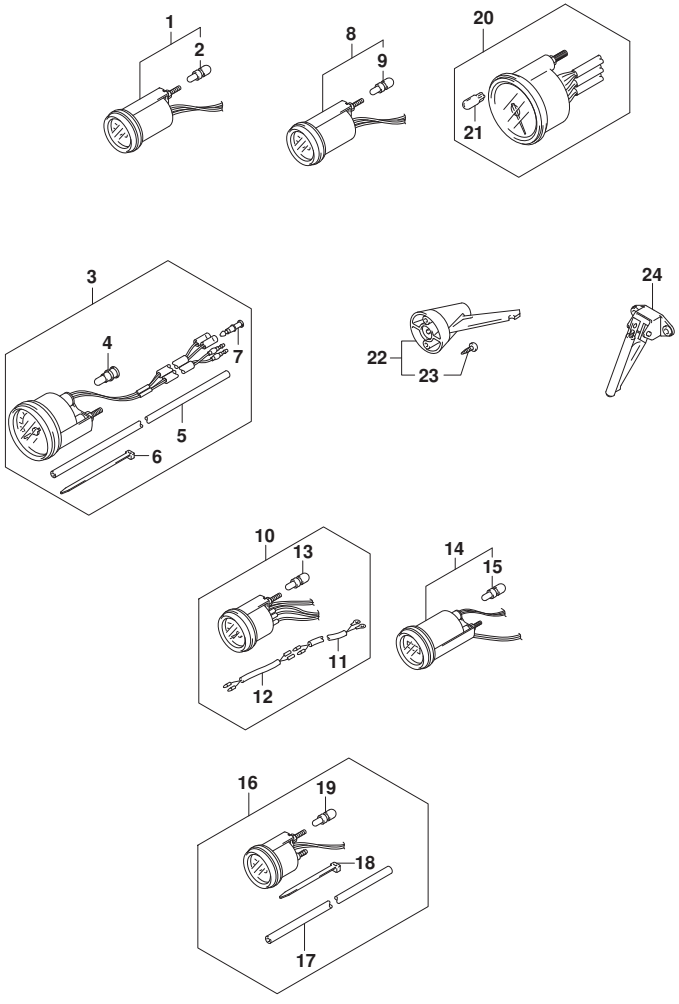

FIG.501C (2-E-4) OPT:METER (DF60AQH)(DF60ATH)(DF50AVTH)(DF60AVTH)

REF NO.	PART NO.	DESCRIPTION	Q'TY	REMARKS
14-1	34500-93J00	METER ASSY, HOUR	1	BLACK
14-2	34500-93J11	METER ASSY, HOUR	1	WHITE
15	09471-12103	.BULB (12V,3W,T6.5)	1	
16-1	34650-93J20	GAUGE ASSY, WATER PRESSURE	1	15PSI BLACK
16-2	34650-93J31	GAUGE ASSY, WATER PRESSURE	1	15PSI WHITE
17	34191-92E00	.TUBE	1	
18	09407-14407	.CLAMP (L:145)	2	
19	09471-12103	.BULB (12V,3W,T6.5)	1	
20-1	34200-93J00	TACHOMETER ASSY, WITH MONITOR	1	BLACK
20-2	34200-93J12	TACHOMETER ASSY, WITH MONITOR	1	WHITE
21	09471-12077	.BULB (12V,1.7W)	1	
22	34190-95500	SENDER ASSY, SPEEDOMETER	1	
23	03112-0630B	.SCREW	2	
24	34190-87D00	SENDER, SPEEDOMETER	1	

DF60AQH E01
DF60AQH E40
DF60ATH E01
DF60ATH E40
DF50AVTH E01
DF60AVTH E01
DF60AVTH E40

DF60A_E01_018_501C
OPT:METER

FIG.507A

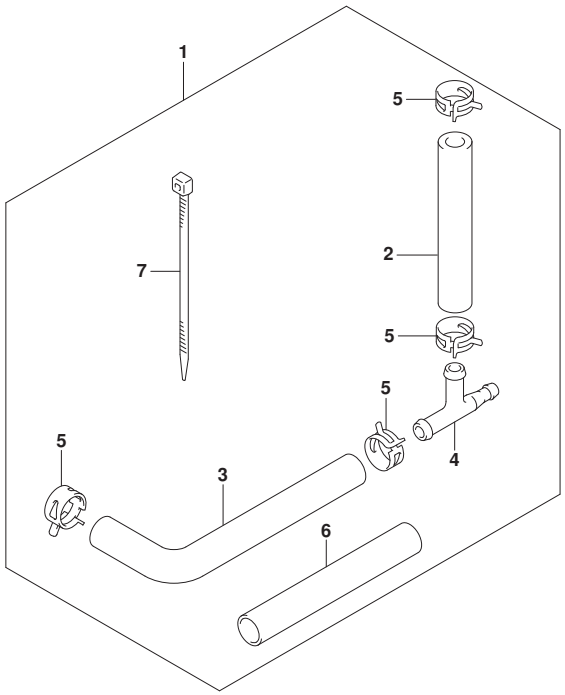

FIG.507A (2-E-5) OPT:WATER PRESSURE GAUGE SUB KIT

REF NO.	PART NO.	DESCRIPTION	Q'TY	REMARKS
1	34660-90J02	WATER PRESSURE GAUGE SUB KIT	1	
2	09352-50903-600	.HOSE (5X9X600)	1	L:600->160
3	09352-50903-600	.HOSE (5X9X600)	1	L:600->210
4	09367-06006	.3 WAY	1	
5	09401-08413	.CLIP	4	
6	18498-99EA0	.PROTECTOR (L:80)	1	
7	09407-25402	.CLAMP (L:250)	1	

DF60A_E01_018_507A
OPT:WATER PRESSURE GAUGE SUB KIT

FIG.508A

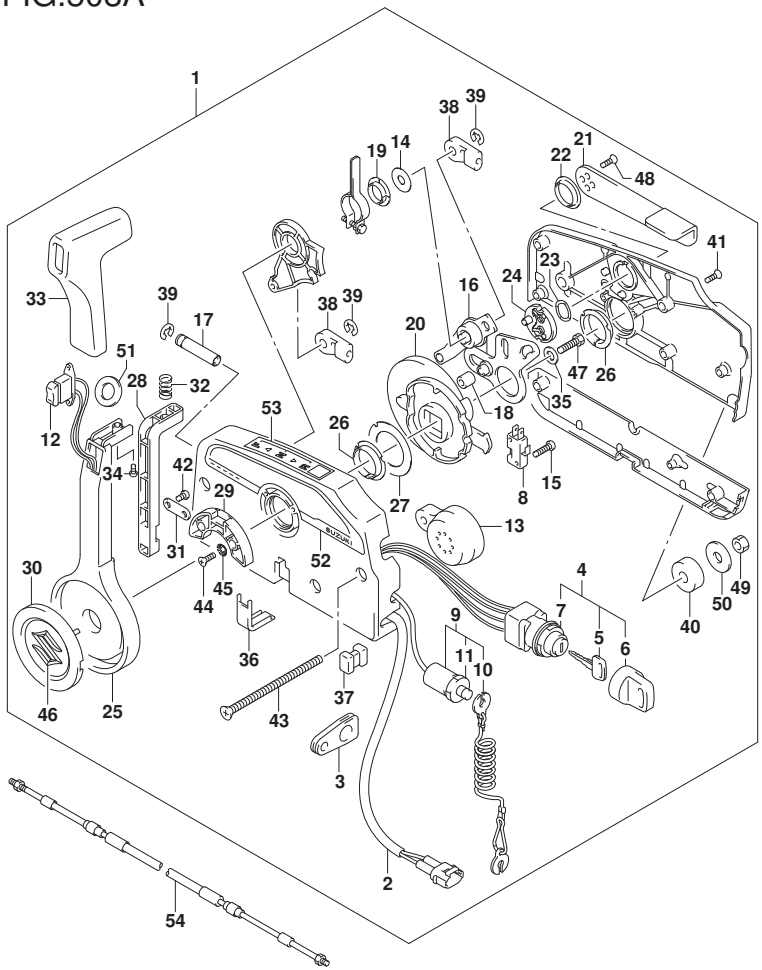

FIG.508A (2-E-6) OPT:REMOTE CONTROL (DF40A)(DF40AST)(DF50A)(DF60A)(DF50AVT

REF NO.	PART NO.	DESCRIPTION	Q'TY	REMARKS
1	67200-93J51	REMOTE CONTROL ASSY	1	
2	36646-93J01	.WIRE ASSY, PTT SW ADAPTER	1	
3	36628-92E00	.GROMMET, WIRE HARNESS	1	
4	37110-93J11	.SWITCH ASSY, IGNITION	1	
5-1	37141-99E00	..KEY (931)	2	
5-2	37141-99E10	..KEY (932)	2	
5-3	37141-99E20	..KEY (933)	2	
5-4	37141-99E30	..KEY (934)	2	
5-5	37141-99E40	..KEY (935)	2	
5-6	37141-99E50	..KEY (936)	2	
5-7	37141-99E60	..KEY (937)	2	
5-8	37141-99E70	..KEY (938)	2	
5-9	37141-99E80	..KEY (939)	2	
5-10	37141-99E90	..KEY (940)	2	
5-11	37141-99EA0	..KEY (941)	2	
5-12	37141-99EB0	..KEY (942)	2	
6	37143-99E00	..CAP, KEY	2	
7	37149-93J00	..CAP CYLINDER BODY	1	
8	37721-93J91	.SWITCH, NEUTRAL	1	
9	37820-93J04	.SWITCH ASSY, EMERGENCY	1	
10	37823-92E01	..PLATE	1	
11	37826-92J00	..NUT	1	
12	37850-90J06	.SWITCH ASSY, PTT	1	

DF60A_E01_018_508A
OPT:REMOTE CONTROL

FIG.508A

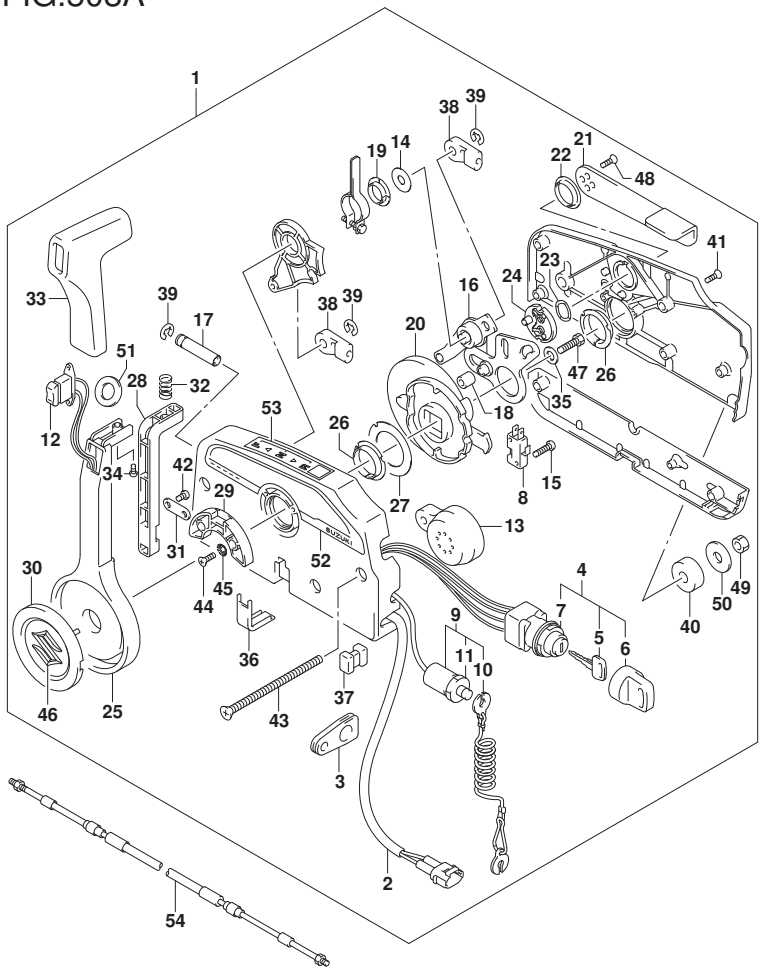

FIG.508A (2-E-7) OPT:REMOTE CONTROL (DF40A)(DF40AST)(DF50A)(DF60A)(DF50AVT

REF NO.	PART NO.	DESCRIPTION	Q'TY	REMARKS
13	38500-93J90	.BUZZER	1	
14	67212-95600	.WASHER	1	
15	67296-92E11	.SCREW, NEUTRAL SW	2	
16	67220-95630	.PLATE ASSY	1	
17	67223-99E10	.KNOB, BRAKE ADJ	1	
18	67229-95600	.ROLLER	1	
19	67232-95600	.BUSH	1	
20	67238-87D00	.GEAR, DRIVE	1	
21	67241-99E10	.LEVER, FREE THROTTLE	1	
22	67243-95600	.BUSH	1	
23	67244-95600	.WASHER, WAVE	1	
24	67245-95600	.DRUM, FREE THROTTLE	1	
25	67251-99E20	.LEVER, HANDLE	1	
26	67252-95600	.BUSH	2	
27	67253-95600	.WASHER	1	
28	67255-99E10	.ARM, LOCK	1	
29	67256-95600	.HOLDER, NEUT LOCK	1	
30	67257-99E10	.CAP, LEVER	1	
31	67258-99E00	.BRACKET, LOCK ARM	1	
32	67259-87D00	.SPRING, NEUTRAL ARM	1	
33	67261-99E10	.GRIP	1	
34	67296-94310	.SCREW	1	
35	67264-95600	.WASHER	1	

FIG.508A

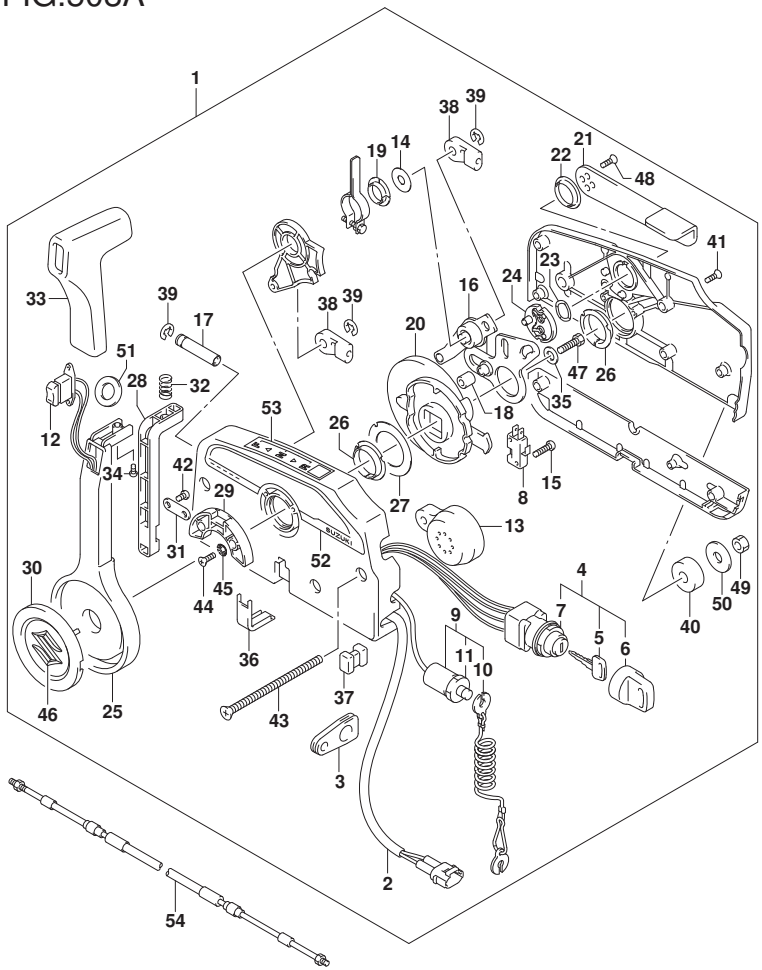

FIG.508A (2-E-8) OPT:REMOTE CONTROL (DF40A)(DF40AST)(DF50A)(DF60A)(DF50AVT

REF NO.	PART NO.	DESCRIPTION	Q'TY	REMARKS
36	67267-93J00	.COVER, WIRE	1	
37	67273-95600	.SPACER	1	
38	67275-95600	.END, CABLE	2	
39	67292-94300	.E RING	3	
40	67294-95600	.SPACER	3	
41	67296-90J10	.SCREW	5	
42	67296-94300	.SCREW	2	
43	67296-95600	.SCREW	3	
44	67296-95610	.SCREW	2	
45	67297-95600	.WASHER	2	
46	77811-54GB0-0PG	.EMBLEM, REAR MARK S (CHROME)	1	
47	09100-08232	.BOLT (8X30)	1	
48	09126-05003	.SCREW (5X12)	2	
49	09140-06020	.NUT	3	
50	09160-06104	.WASHER (6.5X24X2)	3	
51	37859-90J00	.SPACER	1	
52	67282-94L00	.DECAL, REMOCON SIDE	1	
53	67284-94L00	.MARK, HANDLE LEVER	1	
54-1	67320-93J00	CABLE, REMOCON 8F (2.4M)	1	
54-2	67320-93J10	CABLE, REMOCON 10F (3.1M)	1	
54-3	67320-93J20	CABLE, REMOCON 12F (3.7M)	1	
54-4	67320-93J30	CABLE, REMOCON 14F (4.2M)	1	
54-5	67320-93J40	CABLE, REMOCON 16F (4.8M)	1	

FIG.508A

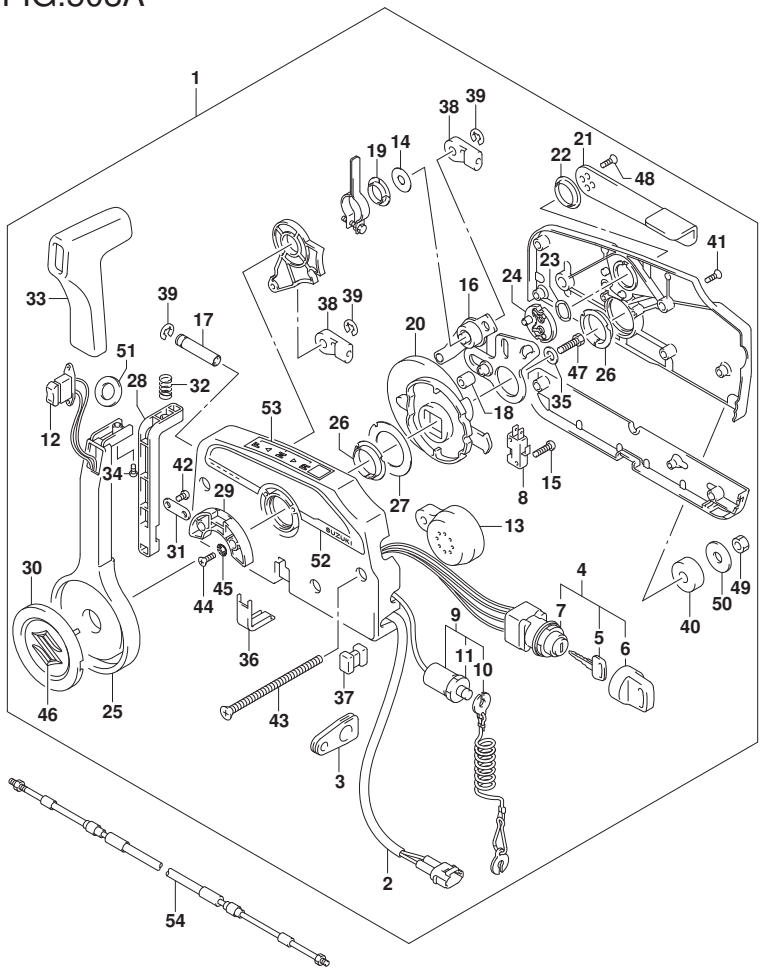

FIG.508A (2-E-9) OPT:REMOTE CONTROL (DF40A)(DF40AST)(DF50A)(DF60A)(DF50AVT

REF NO.	PART NO.	DESCRIPTION	Q'TY	REMARKS
54-6	67320-93J50	CABLE, REMOCON 18F (5.4M)	1	
54-7	67320-93J60	CABLE, REMOCON 20F (6.1M)	1	
54-8	67320-93J70	CABLE, REMOCON 22F (6.7M)	1	
54-9	67320-93J80	CABLE, REMOCON 24F (7.3M)	1	

DF40A E01
DF40AST E34
DF50A E01
DF60A E01
DF60A E40
DF50AVT E01
DF60AVT E01
DF60AVT E40

DF60A_E01_018_508A
OPT:REMOTE CONTROL

FIG.515A

FIG.515A (2-E-10) OPT:REMOCON CABLE (DF40AQH)(DF40ATH)(DF50ATH)

REF NO.	PART NO.	DESCRIPTION	Q'TY	REMARKS
1-1	67320-93J00	CABLE, REMOCON 8F (2.4M)	2	
1-2	67320-93J10	CABLE, REMOCON 10F (3.1M)	2	
1-3	67320-93J20	CABLE, REMOCON 12F (3.7M)	2	
1-4	67320-93J30	CABLE, REMOCON 14F (4.2M)	2	
1-5	67320-93J40	CABLE, REMOCON 16F (4.8M)	2	
1-6	67320-93J50	CABLE, REMOCON 18F (5.4M)	2	
1-7	67320-93J60	CABLE, REMOCON 20F (6.1M)	2	
1-8	67320-93J70	CABLE, REMOCON 22F (6.7M)	2	
1-9	67320-93J80	CABLE, REMOCON 24F (7.3M)	2	

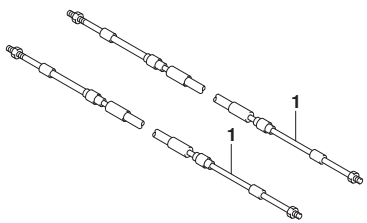

DF40AQH E01
DF40ATH E01
DF50ATH E01

FIG.515B

FIG.515B (2-E-11) OPT:REMOCON CABLE (DF60AQH)(DF60ATH)(DF50AVTH)(DF60AVT

REF NO.	PART NO.	DESCRIPTION	Q'TY	REMARKS
1-1	67320-93J00	CABLE, REMOCON 8F (2.4M)	2	
1-2	67320-93J10	CABLE, REMOCON 10F (3.1M)	2	
1-3	67320-93J20	CABLE, REMOCON 12F (3.7M)	2	
1-4	67320-93J30	CABLE, REMOCON 14F (4.2M)	2	
1-5	67320-93J40	CABLE, REMOCON 16F (4.8M)	2	
1-6	67320-93J50	CABLE, REMOCON 18F (5.4M)	2	
1-7	67320-93J60	CABLE, REMOCON 20F (6.1M)	2	
1-8	67320-93J70	CABLE, REMOCON 22F (6.7M)	2	
1-9	67320-93J80	CABLE, REMOCON 24F (7.3M)	2	

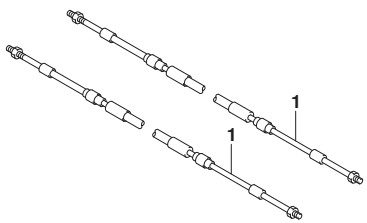

DF60AQH E01
DF60AQH E40
DF60ATH E01
DF60ATH E40
DF50AVTH E01
DF60AVTH E01
DF60AVTH E40

DF60A_E01_018_515B
OPT:REMOCON CABLE

FIG.521A

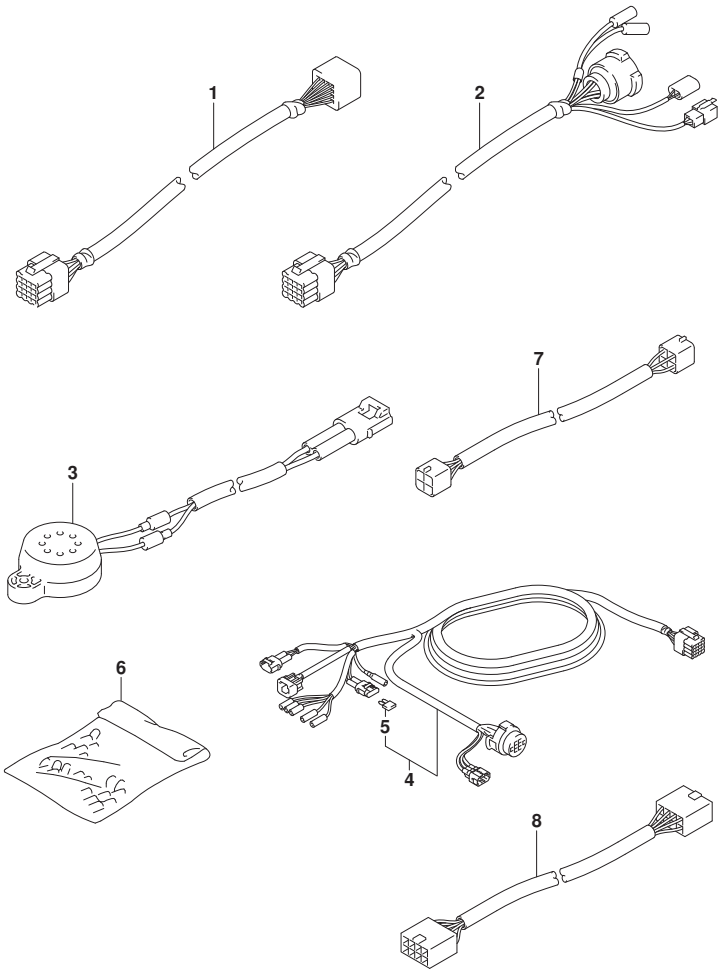

FIG.521A (2-E-12) OPT:HARNESS (DF40A)(DF40AST)(DF50A)(DF60A)(DF50AVT)(DF60A

REF NO.	PART NO.	DESCRIPTION	Q'TY	REMARKS
1-1	36620-93J10	WIRE ASSY, REMOCON EXTENSION	1	L:2000
1-2	36620-93J40	WIRE ASSY, REMOCON EXTENSION	1	L:3000
2	36620-93J30	WIRE ASSY, REMOCON ADAPTER	1	L:2000
3	38500-93J00	BUZZER ASSY, WARNING	1	
4-1	36620-93J02	WIRE ASSY, REMOTE CONTROL	1	L:5000
4-2	36620-93J52	WIRE ASSY, REMOTE CONTROL	1	L:3500
4-3	36620-93J62	WIRE ASSY, REMOTE CONTROL	1	L:6500
5	09481-10501	.FUSE (10A)	1	
6	36990-87D00	TERMINAL & SLEEVE SET	1	
7	36682-92E00	WIRE, MONITOR GAUGE EXTENSION	1	
8	36667-96L20	WIRE, GAUGE EXT	1	

DF40A E01
DF40AST E34
DF50A E01
DF60A E01
DF60A E40
DF50AVT E01
DF60AVT E01
DF60AVT E40

DF60A_E01_018_521A
OPT:HARNESS

FIG.521B

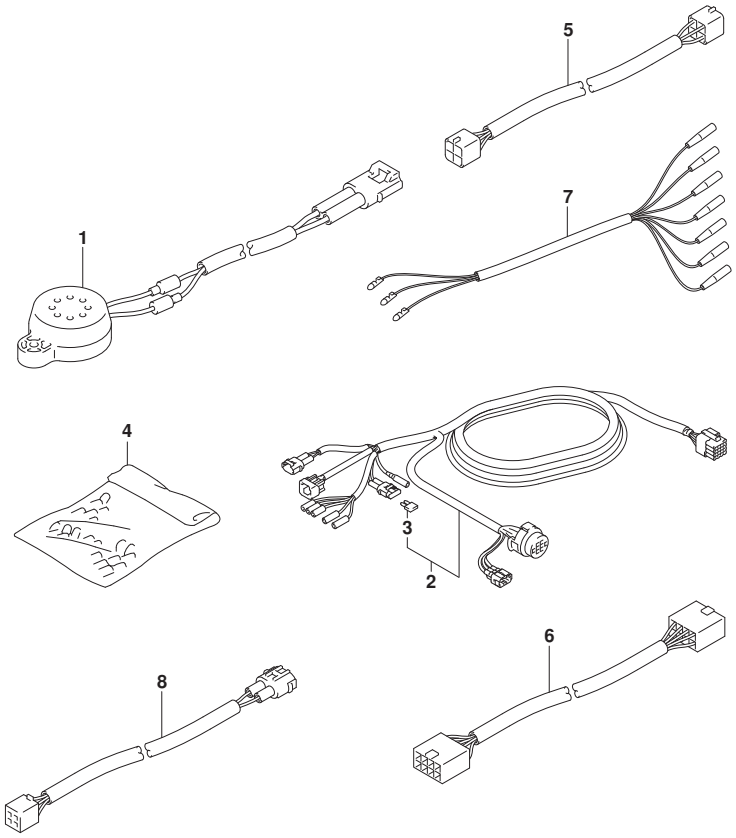

FIG.521B (2-E-13) OPT:HARNESS (DF40AQH)(DF40ATH)(DF50ATH)(DF60AQH)

REF NO.	PART NO.	DESCRIPTION	Q'TY	REMARKS
1	38500-93J00	BUZZER ASSY, WARNING	1	
2-1	36620-93J02	WIRE ASSY, REMOTE CONTROL	1	L:5000
2-2	36620-93J52	WIRE ASSY, REMOTE CONTROL	1	L:3500
2-3	36620-93J62	WIRE ASSY, REMOTE CONTROL	1	L:6500
3	09481-10501	.FUSE (10A)	1	
4	36990-87D00	TERMINAL & SLEEVE SET	1	
5	36682-92E00	WIRE, MONITOR GAUGE EXTENSION	2	
6	36667-96L20	WIRE, GAUGE EXT	1	
7	36630-92E00	WIRE ASSY, INSTRUMENT	1	
8	36660-94480	WIRE, SENDER EXT (L:2000)	1	

DF40AQH E01
DF40ATH E01
DF50ATH E01
DF60AQH E01
DF60AQH E40

DF60A_E01_018_521B
OPT:HARNESS

FIG.521C

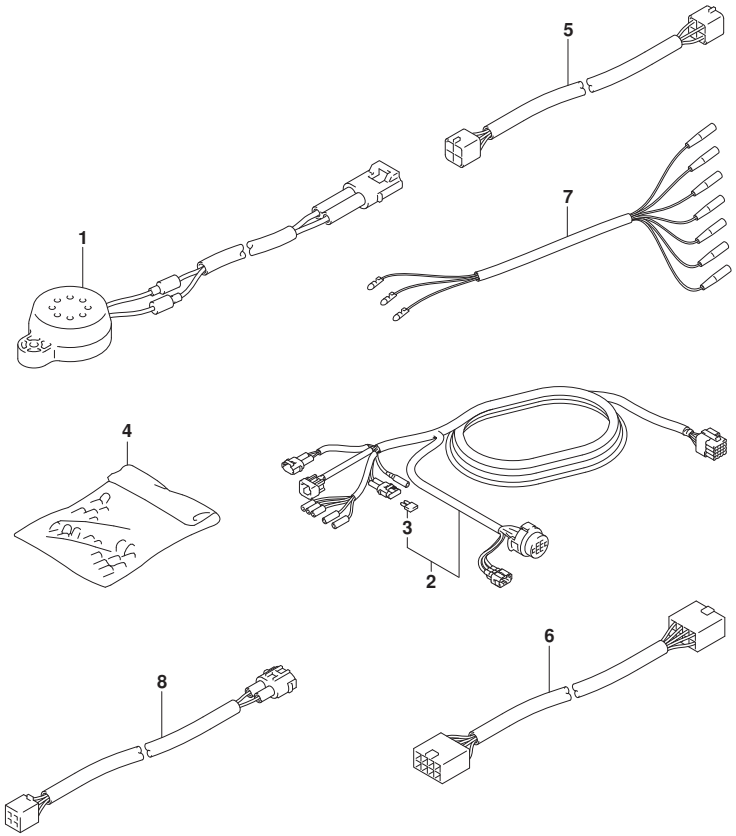

FIG.521C (2-E-14) OPT:HARNESS (DF60ATH)(DF50AVTH)(DF60AVTH)

REF NO.	PART NO.	DESCRIPTION	Q'TY	REMARKS
1	38500-93J00	BUZZER ASSY, WARNING	1	
2-1	36620-93J02	WIRE ASSY, REMOTE CONTROL	1	L:5000
2-2	36620-93J52	WIRE ASSY, REMOTE CONTROL	1	L:3500
2-3	36620-93J62	WIRE ASSY, REMOTE CONTROL	1	L:6500
3	09481-10501	.FUSE (10A)	1	
4	36990-87D00	TERMINAL & SLEEVE SET	1	
5	36682-92E00	WIRE, MONITOR GAUGE EXTENSION	2	
6	36667-96L20	WIRE, GAUGE EXT	1	
7	36630-92E00	WIRE ASSY, INSTRUMENT	1	
8	36660-94480	WIRE, SENDER EXT (L:2000)	1	

DF60ATH E01
DF60ATH E40
DF50AVTH E01
DF60AVTH E01
DF60AVTH E40

FIG.530A

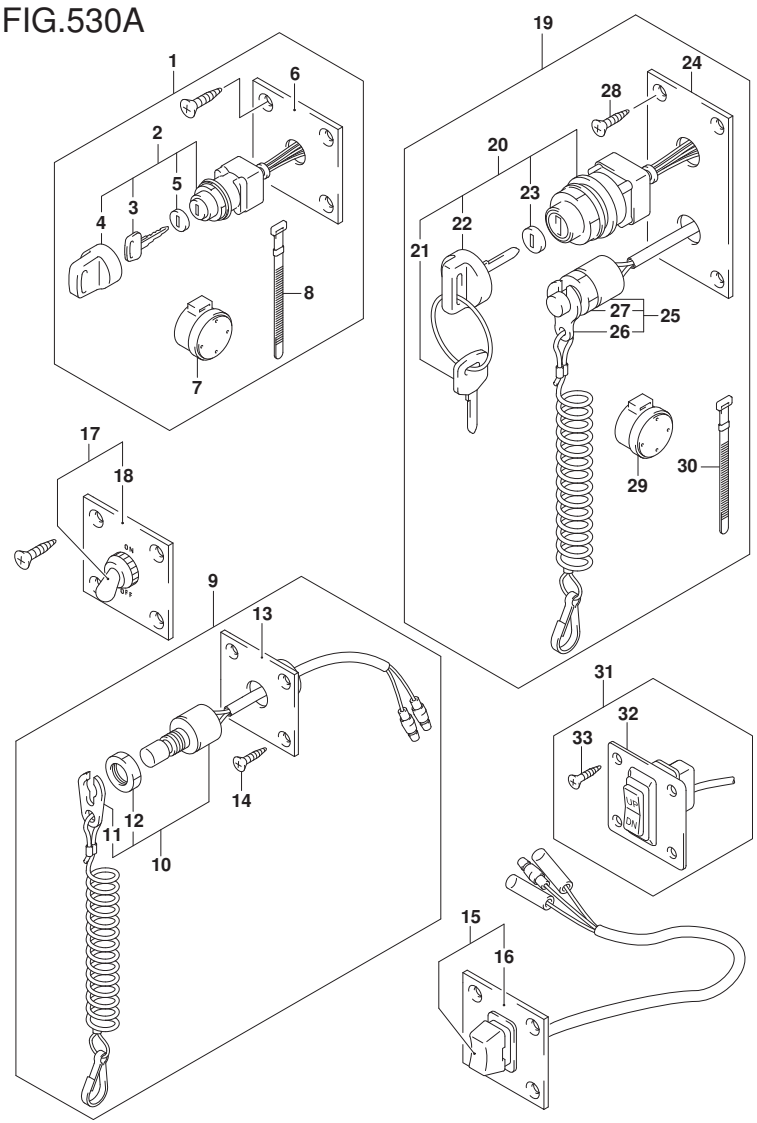

FIG.530A (2-E-15) OPT:SWITCH (DF40A)(DF40AST)(DF50A)(DF60A)(DF50AVT)(DF60AVT

REF NO.	PART NO.	DESCRIPTION	Q'TY	REMARKS
1	37100-96J00	PANEL ASSY, IGNITION SW	1	
2	37110-93J01	.SWITCH ASSY, IGNITION	1	
3-1	37141-99E00	..KEY (931)	2	
3-2	37141-99E10	..KEY (932)	2	
3-3	37141-99E20	..KEY (933)	2	
3-4	37141-99E30	..KEY (934)	2	
3-5	37141-99E40	..KEY (935)	2	
3-6	37141-99E50	..KEY (936)	2	
3-7	37141-99E60	..KEY (937)	2	
3-8	37141-99E70	..KEY (938)	2	
3-9	37141-99E80	..KEY (939)	2	
3-10	37141-99E90	..KEY (940)	2	
3-11	37141-99EA0	..KEY (941)	2	
3-12	37141-99EB0	..KEY (942)	2	
4	37143-99E00	..CAP, KEY	1	
5	37149-93J00	..CAP, CYLINDER BODY	1	
6	37139-99E00	.PANEL, IGNITION SW	1	
7	38500-93J90	.BUZZER ASSY, WARNING	1	
8	09407-08401	.CLAMP (L:80)	1	
9	37803-93J05	PANEL ASSY, EMERGENCY SW	1	
10	37820-93J10	.SWITCH ASSY, EMERGENCY	1	
11	37823-92E01	..PLATE, LOCK	1	
12	37826-92J10	..NUT	1	

DF60A_E01_018_530A
OPT:SWITCH

FIG.530A

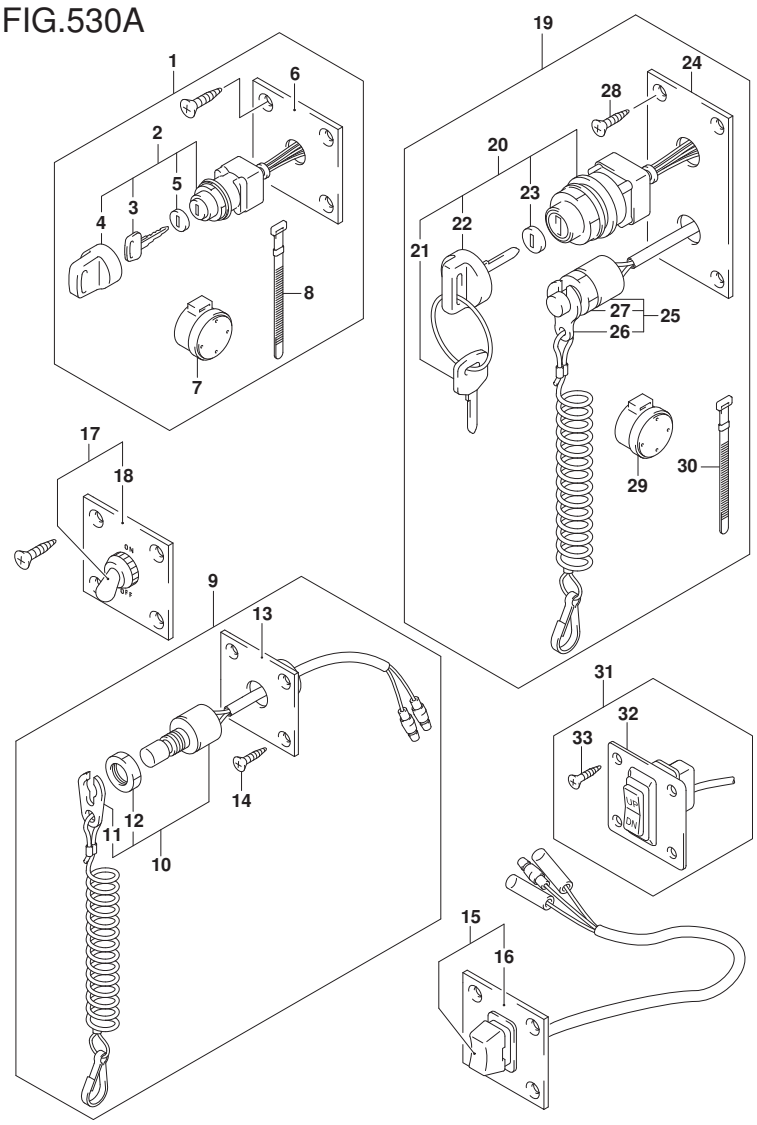

FIG.530A (2-F-2) OPT:SWITCH (DF40A)(DF40AST)(DF50A)(DF60A)(DF50AVT)(DF60AVT)

REF NO.	PART NO.	DESCRIPTION	Q'TY	REMARKS
13	37825-99E10	.PANEL, EMERGENCY SW	1	
14	03122-05165	.SCREW	4	
15	37805-93J00	PANEL ASSY, PTT SW	1	
16	37855-99E00	.PANEL, PTT SW	1	
17	37210-93J00	PANEL ASSY, LIGHTING SW	1	
18	37212-93J00	.PANEL, LIGHTING SW	1	
19	37100-96J25	PANEL ASSY, ENGINE SW	1	
20	37110-93J01	.SWITCH ASSY, IGNITION	1	
21-1	37141-99E00	..KEY (931)	2	
21-2	37141-99E10	..KEY (932)	2	
21-3	37141-99E20	..KEY (933)	2	
21-4	37141-99E30	..KEY (934)	2	
21-5	37141-99E40	..KEY (935)	2	
21-6	37141-99E50	..KEY (936)	2	
21-7	37141-99E60	..KEY (937)	2	
21-8	37141-99E70	..KEY (938)	2	
21-9	37141-99E80	..KEY (939)	2	
21-10	37141-99E90	..KEY (940)	2	
21-11	37141-99EA0	..KEY (941)	2	
21-12	37141-99EB0	..KEY (942)	2	
22	37143-99E00	..CAP, KEY	1	
23	37149-93J00	..CAP, CYLINDER BODY	1	
24	37139-99E40	.PANEL, IGNITION SWITCH	1	

DF60A_E01_018_530A
OPT:SWITCH

FIG.530A

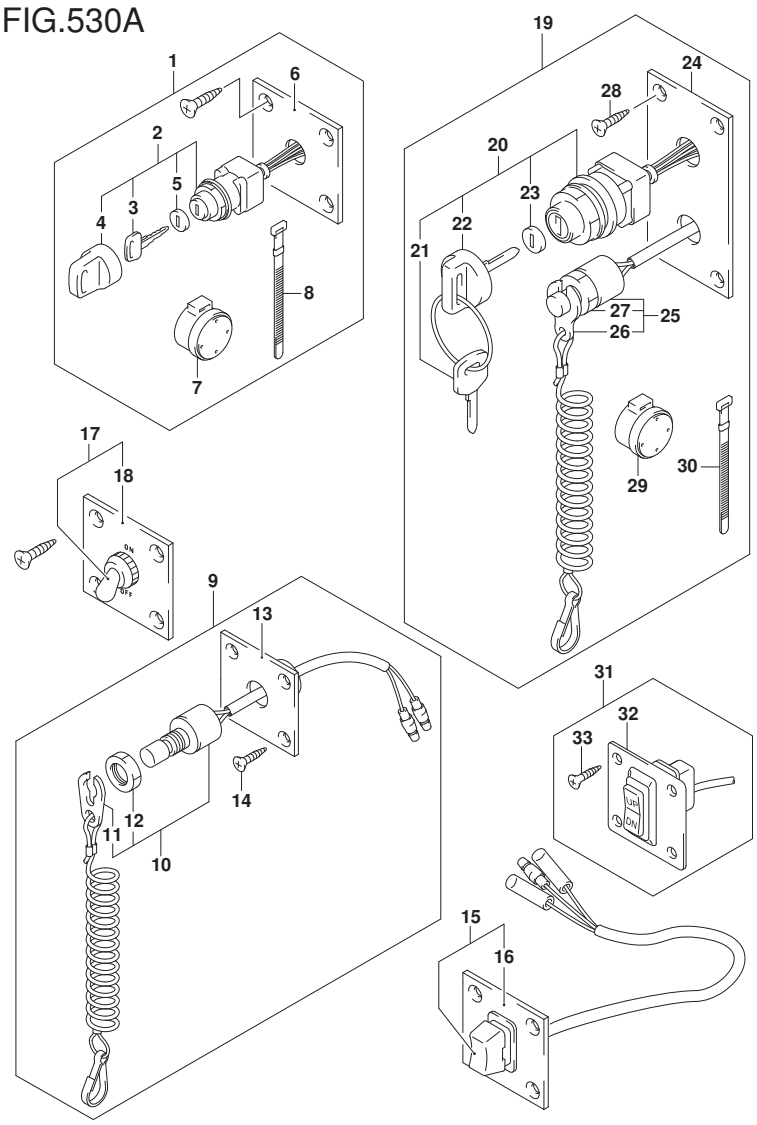

FIG.530A (2-F-3) OPT:SWITCH (DF40A)(DF40AST)(DF50A)(DF60A)(DF50AVT)(DF60AVT)

REF NO.	PART NO.	DESCRIPTION	Q'TY	REMARKS
25	37820-93J10	.SWITCH ASSY, EMERGENCY	1	
26	37823-92E01	..PLATE ASSY, EMERGENCY	1	
27	37826-92J10	..NUT	1	
28	03121-0516A	.SCREW	4	
29	38500-93J90	.BUZZER ASSY, WARNING	1	
30	09407-08401	.CLAMP (L:80)	1	
31	37860-87L00	PANEL ASSY, TROLLING CONTROL	1	
32	37862-87L00	.PANEL	1	
33	09131-05004	.SCREW (5X16)	4	

DF40A E01
DF40AST E34
DF50A E01
DF60A E01
DF60A E40
DF50AVT E01
DF60AVT E01
DF60AVT E40

DF60A_E01_018_530A
OPT:SWITCH

FIG.544A

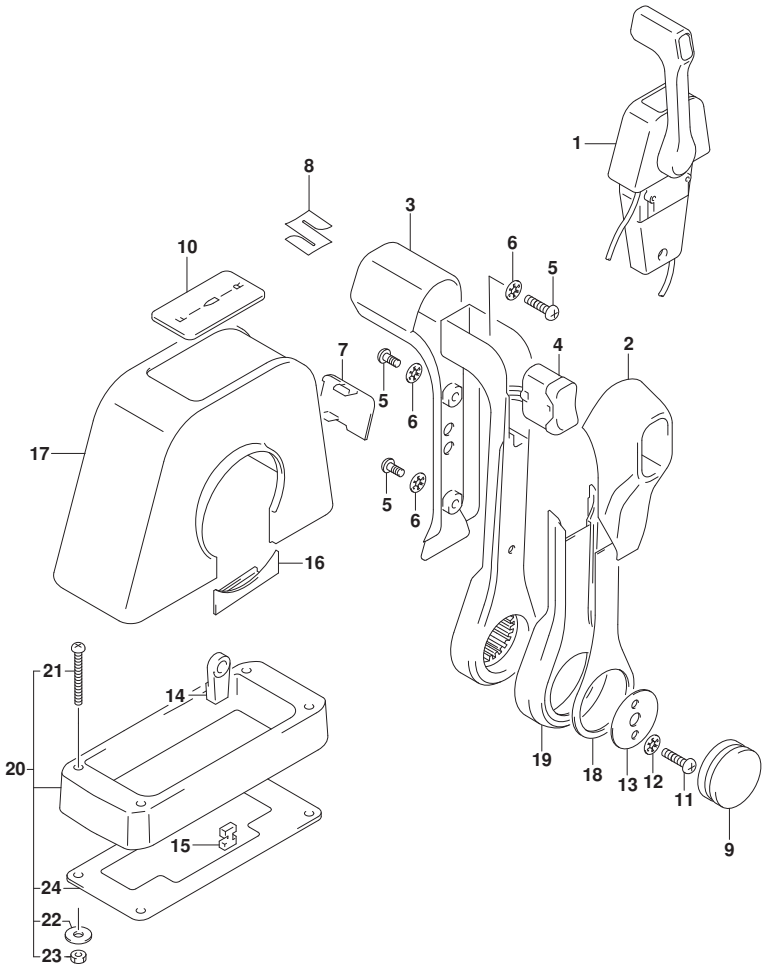

FIG.544A (2-F-4) OPT:REMOTE CONTROL ASSY SINGLE (1)

REF NO.	PART NO.	DESCRIPTION	Q'TY	REMARKS
1	67200-88L00	REMOTE CONTROL ASSY, SINGLE	1	
2	67261-88L10	.GRIP, REMOCON NO.2	1	
3	67261-88L00	.GRIP, REMOCON NO.1	1	
4	37850-88L00	.SWITCH ASSY, PTT	1	
5	67296-88L00	.SCREW	3	
6	67288-92E20	.WASHER	3	
7	67212-88L00	.COVER, PLUG (SINGLE)	1	
8	68111-88L00	.EMBLEM, MARK (S)	1	
9	67257-88L00	.CAP, LEVER	1	
10	67281-88L00	.DECAL (SINGLE)	1	
11	67296-92E60	.SCREW	2	
12	67288-92E60	.WASHER	2	
13	67253-92E00	.WASHER	1	
14	67275-95600	.END, CABLE	2	
15	67273-95600	.SPACER	1	
16	67271-88L10	.COVER, REMOCON LEVER LOWER	1	
17	67211-88L00	.COVER (SINGLE)	1	
18	67264-88L00	.COVER, LEVER DESIGN	1	
19	67264-88L10	.COVER, LEVER PLATING	1	
20	67500-88L00	KIT, REMOCON SPACER SINGLE	1	
21	09125-05135	.SCREW (5X65)	4	
22	09160-05029	.WASHER (5.5X12X0.8)	4	
23	09140-05005	.NUT	4	
24	67273-88L00	.GROMMET, R/CON SINGLE	1	

DF60A_E01_018_544A
OPT:REMOTE CONTROL ASSY SINGLE (1)

FIG.545A

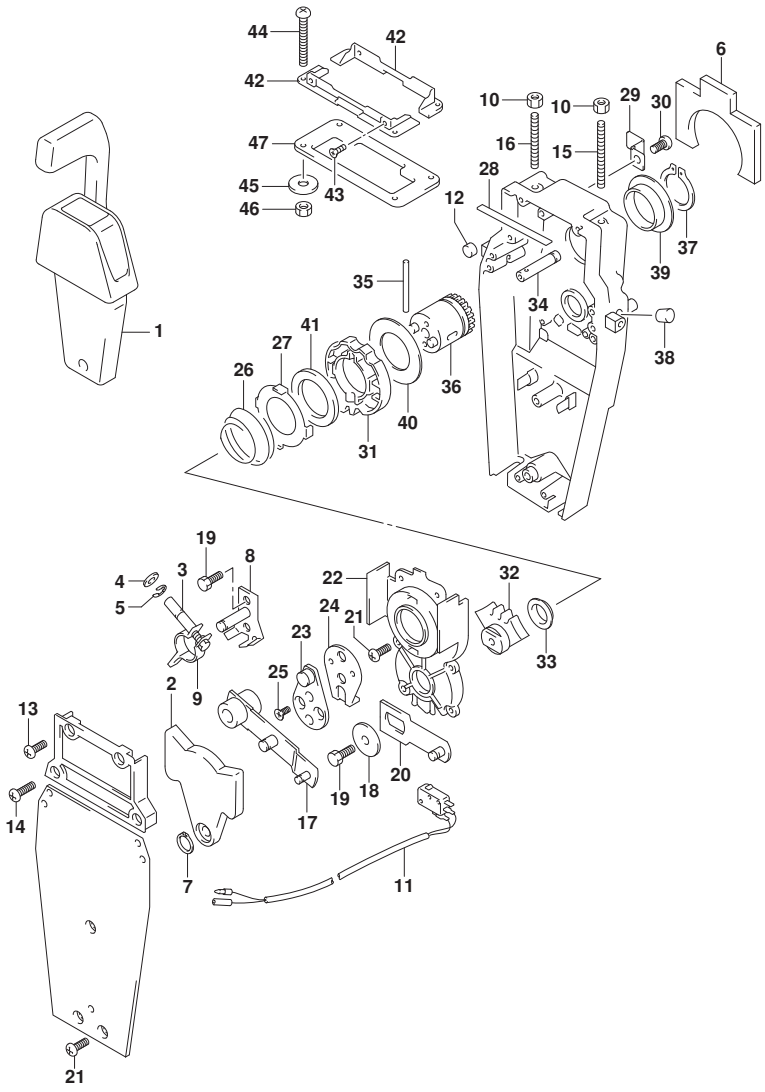

DF60A_E01_018_545A
OPT:REMOTE CONTROL ASSY SINGLE (2)

FIG.545A (2-F-5) OPT:REMOTE CONTROL ASSY SINGLE (2)

REF NO.	PART NO.	DESCRIPTION	Q'TY	REMARKS
1	67200-88L00	REMOTE CONTROL ASSY	1	
2	67222-92E00	.DUAL PLATE	1	
3	67223-92E00	.BRAKE ADJUST	1	
4	67288-92E00	.WASHER	1	
5	67292-94300	.E RING	4	
6	67272-88L00	.GOM SEAL, WATERPROOF	1	
7	67291-92E00	.SNAP RING	1	
8	67221-92E00	.SHIFT ASSY	1	
9	67224-92E00	.BRAKE ARM ASSY	1	
10	09140-06020	.NUT	2	
11	37721-88L00	.SWITCH ASSY, NEUTRAL	1	
12	67236-92E00	.ROLLER	1	
13	67296-88D10	.SCREW (5X16)	2	
14	67296-92E20	.SCREW	2	
15	67226-92E00	.BOLT, STOPPER FRONT	1	
16	67226-92E10	.BOLT, STOPPER REAR	1	
17	67240-92E00	.ARM ASSY, THROTTLE	1	
18	67228-92E00	.WASHER	1	
19	67286-92E00	.BOLT	3	
20	67230-88L00	.ARM ASSY, SHIFT	1	
21	09125-05042	.SCREW (5X10)	10	
22	67234-88L00	.CASE, GEAR	1	
23	67245-92E00	.LEVER ASSY, THROTTLE	1	
24	67227-92E00	.STOPPER	1	
25	09126-06006	.SCREW (6X20)	2	
26	67233-92E00	.SPRING	1	
27	67235-92E00	.PLATE, SHIFT LOCK	1	
28	67237-92E01	.SPRING	5	
29	67269-92E00	.BRACKET	1	
30	67296-88D10	.SCREW	1	
31	67238-88L00	.GEAR, DRIVE	1	
32	67231-88L00	.GEAR, SHIFT	1	
33	67232-88L00	.BUSH, SHIFT GEAR	1	
34	67241-88L00	.ROD, FREE ACCEL	1	

FIG.545A

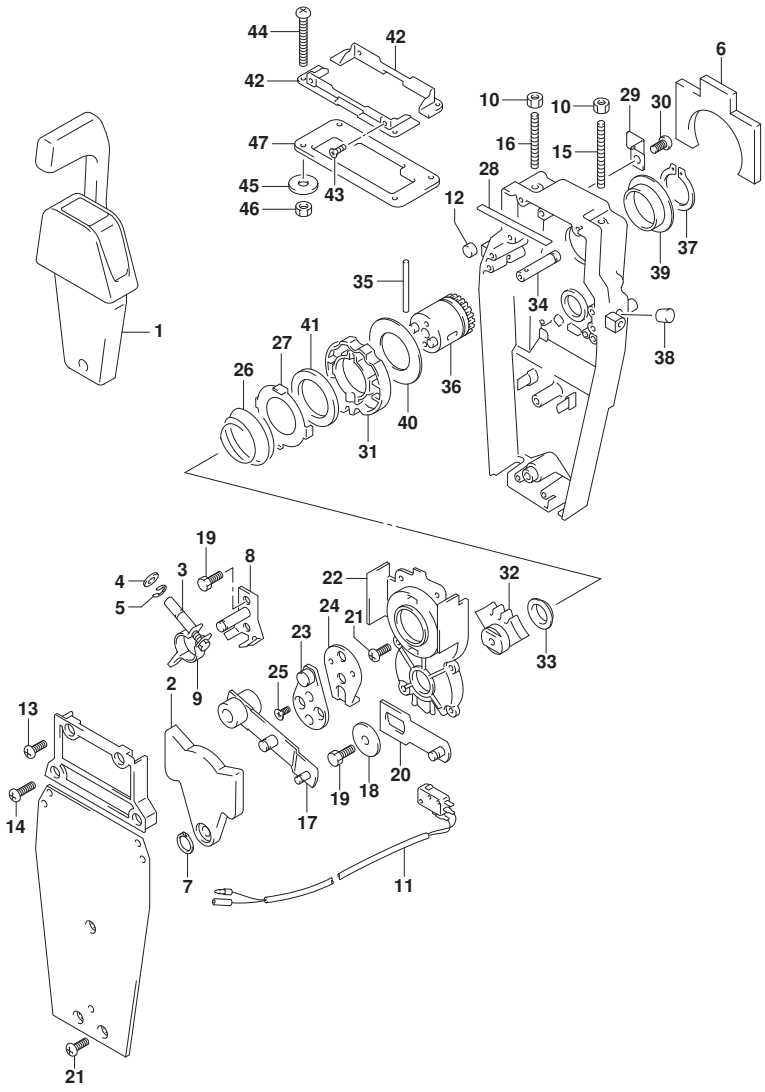

FIG.545A (2-F-6) OPT:REMOTE CONTROL ASSY SINGLE (2)

REF NO.	PART NO.	DESCRIPTION	Q'TY	REMARKS
35	67239-92E00	.PIN	1	
36	67246-88L00	.SHIFT, REMOCON DRIVE	1	
37	67291-92E10	.SNAP RING	1	
38	67243-92E00	.CAP, HOLE	1	
39	67252-88L00	.BUSH, REMOCON DRIVE SHAFT	1	
40	67253-88L00	.WASHER, REMOCON DRIVE SHAFT	1	
41	67239-92E10	.PLATE, SHIFT PIN	1	
42	67274-88L00	.FLANGE, COVER BASE (SINGLE)	2	
43	67296-95610	.SCREW	4	
44	67296-92E30	.SCREW	4	
45	09160-05024	.WASHER (5.5X16X1.5)	4	
46	67287-92E00	.NUT	4	
47	67273-88L00	.GROMMET, REMOCON (SINGLE)	1	

DF60A_E01_018_545A
OPT:REMOTE CONTROL ASSY SINGLE (2)

FIG.570A

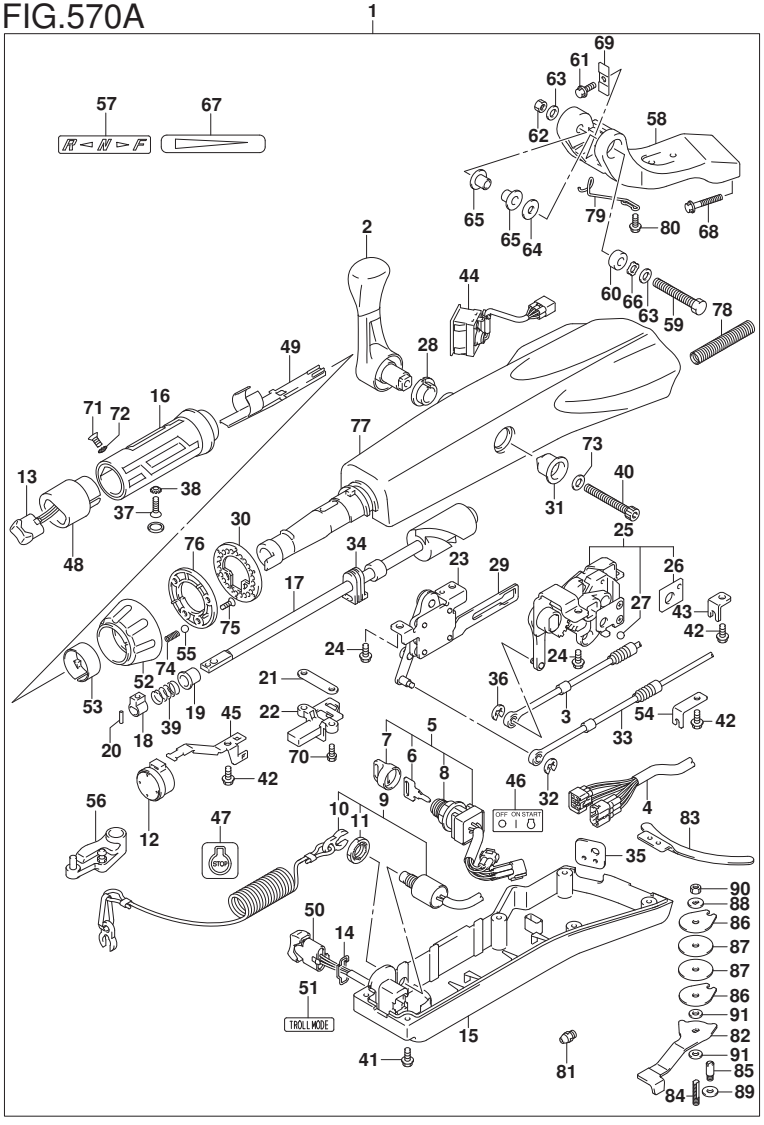

FIG.570A (2-F-7) OPT:TILLER HANDLE (DF40A)(DF50A)

REF NO.	PART NO.	DESCRIPTION	Q'TY	REMARKS
1	63002-88L22-YAY	KIT TILLER HANDLE (BLACK)	1	
2	21110-88L00	.LEVER, SHIFT	1	
3	23230-88L00	.CABLE, SHIFT	1	
4	36620-88L10	.WIRE ASSY, HANDLE	1	
5	37110-87L01	.SWITCH ASSY, IGNITION	1	
6-1	37141-99E00	..KEY (931)	1	
6-2	37141-99E10	..KEY (932)	1	
6-3	37141-99E20	..KEY (933)	1	
6-4	37141-99E30	..KEY (934)	1	
6-5	37141-99E40	..KEY (935)	1	
6-6	37141-99E50	..KEY (936)	1	
6-7	37141-99E60	..KEY (937)	1	
6-8	37141-99E70	..KEY (938)	1	
6-9	37141-99E80	..KEY (939)	1	
6-10	37141-99E90	..KEY (940)	1	
6-11	37141-99EA0	..KEY (941)	1	
6-12	37141-99EB0	..KEY (942)	1	
7	37143-99E00	..CAP, KEY	1	
8	37149-93J00	..CAP, CYLINDER BODY	1	
9	37820-87L01	.SWITCH ASSY, EMERGENCY	1	
10	37823-92E01	..PLATE, LOCK	1	
11	37826-92J00	..NUT	1	
12	38500-93J90	.BUZZER	1	
13	37850-87L01	.SWITCH ASSY, PTT	1	
14	37852-87J00	.PLATE, TRIM SWITCH	1	
15	63121-88L00	.COVER, UNDER	1	
16	63210-88L00	.GRIP, HANDLE	1	
17	63221-88L00	.SHAFT, THROTTLE	1	
18	63223-92D00	.STOPPER, HANDLE ROD	1	

DF60A_E01_018_570A
OPT:TILLER HANDLE

FIG.570A

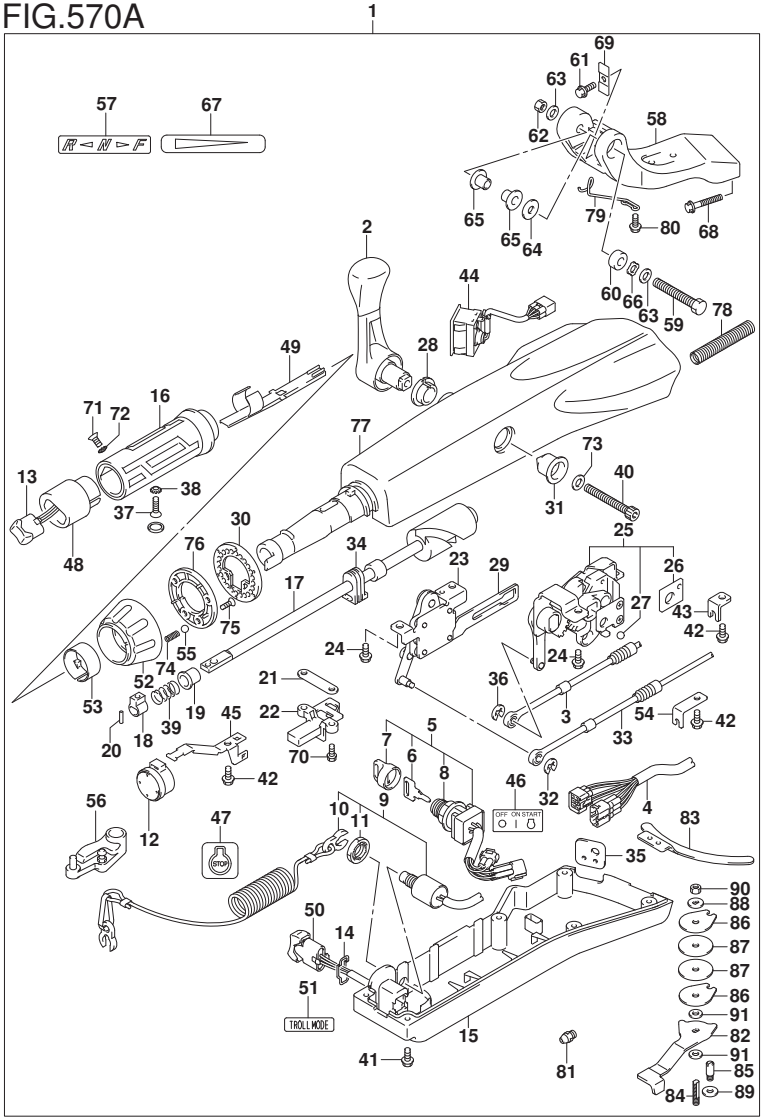

FIG.570A (2-F-8) OPT:TILLER HANDLE (DF40A)(DF50A)

REF NO.	PART NO.	DESCRIPTION	Q'TY	REMARKS
19	63225-88L00	.BUSH, HANDLE ROD	1	
20	63227-93200	.PIN, HANDLE ROD	1	
21	63235-88L00	.PLATE, THROTTLE SHAFT	1	
22	63246-88L00	.STOPPER THROTTLE ADJ	1	
23	63250-88L00	.ARM ASSY, THROTTLE	1	
24	63251-87J00	.BOLT, SHIFT GEAR ASSY	4	
25	63260-88L00	.GEAR ASSY, SHIFT	1	
26	63272-87J00	..PLATE, BALL GUIDE	1	
27	63273-87J00	..BALL	1	
28	63262-87J00	.BUSH, SHIFT LEVER	1	
29	63271-87J00	.PLATE, LOCK	1	
30	63248-99J00	.PLATE, THROTTLE ADJ NOTCH	1	
31	63261-87J00	.BUSH, SHIFT GEAR	1	
32	63274-87J00	.E RING	1	
33	63610-88L00	.CABLE, THROTTLE	1	
34	37853-88L90	.GROMMET, PTT SWITCH LEAD	1	
35	63626-88L00	.GROMMET, WIRE HARNESS	1	
36	67292-87J00	.E RING	2	
37	09126-06015	.SCREW (6X23)	1	
38	09163-06001	.LOCK WASHER	1	
39	09440-12027	.SPRING	1	
40	21112-88L00	.BOLT SHIFT LEVER	1	
41	09125-05047	.SCREW (5X14)	6	
42	63611-88L00	.BOLT CLAMP BRACKET	3	
43	63612-87J00	.BRACKET, CLAMP	1	
44	34200-87L00	.TACHOMETER ASSY, WITH MONITOR	1	
45	36617-88L90	.CLAMP PLATE, MAIN HARNESS	1	
46	37112-88L91	.LABEL, IGNITION SWITCH	1	
47	37835-95D00	.LABEL, STOP	1	

DF60A_E01_018_570A
OPT:TILLER HANDLE

FIG.570A

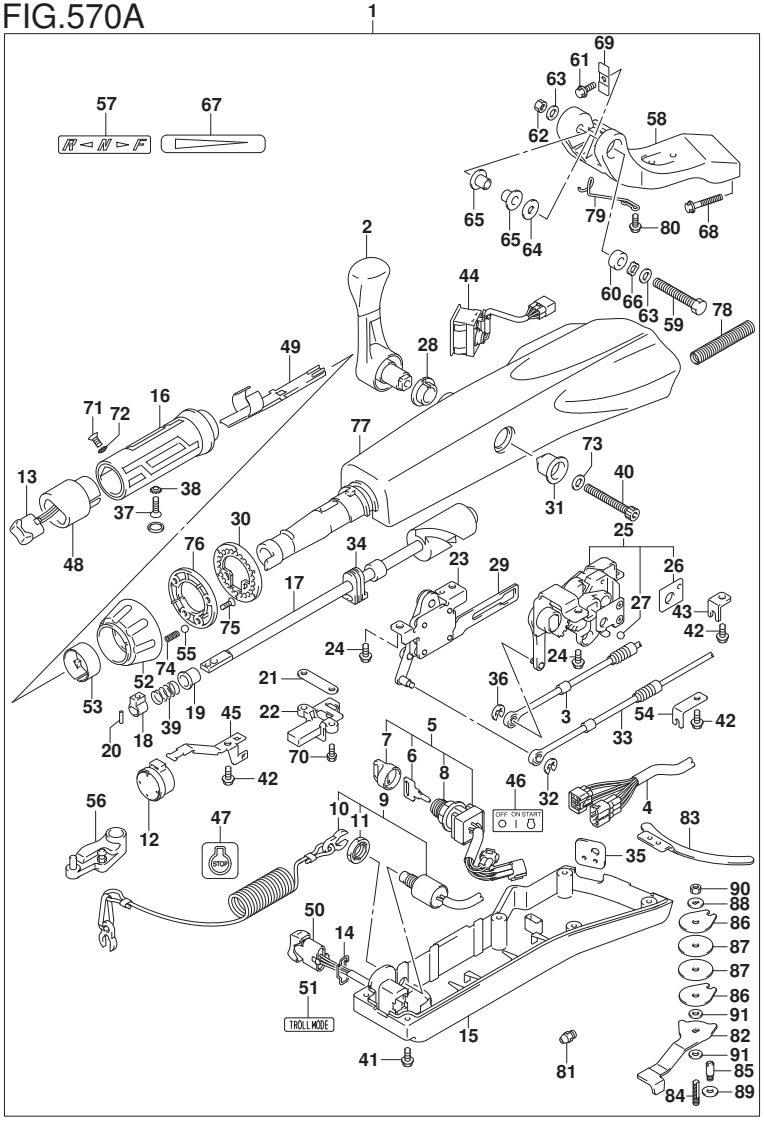

FIG.570A (2-F-9) OPT:TILLER HANDLE (DF40A)(DF50A)

REF NO.	PART NO.	DESCRIPTION	Q'TY	REMARKS
48	37851-88L90	.BASE, PTT SWITCH	1	
49	37852-88L90	.HARNESS, GUIDE	1	
50	37861-87L11	.SWITCH, TROLLING CONTROL	1	
51	37864-88L91	.LABEL, TROLL MODE	1	
52	63244-99J00	.KNOB, THROTTLE ADJ	1	
53	63245-99J00	.BUSH, THROTTLE ADJ	1	
54	63612-88L10	.BRACKET, CLAMP SHIFT	1	
55	09260-10006	.BALL	1	
56	19120-88L11	.LEVER, THROTTLE	1	
57	21131-88L01	.MARK, CLUTCH SHIFT	1	
58	43761-88L01-YAY	.BRACKET, TILLER HANDLE (BLACK)	1	
59	43762-88L00	.BOLT TILLER HANDLE PIVOT	1	
60	43768-88L00	.SPACER, TILLER HANDLE	1	
61	09116-08137	.BOLT (8X22)	1	
62	09159-12014	.NUT	1	
63	09160-12066	.WASHER (12.5X22X2.5)	2	
64	09160-12124	.WASHER (12.5X32X1.5)	1	
65	63115-88L00	.BUSH, TILLER HANDLE	2	
66	09164-13010	.WASHER	1	
67	63215-93110	.MARK, HANDLE GRIP	1	
68	09116-10150	.BOLT (10X55)	2	
69	63132-88L00	.STOPPER, TILLER HANDLE	1	
70	63251-88L90	.BOLT	2	
71	37855-88L90	.SCREW, THROTTLE GRIP	1	
72	37854-88L90	.WASHER,THROTTLE GRIP	1	
73	63258-88L00	.WASHER	1	
74	09440-06037	.SPRING	1	
75	03522-05169	.SCREW	3	

DF60A_E01_018_570A
OPT:TILLER HANDLE

FIG.570A

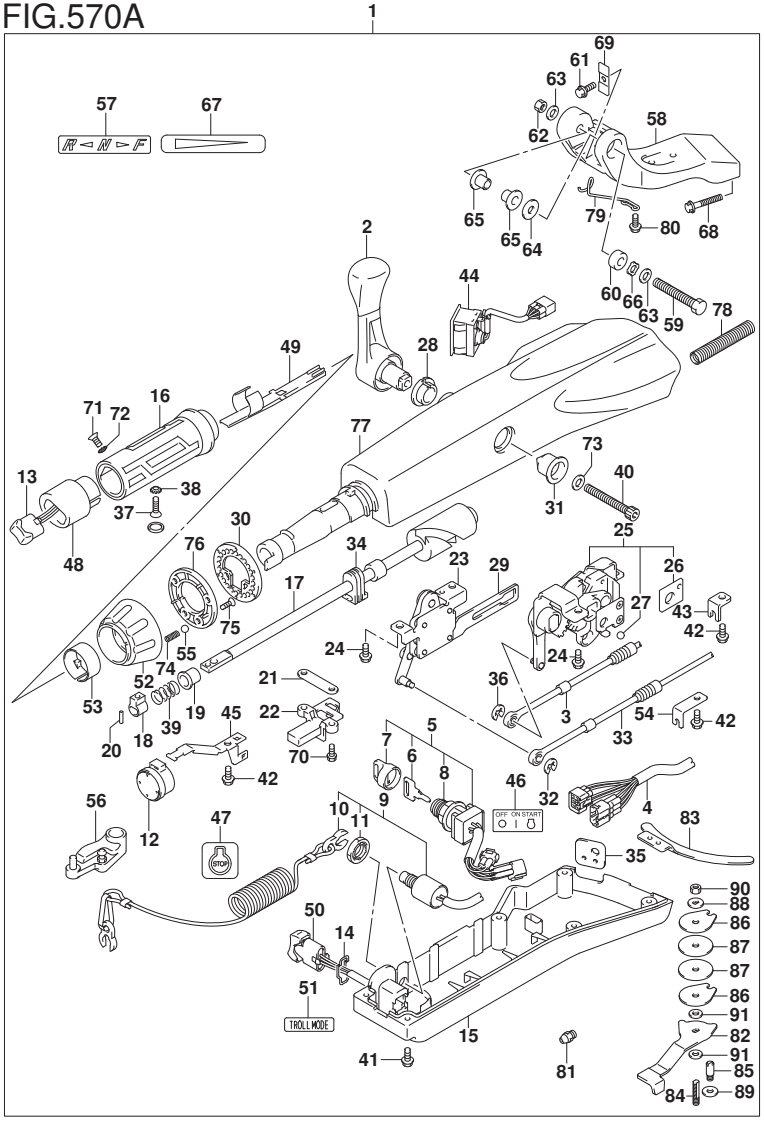

FIG.570A (2-F-10) OPT:TILLER HANDLE (DF40A)(DF50A)

REF NO.	PART NO.	DESCRIPTION	Q'TY	REMARKS
76	63247-99J00	.PLATE, THROTTLE ADJ KNOB	1	
77	63111-88L00-YAY	.HOUSING, TILLER HANDLE (BLACK)	1	
78	33834-88L00	.TUBE, CABLE PROTECTOR	1	
79	65793-88L00	.HOLDER, FUEL HOSE	1	
80	09116-06237	.BOLT (6X15)	2	
81	22511-99011	.NIPPLE, GREASE	1	
82	43411-88L00	.ADJUSTER, STEERING	1	
83	43415-88L00	.PLATE, STEERING ADJUSTER	1	
84	43512-88L00	.SHAFT, STEERING ADJ THREAD	1	
85	43513-88L00	.BOLT, STEERING ADJUSTER	1	
86	43514-88L00	.PLATE, STEERING ADJ FRICTION	2	
87	43515-88L00	.WASHER, STRG ADJ FRICTION PLATE	2	
88	43516-88L00	.WASHER, STRG ADJ FRICTION	1	
89	43517-88L00	.SPACER, STEERING ADJUSTER	1	
90	09159-08059	.NUT	1	
91	09161-08011	.WASHER (8.2X18X1.2)	2	

DF40A E01
DF50A E01

DF60A_E01_018_570A
OPT:TILLER HANDLE

FIG.570B

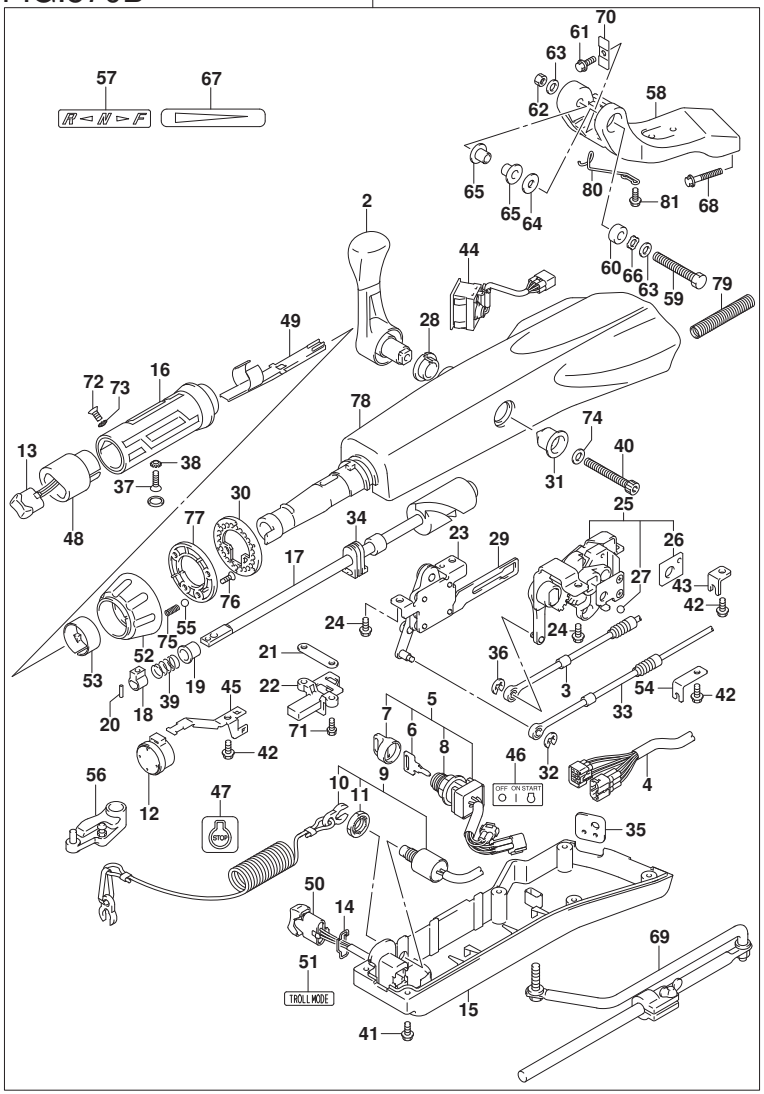

FIG.570B (2-F-11) OPT:TILLER HANDLE (DF40AST)(DF60A)(DF50AVT)(DF60AVT)

REF NO.	PART NO.	DESCRIPTION	Q'TY	REMARKS
1	63002-88L12-YAY	KIT TILLER HANDLE (BLACK)	1	
2	21110-88L00	.LEVER, SHIFT	1	
3	23230-88L00	.CABLE, SHIFT	1	
4	36620-88L10	.WIRE ASSY, HANDLE	1	
5	37110-87L01	.SWITCH ASSY, IGNITION	1	
6-1	37141-99E00	..KEY (931)	1	
6-2	37141-99E10	..KEY (932)	1	
6-3	37141-99E20	..KEY (933)	1	
6-4	37141-99E30	..KEY (934)	1	
6-5	37141-99E40	..KEY (935)	1	
6-6	37141-99E50	..KEY (936)	1	
6-7	37141-99E60	..KEY (937)	1	
6-8	37141-99E70	..KEY (938)	1	
6-9	37141-99E80	..KEY (939)	1	
6-10	37141-99E90	..KEY (940)	1	
6-11	37141-99EA0	..KEY (941)	1	
6-12	37141-99EB0	..KEY (942)	1	
7	37143-99E00	..CAP, KEY	1	
8	37149-93J00	..CAP, CYLINDER BODY	1	
9	37820-87L01	.SWITCH ASSY, EMERGENCY	1	
10	37823-92E01	..PLATE, LOCK	1	
11	37826-92J00	..NUT	1	
12	38500-93J90	.BUZZER	1	
13	37850-87L01	.SWITCH ASSY, PTT	1	
14	37852-87J00	.PLATE, TRIM SWITCH	1	

DF60A_E01_018_570B
OPT:TILLER HANDLE

FIG.570B

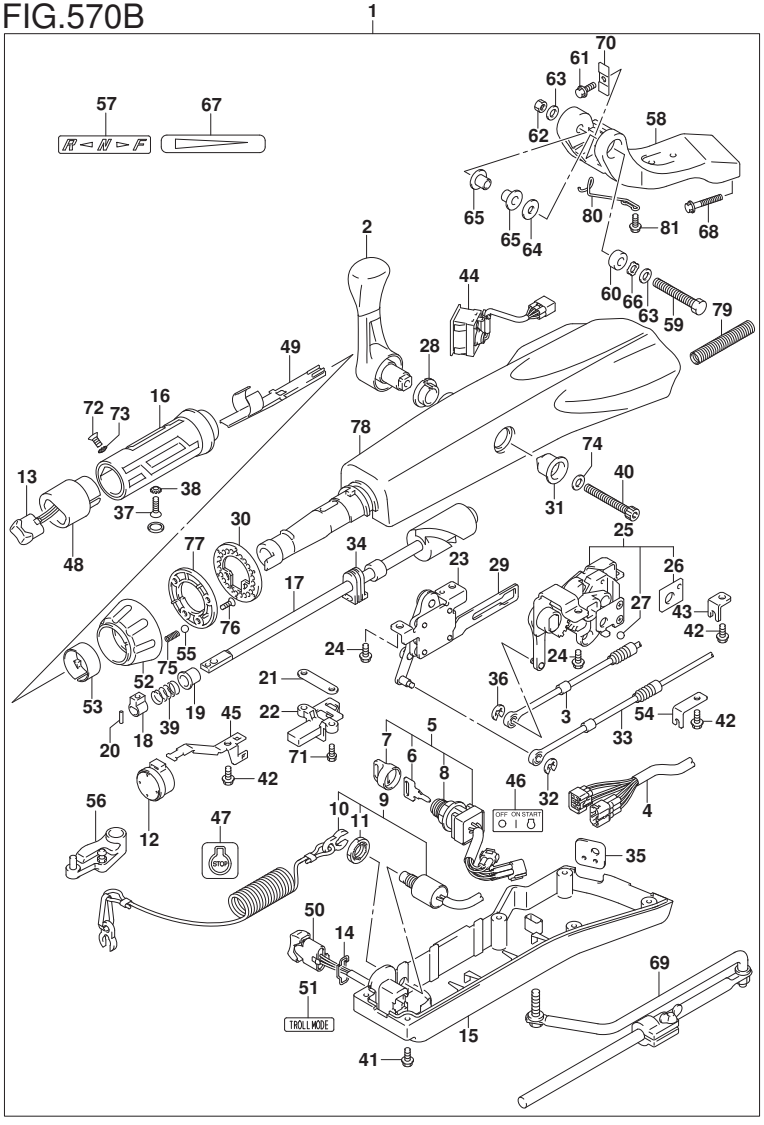

FIG.570B (2-F-12) OPT:TILLER HANDLE (DF40AST)(DF60A)(DF50AVT)(DF60AVT)

REF NO.	PART NO.	DESCRIPTION	Q'TY	REMARKS
15	63121-88L00	.COVER, UNDER	1	
16	63210-88L00	.GRIP, HANDLE	1	
17	63221-88L00	.SHAFT, THROTTLE	1	
18	63223-92D00	.STOPPER, HANDLE ROD	1	
19	63225-88L00	.BUSH, HANDLE ROD	1	
20	63227-93200	.PIN, HANDLE ROD	1	
21	63235-88L00	.PLATE, THROTTLE SHAFT	1	
22	63246-88L00	.STOPPER THROTTLE ADJ	1	
23	63250-88L00	.ARM ASSY, THROTTLE	1	
24	63251-87J00	.BOLT, SHIFT GEAR ASSY	4	
25	63260-88L00	.GEAR ASSY, SHIFT	1	
26	63272-87J00	..PLATE, BALL GUIDE	1	
27	63273-87J00	..BALL	1	
28	63262-87J00	.BUSH, SHIFT LEVER	1	
29	63271-87J00	.PLATE, LOCK	1	
30	63248-99J00	.PLATE, THROTTLE ADJ NOTCH	1	
31	63261-87J00	.BUSH, SHIFT GEAR	1	
32	63274-87J00	.E RING	1	
33	63610-88L00	.CABLE, THROTTLE	1	
34	37853-88L90	.GROMMET, PTT SWITCH LEAD	1	
35	63626-88L00	.GROMMET, WIRE HARNESS	1	
36	67292-87J00	.E RING	2	
37	09126-06015	.SCREW (6X23)	1	
38	09163-06001	.LOCK WASHER	1	
39	09440-12027	.SPRING	1	

DF60A_E01_018_570B
OPT:TILLER HANDLE

FIG.570B

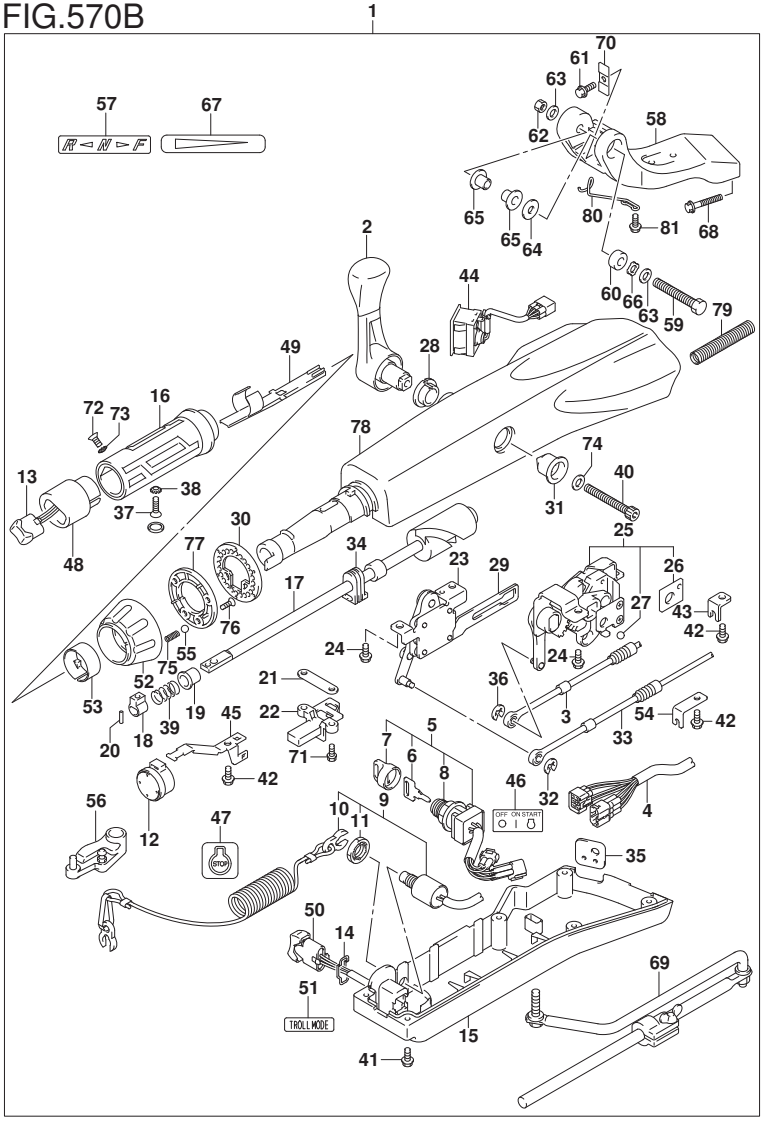

FIG.570B (2-F-13) OPT:TILLER HANDLE (DF40AST)(DF60A)(DF50AVT)(DF60AVT)

REF NO.	PART NO.	DESCRIPTION	Q'TY	REMARKS
40	21112-88L00	.BOLT SHIFT LEVER	1	
41	09125-05047	.SCREW (5X14)	6	
42	63611-88L00	.BOLT CLAMP BRACKET	3	
43	63612-87J00	.BRACKET, CLAMP	1	
44	34200-87L00	.TACHOMETER ASSY, WITH MONITOR	1	
45	36617-88L90	.CLAMP PLATE, MAIN HARNESS	1	
46	37112-88L91	.LABEL, IGNITION SWITCH	1	
47	37835-95D00	.LABEL, STOP	1	
48	37851-88L90	.BASE, PTT SWITCH	1	
49	37852-88L90	.HARNESS, GUIDE	1	
50	37861-87L11	.SWITCH, TROLLING CONTROL	1	
51	37864-88L91	.LABEL, TROLL MODE	1	
52	63244-99J00	.KNOB, THROTTLE ADJ	1	
53	63245-99J00	.BUSH, THROTTLE ADJ	1	
54	63612-88L10	.BRACKET, CLAMP SHIFT	1	
55	09260-10006	.BALL	1	
56	19120-88L11	.LEVER, THROTTLE	1	
57	21131-88L01	.MARK, CLUTCH SHIFT	1	
58	43761-88L01-YAY	.BRACKET, TILLER HANDLE (BLACK)	1	
59	43762-88L00	.BOLT TILLER HANDLE PIVOT	1	
60	43768-88L00	.SPACER, TILLER HANDLE	1	
61	09116-08137	.BOLT (8X22)	1	
62	09159-12014	.NUT	1	
63	09160-12066	.WASHER (12.5X22X2.5)	2	

DF60A_E01_018_570B
OPT:TILLER HANDLE

FIG.570B

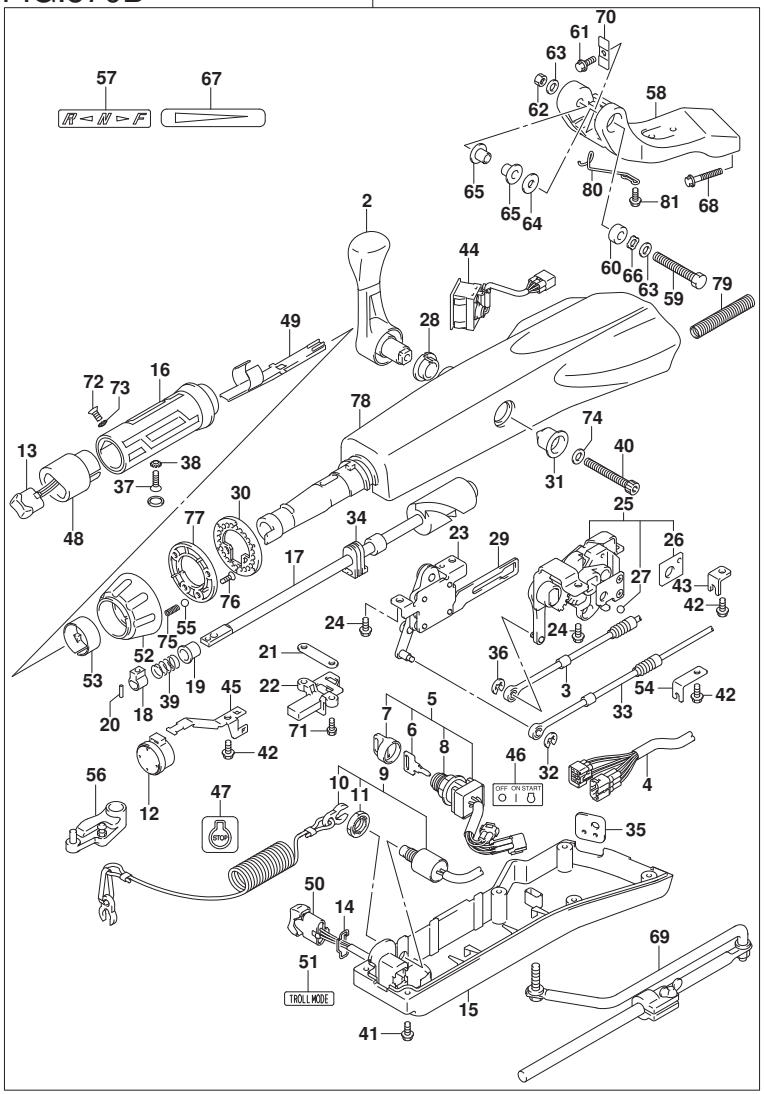

FIG.570B (2-F-14) OPT:TILLER HANDLE (DF40AST)(DF60A)(DF50AVT)(DF60AVT)

REF NO.	PART NO.	DESCRIPTION	Q'TY	REMARKS
64	09160-12124	.WASHER (12.5X32X1.5)	1	
65	63115-88L00	.BUSH, TILLER HANDLE	2	
66	09164-13010	.WASHER	1	
67	63215-93110	.MARK, HANDLE GRIP	1	
68	09116-10150	.BOLT (10X55)	2	
69	43770-99E03	.ADJUSTER ASSY, STEERING	1	
70	63132-88L00	.STOPPER, TILLER HANDLE	1	
71	63251-88L90	.BOLT	2	
72	37855-88L90	.SCREW, THROTTLE GRIP	1	
73	37854-88L90	.WASHER,THROTTLE GRIP	1	
74	63258-88L00	.WASHER	1	
75	09440-06037	.SPRING	1	
76	03522-05169	.SCREW	3	
77	63247-99J00	.PLATE, THROTTLE ADJ KNOB	1	
78	63111-88L00-YAY	.HOUSING, TILLER HANDLE (BLACK)	1	
79	33834-88L00	.TUBE, CABLE PROTECTOR	1	
80	65793-88L00	.HOLDER, FUEL HOSE	1	
81	09116-06237	.BOLT (6X15)	2	

DF40AST E34
DF60A E01
DF60A E40
DF50AVT E01
DF60AVT E01
DF60AVT E40

DF60A_E01_018_570B
OPT:TILLER HANDLE

FIG.575A

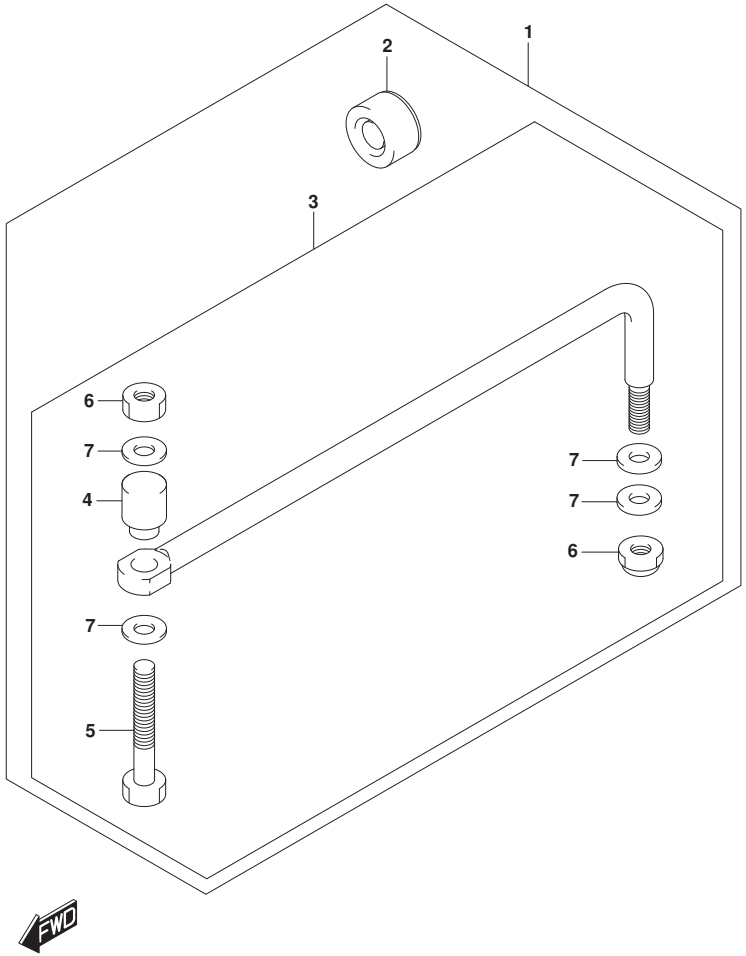

FIG.575A (2-F-15) OPT:DRAG LINK (DF40AQH)(DF40ATH)(DF50ATH)

REF NO.	PART NO.	DESCRIPTION	Q'TY	REMARKS
1	67700-93J00	LINK SET, DRAG	1	
2	41161-94400	.SEAL, STEERING CABLE	1	
3	67701-87J11	.LINK ASSY, DRAG	1	
4	67721-87J00	..SPACER	1	
5	67725-99E00	..BOLT, DRAG LINK	1	
6	67726-99E00	..NUT	2	
7	67728-99E00	..WASHER	4	

DF40AQH E01
DF40ATH E01
DF50ATH E01

DF60A_E01_018_575A
OPT:DRAG LINK

FIG.575B

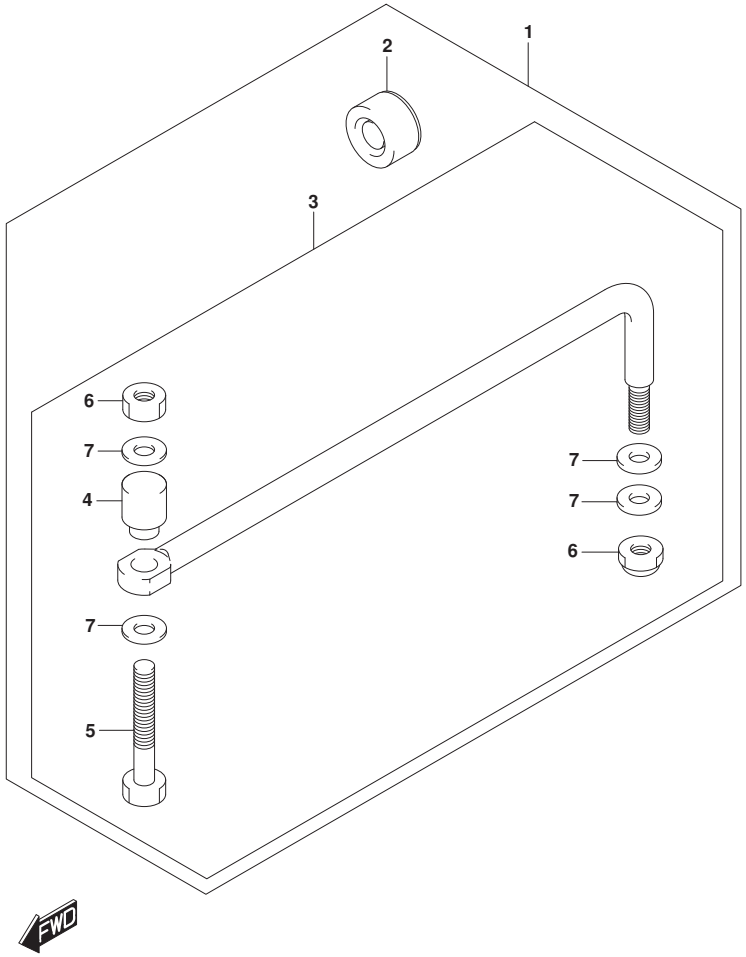

FIG.575B (2-G-2) OPT:DRAG LINK (DF60AQH)(DF60ATH)(DF50AVTH)(DF60AVTH)

REF NO.	PART NO.	DESCRIPTION	Q'TY	REMARKS
1	67700-93J00	LINK SET, DRAG	1	
2	41161-94400	.SEAL, STEERING CABLE	1	
3	67701-87J11	.LINK ASSY, DRAG	1	
4	67721-87J00	..SPACER	1	
5	67725-99E00	..BOLT, DRAG LINK	1	
6	67726-99E00	..NUT	2	
7	67728-99E00	..WASHER	4	

DF60AQH E01
DF60AQH E40
DF60ATH E01
DF60ATH E40
DF50AVTH E01
DF60AVTH E01
DF60AVTH E40

DF60A_E01_018_575B
OPT:DRAG LINK

FIG.585A

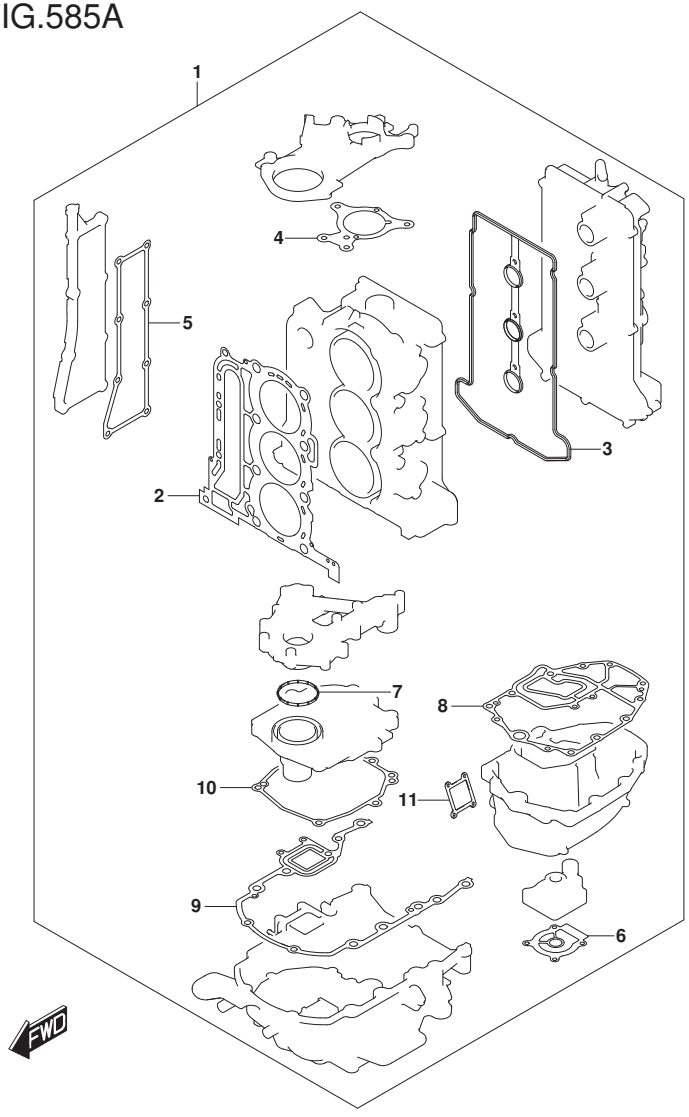

FIG.585A (2-G-3) OPT:GASKET SET

REF NO.	PART NO.	DESCRIPTION	Q'TY	REMARKS
1	11400-88871	GASKET SET	1	
2	11141-88L00	.GASKET, CYLINDER HEAD	1	
3	11189-88L00	.GASKET, CYLINDER HEAD COVER	1	
4	11413-88L00	.GASKET, UPPER OIL SEAL	1	
5	14151-88L00	.GASKET, EXHAUST COVER	1	
6	17472-96303	.GASKET, PUMP CASE UNDER	1	NOT AVAILABLE FOR AV ORDER 17472-87E10 FOR AV
7	11433-88L00	.GASKET, UNDER OIL SEAL	1	
8	11489-88L01	.GASKET, OIL PAN	1	
9	51211-88L00	.GASKET, ENGINE HOLDER	1	
10	51123-88L00	.GASKET, MOUNT CASE COVER	1	
11	11552-88L00	.GASKET, OIL PAN WTR JKT COV	1	

DF60A_E01_018_585A
OPT:GASKET SET

FIG.600A

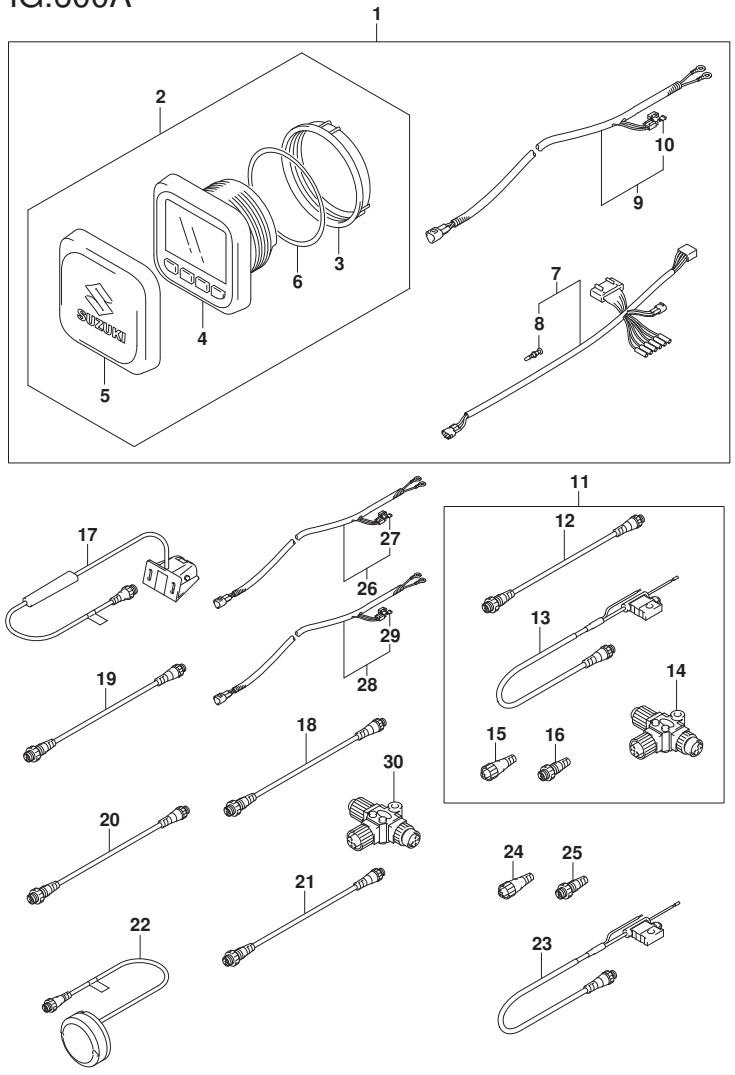

FIG.600A (2-G-4) OPT:MULTI FUNCTION GAUGE (DF40A)(DF40AST)(DF50A)

REF NO.	PART NO.	DESCRIPTION	Q'TY	REMARKS
1	34000-96L42	KIT, SINGLE GAUGE MECH	1	
2	34011-96L12	.SET, MULTI GAUGE	1	
3	34112-96L00	..NUT, GAUGE	1	
4	34193-96L00	..BEZEL, GAUGE	1	
5	34211-96L00	..COVER, GAUGE	1	
6	34825-96L00	..PACKING, GAUGE	1	
7	36661-96L10	.ADAPTER, GAUGE	1	
8	36615-96300	..TERMINAL	5	
9	36663-98J10	.WIRE, GAUGE POWER (6M)	1	
10	09481-05501	..FUSE (5A)	1	
11	36001-88L00	SET, WIRE	1	
12	36662-88L10	.WIRE, 2 EXTENSION	1	
13	36663-88L00	.HARNESS ASSY, NETWORK POWER	1	
14	36664-88L00	.CONNECTOR, BRANCH	1	
15	36665-88L00	.UNIT, RESISTOR FEMALE	1	
16	36665-88L10	.UNIT, RESISTOR MALE	1	
17	34190-88L00	SENSOR ASSY, PAD WHEEL	1	
18	36662-88L10	WIRE, 2 EXTENSION	1	
19	36662-88L20	WIRE, 6 EXTENSION	1	
20	36662-88L30	WIRE, 15 EXTENSION	1	
21	36662-88L00	WIRE, 25 EXTENSION	1	
22	39950-88L02	MODULE ASSY, GPS RECEIVER	1	
23	36663-88L00	HARNESS ASSY, NETWORK POWER	1	
24	36665-88L00	UNIT, RESISTOR FEMALE	1	
25	36665-88L10	UNIT, RESISTOR MALE	1	
26	36663-98J00	WIRE, GAUGE POWER (2.5M)	1	
27	09481-05501	.FUSE (5A)	1	
28	36663-98J10	WIRE, GAUGE POWER (6M)	1	
29	09481-05501	.FUSE (5A)	1	
30	36664-88L00	CONNECTOR, BRANCH	1	

DF40A E01
DF40AST E34
DF50A E01

DF60A_E01_018_600A
OPT:MULTI FUNCTION GAUGE

FIG.600B

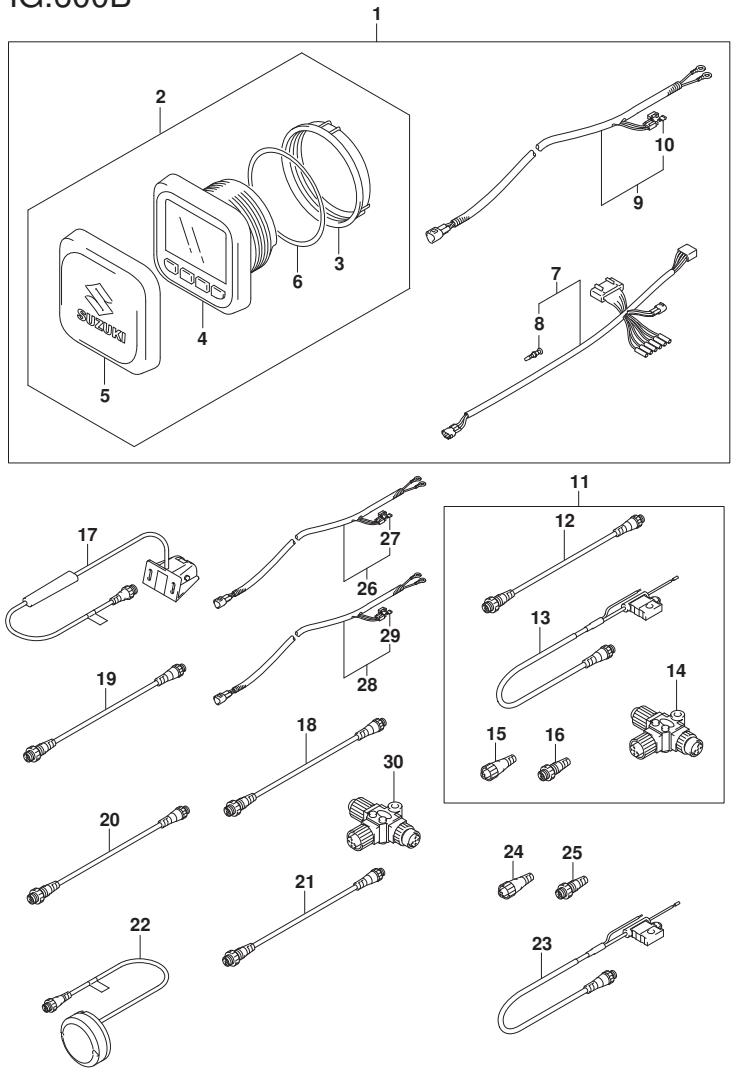

FIG.600B (2-G-5) OPT:MULTI FUNCTION GAUGE (DF60A)(DF50AVT)(DF60AVT)

REF NO.	PART NO.	DESCRIPTION	Q'TY	REMARKS
1	34000-96L42	KIT, SINGLE GAUGE MECH	1	
2	34011-96L12	.SET, MULTI GAUGE	1	
3	34112-96L00	..NUT, GAUGE	1	
4	34193-96L00	..BEZEL, GAUGE	1	
5	34211-96L00	..COVER, GAUGE	1	
6	34825-96L00	..PACKING, GAUGE	1	
7	36661-96L10	.ADAPTER, GAUGE	1	
8	36615-96300	..TERMINAL	5	
9	36663-98J10	.WIRE, GAUGE POWER (6M)	1	
10	09481-05501	..FUSE (5A)	1	
11	36001-88L00	SET, WIRE	1	
12	36662-88L10	.WIRE, 2 EXTENSION	1	
13	36663-88L00	.HARNESS ASSY, NETWORK POWER	1	
14	36664-88L00	.CONNECTOR, BRANCH	1	
15	36665-88L00	.UNIT, RESISTOR FEMALE	1	
16	36665-88L10	.UNIT, RESISTOR MALE	1	
17	34190-88L00	SENSOR ASSY, PAD WHEEL	1	
18	36662-88L10	WIRE, 2 EXTENSION	1	
19	36662-88L20	WIRE, 6 EXTENSION	1	
20	36662-88L30	WIRE, 15 EXTENSION	1	
21	36662-88L00	WIRE, 25 EXTENSION	1	
22	39950-88L02	MODULE ASSY, GPS RECEIVER	1	
23	36663-88L00	HARNESS ASSY, NETWORK POWER	1	
24	36665-88L00	UNIT, RESISTOR FEMALE	1	
25	36665-88L10	UNIT, RESISTOR MALE	1	

DF60A_E01_018_600B
OPT:MULTI FUNCTION GAUGE

FIG.600B

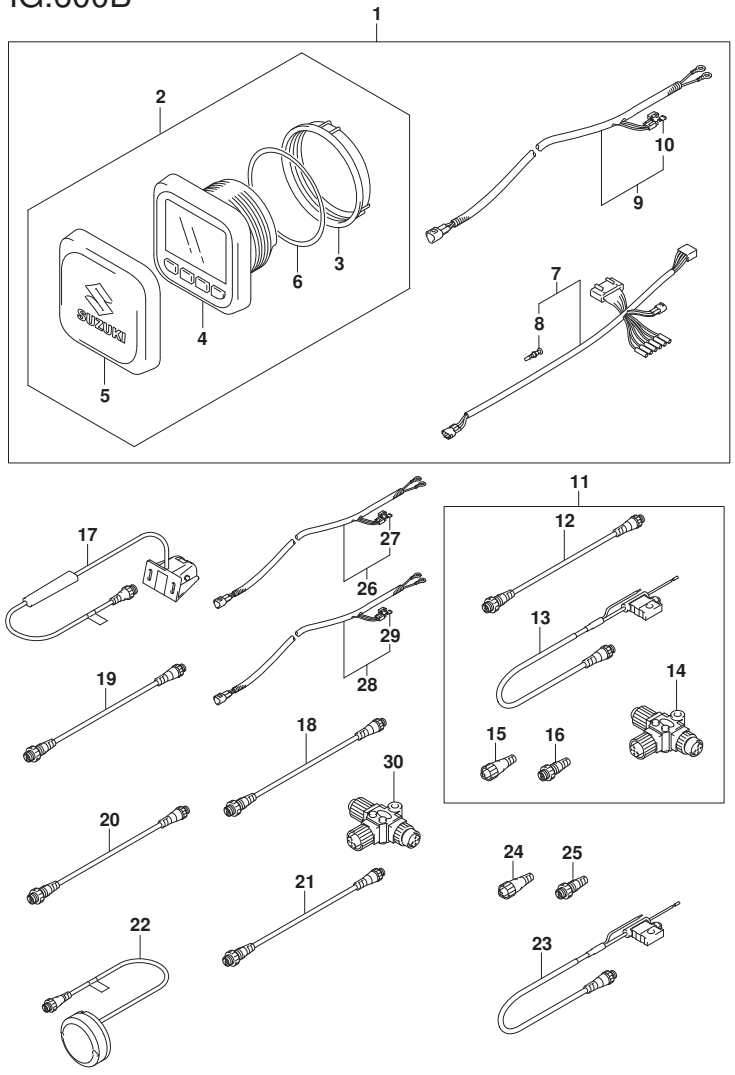

FIG.600B (2-G-6) OPT:MULTI FUNCTION GAUGE (DF60A)(DF50AVT)(DF60AVT)

REF NO.	PART NO.	DESCRIPTION	Q'TY	REMARKS
26	36663-98J00	WIRE, GAUGE POWER (2.5M)	1	
27	09481-05501	.FUSE (5A)	1	
28	36663-98J10	WIRE, GAUGE POWER (6M)	1	
29	09481-05501	.FUSE (5A)	1	
30	36664-88L00	CONNECTOR, BRANCH	1	

DF60A E01
DF60A E40
DF50AVT E01
DF60AVT E01
DF60AVT E40

DF60A_E01_018_600B
OPT:MULTI FUNCTION GAUGE

FIG.600C

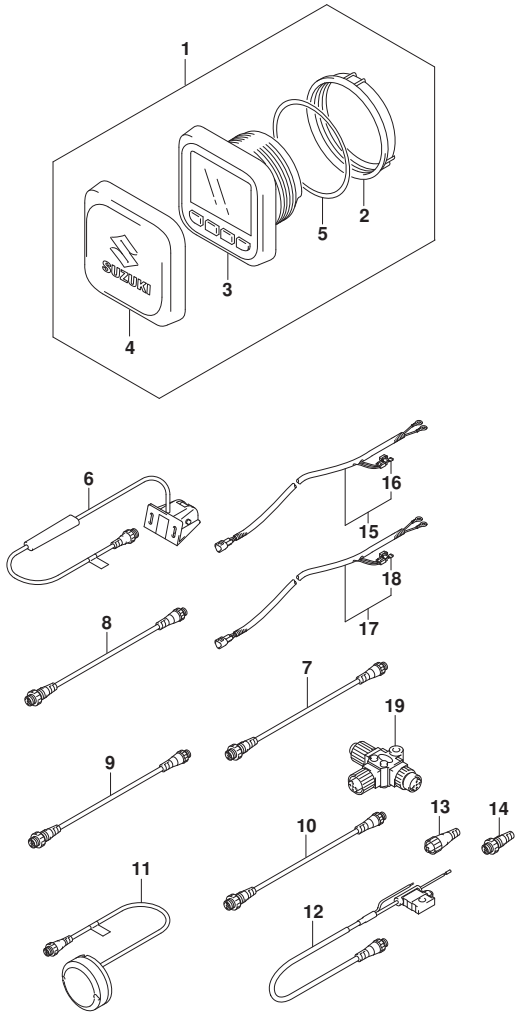

FIG.600C (2-G-7) OPT:MULTI FUNCTION GAUGE (DF40AQH)(DF40ATH)(DF50ATH)

REF NO.	PART NO.	DESCRIPTION	Q'TY	REMARKS
1	34011-96L12	SET, MULTI GAUGE	1	
2	34112-96L00	.NUT, GAUGE	1	
3	34193-96L00	.BEZEL, GAUGE	1	
4	34211-96L00	.COVER, GAUGE	1	
5	34825-96L00	.PACKING, GAUGE	1	
6	34190-88L00	SENSOR ASSY, PAD WHEEL	1	
7	36662-88L10	WIRE, 2 EXTENSION	1	
8	36662-88L20	WIRE, 6 EXTENSION	1	
9	36662-88L30	WIRE, 15 EXTENSION	1	
10	36662-88L00	WIRE, 25 EXTENSION	1	
11	39950-88L02	MODULE ASSY, GPS RECEIVER	1	
12	36663-88L00	HARNESS ASSY, NETWORK POWER	1	
13	36665-88L00	UNIT, RESISTOR FEMALE	1	
14	36665-88L10	UNIT, RESISTOR MALE	1	
15	36663-98J00	WIRE, GAUGE POWER (2.5M)	1	
16	09481-05501	.FUSE (5A)	1	
17	36663-98J10	WIRE, GAUGE POWER (6M)	1	
18	09481-05501	.FUSE (5A)	1	
19	36664-88L00	CONNECTOR, BRANCH	1	

DF40AQH E01
DF40ATH E01
DF50ATH E01

DF60A_E01_018_600C
OPT:MULTI FUNCTION GAUGE

FIG.600D

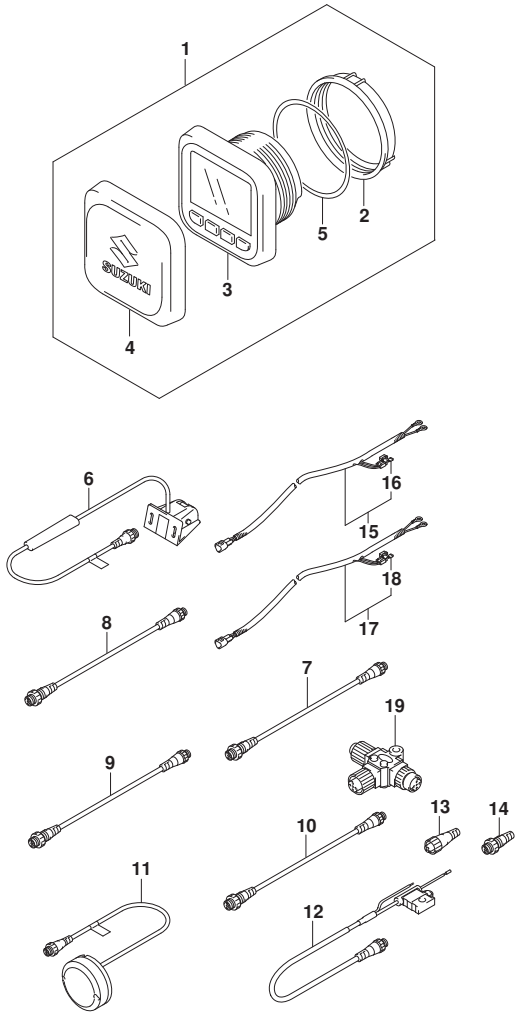

FIG.600D (2-G-8) OPT:MULTI FUNCTION GAUGE (DF60AQH)(DF60ATH)(DF50AVTH)(DF6

REF NO.	PART NO.	DESCRIPTION	Q'TY	REMARKS
1	34011-96L12	SET, MULTI GAUGE	1	
2	34112-96L00	.NUT, GAUGE	1	
3	34193-96L00	.BEZEL, GAUGE	1	
4	34211-96L00	.COVER, GAUGE	1	
5	34825-96L00	.PACKING, GAUGE	1	
6	34190-88L00	SENSOR ASSY, PAD WHEEL	1	
7	36662-88L10	WIRE, 2 EXTENSION	1	
8	36662-88L20	WIRE, 6 EXTENSION	1	
9	36662-88L30	WIRE, 15 EXTENSION	1	
10	36662-88L00	WIRE, 25 EXTENSION	1	
11	39950-88L02	MODULE ASSY, GPS RECEIVER	1	
12	36663-88L00	HARNESS ASSY, NETWORK POWER	1	
13	36665-88L00	UNIT, RESISTOR FEMALE	1	
14	36665-88L10	UNIT, RESISTOR MALE	1	
15	36663-98J00	WIRE, GAUGE POWER (2.5M)	1	
16	09481-05501	.FUSE (5A)	1	
17	36663-98J10	WIRE, GAUGE POWER (6M)	1	
18	09481-05501	.FUSE (5A)	1	
19	36664-88L00	CONNECTOR, BRANCH	1	

DF60AQH E01
DF60AQH E40
DF60ATH E01
DF60ATH E40
DF50AVTH E01
DF60AVTH E01
DF60AVTH E40

DF60A_E01_018_600D
OPT:MULTI FUNCTION GAUGE

10000

PART NO.	FIG.NO.-REF.NO.
11100-88L10	111A-1
	111B-1
	111C-1
	111D-1
11112-88L00	113A-7
11115-73G01-001	111A-2
	111A-29
	111B-2
	111B-29
	111C-2
	111C-29
	111D-2
	111D-29
11117-89J20	113A-4
11119-87J00	111A-10
	111B-10
	111C-10
	111D-10
11141-88L00	111A-11
	111B-11
	111C-11
	111D-11
	585A-2
11170-88L10	111A-16
	111B-16
	111C-16
	111D-16
11173-88L00	111A-20
	111B-20
	111C-20
	111D-20
11174-88L00	111A-22
	111B-22
	111C-22
	111D-22
11189-88L00	111A-17
	111B-17
	111C-17
	111D-17
	585A-3
11194-88L10	111A-26
	111B-26
	111C-26
	111D-26
11196-88L00	162A-8

PART NO.	FIG.NO.-REF.NO.
	162B-8
	162C-8
11261-93J00	111A-5
	111B-5
	111C-5
	111D-5
11291-88L00	113A-1
11301-88L10	113A-3
11382-93J00	111A-14
	111B-14
	111C-14
	111D-14
11400-88871	585A-1
11411-88L00	136A-6
11413-88L00	136A-7
	585A-4
11433-88L00	175A-1
	585A-7
11489-88L01	180A-1
	180B-1
	180C-1
	585A-8
11501-88L01-Y5S	180A-2-2
11501-88L01-YAY	180A-2-1
	180B-2
	180C-2
11510-88L00	136A-1
11514-88L00	136A-5
11543-88L00	180A-11
	180B-11
	180C-11
11551-88L00-Y5S	180A-6-2
11551-88L00-YAY	180A-6-1
	180B-6
	180C-6
11552-88L00	180A-7
	180B-7
	180C-7
	585A-11
12100-51810-0A0	116A-8-1
12100-51810-0B0	116A-8-2
12100-51810-0C0	116A-8-3
12100-51810-0D0	116A-8-4
12100-51810-0E0	116A-8-5
12100-88L01-050	116A-13
12111-88L00	116A-1
12140-88L01	116A-2
12140-88L01-050	116A-14
12151-54A50	116A-3
12160-88L01	116A-5

PART NO.	FIG.NO.-REF.NO.
12163-69J00	116A-6
12220-88L00	116A-9
12281-87J00	116A-12
12340-75F00-0C0	116A-10-3
12340-75F00-0D0	116A-10-4
12340-75F00-0E0	116A-10-5
12340-75FA0-0A0	116A-10-1
12340-75FA0-0B0	116A-10-2
12710-88L00	121A-1
12720-88L00	121A-2
12741-88L00	121A-3
12761-88L00	119A-1
12771-87J00	119A-2
12776-85FA0	119A-3
12811-88L00	119A-4
12812-73G10	119A-7
12813-73G00	119A-8
12821-88L00	119A-11
12831-90J02	119A-9
12891-73G01	121A-7
12892-73G01-218	121A-8-1
12892-73G01-220	121A-8-2
12892-73G01-222	121A-8-3
12892-73G01-224	121A-8-4
12892-73G01-226	121A-8-5
12892-73G01-228	121A-8-6
12892-73G01-230	121A-8-7
12892-73G01-232	121A-8-8
12892-73G01-234	121A-8-9
12892-73G01-236	121A-8-10
12892-73G01-238	121A-8-11
12892-73G01-240	121A-8-12
12892-73G01-242	121A-8-13
12892-73G01-244	121A-8-14
12892-73G01-246	121A-8-15
12892-73G01-248	121A-8-16
12892-73G01-250	121A-8-17
12892-73G01-252	121A-8-18
12892-73G01-254	121A-8-19
12892-73G01-256	121A-8-20
12892-73G01-258	121A-8-21
12892-73G01-260	121A-8-22
12892-73G01-262	121A-8-23
12892-73G01-264	121A-8-24
12892-73G01-266	121A-8-25
12892-73G01-268	121A-8-26
12892-73G01-270	121A-8-27
12892-73G01-272	121A-8-28
12892-73G01-274	121A-8-29
12892-73G01-276	121A-8-30

PART NO.	FIG.NO.-REF.NO.
12892-73G01-278	121A-8-31
12892-73G01-280	121A-8-32
12892-73G01-282	121A-8-33
12892-73G01-284	121A-8-34
12892-73G01-286	121A-8-35
12892-73G01-288	121A-8-36
12892-73G01-290	121A-8-37
12892-73G01-292	121A-8-38
12892-73G01-294	121A-8-39
12892-73G01-296	121A-8-40
12892-73G01-298	121A-8-41
12892-73G01-300	121A-8-42
12911-88L00	121A-9
12915-73G20	121A-10
12921-87J11	121A-11
12931-78G00	121A-12
12932-24400	121A-13
12933-51E00	121A-14
13110-88L00	124A-1
	124B-1
	124C-1
	124D-1
	124E-1
13119-88L00	124A-2
	124B-2
	124C-2
	124D-2
	124E-2
13125-88L00	124A-3
	124B-3
	124C-3
	124D-3
	124E-3
13300-88L01	163A-1
	163B-1
	163C-1
	163D-1
13315-88L00	163A-2
	163B-2
	163C-2
	163D-2
13370-88L00	143A-2
13370-88L10	143B-2
13510-88L00	163A-6
	163B-6
	163C-6
	163D-6
13614-89J00	143B-15
13614-93J00	143B-16
13810-88L00	124A-10

PART NO.	FIG.NO.-REF.NO.
	124B-10
	124C-10
	124D-10
	124E-10
13813-88L00	124B-11
	124E-11
13815-88L00	163D-12
13820-88L00	124A-11
13820-88L10	124C-11
	124D-11
14141-88L00	124A-13
	124B-13
	124C-13
	124D-13
	124E-13
14151-88L00	124A-14
	124B-14
	124C-14
	124D-14
	124E-14
	585A-5
15100-90J11	146A-1
15191-88L20	146A-10
15192-88L20	146A-11
15197-88L00	146A-15
15200-88L00	143A-3
15200-88L10	143B-3
15410-88L00	146A-4
15419-87J00	146A-5
15421-88L00	146A-8
15422-96J00	146A-7
15600-88L03	143A-1
15600-88L13	143B-1
15612-88L00	143A-21
	143B-21
15613-88L00	143A-22
	143B-22
15613-92J00	143A-23
	143B-23
15614-88L00	143A-24
	143B-24
15626-88L00	143A-4
15626-88L10	143B-4
15628-99E00	143A-5
	143B-5
15629-99E10	143A-6
	143B-6
15641-88L00	143A-7
15641-88L10	143B-7
15641-88L31	143A-18

PART NO.	FIG.NO.-REF.NO.
	143B-18
15641-88L51	143A-19
	143B-19
15642-88L00	143A-8
	143B-8
15642-88L10	143A-20
	143B-20
15643-88L00	143A-17
	143B-17
15644-88L00	143A-13
15644-88L10	143B-13
15645-88L00	143A-14
	143B-14
15650-99E00	143A-9
	143B-9
15654-88L00	143A-10
	143B-10
15681-88L10	144A-7
	144B-7
15683-87J00	143A-11
	143B-11
15710-85K00	144A-1
	144B-1
15716-65DT0	144A-2
	144B-2
15750-88L10	144A-4
15750-88L20	144B-4
15760-88L00	143A-12
	143B-12
16400-88L00	175A-2
16510-87J00	175A-9
16519-87L00	175A-8
16520-88L00	175A-5
16910-88L00	180A-14
	180B-14
	180C-14
16930-88L00	180A-15
	180B-15
	180C-15
17400-88L00	160A-21
	160B-21
	160C-21
	160D-21
	160E-21
17400-99E10	160F-20
	160G-20
	160H-19
17410-88L00	160A-1
	160B-1
	160C-1

PART NO.	FIG.NO.-REF.NO.
	160D-1
	160E-1
17410-99E10	160F-1
	160G-1
	160H-1
17413-95J00	160A-2
	160B-2
	160C-2
	160D-2
17413-95J10	160E-2
17413-99E11	160F-18
	160G-18
17413-99E21	160H-17
17416-95J00	160A-3
	160B-3
	160C-3
	160D-3
	160E-3
17416-99E10	160F-19
	160G-19
	160H-18
17461-87E12	160F-2
	160G-2
	160H-2
17461-96312	160A-9
	160B-9
	160C-9
	160D-9
	160E-9
17471-95J01	160A-10
	160B-10
	160C-10
	160D-10
17471-95J10	160E-10
17471-99E00	160F-3
	160G-3
17471-99E10	160H-3
17472-87E10	160F-4
	160G-4
	160H-4
17472-96303	160A-11
	160B-11
	160C-11
	160D-11
	160E-11
	585A-6
17560-88L00	160A-12-1
	160C-12-1
17560-88L10	160A-12-2
	160B-12

PART NO.	FIG.NO.-REF.NO.
	160C-12-2
	160D-12-1
	160E-12-1
17560-88L20	160C-12-3
	160D-12-2
	160E-12-2
17560-88L30	160F-5
	160G-5-1
	160H-5-1
17560-88L40	160G-5-2
	160H-5-2
17562-87L00	160A-13
	160A-14
	160B-13
	160B-14
	160C-13
	160C-14
	160D-13
	160D-14
	160E-13
	160E-14
	160F-6
	160F-7
	160G-6
	160G-7
	160H-6
	160H-7
17564-87D00	160F-8
	160G-8
	160H-8
17564-88L00	160A-4
	160B-4
	160C-4
	160D-4
	160E-4
17611-90J00-Y5S	162A-1-2
17611-90J00-YAY	162A-1-1
	162B-1
	162C-1
17631-90J00	160F-9
	160G-9
	160H-9
17631-96320	160A-16
	160B-16
	160C-16
	160D-16
	160E-16
17632-90J00	160F-10
	160G-10
	160H-10

PART NO.	FIG.NO.-REF.NO.
17635-87E00	160A-18-1
	160B-18-1
	160C-18-1
	160D-18-1
	160E-18-1
17635-87E10	160A-18-2
	160B-18-2
	160C-18-2
	160D-18-2
	160E-18-2
	160F-21
	160G-21
	160H-20
17635-90J00	160F-11
	160G-11
	160H-11
17660-99E01	162A-2
	162B-2
	162C-2
17670-93953	162A-5
	162B-5
	162C-5
17681-88L00	162A-6
	162B-6
	162C-6
17712-88L00	162A-11
	162B-11
	162C-11
17913-93J00	180A-9
	180B-9
	180C-9
17914-93J00	180A-10
	180B-10
	180C-10
17917-87L00	420A-19
	420B-19
	420C-19
	420D-19
	420E-19
	420F-19
	420G-19
	420H-19
	420J-19
18137-88L01	124A-8
	124B-8
	124C-8
	124D-8
	124E-8
18210-88L00	420A-16
	420B-16

PART NO.	FIG.NO.-REF.NO.
	420C-16
	420D-16
	420E-16
	420F-16
	420G-16
	420H-16
	420J-16
18498-88L10	143A-31
	143B-31
18498-94J20	162A-10
	162B-10
	162C-10
18498-96J20	146A-14
18498-99E10	146A-13
18498-99EA0	507A-6
19120-88L01	163A-7
	163D-7
19120-88L11	163B-7
	163C-7
	570A-56
	570B-56
19131-95502	163A-8
	163B-8
	163C-8
	163D-8
20000	
21110-88L00	444A-3
	444B-3
	444C-3
	570A-2
	570B-2
21112-88L00	444B-41
	444C-41
	570A-40
	570B-40
21112-88L10	444A-41
21121-93300	206A-13
	206B-13
	206C-13
	206D-13
	206E-13
	210A-1
	210B-1
21126-88L00	204A-1
	204B-1
	204C-1

PART NO.	FIG.NO.-REF.NO.
	204D-1
	204E-1
	204F-1
	204G-1
21131-88L01	444A-70
	444B-71
	444C-71
	570A-57
	570B-57
21151-88L00	204A-2
	204B-2
	204C-2
	204D-2
	204E-2
	204F-2
	204G-2
21210-88L01	204A-5
	204B-5
	204C-5
	204D-5
	204E-5
	204F-5
	204G-5
22511-99011	336A-5
	336B-5
	336B-33
	336C-5
	336C-33
	336D-5
	336E-5
	336F-5
	336G-5
	336H-5
	336J-5
	336K-5
	336L-5
	570A-81
23111-88L00	204A-6-1
	204E-6-1
	204F-6
	204G-6-1
23111-88L10	204A-6-2
	204B-6
	204C-6
	204D-6
	204E-6-2
	204G-6-2
23115-88L00	204A-8
	204B-8
	204C-8

PART NO.	FIG.NO.-REF.NO.
	204D-8
	204E-8
	204F-8
	204G-8
23210-88L00	204A-9
	204B-9
	204C-9
	204D-9
	204E-9
	204F-9
	204G-9
23213-89J01	204A-12
	204B-12
	204C-12
	204D-12
	204E-12
	204F-12
	204G-12
23214-89J00	204A-13
	204B-13
	204C-13
	204D-13
	204E-13
	204F-13
	204G-13
23230-88L00	444A-4
	444B-4
	444C-4
	570A-3
	570B-3
23311-95J00	204A-15
	204B-15
	204C-15
	204D-15
	204E-15
	204F-15
	204G-15
25111-88L00	206A-1-1
	206C-1-1
25111-88L10	206A-1-2
	206B-1
	206C-1-2
	206D-1-1
	206E-1-1
25111-88L20	206C-1-3
	206D-1-2
	206E-1-2
25111-88L30	210A-2
	210B-2-1
25111-88L40	210B-2-2

PART NO.	FIG.NO.-REF.NO.	PART NO.	FIG.NO.-REF.NO.	PART NO.	FIG.NO.-REF.NO.
25141-99E03	210A-3		160G-12		340B-6
	210B-3		160H-12	31136-87J10	340A-7
25205-94501	210A-4	29141-93J00	160A-5		340B-7
	210B-4		160B-5	31151-94J01	301A-4
25211-87J00	206A-2		160C-5	31152-90J00	301A-5
	206B-2		160D-5	31153-90J00	301A-6
	206C-2		160E-5	31170-94J00	301A-17
	206D-2		204A-7	31171-96J00	301A-7
	206E-2		204B-7	31173-88L11	340A-3
25211-94501	210A-5		204C-7		340B-3
	210B-5		204D-7	31173-94J01	301A-8
25212-94401	206A-5		204E-7	31191-96J00	301A-9
	206B-5		204F-7	31220-94J00	301A-10
	206C-5		204G-7	31310-90J00	301A-11
	206D-5		336D-26	31311-87J10	340A-2
	206E-5		336E-26		340B-2
25223-94400	206A-9		336F-26	31320-94J00	301A-12
	206B-9		336G-22	31341-94J00	301A-13
	206C-9		336H-26	31343-90J00	301A-14
	206D-9		336J-22	31344-90J00	301A-15
	206E-9		336K-26	31360-93J01	301A-16
25230-94300	210A-6		336L-22	31912-88L00	301A-18
	210B-6	29162-93J00	160A-6	31918-87L00	301A-19
25232-96302	206A-10		160B-6	32102-88L01	303A-1
	206B-10		160C-6	32120-88L00	303A-5
	206C-10		160D-6	32160-88L00	303A-6
	206D-10		160E-6	32800-88L01	310A-1
	206E-10	29404-93J10	315A-12	32890-88L00	310A-3
25311-88L00	206A-11		337A-2	33220-64L10	303A-8
	206B-11		337B-2	33410-87L00	310A-7
	206C-11		337C-2	33634-96J00	322A-4
	206D-11				322B-4
	206E-11				322C-4
25311-94510	210A-7				322D-4
	210B-7				322E-4
25700-88L00	407A-20			33799-97E00	340A-8
	407B-20				340B-8
	407C-22	30000		33810-88L10	322A-1
	407D-22				322B-1
	407E-22				322C-1
25700-99E00	407F-32	31100-94J22	301A-1		322D-1
	407G-32	31111-87J10	340A-9		322E-1
29103-93J00	315C-12		340B-9	33833-91J00	444A-78
	315C-18	31123-97E10	340A-4		444B-79
	315D-12		340B-4		444C-81
	315D-18	31131-94J00	301A-2	33834-88L00	444A-76
29116-93J00	401A-15	31133-94900	340A-5		444B-77
	401B-15		340B-5		444C-78
	401C-15	31135-90J00	301A-3		570A-78
29116-93J10	160F-12	31135-94900	340A-6		570B-79

PART NO.	FIG.NO.-REF.NO.	PART NO.	FIG.NO.-REF.NO.	PART NO.	FIG.NO.-REF.NO.
33925-88L10	326A-10		600B-3		501B-12
	326B-7		600C-2		501C-12
	326C-10		600D-2	34500-93J00	501A-14-1
	326D-10	34190-87D00	501A-26		501B-14-1
	326E-10		501B-24		501C-14-1
	326F-10		501C-24	34500-93J11	501A-14-2
	326G-7	34190-88L00	600A-17		501B-14-2
	326H-7		600B-17		501C-14-2
	326J-10		600C-6	34600-93J00	501A-8-1
	326K-10		600D-6		501B-8-1
	326L-10	34190-95500	501A-24		501C-8-1
33940-88L80	326E-9		501B-22	34600-93J11	501A-8-2
	326G-6		501C-22		501B-8-2
33940-88L90	326F-9	34191-92E00	501A-5		501C-8-2
	326H-6		501A-17	34650-93J20	501A-16-1
33940-88LA0	326A-9		501B-5		501B-16-1
	326B-6		501B-17		501C-16-1
33940-88LB0	326C-9		501C-5	34650-93J31	501A-16-2
33940-88LC0	326D-9		501C-17		501B-16-2
33940-88LD0	326K-9	34193-96L00	600A-4		501C-16-2
33940-88LE0	326L-9		600B-4	34660-90J02	507A-1
33940-88LF0	326J-9		600C-3	34800-93J00	501A-1-1
34000-96L42	600A-1		600D-3		501B-1-1
	600B-1	34200-87L00	444A-45		501C-1-1
34011-96L12	600A-2		444B-45	34800-93J11	501A-1-2
	600B-2		444C-45		501B-1-2
	600C-1		570A-44		501C-1-2
	600D-1		570B-44	34825-96L00	600A-6
34100-93J00	501A-3-1	34200-93J00	501A-20-1		600B-6
	501B-3-1		501B-20-1		600C-5
	501C-3-1		501C-20-1		600D-5
34100-93J11	501A-3-2	34200-93J12	501A-20-2	34830-87J20	315A-1
	501B-3-2		501B-20-2		315B-1
	501C-3-2		501C-20-2		315C-1
34100-93J20	501A-3-3	34200-93J40	501A-22-1		315D-1
	501B-3-3	34200-93J51	501A-22-2	34840-98J03	315A-2
	501C-3-3	34211-96L00	600A-5	34840-98J11	315C-2
34100-93J31	501A-3-4		600B-5		315D-2
	501B-3-4		600C-4	34841-87L10	315C-5
	501C-3-4		600D-4		315D-5
34100-93J40	501A-3-5	34300-93J00	501A-10-1	34841-88L00	315A-10
	501B-3-5		501B-10-1	34842-88L10	315C-6
	501C-3-5		501C-10-1		315D-6
34100-93J51	501A-3-6	34300-93J11	501A-10-2	34843-87L00	315C-7
	501B-3-6		501B-10-2		315D-7
	501C-3-6		501C-10-2	34845-88L01	315A-11
34100-93J60	501A-3-7	34310-92E00	501A-11	34845-88L10	315C-8
	501B-3-7		501B-11		315D-8
	501C-3-7		501C-11	34846-87L00	315C-4
34112-96L00	600A-3	34360-92E00	501A-12		315D-4

PART NO.	FIG.NO.-REF.NO.
36001-88L00	600A-11
	600B-11
36610-88LF1	322B-3
36610-88LG1	322A-3
36610-88LH1	322C-3
36610-88LJ0	322E-3
36610-88LK0	322D-3
36611-88L00	322C-17
	322D-17
36612-96J00	322A-15
	322B-15
	322C-15
	322D-15
	322E-15
36615-96300	501A-7
	501B-7
	501C-7
	600A-8
	600B-8
36617-88L00	315C-11
	315D-11
	322A-21
	322B-21
	322C-22
	322D-22
	322E-21
36617-88L20	322A-25
	322B-25
	322C-26
	322D-26
	322E-25
36617-88L90	444A-46
	444B-46
	444C-46
	570A-45
	570B-45
36617-93J10	322A-22
	322B-22
	322C-23
	322D-23
	322E-22
36618-43410	322A-16
	322B-16
	322C-16
	322D-16
	322E-16
36620-88L10	444A-5
	444B-5
	444C-5
	570A-4

PART NO.	FIG.NO.-REF.NO.
	570B-4
36620-93J02	521A-4-1
	521B-2-1
	521C-2-1
36620-93J10	521A-1-1
36620-93J30	521A-2
36620-93J40	521A-1-2
36620-93J52	521A-4-2
	521B-2-2
	521C-2-2
36620-93J62	521A-4-3
	521B-2-3
	521C-2-3
36628-92E00	508A-3
36630-92E00	521B-7
	521C-7
36646-93J01	508A-2
36656-88L00	315A-8
	315C-15
	315D-15
36656-88L10	315B-3
36660-94480	521B-8
	521C-8
36661-96L10	600A-7
	600B-7
36662-88L00	600A-21
	600B-21
	600C-10
	600D-10
36662-88L10	600A-12
	600A-18
	600B-12
	600B-18
	600C-7
	600D-7
36662-88L20	600A-19
	600B-19
	600C-8
	600D-8
36662-88L30	600A-20
	600B-20
	600C-9
	600D-9
36663-88L00	600A-13
	600A-23
	600B-13
	600B-23
	600C-12
	600D-12
36663-98J00	600A-26

PART NO.	FIG.NO.-REF.NO.
	600B-26
	600C-15
	600D-15
36663-98J10	600A-9
	600A-28
	600B-9
	600B-28
	600C-17
	600D-17
36664-88L00	600A-14
	600A-30
	600B-14
	600B-30
	600C-19
	600D-19
36665-88L00	600A-15
	600A-24
	600B-15
	600B-24
	600C-13
	600D-13
36665-88L10	600A-16
	600A-25
	600B-16
	600B-25
	600C-14
	600D-14
36667-96L20	521A-8
	521B-6
	521C-6
36668-87L00	322A-5
	322B-5
	322C-5
	322D-5
	322E-5
36682-92E00	521A-7
	521B-5
	521C-5
36721-96J00	322A-8
	322B-8
	322C-8
	322D-8
	322E-8
36737-96J00	322A-7
	322B-7
	322C-7
	322D-7
	322E-7
36738-88L00	322A-9
	322B-9

PART NO.	FIG.NO.-REF.NO.
	322C-9
	322D-9
	322E-9
36894-87D00	336D-6
	336E-6
	336F-6
	336G-6
	336H-6
	336J-6
	336K-6
	336L-6
36894-95201	336A-6
	336B-6
	336C-6
36895-87D01	336A-7
	336A-8
	336B-7
	336B-8
	336C-7
	336C-8
	336D-7
	336D-8
	336E-7
	336E-8
	336F-7
	336F-8
	336G-7
	336G-8
	336H-7
	336H-8
	336J-7
	336J-8
	336K-7
	336K-8
	336L-7
	336L-8
36990-87D00	521A-6
	521B-4
	521C-4
37100-96J00	530A-1
37100-96J25	530A-19
37110-87L01	444A-6
	444B-6
	444C-6
	570A-5
	570B-5
37110-93J01	530A-2
	530A-20
37110-93J11	508A-4
37112-88L91	444A-47

PART NO.	FIG.NO.-REF.NO.
	444B-47
	444C-47
	570A-46
	570B-46
37139-99E00	530A-6
37139-99E40	530A-24
37141-99E00	444A-7-1
	444B-7-1
	444C-7-1
	508A-5-1
	530A-3-1
	530A-21-1
	570A-6-1
	570B-6-1
37141-99E10	444A-7-2
	444B-7-2
	444C-7-2
	508A-5-2
	530A-3-2
	530A-21-2
	570A-6-2
	570B-6-2
37141-99E20	444A-7-3
	444B-7-3
	444C-7-3
	508A-5-3
	530A-3-3
	530A-21-3
	570A-6-3
	570B-6-3
37141-99E30	444A-7-4
	444B-7-4
	444C-7-4
	508A-5-4
	530A-3-4
	530A-21-4
	570A-6-4
	570B-6-4
37141-99E40	444A-7-5
	444B-7-5
	444C-7-5
	508A-5-5
	530A-3-5
	530A-21-5
	570A-6-5
	570B-6-5
37141-99E50	444A-7-6
	444B-7-6
	444C-7-6
	508A-5-6

PART NO.	FIG.NO.-REF.NO.
	530A-3-6
	530A-21-6
	570A-6-6
	570B-6-6
37141-99E60	444A-7-7
	444B-7-7
	444C-7-7
	508A-5-7
	530A-3-7
	530A-21-7
	570A-6-7
	570B-6-7
37141-99E70	444A-7-8
	444B-7-8
	444C-7-8
	508A-5-8
	530A-3-8
	530A-21-8
	570A-6-8
	570B-6-8
37141-99E80	444A-7-9
	444B-7-9
	444C-7-9
	508A-5-9
	530A-3-9
	530A-21-9
	570A-6-9
	570B-6-9
37141-99E90	444A-7-10
	444B-7-10
	444C-7-10
	508A-5-10
	530A-3-10
	530A-21-10
	570A-6-10
	570B-6-10
37141-99EA0	444A-7-11
	444B-7-11
	444C-7-11
	508A-5-11
	530A-3-11
	530A-21-11
	570A-6-11
	570B-6-11
37141-99EB0	444A-7-12
	444B-7-12
	444C-7-12
	508A-5-12
	530A-3-12
	530A-21-12

PART NO.	FIG.NO.-REF.NO.	PART NO.	FIG.NO.-REF.NO.	PART NO.	FIG.NO.-REF.NO.
	570A-6-12		570B-9		444B-15
	570B-6-12	37820-93J04	508A-9		444C-15
37143-99E00	444A-8	37820-93J10	530A-10		570A-14
	444B-8		530A-25		570B-14
	444C-8	37820-99E02	315A-6	37852-88L90	444B-50
	508A-6		315B-2		444C-50
	530A-4		315C-10		570A-49
	530A-22		315D-10		570B-49
	570A-7	37823-92E01	444A-11	37853-88L90	444A-34
	570B-7		444B-11		444B-35
37149-93J00	444A-9		444C-11		444C-35
	444B-9		508A-10		570A-34
	444C-9		530A-11		570B-34
	508A-7		530A-26	37854-88L90	444A-58
	530A-5		570A-10		444B-59
	530A-23		570B-10		444C-59
	570A-8	37825-99E10	530A-13		570A-72
	570B-8	37826-92J00	444A-12		570B-73
37210-93J00	530A-17		444B-12	37855-88L90	444A-57
37212-93J00	530A-18		444C-12		444B-58
37721-88L00	545A-11		508A-11		444C-58
37721-93J00	326A-1		570A-11		570A-71
	326B-1		570B-11		570B-72
	326C-1	37826-92J10	530A-12	37855-99E00	530A-16
	326D-1		530A-27	37856-92J00	326A-12
	326E-1	37835-95D00	444A-48		326C-12
	326F-1		444B-48		326D-12
	326G-1		444C-48		326E-12
	326H-1		570A-47		326F-12
	326J-1		570B-47		326J-12
	326K-1	37850-87L01	444B-14		326K-12
	326L-1		444C-14		326L-12
37721-93J91	508A-8		570A-13	37857-92J00	326A-13
37725-88L00	326A-3		570B-13		326C-13
	326B-3	37850-88L00	544A-4		326D-13
	326C-3	37850-90J06	508A-12		326E-13
	326D-3	37850-92J00	326A-11		326F-13
	326E-3		326C-11		326J-13
	326F-3		326D-11		326K-13
	326G-3		326E-11		326L-13
	326H-3		326F-11	37859-90J00	508A-51
	326J-3		326J-11	37860-87L00	530A-31
	326K-3		326K-11	37861-87L11	444A-50
	326L-3		326L-11		444B-51
37803-93J05	530A-9	37851-88L90	444A-49		444C-51
37805-93J00	530A-15		444B-49		570A-50
37820-87L01	444A-10		444C-49		570B-50
	444B-10		570A-48	37862-87L00	530A-32
	444C-10		570B-48	37864-88L91	444A-51
	570A-9	37852-87J00	444A-14		444B-52

PART NO.	FIG.NO.-REF.NO.	PART NO.	FIG.NO.-REF.NO.	PART NO.	FIG.NO.-REF.NO.
	444C-52				336F-25
	570A-51				336G-21
	570B-51	40000			336H-25
38100-88L11	337A-3				336J-21
	337B-3				336K-25
	337C-3	41111-88L11-Y5S	335D-1-2		336L-21
	340A-1	41111-88L11-YAY	335D-1-1	41226-97E00	336A-19
	340B-1		335F-1		336B-15
38410-93J12	326A-6		335G-1		336C-15
	326C-6	41111-88L20-Y5S	335A-1-2	41230-97E10	336A-24
	326D-6	41111-88L20-YAY	335A-1-1		336B-20
	326E-6		335C-1		336C-20
	326F-6		335E-1	41231-88L01	336D-27
	326J-6	41111-89J21-YAY	335B-1		336E-27
	326K-6	41121-88L01-Y5S	335D-2-2		336F-27
	326L-6	41121-88L01-YAY	335D-2-1		336G-23
38415-93J00	326A-7		335F-2		336H-27
	326C-7		335G-2		336J-23
	326D-7	41121-88L10-Y5S	335A-2-2		336K-27
	326E-7	41121-88L10-YAY	335A-2-1		336L-23
	326F-7		335C-2	41234-88L00	336D-28
	326J-7		335E-2		336E-28
	326K-7	41121-89J15-YAY	335B-2		336F-28
	326L-7	41130-87J11	335A-3		336G-24
38500-93J00	521A-3		335B-3		336H-28
	521B-1		335C-3		336J-24
	521C-1		335E-3		336K-28
38500-93J90	444A-13	41130-88L10	335D-3		336L-24
	444B-13		335F-3	41270-89J10	336A-20
	444C-13		335G-3		336B-16
	508A-13	41135-93J00	335A-15		336C-16
	530A-7		335B-15	41280-88L10	336D-24
	530A-29		335C-15		336E-24
	570A-12		335D-4		336F-24
	570B-12		335E-15		336G-20
38860-76F01	322A-10		335F-4		336H-24
	322A-11		335G-4		336J-20
	322B-10	41161-94400	442A-1		336K-24
	322B-11		575A-2		336L-20
	322C-10		575B-2	41280-89J04	336A-21
	322C-11	41221-88L00	336D-23		336B-17
	322D-10		336E-23		336C-17
	322D-11		336F-23	43111-88L21-Y5S	336A-1-4
	322E-10		336G-19	43111-88L21-YAY	336A-1-3
	322E-11		336H-23		336B-1
39950-88L02	600A-22		336J-19		336C-1
	600B-22		336K-23	43111-88L31-Y5S	336A-1-2
	600C-11		336L-19	43111-88L31-YAY	336A-1-1
	600D-11	41224-88L00	336D-25	43111-88L40-Y5S	336D-1-4
			336E-25		336E-1-4

PART NO.	FIG.NO.-REF.NO.	PART NO.	FIG.NO.-REF.NO.	PART NO.	FIG.NO.-REF.NO.
	336F-1-2		336J-2		336G-4
43111-88L40-YAY	336D-1-3		336K-2		336K-4-2
	336E-1-3		336L-2		336L-4-2
	336F-1-1	43241-87J00	335B-16	43750-88L32-Y5S	336A-4-2
	336G-1		335E-16		336D-4-2
	336K-1-2	43411-88L00	336B-22		336E-4-2
	336L-1-2		336C-22	43750-88L32-YAY	336A-4-1
43111-88L50-Y5S	336D-1-2		570A-82		336D-4-1
	336E-1-2	43415-88L00	336B-23		336E-4-1
43111-88L50-YAY	336D-1-1		336C-23		336H-4
	336E-1-1		570A-83		336J-4
	336H-1	43512-88L00	336B-24		336K-4-1
	336J-1		336C-24		336L-4-1
	336K-1-1		570A-84	43755-88L00	336A-11
	336L-1-1	43513-88L00	336B-25		336D-19
43112-99E00	180A-12		336C-25		336E-19
	180B-12		570A-85		336F-19
	180C-12	43514-88L00	336B-26		336H-19
43114-88L00	336D-14		336C-26		336K-19
	336E-14		570A-86	43761-88L01-YAY	444A-1
	336F-14	43515-88L00	336B-27		444B-1
	336G-14		336C-27		444C-1
	336H-14		570A-87		570A-58
	336J-14	43516-88L00	336B-28		570B-58
	336K-14		336C-28	43762-88L00	444A-74
	336L-14		570A-88		444B-75
43119-88L00	336D-11	43517-88L00	336B-29		444C-76
	336E-11		336C-29		570A-59
	336F-11		570A-89		570B-59
	336G-11	43711-89J10	336A-3	43768-88L00	444A-75
	336H-11		336B-3		444B-76
	336J-11		336C-3		444C-77
	336K-11	43711-97E01	336D-3		570A-60
	336L-11		336E-3		570B-60
43119-88L10	336D-12		336F-3	43770-99E03	444C-74
	336E-12		336G-3		570B-69
	336F-12		336H-3	45260-89J00	339A-1
	336G-12		336J-3	45421-89J00	335A-4
	336H-12		336K-3		335B-4
	336J-12		336L-3		335C-4
	336K-12	43750-88L22-Y5S	336A-4-4		335E-4
	336L-12		336D-4-4	45731-96312	336A-22
43211-87J00	336A-2		336E-4-4		336B-18
	336B-2		336F-4-2		336C-18
	336C-2	43750-88L22-YAY	336A-4-3		336D-29
43211-88L00	336D-2		336B-4		336E-29
	336E-2		336C-4		336F-29
	336F-2		336D-4-3		336G-25
	336G-2		336E-4-3		336H-29
	336H-2		336F-4-1		336J-25

PART NO.	FIG.NO.-REF.NO.	PART NO.	FIG.NO.-REF.NO.	PART NO.	FIG.NO.-REF.NO.
	336K-29	48571-88L00	337A-12	52111-88L10-YAY	405A-1-3
	336L-25		337B-12		405B-1
47225-87J00	337A-19		337C-11		405C-1-3
47225-88L00	337B-19	48572-87L00	337A-13		405D-1
	337C-17		337B-13		405E-1
47225-89J00	339A-2		337C-12		405F-1-1
47226-89J00	339A-3	48582-97E01	337A-14	52111-88L20-YAY	405G-1
47400-87J32	339A-4		337B-14		405H-1-1
48000-88L15	337A-1	48583-87J10	337A-15		405J-1-1
	337B-1		337B-15	52111-88L30-YAY	405H-1-2
48000-88L20	337C-1		337C-13		405J-1-2
48121-88L00	337B-20	48611-88L00	337A-16	52131-88L00-Y5S	405C-7-2
48121-88L10	337C-18		337B-16		405F-7-2
48121-89J10	337A-20		337C-14	52131-88L00-YAY	405C-7-1
	339A-5	48681-87J11	337A-17		405D-7
48320-87J10	337A-4		337B-17		405E-7
	337B-4		337C-15		405F-7-1
	337C-4	48862-87J20	337A-18	52131-88L11-YAY	405G-7
48321-89J11	337A-21		337B-18		405H-7
	337B-21		337C-16		405J-7
	339A-6			54114-90J10	401A-20
48321-89J20	337C-19				401B-20
48325-89J00	337A-22	50000			401C-20
	337B-22			54120-88L00	401C-17
	339A-7			54121-88L00	401A-23
48325-89J10	337C-20	51110-88L10-Y5S	401A-1-2		401B-23
48326-87J00	337A-23	51110-88L10-YAY	401A-1-1	54123-88L00	401A-24
	337B-23		401B-1		401B-24
	337C-21		401C-1	54124-88L20	401A-17
48326-89J00	339A-8	51122-88L00	401A-8		401B-17
48330-87J10	337A-5		401B-8	54130-88L00	401A-18
	337B-5		401C-8		401B-18
48330-87J20	337C-5	51123-88L00	401A-9		401C-18
48510-97E00	337A-6		401B-9	54137-88L00	401A-12
	337B-6		401C-9		401B-12
48510-97E10	337C-6		585A-10		401C-12
48541-87J10	337A-7	51170-88L00	401A-14	54151-88L00	405A-8
	337B-7		401B-14		405B-8
48541-87J20	337A-8		401C-14		405C-12
	337B-8	51211-88L00	401A-2		405D-12
	337C-7		401B-2		405E-12
48551-88L00	337A-9		401C-2		405F-12
	337B-9		585A-9		405G-14
48551-88L10	337C-8	52111-88L00-Y5S	405A-1-2		405H-15
48553-88L00	337A-10		405C-1-2		405J-15
	337B-10	52111-88L00-YAY	405A-1-1	54160-88L10	405A-9
	337C-9		405C-1-1		405B-9
48557-87J10	337A-11	52111-88L10-Y5S	405A-1-4		405C-13
	337B-11		405C-1-4		405D-13
	337C-10		405F-1-2		405E-13

PART NO.	FIG.NO.-REF.NO.
	405F-13
	405G-15
	405H-16
	405J-16
54166-95J02	401A-19
	401B-19
	401C-19
	405A-12
	405B-12
	405C-16
	405D-16
	405E-16
	405F-16
	405G-18
	405H-19
	405J-19
54167-87L01	405A-10
	405B-10
	405C-14
	405D-14
	405E-14
	405F-14
	405G-16
	405H-17
	405J-17
54180-88L00	405A-11
	405B-11
	405C-15
	405D-15
	405E-15
	405F-15
	405G-17
	405H-18
	405J-18
54211-87J30-Y5S	405A-7-2
	405C-11-2
	405F-11-2
54211-87J30-YAY	405A-7-1
	405B-7
	405C-11-1
	405D-11
	405E-11
	405F-11-1
	405G-13
	405H-14
	405J-14
54221-88L20-Y5S	405A-4-2
	405C-4-2
	405F-4-2
54221-88L20-YAY	405A-4-1

PART NO.	FIG.NO.-REF.NO.
	405B-4
	405C-4-1
	405D-4
	405E-4
	405F-4-1
	405G-4
	405H-4
	405J-4
54231-88L10-Y5S	405A-5-2
	405C-5-2
	405F-5-2
54231-88L10-YAY	405A-5-1
	405B-5
	405C-5-1
	405D-5
	405E-5
	405F-5-1
	405G-5
	405H-5
	405J-5
55100-87J50-Y5S	407A-1-2
	407C-1-2
	407E-1-2
55100-87J50-YAY	407A-1-1
	407B-1
	407C-1-1
	407D-1
	407E-1-1
55110-90J15-YAY	407F-1
	407G-1
55122-88L00	220A-29
	220B-29
	220C-29
	220D-29
	220E-29
	220F-29
55125-90J01	407F-3
	407G-3
55125-94400	407A-4
	407B-4
	407C-4
	407D-4
	407E-4
55127-87D00	143A-36
	143B-36
	407F-4
	407G-4
55181-95200	407A-17
	407B-17
	407C-19

PART NO.	FIG.NO.-REF.NO.
	407D-19
	407E-19
	407F-28
	407G-28
55300-95500	407A-18
	407B-18
	407C-20
	407D-20
	407E-20
	407F-27
	407G-27
55320-94900	335D-11
	335F-11
55321-87J01	111A-7-1
	111B-7-1
	111C-7-1
	111D-7-1
	113A-8
	335A-6
	335B-6
	335C-6
	335E-6
	335G-11
	337A-26
	337B-26
	337C-24
	339A-9
	405G-11
	405H-12
	405J-12
55321-87J11	111A-7-2
	111B-7-2
	111C-7-2
	111D-7-2
	160F-22
	160G-22
	160H-21
	407A-19
	407B-19
	407C-21
	407D-21
	407E-21
55321-90J01	407F-5
	407G-5
55332-87D11	407F-6
	407G-6
55333-87D10	407F-7
	407G-7
56120-90J02-YAY	220G-19
	220H-19

PART NO.	FIG.NO.-REF.NO.
56120-94321-Y5S	220A-20-2
	220C-20-2
	220D-20-2
	220F-20-2
56120-94321-YAY	220A-20-1
	220B-20
	220C-20-1
	220D-20-1
	220E-20
	220F-20-1
56123-90J00	220G-20
	220H-20
56130-87E00	220G-27
	220H-27
56130-87J11-Y5S	220A-26-2
	220C-26-2
	220D-26-2
	220F-26-2
56130-87J11-YAY	220A-26-1
	220B-26
	220C-26-1
	220D-26-1
	220E-26
	220F-26-1
56145-99E01	407F-29
	407G-29
57110-88L02	220A-1-1
	220C-1-1
	220D-1-1
57110-88L12	220A-1-2
	220B-1
	220C-1-2
	220D-1-2
	220E-1-1
	220F-1-1
57110-88L22	220D-1-3
	220E-1-2
	220F-1-2
57110-88L30	220G-1
	220H-1-1
57110-88L40	220H-1-2
57130-94301	405C-10
	405D-10
	405E-10
	405F-10
	405H-11
	405J-11
57133-88L01	220A-2
	220B-2
	220C-2

PART NO.	FIG.NO.-REF.NO.
	220D-2
	220E-2
	220F-2
57133-90J02	220G-2
	220H-2
57133-94400	220A-3
	220B-3
	220C-3
	220D-3
	220E-3
	220F-3
57300-88810	220A-6
	220B-6
	220D-6
	220E-6
	220F-6
57300-88820	220C-6
57300-99824	220G-4
	220H-4
57610-88L10	220G-11
	220H-11
57610-94402	220A-13
	220B-13
	220C-13
	220D-13
	220E-13
	220F-13
57621-87J03	220A-14
	220B-14
	220C-14
	220D-14
	220E-14
	220F-14
57621-88L00	220G-12
	220H-12
57630-90J00	407F-26
	407G-26
57630-94301	407A-16
	407B-16
	407C-18
	407D-18
	407E-18
57631-95303	220A-19
	220B-19
	220C-19
	220D-19
	220E-19
	220F-19
57631-99E01	220G-14
	220H-14

PART NO.	FIG.NO.-REF.NO.
57632-95320	407A-11
	407B-11
	407C-13
	407D-13
	407E-13
57633-90J02	407F-21
	407G-21
57633-94301	407A-12
	407B-12
	407C-14
	407D-14
	407E-14
57634-88L00	220A-16
	220B-16
	220C-16
	220D-16
	220E-16
	220F-16
57635-90J01	407F-22
	407G-22
58100-87LA0-019	407F-19-1
	407G-19-1
58100-87LB0-019	407F-19-2
	407G-19-2
58100-87LC0-019	407F-19-3
	407G-19-3
58100-87LG1-019	407F-19-6
	407G-19-6
58100-87LH0-019	407F-19-5
	407G-19-5
58100-87LJ0-019	407F-19-4
	407G-19-4
58100-88L03-019	407A-9-1
	407B-9-1
	407C-11-1
	407D-11-1
	407E-11-1
58100-88L13-019	407A-9-2
	407B-9-2
	407C-11-2
	407D-11-2
	407E-11-2
58100-88L23-019	407A-9-3
	407B-9-3
	407C-11-3
	407D-11-3
	407E-11-3
58100-88L52-019	407A-9-6
	407B-9-6
	407C-11-6

PART NO.	FIG.NO.-REF.NO.
	407D-11-6
	407E-11-6
58100-88L62-019	407A-9-7
	407B-9-7
	407C-11-7
	407D-11-7
	407E-11-7
58100-88L72-019	407A-9-8
	407B-9-8
	407C-11-8
	407D-11-8
	407E-11-8
58100-88L83-019	407A-9-9
	407B-9-9
	407C-11-9
	407D-11-9
	407E-11-9
58100-88LA0-019	407A-9-4
	407B-9-4
	407C-11-4
	407D-11-4
	407E-11-4
58100-88LB0-019	407A-9-5
	407B-9-5
	407C-11-5
	407D-11-5
	407E-11-5
58105-90J00	407F-20
	407G-20
58120-88L01	407A-10
	407B-10
	407C-12
	407D-12
	407E-12
58200-88L30	407A-9-10
	407B-9-10
	407C-11-10
	407D-11-10
	407E-11-10
60000	
61112-88L10	410A-1
	410B-1
	410C-1
	410D-1
	410E-1

PART NO.	FIG.NO.-REF.NO.
	410F-1
	410G-1
61124-88L10	410A-24
	410B-24
	410C-24
	410D-24
	410E-24
	410F-24
	410G-24
61134-88L10	410A-2
	410B-2
	410C-2
	410D-2
	410E-2
	410F-2
	410G-2
61151-88L00	410A-6
	410B-6
	410C-6
	410D-6
	410E-6
	410F-6
	410G-6
61188-88L00	432A-11
61400-88820-YAY	420A-1-1
	420B-1
	420C-1-1
	420D-1-1
	420E-1
	420F-1-1
	420G-1-1
	420H-1
	420J-1
61400-88830-Y5S	420A-1-2
	420C-1-2
	420D-1-2
	420F-1-2
	420G-1-2
61412-88L00	410A-11
	410B-11
	410C-11
	410D-11
	410E-11
	410F-11
	410G-11
61422-88L30	420A-12-1
	420B-12
	420C-12-1
61422-88L40	420D-12-1
	420E-12

PART NO.	FIG.NO.-REF.NO.
61422-88L50	420F-12-1
	420G-12-1
	420H-12
	420J-12
61422-88L60	420A-12-2
	420C-12-2
61422-88L70	420D-12-2
61422-88L80	420F-12-2
	420G-12-2
61431-88L10-Y5S	420A-2-2
	420C-2-2
	420D-2-2
	420F-2-2
	420G-2-2
61431-88L10-YAY	420A-2-1
	420B-2
	420C-2-1
	420D-2-1
	420E-2
	420F-2-1
	420G-2-1
	420H-2
	420J-2
61435-88L60	420A-13-1
	420B-13
	420C-13-1
61435-88L70	420D-13-1
	420E-13
61435-88L80	420F-13-1
	420G-13-1
	420H-13
	420J-13
61435-88L90	420A-13-2
	420C-13-2
61435-88LA0	420D-13-2
61435-88LB0	420F-13-2
	420G-13-2
61438-88L00	420A-3
	420B-3
	420C-3
	420D-3
	420E-3
	420F-3
	420G-3
	420H-3
	420J-3
61439-88L00	420A-4
	420B-4
	420C-4
	420D-4

PART NO.	FIG.NO.-REF.NO.
	420E-4
	420F-4
	420G-4
	420H-4
	420J-4
61443-88L20	420A-9-1
	420B-9
	420C-9-1
	420D-9-1
	420E-9
	420F-9-1
	420G-9-1
	420H-9
	420J-9
61443-88L30	420A-9-2
	420C-9-2
	420D-9-2
	420F-9-2
	420G-9-2
61453-88L20	420A-10-1
	420B-10
	420C-10-1
	420D-10-1
	420E-10
	420F-10-1
	420G-10-1
	420H-10
	420J-10
61453-88L30	420A-10-2
	420C-10-2
	420D-10-2
	420F-10-2
	420G-10-2
61458-90J00	420A-14
	420B-14
	420C-14
	420D-14
	420E-14
	420F-14
	420G-14
	420H-14
	420J-14
61472-88L00	136A-10
61476-88L00	420A-6
	420B-6
	420C-6
	420D-6
	420E-6
	420F-6
	420G-6

PART NO.	FIG.NO.-REF.NO.
	420H-6
	420J-6
61494-88L01	136A-12
61610-95J00	420A-7
	420B-7
	420C-7
	420D-7
	420E-7
	420F-7
	420G-7
	420H-7
	420J-7
61632-93J00	410A-13
	410B-13
	410C-13
	410D-13
	410E-13
	410F-13
	410G-13
61633-88L00	410A-16
	410B-16
	410C-16
	410D-16
	410E-16
	410F-16
	410G-16
61641-88L00	410A-14
	410B-14
	410C-14
	410D-14
	410E-14
	410F-14
	410G-14
61673-93J11	410A-22
	410B-22
	410C-22
	410D-22
	410E-22
	410F-22
	410G-22
61811-88L20-Y5S	410A-3-4
	410D-3-2
	410E-3-4
61811-88L20-YAY	410A-3-3
	410B-3
	410C-3
	410D-3-1
	410E-3-3
	410G-3-2
61811-88L30-Y5S	410A-3-2

PART NO.	FIG.NO.-REF.NO.
	410E-3-2
61811-88L30-YAY	410A-3-1
	410E-3-1
	410F-3
	410G-3-1
61821-88L20-Y5S	410A-4-4
	410D-4-2
	410E-4-4
61821-88L20-YAY	410A-4-3
	410B-4
	410C-4
	410D-4-1
	410E-4-3
	410G-4-2
61821-88L30-Y5S	410A-4-2
	410E-4-2
61821-88L30-YAY	410A-4-1
	410E-4-1
	410F-4
	410G-4-1
61831-88L10-Y5S	410A-7-2
	410D-7-2
	410E-7-2
61831-88L10-YAY	410A-7-1
	410B-7
	410C-7
	410D-7-1
	410E-7-1
	410F-7
	410G-7
63002-88L12-YAY	570B-1
63002-88L22-YAY	570A-1
63110-88L22-YAY	444B-2
	444C-2
63110-88L31-YAY	444A-2
63111-88L00-YAY	444A-63
	444B-64
	444C-64
	570A-77
	570B-78
63115-88L00	444A-68
	444B-69
	444C-69
	570A-65
	570B-65
63121-88L00	444A-15
	444B-16
	444C-16
	570A-15
	570B-15

PART NO.	FIG.NO.-REF.NO.
63132-88L00	444A-73
	444B-74
	444C-75
	570A-69
	570B-70
63210-88L00	444A-16
	444B-17
	444C-17
	570A-16
	570B-16
63215-93110	444A-71
	444B-72
	444C-72
	570A-67
	570B-67
63221-88L00	444A-17
	444B-18
	444C-18
	570A-17
	570B-17
63223-92D00	444A-18
	444B-19
	444C-19
	570A-18
	570B-18
63225-88L00	444A-19
	444B-20
	444C-20
	570A-19
	570B-19
63227-93200	444A-20
	444B-21
	444C-21
	570A-20
	570B-20
63235-88L00	444A-21
	444B-22
	444C-22
	570A-21
	570B-21
63244-99J00	444A-52
	444B-53
	444C-53
	570A-52
	570B-52
63245-99J00	444A-53
	444B-54
	444C-54
	570A-53
	570B-53

PART NO.	FIG.NO.-REF.NO.
63246-88L00	444A-22
	444B-23
	444C-23
	570A-22
	570B-22
63247-99J00	444A-62
	444B-63
	444C-63
	570A-76
	570B-77
63248-99J00	444A-30
	444B-31
	444C-31
	570A-30
	570B-30
63250-88L00	444A-23
	444B-24
	444C-24
	570A-23
	570B-23
63251-87J00	444A-24
	444B-25
	444C-25
	570A-24
	570B-24
63251-88L90	444A-56
	444B-57
	444C-57
	570A-70
	570B-71
63258-88L00	444A-59
	444B-60
	444C-60
	570A-73
	570B-74
63260-88L00	444A-25
	444B-26
	444C-26
	570A-25
	570B-25
63261-87J00	444A-31
	444B-32
	444C-32
	570A-31
	570B-31
63262-87J00	444A-28
	444B-29
	444C-29
	570A-28
	570B-28

PART NO.	FIG.NO.-REF.NO.
63271-87J00	444A-29
	444B-30
	444C-30
	570A-29
	570B-29
63272-87J00	444A-26
	444B-27
	444C-27
	570A-26
	570B-26
63273-87J00	444A-27
	444B-28
	444C-28
	570A-27
	570B-27
63274-87J00	444A-32
	444B-33
	444C-33
	570A-32
	570B-32
63610-88L00	444A-33
	444B-34
	444C-34
	570A-33
	570B-33
63611-88L00	444A-43
	444B-43
	444C-43
	570A-42
	570B-42
63612-87J00	444A-44
	444B-44
	444C-44
	570A-43
	570B-43
63612-88L10	444A-54
	444B-55
	444C-55
	570A-54
	570B-54
63626-88L00	444A-35
	444B-36
	444C-36
	570A-35
	570B-35
65000-95D01	432A-1
65520-95D01	432A-2
65561-95D00	432A-3
65700-90J15	432A-8
65740-95D01	432A-7

PART NO.	FIG.NO.-REF.NO.
65750-95500	432A-9
65770-90J12	432A-10
65793-88L00	444A-77
	444B-78
	444C-79
	570A-79
	570B-80
65831-95D00	432A-4
65890-95D00	432A-5
65892-95D00	432A-6
67200-88L00	544A-1
	545A-1
67200-93J51	508A-1
67211-88L00	544A-17
67212-88L00	544A-7
67212-95600	508A-14
67220-95630	508A-16
67221-92E00	545A-8
67222-92E00	545A-2
67223-92E00	545A-3
67223-99E10	508A-17
67224-92E00	545A-9
67226-92E00	545A-15
67226-92E10	545A-16
67227-92E00	545A-24
67228-92E00	545A-18
67229-95600	508A-18
67230-88L00	545A-20
67231-88L00	545A-32
67232-88L00	545A-33
67232-95600	508A-19
67233-92E00	545A-26
67234-88L00	545A-22
67235-92E00	545A-27
67236-92E00	545A-12
67237-92E01	545A-28
67238-87D00	508A-20
67238-88L00	545A-31
67239-92E00	545A-35
67239-92E10	545A-41
67240-92E00	545A-17
67241-88L00	545A-34
67241-99E10	508A-21
67243-92E00	545A-38
67243-95600	508A-22
67244-95600	508A-23
67245-92E00	545A-23
67245-95600	508A-24
67246-88L00	545A-36
67251-99E20	508A-25

PART NO.	FIG.NO.-REF.NO.
67252-88L00	545A-39
67252-95600	508A-26
67253-88L00	545A-40
67253-92E00	544A-13
67253-95600	508A-27
67255-99E10	508A-28
67256-95600	508A-29
67257-88L00	544A-9
67257-99E10	508A-30
67258-99E00	508A-31
67259-87D00	508A-32
67261-88L00	544A-3
67261-88L10	544A-2
67261-99E10	508A-33
67263-88L00	444A-36
67264-88L00	544A-18
67264-88L10	544A-19
67264-95600	508A-35
67267-93J00	508A-36
67269-92E00	545A-29
67271-88L10	544A-16
67272-88L00	545A-6
67273-88L00	544A-24
	545A-47
67273-95600	508A-37
	544A-15
67274-88L00	545A-42
67275-95600	508A-38
	544A-14
67281-88L00	544A-10
67282-94L00	508A-52
67284-94L00	508A-53
67286-92E00	545A-19
67287-92E00	545A-46
67288-92E00	545A-4
67288-92E20	544A-6
67288-92E60	544A-12
67291-92E00	545A-7
67291-92E10	545A-37
67292-87J00	444A-37
	444B-37
	444C-37
	570A-36
	570B-36
67292-94300	508A-39
	545A-5
67294-95600	508A-40
67296-88D10	545A-13
	545A-30
67296-88L00	544A-5

PART NO.	FIG.NO.-REF.NO.
67296-90J10	508A-41
67296-92E11	508A-15
67296-92E20	545A-14
67296-92E30	545A-44
67296-92E60	544A-11
67296-94300	508A-42
67296-94310	508A-34
67296-95600	508A-43
67296-95610	508A-44
	545A-43
67297-95600	508A-45
67320-93J00	508A-54-1
	515A-1-1
	515B-1-1
67320-93J10	508A-54-2
	515A-1-2
	515B-1-2
67320-93J20	508A-54-3
	515A-1-3
	515B-1-3
67320-93J30	508A-54-4
	515A-1-4
	515B-1-4
67320-93J40	508A-54-5
	515A-1-5
	515B-1-5
67320-93J50	508A-54-6
	515A-1-6
	515B-1-6
67320-93J60	508A-54-7
	515A-1-7
	515B-1-7
67320-93J70	508A-54-8
	515A-1-8
	515B-1-8
67320-93J80	508A-54-9
	515A-1-9
	515B-1-9
67341-88L01	204A-16
	204B-16
	204C-16
	204D-16
	204E-16
	204F-16
	204G-16
67343-88L01	204A-18
	204B-18
	204C-18
	204D-18
	204E-18

PART NO.	FIG.NO.-REF.NO.
	204F-18
	204G-18
67467-89J01	204A-21
	204B-21
	204C-21
	204D-21
	204E-21
	204F-21
	204G-21
67500-88L00	544A-20
67700-93J00	575A-1
	575B-1
67701-87J11	442A-2
	575A-3
	575B-3
67721-87J00	442A-3
	575A-4
	575B-4
67725-99E00	442A-4
	575A-5
	575B-5
67726-99E00	442A-5
	575A-6
	575B-6
67728-99E00	442A-6
	575A-7
	575B-7
68110-88L01	420A-17
	420B-17
	420C-17
	420D-17
	420E-17
	420F-17
	420G-17
	420H-17
	420J-17
68111-18G20	420A-11
	420B-11
	420C-11
	420D-11
	420E-11
	420F-11
	420G-11
	420H-11
	420J-11
68111-88L00	544A-8
69711-93E10	136A-11

PART NO.	FIG.NO.-REF.NO.
70000	
77811-54GB0-0PG	508A-46
90000	
99011-88L70-054	420A-18-1
	420B-18-1
	420C-18
	420D-18-1
	420E-18-1
	420F-18-1
	420H-18-1
99011-88L70-059	420A-18-2
	420B-18-2
	420D-18-2
	420E-18-2
	420F-18-2
	420G-18
	420H-18-2
	420J-18
00000	
01421-08607	124A-4
	124B-4
	124C-4
	124D-4
	124E-4
01547-0616C	124A-12
	124B-12
	124C-12
	124D-12
	124E-12
01547-0625C	111A-18
	111B-18
	111C-18
	111D-18
01547-0640A	175A-3

PART NO.	FIG.NO.-REF.NO.
01547-0645C	111A-19
	111B-19
	111C-19
	111D-19
01550-06127	303A-11
	326A-8
	326C-8
	326D-8
	326E-8
	326F-8
	326J-8
	326K-8
	326L-8
01550-0612A	119A-12
01550-0612C	111A-25
	111B-25
	111C-25
	111D-25
	146A-16
	180A-17
	180B-17
	180C-17
	204A-14
	204B-14
	204C-14
	204D-14
	204E-14
	204F-14
	204G-14
	322A-23
	322B-23
	322C-24
	322D-24
	322E-23
01550-06167	301A-20
01550-0616C	111A-27
	111B-27
	111C-27
	111D-27
	146A-9
	163A-4
	163B-4
	163C-4
	163D-4
	204A-3
	204A-17
	204B-3
	204B-17
	204C-3
	204C-17

PART NO.	FIG.NO.-REF.NO.
	204D-3
	204D-17
	204E-3
	204E-17
	204F-3
	204F-17
	204G-3
	204G-17
	303A-9
01550-0620A	119A-10
01550-0620C	124A-15
	124B-15
	124C-15
	124D-15
	124E-15
	162A-7
	162B-7
	162C-7
	310A-8
01550-0625C	136A-8
	146A-2
	310A-2
01550-0630C	136A-2
	143A-25
	143B-25
	204A-4
	204B-4
	204C-4
	204D-4
	204E-4
	204F-4
	204G-4
	407F-31
	407G-31
01550-0640C	163A-11
	163B-11
	163C-11
	163D-11
01550-0645C	163A-3
	163B-3
	163C-3
	163D-3
01550-0820C	111A-9
	111B-9
	111C-9
	111D-9
	113A-2
	163A-5
	163B-5
	163C-5

PART NO.	FIG.NO.-REF.NO.
	163D-5
01550-0825A	401A-10
	401B-10
	401C-10
01550-0830C	124A-5
	124B-5
	124C-5
	124D-5
	124E-5
	301A-21
01550-08407	113A-6
	124A-6
	124B-6
	124C-6
	124D-6
	124E-6
01550-08457	111A-12
	111B-12
	111C-12
	111D-12
01550-0845A	401A-4
	401B-4
	401C-4
01550-0885A	401A-5
	401B-5
	401C-5
01570-06167	204A-20
	204B-20
	204C-20
	204D-20
	204E-20
	204F-20
	204G-20
01570-0616A	175A-7
02112-0408A	143A-15
02112-06307	303A-12
02112-34167	124A-9
	124B-9
	124C-9
	124D-9
	124E-9
02142-0408B	143A-16
02142-0612A	111A-21
	111B-21
	111C-21
	111D-21
03112-0630B	501A-25
	501B-23
	501C-23
03121-0516A	530A-28

PART NO.	FIG.NO.-REF.NO.
03122-05165	530A-14
03142-04309	160A-17
	160B-17
	160C-17
	160D-17
	160E-17
03522-05169	444A-61
	444B-62
	444C-62
	570A-75
	570B-76
03542-05169	410A-12
	410B-12
	410C-12
	410D-12
	410E-12
	410F-12
	410G-12
03542-06169	420A-5
	420B-5
	420C-5
	420D-5
	420E-5
	420F-5
	420G-5
	420H-5
	420J-5
03542-06209	136A-4
04211-09109	175A-4
04211-13189	111A-13
	111B-13
	111C-13
	111D-13
04221-04089	116A-7
	136A-9
04221-05109	121A-6
07120-06357	144A-5
	144B-5
08113-62090	220G-24
	220H-24
08211-20263	220A-12
	220B-12
	220C-12
	220D-12
	220E-12
	220F-12
08211-35451	220A-10-6
	220B-10-6
	220C-10-6
	220D-10-6

PART NO.	FIG.NO.-REF.NO.	PART NO.	FIG.NO.-REF.NO.	PART NO.	FIG.NO.-REF.NO.
	220E-10-6	09100-08232	508A-47		160E-7
	220F-10-6	09100-08260	119A-5	09108-06144	160A-8
08221-35455	220A-10-1	09100-12091	335A-8-2		160B-8
	220B-10-1		335B-8-2		160C-8
	220C-10-1		335C-8-2		160D-8
	220D-10-1		335D-7-2		160E-8
	220E-10-1		335E-8-2	09108-08254	405C-8
	220F-10-1		335F-7-2		405D-8
08221-35456	220A-10-4		335G-7-2		405E-8
	220B-10-4	09100-12093	335A-8-1		405F-8
	220C-10-4		335B-8-1	09108-10161	336A-12
	220D-10-4		335C-8-1		336D-20
	220E-10-4		335D-7-1		336E-20
	220F-10-4		335E-8-1		336F-20
08310-00067	322A-17		335F-7-1		336H-20
	322B-17		335G-7-1		336K-20
	322C-18	09103-06093	315A-5	09116-05010	410A-23
	322D-18		315C-9		410B-23
	322E-17		315D-9		410C-23
08316-10087	124A-7	09103-06266	111A-3		410D-23
	124B-7		111B-3		410E-23
	124C-7		111C-3		410F-23
	124D-7		111D-3		410G-23
	124E-7	09103-06281	111A-8	09116-06121	162A-3
	322A-2		111B-8		162B-3
	322B-2		111C-8		162C-3
	322C-2		111D-8		180A-8
	322D-2		113A-9		180B-8
	322E-2		335A-7		180C-8
08321-01067	322A-18		335B-7		335D-12
	322B-18		335C-7		335F-12
	322C-19		335E-7	09116-06127	410A-15
	322D-19		335G-12		410B-15
	322E-18		337A-27		410C-15
08331-3115A	206A-12		337B-27		410D-15
	206B-12		337C-25		410E-15
	206C-12		339A-12		410F-15
	206D-12		405G-12		410G-15
	206E-12		405H-13	09116-06202	310A-4
08331-41309	210A-20		405J-13	09116-06236	160A-15
	210B-20	09103-10189	121A-4		160B-15
08331-41329	220A-28	09103-14024	303A-2		160C-15
	220B-28	09106-05030	303A-7		160D-15
	220C-28	09106-10065	335D-13		160E-15
	220D-28		335F-13		160F-14
	220E-28		335G-13		160G-14
	220F-28	09108-06143	160A-7		336A-23
09100-06113	339A-10		160B-7		336B-19
09100-06131	407F-8		160C-7		336C-19
	407G-8		160D-7	09116-06237	336B-30

PART NO.	FIG.NO.-REF.NO.	PART NO.	FIG.NO.-REF.NO.	PART NO.	FIG.NO.-REF.NO.
	336C-30		407G-10		160H-13
	444C-80		444A-72		315C-3
	570A-80		444B-73		315D-3
	570B-81		444C-73	09125-05047	444A-42
09116-08122	220A-25		570A-68		444B-42
	220B-25		570B-68		444C-42
	220C-25	09116-10179	337A-25		570A-41
	220D-25		337B-25		570B-41
	220E-25		337C-23	09125-05048	315A-3
	220F-25		339A-11	09125-05050	336A-10
	220G-26	09116-10181	401A-13		336B-10
	220H-26		401B-13		336C-10
09116-08128	180A-3		401C-13		336D-10
	180B-3		405A-2		336E-10
	180C-3		405A-6		336F-10
09116-08131	405G-8		405B-2		336G-10
	405H-8		405B-6		336H-10
	405J-8		405C-2		336J-10
	407A-8		405C-6		336K-10
	407B-8		405D-2		336L-10
	407C-8		405D-6	09125-05135	544A-21
	407D-8		405E-2	09125-06063	336A-9
	407E-8		405E-6		336B-9
09116-08137	335D-5		405F-2		336C-9
	335F-5		405F-6		336D-9
	335G-5		405G-2		336D-30
	407F-9		405G-6		336E-9
	407G-9		405H-2		336E-30
	444A-64		405H-6		336F-9
	444B-65		405J-2		336F-30
	444C-65		405J-6		336G-9
	570A-61	09117-06031	210A-8		336G-26
	570B-61		210B-8		336H-9
09116-08159	401A-3	09117-08109	407A-5		336H-30
	401B-3		407B-5		336J-9
	401C-3		407C-5		336J-26
09116-08163	410A-8		407D-5		336K-9
	410B-8		407E-5		336K-30
	410C-8	09117-08110	220G-30		336L-9
	410D-8		220H-30		336L-26
	410E-8	09117-10039	407F-11	09125-06067	336D-13
	410F-8		407G-11		336E-13
	410G-8	09125-05042	545A-21		336F-13
09116-10124	180A-13	09125-05046	160A-19		336G-13
	180B-13		160B-19		336H-13
	180C-13		160C-19		336J-13
09116-10150	405G-9		160D-19		336K-13
	405H-9		160E-19		336L-13
	405J-9		160F-13	09126-05003	508A-48
	407F-10		160G-13	09126-06006	545A-25

PART NO.	FIG.NO.-REF.NO.
09126-06015	444A-38
	444B-38
	444C-38
	570A-37
	570B-37
09131-05004	530A-33
09132-04034	160F-17
	160G-17
	160H-16
09136-06148	410A-5-1
	410A-5-2
	410B-5
	410C-5
	410D-5
	410E-5-1
	410E-5-2
	410F-5
	410G-5-1
	410G-5-2
09137-04004	326A-2
	326B-2
	326C-2
	326D-2
	326E-2
	326F-2
	326G-2
	326H-2
	326J-2
	326K-2
	326L-2
09140-05005	163A-9
	163B-9
	163C-9
	163D-9
	544A-23
09140-06020	339A-13
	508A-49
	545A-10
09140-08023-XC0	407C-9
	407D-9
	407E-9
09140-12034	220A-7
	220B-7
	220C-7
	220D-7
	220E-7
	220F-7
09140-14024	220G-5
	220H-5
09141-18005	407A-13

PART NO.	FIG.NO.-REF.NO.
	407B-13
	407C-15
	407D-15
	407E-15
	407F-23
	407G-23
09159-06084	420A-8
	420B-8
	420C-8
	420D-8
	420E-8
	420F-8
	420G-8
	420H-8
	420J-8
09159-08059	336B-31
	336C-31
	570A-90
09159-10050	335A-13
	335B-13
	335C-13
	335E-13
	336A-13
	336D-21
	336E-21
	336F-21
	336H-21
	336K-21
09159-12014	335A-9
	335B-9
	335C-9
	335D-8
	335E-9
	335F-8
	335G-8
	401A-21
	401B-21
	401C-21
	405A-13
	405B-13
	405C-17
	405D-17
	405E-17
	405F-17
	405G-19
	405H-20
	405J-20
	444A-65
	444B-66
	444C-66

PART NO.	FIG.NO.-REF.NO.
	570A-62
	570B-62
09159-22006	335A-10
	335B-10
	335C-10
	335D-6
	335E-10
	335F-6
	335G-6
09160-05024	545A-45
09160-05029	315A-4
	544A-22
09160-06047	163A-10
	163B-10
	163C-10
	163D-10
09160-06055	204A-10
	204A-22
	204B-10
	204B-22
	204C-10
	204C-22
	204D-10
	204D-22
	204E-10
	204E-22
	204F-10
	204F-22
	204G-10
	204G-22
09160-06084	143A-27
	143B-27
09160-06085	407F-12
	407G-12
09160-06094	124A-16
	124B-16
	124C-16
	124D-16
	124E-16
09160-06104	508A-50
09160-08082	407C-10
	407D-10
	407E-10
09160-08122	210A-11
	210B-11
09160-08123	119A-6
09160-09010	210A-10
	210B-10
09160-09015	210A-9
	210B-9

PART NO.	FIG.NO.-REF.NO.
09160-10082	335A-14
	335B-14
	335C-14
	335D-14
	335E-14
	335F-14
	335G-14
09160-10093	121A-5
09160-10139	337A-28
09160-10141	336A-14
	336D-22
	336E-22
	336F-22
	336H-22
	336K-22
09160-12066	335A-5
	335B-5
	335C-5
	335E-5
	444A-66
	444B-67
	444C-67
	570A-63
	570B-63
09160-12110	401A-22
	401B-22
	401C-22
	405A-14
	405B-14
	405C-18
	405D-18
	405E-18
	405F-18
	405G-20
	405H-21
	405J-21
09160-12124	444A-67
	444B-68
	444C-68
	570A-64
	570B-64
09160-12126	335A-12
	335B-12
	335C-12
	335D-9
	335E-12
	335F-9
	335G-9
09160-12128	335A-11
	335B-11

PART NO.	FIG.NO.-REF.NO.
	335C-11
	335D-10
	335E-11
	335F-10
	335G-10
09160-13014	410A-17
	410B-17
	410C-17
	410D-17
	410E-17
	410F-17
	410G-17
09160-14065	303A-3
09160-18028	407A-15
	407B-15
	407C-17
	407D-17
	407E-17
	407F-24
	407G-24
09160-22018	220A-11-1
	220B-11-1
	220C-11-1
	220D-11-1
	220E-11-1
	220F-11-1
09160-22019	220A-11-2
	220B-11-2
	220C-11-2
	220D-11-2
	220E-11-2
	220F-11-2
09160-22020	220A-11-3
	220B-11-3
	220C-11-3
	220D-11-3
	220E-11-3
	220F-11-3
09160-22021	220A-11-4
	220B-11-4
	220C-11-4
	220D-11-4
	220E-11-4
	220F-11-4
09160-22022	220A-11-5
	220B-11-5
	220C-11-5
	220D-11-5
	220E-11-5
	220F-11-5

PART NO.	FIG.NO.-REF.NO.
09160-22023	220A-11-6
	220B-11-6
	220C-11-6
	220D-11-6
	220E-11-6
	220F-11-6
09160-39002	336A-17
	336B-13
	336C-13
	336D-17
	336E-17
	336F-17
	336G-17
	336H-17
	336J-17
	336K-17
	336L-17
09160-39003	336A-15
	336B-11
	336C-11
	336D-15
	336E-15
	336F-15
	336G-15
	336H-15
	336J-15
	336K-15
	336L-15
09161-08011	336B-32
	336C-32
	570A-91
09163-06001	444A-39
	444B-39
	444C-39
	570A-38
	570B-38
09164-13010	444A-69
	444B-70
	444C-70
	570A-66
	570B-66
09164-14008	410A-18
	410B-18
	410C-18
	410D-18
	410E-18
	410F-18
	410G-18
09164-31001	220G-33
	220H-33

PART NO.	FIG.NO.-REF.NO.
09168-10022	407A-7
	407B-7
	407C-7
	407D-7
	407E-7
	407F-13
	407G-13
09168-12012	180A-4
	180B-4
	180C-4
09169-06062	310A-5
09169-06075	143A-26
	143B-26
09169-08039	410A-9
	410B-9
	410C-9
	410D-9
	410E-9
	410F-9
	410G-9
09169-31001	220G-32
	220H-32
09180-06198	144A-6
	144B-6
09181-25030	220G-17
	220H-17
09181-28015	220G-10-1
	220H-10-1
09181-28016	220G-10-2
	220H-10-2
09181-28017	220G-10-3
	220H-10-3
09181-28018	220G-10-4
	220H-10-4
09181-28019	220G-10-5
	220H-10-5
09181-28020	220G-10-6
	220H-10-6
09181-30186	220A-9-1
	220B-9-1
	220C-9-1
	220D-9-1
	220E-9-1
	220F-9-1
09181-30187	220A-9-2
	220B-9-2
	220C-9-2
	220D-9-2
	220E-9-2
	220F-9-2

PART NO.	FIG.NO.-REF.NO.
09181-30188	220A-9-3
	220B-9-3
	220C-9-3
	220D-9-3
	220E-9-3
	220F-9-3
09181-30190	220A-9-4
	220B-9-4
	220C-9-4
	220D-9-4
	220E-9-4
	220F-9-4
09181-30192	220A-9-5
	220B-9-5
	220C-9-5
	220D-9-5
	220E-9-5
	220F-9-5
09181-31001	220G-31
	220H-31
09181-33001	220A-8-2
	220B-8-2
	220C-8-2
	220D-8-2
	220E-8-2
	220F-8-2
09181-33002	220A-8-3
	220B-8-3
	220C-8-3
	220D-8-3
	220E-8-3
	220F-8-3
09181-33003	220A-8-4
	220B-8-4
	220C-8-4
	220D-8-4
	220E-8-4
	220F-8-4
09181-33004	220A-8-5
	220B-8-5
	220C-8-5
	220D-8-5
	220E-8-5
	220F-8-5
09181-33005	220A-8-6
	220B-8-6
	220C-8-6
	220D-8-6
	220E-8-6
	220F-8-6

PART NO.	FIG.NO.-REF.NO.
09181-33006	220A-8-7
	220B-8-7
	220C-8-7
	220D-8-7
	220E-8-7
	220F-8-7
09181-33007	220A-8-8
	220B-8-8
	220C-8-8
	220D-8-8
	220E-8-8
	220F-8-8
09181-33008	220A-8-9
	220B-8-9
	220C-8-9
	220D-8-9
	220E-8-9
	220F-8-9
09181-33009	220A-8-10
	220B-8-10
	220C-8-10
	220D-8-10
	220E-8-10
	220F-8-10
09181-35101	220A-8-1
	220B-8-1
	220C-8-1
	220D-8-1
	220E-8-1
	220F-8-1
09181-35110	220A-8-11
	220B-8-11
	220C-8-11
	220D-8-11
	220E-8-11
	220F-8-11
09181-35131	220A-10-2
	220B-10-2
	220C-10-2
	220D-10-2
	220E-10-2
	220F-10-2
09181-35132	220A-10-3
	220B-10-3
	220C-10-3
	220D-10-3
	220E-10-3
	220F-10-3
09181-35136	220A-10-5
	220B-10-5

PART NO.	FIG.NO.-REF.NO.
	220C-10-5
	220D-10-5
	220E-10-5
	220F-10-5
09181-40186	220G-6-1
	220H-6-1
09181-40190	220G-6-7
	220H-6-7
09181-40195	220G-6-11
	220H-6-11
09181-41002	220G-6-2
	220H-6-2
09181-41003	220G-6-3
	220H-6-3
09181-41004	220G-6-4
	220H-6-4
09181-41005	220G-6-5
	220H-6-5
09181-41006	220G-6-6
	220H-6-6
09181-41008	220G-6-8
	220H-6-8
09181-41009	220G-6-9
	220H-6-9
09181-41010	220G-6-10
	220H-6-10
09181-41012	220G-6-12
	220H-6-12
09181-41013	220G-6-13
	220H-6-13
09181-41014	220G-6-14
	220H-6-14
09181-45003	220G-9-1
	220H-9-1
09181-45004	220G-9-2
	220H-9-2
09181-45005	220G-9-3
	220H-9-3
09181-45006	220G-9-4
	220H-9-4
09181-45007	220G-9-5
	220H-9-5
09181-45008	220G-9-6
	220H-9-6
09181-45009	220G-9-7
	220H-9-7
09181-50020	220G-8-1
	220H-8-1
09181-50021	220G-8-2
	220H-8-2

PART NO.	FIG.NO.-REF.NO.
09181-50022	220G-8-3
	220H-8-3
09181-50023	220G-8-4
	220H-8-4
09181-50024	220G-8-5
	220H-8-5
09181-50025	220G-8-6
	220H-8-6
09181-50026	220G-8-7
	220H-8-7
09181-50027	220G-8-8
	220H-8-8
09181-50028	220G-8-9
	220H-8-9
09181-50029	220G-8-10
	220H-8-10
09202-04022	410A-19
	410B-19
	410C-19
	410D-19
	410E-19
	410F-19
	410G-19
09202-05022	220A-15
	220B-15
	220C-15
	220D-15
	220E-15
	220F-15
09202-06023	405C-9
	405D-9
	405E-9
	405F-9
09202-06025	220A-30
	220B-30
	220C-30
	220D-30
	220E-30
	220F-30
09202-06027	220A-31
	220B-31
	220C-31
	220D-31
	220E-31
	220F-31
09202-06031	160F-15
	160G-15
	160H-14
	405G-10
	405H-10

PART NO.	FIG.NO.-REF.NO.
	405J-10
09202-07002	220G-13
	220H-13
09202-08006	401A-6
	401A-7
	401A-11
	401B-6
	401B-7
	401B-11
	401C-6
	401C-7
	401C-11
	405A-3
	405B-3
	405C-3
	405D-3
	405E-3
	405F-3
	405G-3
	405H-3
	405J-3
	407F-14
	407G-14
09204-03003	407A-14
	407B-14
	407C-16
	407D-16
	407E-16
	407F-25
	407G-25
09205-02004	206A-8
	206B-8
	206C-8
	206D-8
	206E-8
09205-02006	210A-12
	210B-12
09205-02013	206A-6
	206B-6
	206C-6
	206D-6
	206E-6
09205-03019	220A-4
	220B-4
	220C-4
	220D-4
	220E-4
	220F-4
09205-03021	206A-7
	206B-7

PART NO.	FIG.NO.-REF.NO.	PART NO.	FIG.NO.-REF.NO.	PART NO.	FIG.NO.-REF.NO.
	206C-7		220B-21		111D-6
	206D-7		220C-21	09280-26005	146A-3
	206E-7		220D-21	09280-26006	111A-15
	210A-13		220E-21		111B-15
	210B-13		220F-21		111C-15
09205-03051	336A-25	09263-22039	407A-2		111D-15
	336B-21		407B-2		162A-4
	336C-21		407C-2		162B-4
09206-08001	111A-4		407D-2		162C-4
	111B-4		407E-2	09280-46004	220G-28
	111C-4	09263-28016	407F-2		220H-28
	111D-4		407G-2	09280-69001	210A-17
09206-09012	407F-30	09263-28047	220G-21		210B-17
	407G-30		220H-21	09280-75001	220A-24
09206-13019	113A-5	09265-20015	220A-5		220B-24
09209-12007	220G-16		220B-5		220C-24
	220H-16		220C-5		220D-24
09248-10008	407A-6		220D-5		220E-24
	407B-6		220E-5		220F-24
	407C-6		220F-5	09280-97001	220G-22
	407D-6	09265-25046	220G-3		220H-22
	407E-6		220H-3	09282-17005	220A-27
	407F-15	09265-30004	407A-3		220B-27
	407G-15		407B-3		220C-27
09248-12009	180A-5		407C-3		220D-27
	180B-5		407D-3		220E-27
	180C-5		407E-3		220F-27
09250-40002	326B-8	09265-50003	220G-7	09282-17011	401A-16
	326G-8		220H-7		401B-16
	326H-8	09280-08005	206A-3		401C-16
09251-07003	432A-12		206B-3	09282-22007	220G-29
09260-10005	206A-14		206C-3		220H-29
	206B-14		206D-3	09282-28002	220G-23
	206C-14		206E-3		220H-23
	206D-14	09280-08008	210A-15	09282-39001	336A-16
	206E-14		210B-15		336B-12
	210A-14	09280-09008	180A-16		336C-12
	210B-14		180B-16		336D-16
09260-10006	444A-55		180C-16		336E-16
	444B-56	09280-11001	206A-4		336F-16
	444C-56		206B-4		336G-16
	570A-55		206C-4		336H-16
	570B-55		206D-4		336J-16
09262-35070	220A-23		206E-4		336K-16
	220B-23	09280-12008	175A-6		336L-16
	220C-23	09280-15003	210A-16	09283-37005	116A-11
	220D-23		210B-16	09284-08003	210A-18
	220E-23	09280-22019	111A-6		210B-18
	220F-23		111B-6	09289-05012	121A-15
09263-22020	220A-21		111C-6	09289-22007	220A-22

PART NO.	FIG.NO.-REF.NO.	PART NO.	FIG.NO.-REF.NO.	PART NO.	FIG.NO.-REF.NO.
	220B-22		204D-19		507A-5
	220C-22		204E-19	09401-10415	162A-15
	220D-22		204F-19		162B-15
	220E-22		204G-19		162C-15
	220F-22	09355-40805-600	407F-16	09401-11423	146A-6
09306-13007	410A-20		407G-16		146A-18
	410B-20	09359-50901-980	162A-13		432A-14
	410C-20		162B-13	09401-11425	144A-8
	410D-20		162C-13		144B-8
	410E-20	09362-09008	407F-17	09401-15414	111A-23
	410F-20		407G-17		111B-23
	410G-20	09367-06006	507A-4		111C-23
09320-08021	322A-6	09367-08001	432A-13		111D-23
	322B-6	09380-12002	337A-24	09401-25406	162A-9
	322C-6		337B-24		162B-9
	322D-6		337C-22		162C-9
	322E-6		339A-14	09403-07340	315A-7
09320-08062	144A-3	09380-38003	336A-18		315C-13
	144B-3		336B-14		315D-13
09320-08076	143A-32		336C-14	09403-11320	146A-17
	143B-32		336D-18	09403-11321	315C-14
09320-09016	310A-6		336E-18		315D-14
09320-09039	143A-28		336F-18	09403-13408	303A-10
	143B-28		336G-18		315C-17
09320-09501	136A-3		336H-18		315D-17
09320-11013	410A-10		336J-18	09403-17303	111A-24
	410B-10		336K-18		111B-24
	410C-10		336L-18		111C-24
	410D-10	09381-18002	116A-4		111D-24
	410E-10	09385-06012	204A-11	09407-08401	530A-8
	410F-10		204A-23		530A-30
	410G-10		204B-11	09407-10404	326A-4
09343-70503-080	146A-12		204B-23		326B-4
09352-50003-770	143A-29		204C-11		326C-4
	143B-29		204C-23		326D-4
09352-50901-600	410A-21		204D-11		326E-4
	410B-21		204D-23		326F-4
	410C-21		204E-11		326G-4
	410D-21		204E-23		326H-4
	410E-21		204F-11		326J-4
	410F-21		204F-23		326K-4
	410G-21		204G-11		326L-4
09352-50903-600	162A-12		204G-23		407F-18
	162B-12	09387-52001	220G-25		407G-18
	162C-12		220H-25	09407-14403	322A-19
	507A-2	09401-08412	143A-30		322B-19
	507A-3		143B-30		322C-20
09352-70103-600	204A-19	09401-08413	162A-14		322D-20
	204B-19		162B-14		322E-19
	204C-19		162C-14	09407-14407	315A-9

PART NO.	FIG.NO.-REF.NO.
	315C-16
	315D-16
	322A-20
	322B-20
	322C-21
	322D-21
	322E-20
	326A-14
	326C-14
	326D-14
	326E-14
	326F-14
	326J-14
	326K-14
	326L-14
	501A-6
	501A-18
	501B-6
	501B-18
	501C-6
	501C-18
09407-18402	322A-24
	322B-24
	322C-25
	322D-25
	322E-24
09407-25402	410A-25
	410B-25
	410C-25
	410D-25
	410E-25
	410F-25
	410G-25
	507A-7
09408-00043	143A-33
	143B-33
09408-00121	143A-34
	143B-34
09408-00145	143A-35
	143B-35
	146A-19
09408-00174	144A-9
	144B-9
09408-00175	162A-16
	162B-16
	162C-16
09408-00184	326A-5
	326B-5
	326C-5
	326D-5

PART NO.	FIG.NO.-REF.NO.
	326E-5
	326F-5
	326G-5
	326H-5
	326J-5
	326K-5
	326L-5
09409-05312-6GS	432A-15
09420-04006	160A-20
	160B-20
	160C-20
	160D-20
	160E-20
09420-04008	303A-4
09420-04009	160F-16
	160G-16
	160H-15
09440-06037	444A-60
	444B-61
	444C-61
	570A-74
	570B-75
09440-07033	210A-19
	210B-19
09440-07078	206A-15
	206B-15
	206C-15
	206D-15
	206E-15
09440-08043	220A-17
	220B-17
	220C-17
	220D-17
	220E-17
	220F-17
09440-11020	220G-15
	220H-15
09440-12027	444A-40
	444B-40
	444C-40
	570A-39
	570B-39
09440-40002	220A-18
	220B-18
	220C-18
	220D-18
	220E-18
	220F-18
09440-49004	220G-18
	220H-18

PART NO.	FIG.NO.-REF.NO.
09443-10043	336D-31
	336E-31
	336F-31
	336G-27
	336H-31
	336J-27
	336K-31
	336L-27
09471-12028	501A-4
	501B-4
	501C-4
09471-12077	501A-21
	501A-23
	501B-21
	501C-21
09471-12103	501A-9
	501A-13
	501A-15
	501A-19
	501B-9
	501B-13
	501B-15
	501B-19
	501C-9
	501C-13
	501C-15
	501C-19
09471-12108	501A-2
	501B-2
	501C-2
09481-05501	600A-10
	600A-27
	600A-29
	600B-10
	600B-27
	600B-29
	600C-16
	600C-18
	600D-16
	600D-18
09481-10501	521A-5
	521B-3
	521C-3
09481-15501	322A-12
	322B-12
	322C-12
	322D-12
	322E-12
09481-30401	322A-14
	322B-14

PART NO.	FIG.NO.-REF.NO.
	322C-14
	322D-14
	322E-14
09481-30501	322A-13
	322B-13
	322C-13
	322D-13
	322E-13
09482-00446	111A-28
	111B-28
	111C-28
	111D-28
09800-81812	420A-15
	420B-15
	420C-15
	420D-15
	420E-15
	420F-15
	420G-15
	420H-15
	420J-15

SUZUKI **DF40A/50A/60A** PARTS CATALOGUE

SUZUKI MOTOR CORPORATION All rights reserved
No part of this document may be reproduced or transmitted in any form or by any means, electronic or mechanical, for any purpose, without the express written permission of Suzuki Motor Corporation.

SUZUKI MOTOR CORPORATION
Service Material Development Group, Service Engineering Department
300 Takatsuka, Minami, Hamamatsu, Japan

Copyright © SUZUKI MOTOR CORPORATION 2017 All Rights Reserved

SUZUKI MOTOR CORPORATION

PRINTED IN JAPAN

9900B-45397