SUZUKI

PARTS CATALOGUE

DF40A/50A/60A

DF40A/ATH/AQH
DF40AST
DF50A/ATH
DF60A/ATH/AQH
DF50AV/AVTH
DF60AV/AVTH

SUZUKI

Way of Life!

OUTBOARD MOTOR

E01/E40/E34

2015-6

1ST EDITION

PREFACE

When it becomes necessary to replace parts on SUZUKI OUTBOARD MOTORS, always use SUZUKI GENUINE PARTS which have passed a strict inspection which guarantees quality and performance.

This parts catalogue covers the list of all service parts for SUZUKI DF40A/50A/60A production start 2015.

INSTRUCTIONS FOR QUOTING THE CATALOGUE

1. DIMENSIONS

Dimensions of the parts in this catalogue are indicated in unit millimeters.

2. ABBREVIATIONS

Abbreviations used in this catalogue are as follows:

AR	: As required	NT	: Number of teeth
ASSY	: Assembly	OPT	: Optional
E.NO.	: Engine number	OS	: Over size
F.NO.	: Frame number	STD	: Standard
D	: Diameter of material	T	: Thickness
ID	: Inside diameter	US	: Under size
OD	: Outside diameter	W	: Width
L	: Length	W/	: With
LH(PORT)	: Left hand side	S,L,X	: Transom type
RH(STBD)	: Right hand side	SUS	: Stainless steel
～031234	: Up to E.No.06002F-031234	PTT	: Power trim and tilt
031234～	: From E.No.06002F-031234		

12 x 34 x 5.6…… Figures in the description column show the dimensions of parts.
ID OD T(or W,L)

→12345-56781 (Parts No.) : indicates that the parts number was changed to 12345-56781 and the new parts are interchangeable with the former ones but the former ones are not interchangeable with new ones.

←12345-56781 (Parts No.) : indicates that the former and new parts are interchangeable with each other and both are usable.

3. INNER PARTS OF ASSEMBLY

Part name with a dot (.) in front as shown in the description column indicates the component of the assembly also available individually.

4. MODIFICATION NOTICE

A parts bulletin will be sent to you on all occasions when changes in parts occur, including interchangeable modifications between new parts and old ones.

5. NOTE

5-1. There are some different parts from those of production models among spare parts for the administrative reasons and common use of them with other models.

5-2. In respect of rubber hoses and vinyl tubes, please be sure to use them by cutting off according to the length mentioned on parts catalogue or what is actually required on the vehicle.

5-3. Note that the drawings on the illustration page are for ready reference of spare parts number, not to be used as an assembly manual.
When assembling, use "SUZUKI SERVICE MANUAL".

6. MODEL NAME AND ENGINE NUMBER

MODEL	DESTINATION	TYPE	TRANSOM	COLOR	ENGINE No.
DF40ATL	E01	04003F	S, L	0EP, Y5S	04003F-610001～
DF40ATHL	E01	04003F	L	0EP	04003F-610001～
DF40AQHL	E01	04003F	L	0EP	04003F-610001～
DF40AST	E34	04004F	S, L	0EP, Y5S	04004F-610001～
DF50ATL	E01	05003F	S, L	0EP, Y5S	05003F-610001～
DF50ATHL	E01	05003F	L	0EP	05003F-610001～
DF60ATL	E01	06002F	S, L, X	0EP, Y5S	06002F-610001～
DF60ATL	E40	06002F	L, X	0EP, Y5S	06002F-610001～
DF60ATHL	E01, E40	06002F	L, X	0EP	06002F-610001～
DF60AQHL	E01, E40	06002F	L, X	0EP	06002F-610001～
DF50AVT	E01	05004F	S, L	0EP	05004F-610001～
DF50AVTH	E01	05004F	L	0EP	05004F-610001～
DF60AVT	E01	06003F	S, L, X	0EP	06003F-610001～
DF60AVT	E40	06003F	L, X	0EP	06003F-610001～
DF60AVTH	E01, E40	06003F	L, X	0EP	06003F-610001～

MILLIMETER → INCH CONVERSION CHART

	0	1	2	3	4	5	6	7	8	9
00	.000	.039	.079	.118	.157	.197	.236	.276	.315	.354
10	.394	.433	.472	.512	.551	.591	.630	.669	.709	.748
20	.787	.827	.866	.906	.945	.984	1.024	1.063	1.102	1.142
30	1.181	1.220	1.260	1.299	1.339	1.378	1.417	1.457	1.496	1.535
40	1.575	1.614	1.654	1.693	1.732	1.772	1.811	1.850	1.890	1.929
50	1.969	2.008	2.047	2.087	2.126	2.165	2.205	2.214	2.283	2.323
60	2.362	2.402	2.441	2.480	2.520	2.559	2.598	2.638	2.677	2.717
70	2.756	2.795	2.835	2.874	2.913	2.953	2.992	3.031	3.071	3.110
80	3.150	3.189	3.228	3.268	3.307	3.346	3.386	3.425	3.465	3.504
90	3.543	3.583	3.622	3.661	3.701	3.740	3.780	3.819	3.858	3.898

How to read

	0	1	2	3	4
00	…	…	…	…	…
10	…	…	…	…	…
20	…	…	…	0.906	…
30	…	…	…	…	…

23 millimeters equal 0.906 inch

Contents are subject to change without notice or obligation.

FIG.111A

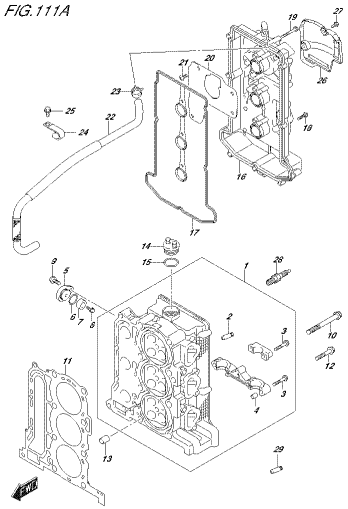

DF8RA_E01_01E_111A
CYLINDER HEAD

FIG.111B

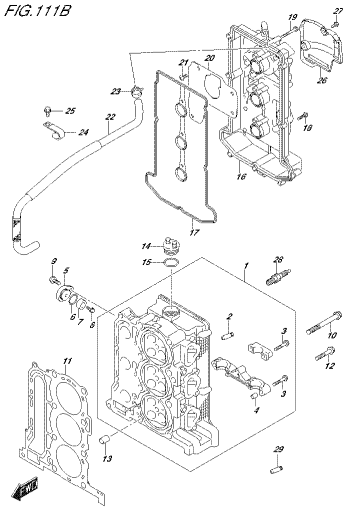

DF8RA_E01_01E_111B
CYLINDER HEAD

FIG.111C

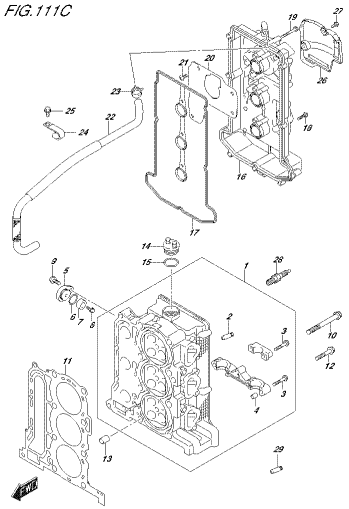

DF8RA_E01_01E_111C
CYLINDER HEAD

FIG.111D

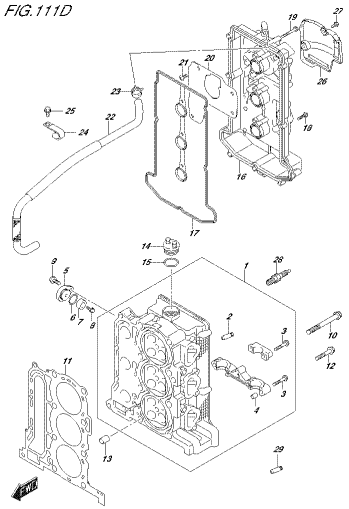

DF8RA_E01_01E_111D
CYLINDER HEAD

FIG.111E

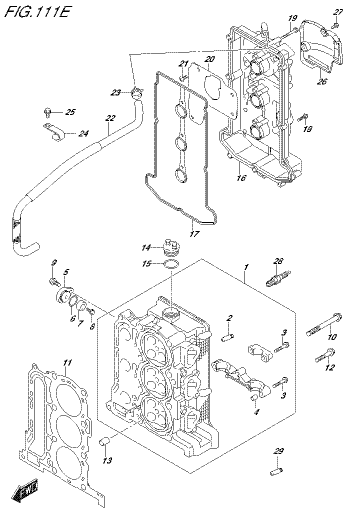

DF8RA_E01_01E_111E
CYLINDER HEAD

FIG.111F

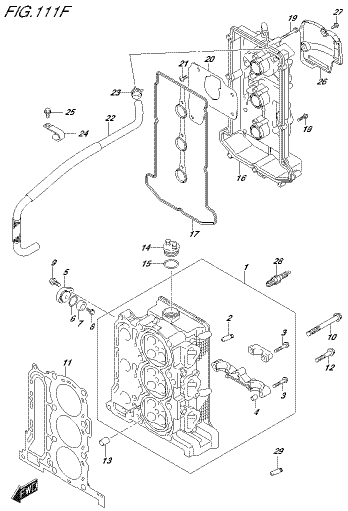

DF8RA_E01_01E_111F
CYLINDER HEAD

FIG.111G

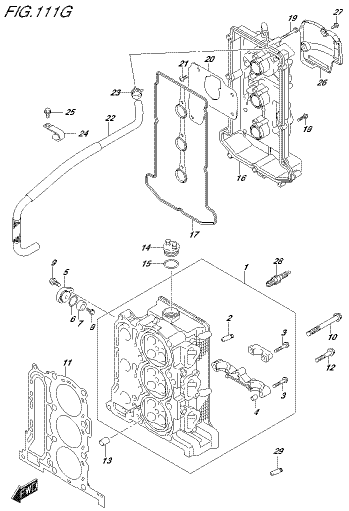

DF8RA_E01_01E_111G
CYLINDER HEAD

FIG.111H

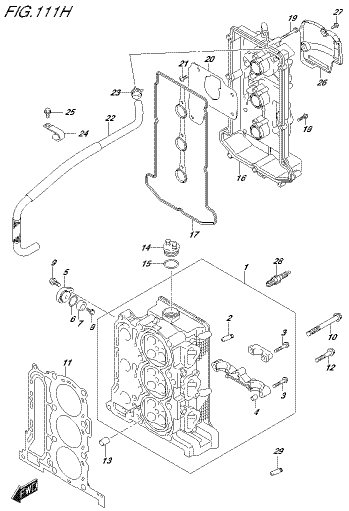

DF8RA_E01_01E_111H
CYLINDER HEAD

FIG.111J

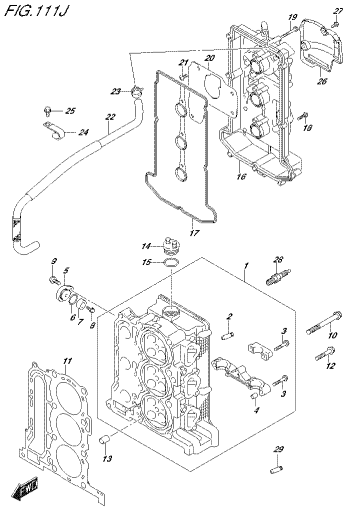

DF80A_E01_016_111J
CYLINDER HEAD

FIG.111K

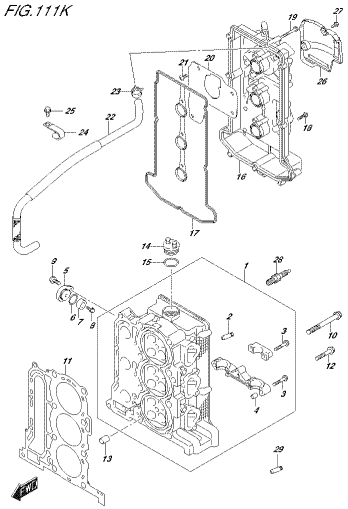

DF80A_E01_016_111K
CYLINDER HEAD

FIG.111L

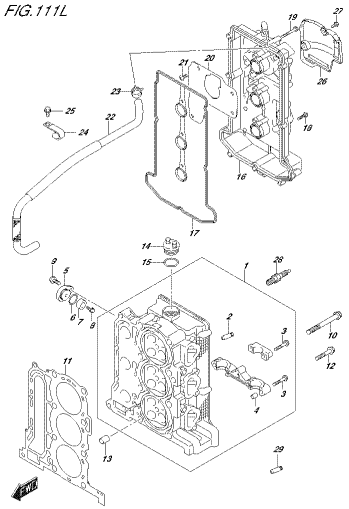

DF80A_E01_016_111L
CYLINDER HEAD

FIG.111M

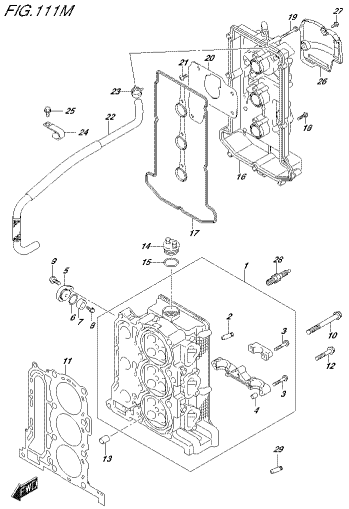

DF80A_E01_016_111M
CYLINDER HEAD

FIG.111N

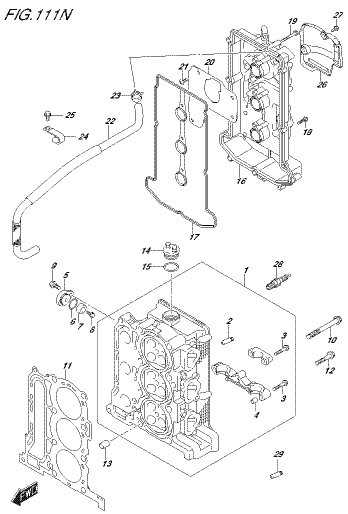

DF80A_E01_016_111N
CYLINDER HEAD

FIG.111P

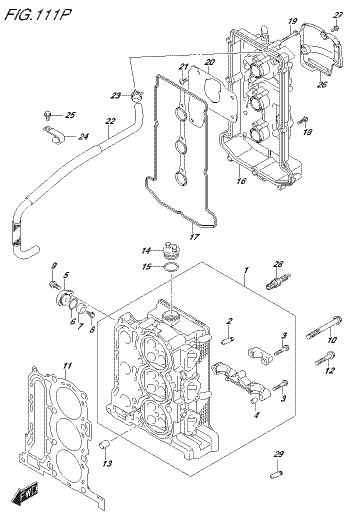

DF80A_E01_016_111P
CYLINDER HEAD

FIG.111R

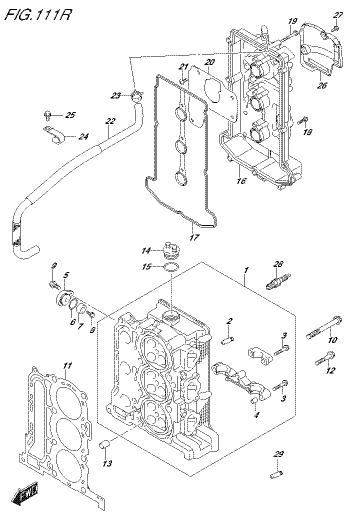

DF80A_E01_016_111R
CYLINDER HEAD

FIG.111S

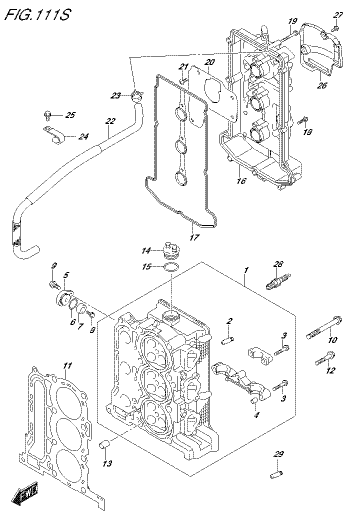

DF80A_E01_016_111S
CYLINDER HEAD

FIG.111T

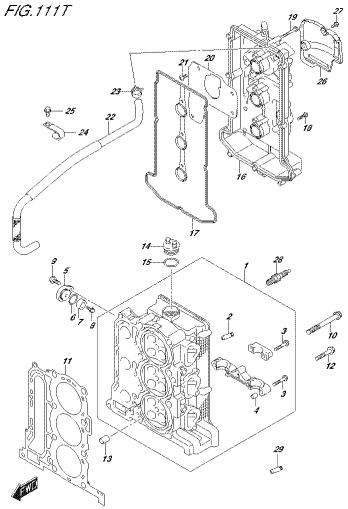

DF90A_E01_01E_111T
CYLINDER HEAD

FIG.111U

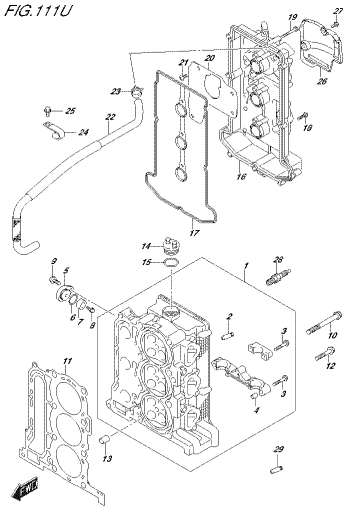

DF90A_E01_01E_111U
CYLINDER HEAD

FIG.113A

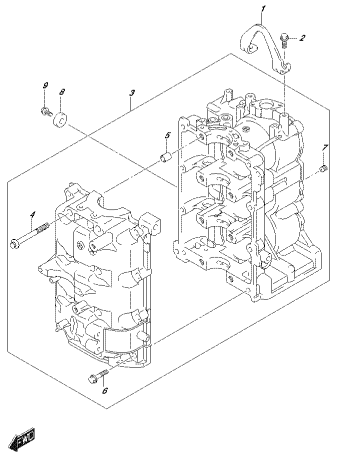

DF90A_E01_01E_113A
CYLINDER BLOCK

FIG.116A

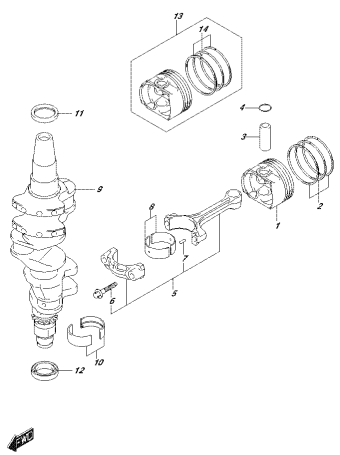

DF90A_E01_01E_116A
CRANKSHAFT

FIG.119A

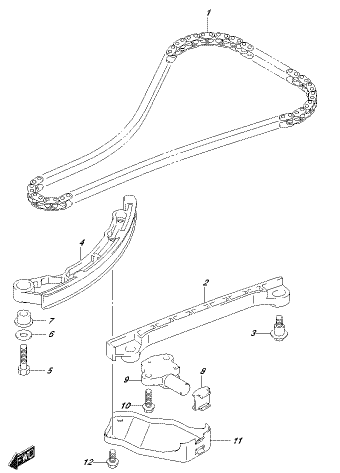

DF90A_E01_01E_119A
TIMING CHAIN

FIG.121A

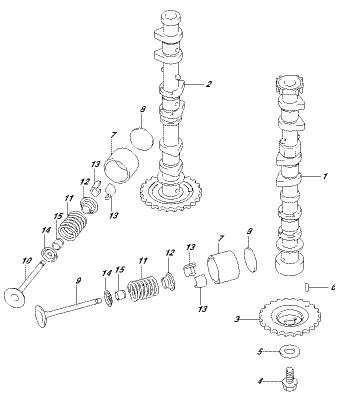

DF90A_E01_01E_121A
CAMSHAFT

FIG.124A

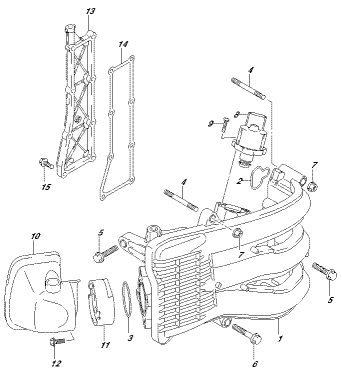

DF90A_E01_01E_124A
INTAKE MANIFOLD/SLEEVE/EXHAUST COVER

FIG.124B

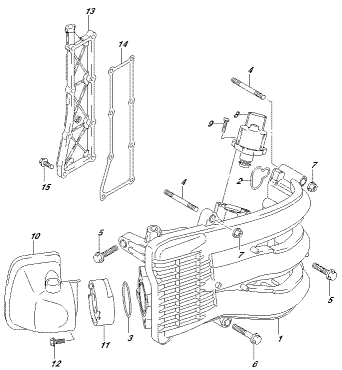

DF90A_E01_01E_124B
INTAKE MANIFOLD/SLEEVE/EXHAUST COVER

FIG.124C

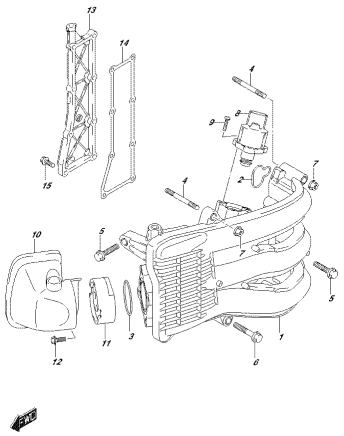

DF80A_E01_016_124C
INTAKE MANIFOLD/SILENCER/EXHAUST COVER

FIG.124D

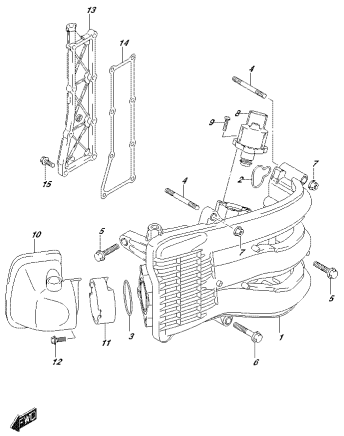

DF80A_E01_016_124D
INTAKE MANIFOLD/SILENCER/EXHAUST COVER

FIG.124E

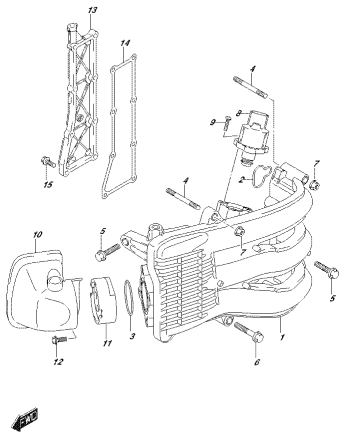

DF80A_E01_016_124E
INTAKE MANIFOLD/SILENCER/EXHAUST COVER

FIG.124F

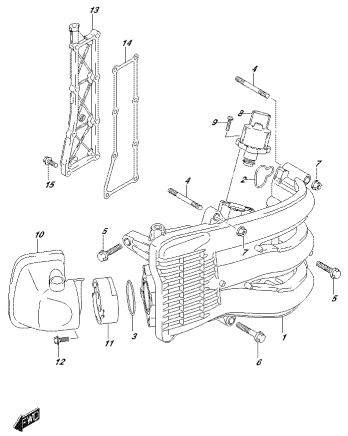

DF80A_E01_016_124F
INTAKE MANIFOLD/SILENCER/EXHAUST COVER

FIG.124G

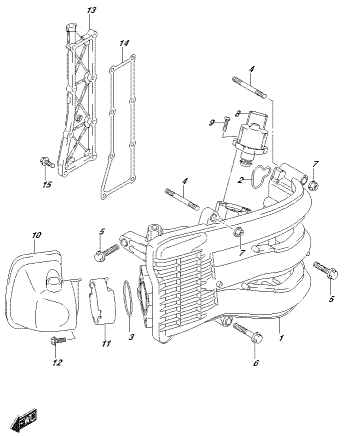

DF80A_E01_016_124G
INTAKE MANIFOLD/SILENCER/EXHAUST COVER

FIG.124H

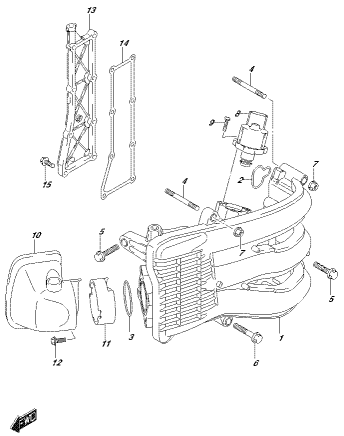

DF80A_E01_016_124H
INTAKE MANIFOLD/SILENCER/EXHAUST COVER

FIG.124J

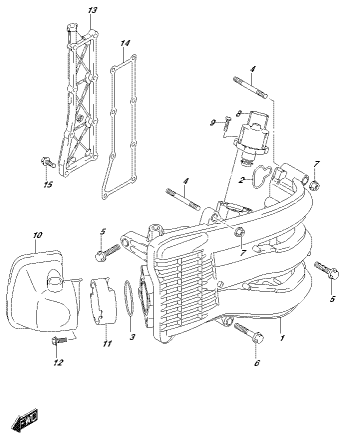

DF80A_E01_016_124J
INTAKE MANIFOLD/SILENCER/EXHAUST COVER

FIG.124K

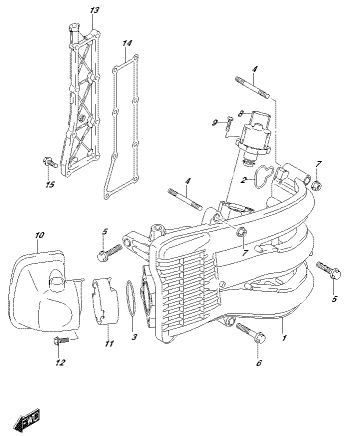

DF80A_E01_016_124K
INTAKE MANIFOLD/SILENCER/EXHAUST COVER

FIG.124L

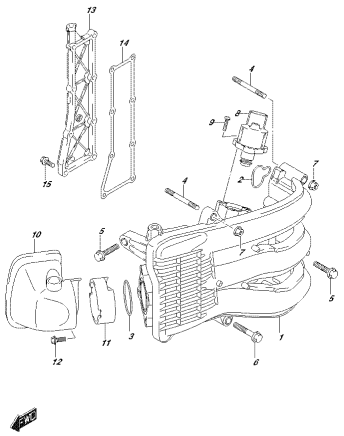

DF60A_E01_016_124L
INTAKE MANIFOLD/SILENCER/EXHAUST COVER

FIG.124M

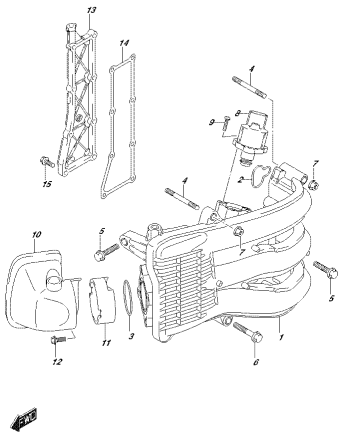

DF60A_E01_016_124M
INTAKE MANIFOLD/SILENCER/EXHAUST COVER

FIG.124N

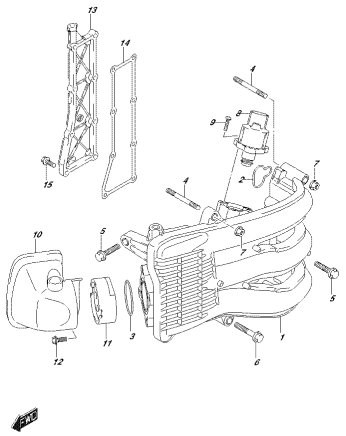

DF60A_E01_016_124N
INTAKE MANIFOLD/SILENCER/EXHAUST COVER

FIG.124P

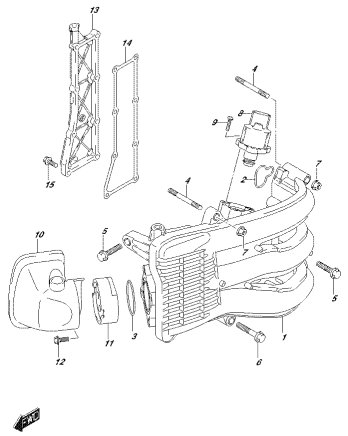

DF60A_E01_016_124P
INTAKE MANIFOLD/SILENCER/EXHAUST COVER

FIG.124R

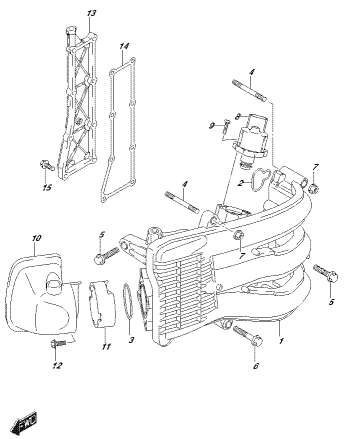

DF60A_E01_016_124R
INTAKE MANIFOLD/SILENCER/EXHAUST COVER

FIG.124S

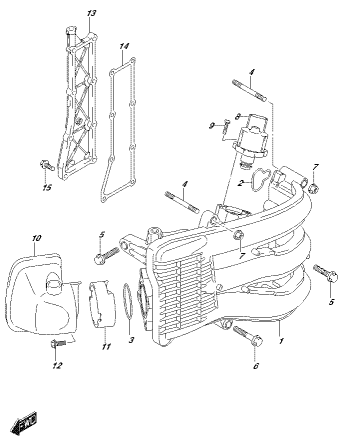

DF60A_E01_016_124S
INTAKE MANIFOLD/SILENCER/EXHAUST COVER

FIG.124T

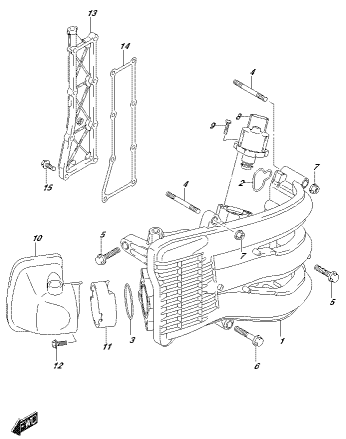

DF60A_E01_016_124T
INTAKE MANIFOLD/SILENCER/EXHAUST COVER

FIG.124U

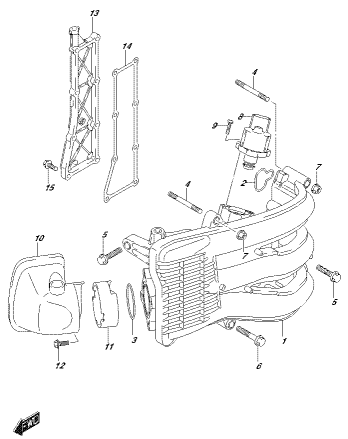

DF60A_E01_016_124U
INTAKE MANIFOLD/SILENCER/EXHAUST COVER

FIG.136A

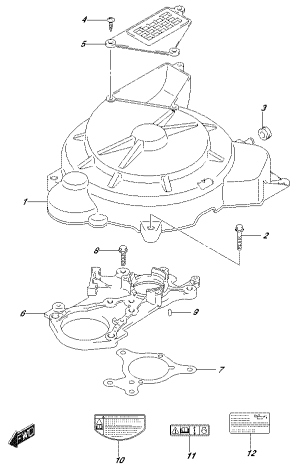

DF90A_E01_016_136A
RING GEAR COVER

FIG.143A

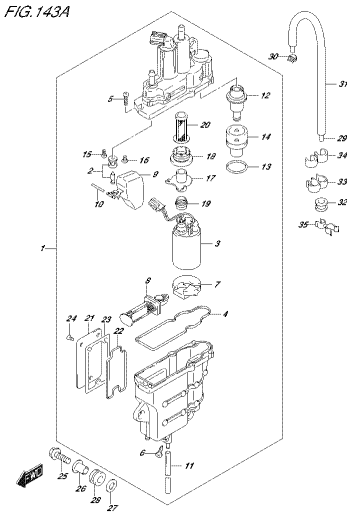

DF90A_E01_016_143A
FUEL VAPOR SEPARATOR

FIG.143B

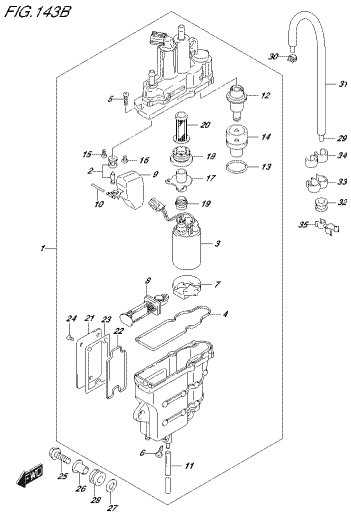

DF90A_E01_016_143B
FUEL VAPOR SEPARATOR

FIG.143C

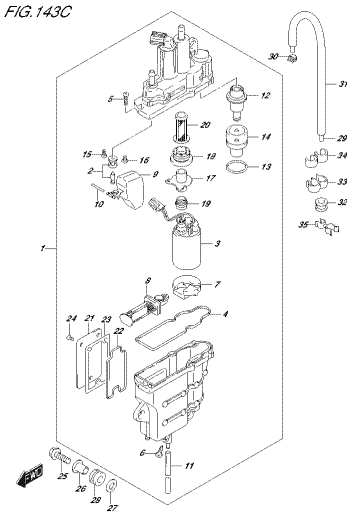

DF90A_E01_016_143C
FUEL VAPOR SEPARATOR

FIG.143D

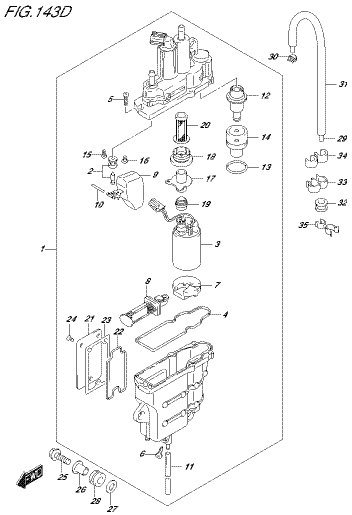

DF90A_E01_016_143D
FUEL VAPOR SEPARATOR

FIG.143E

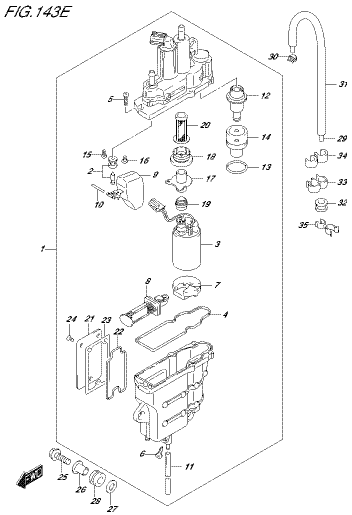

DF90A_E01_016_143E
FUEL VAPOR SEPARATOR

FIG.143F

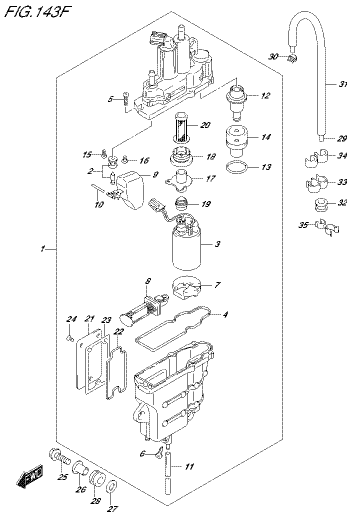

DF90A_E01_016_143F
FUEL VAPOR SEPARATOR

FIG.143G

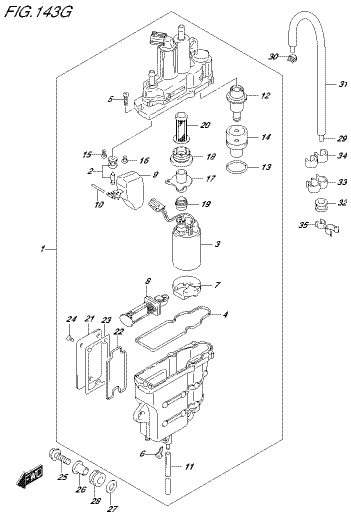

DF90A_E01_016_143G
FUEL VAPOR SEPARATOR

FIG.143H

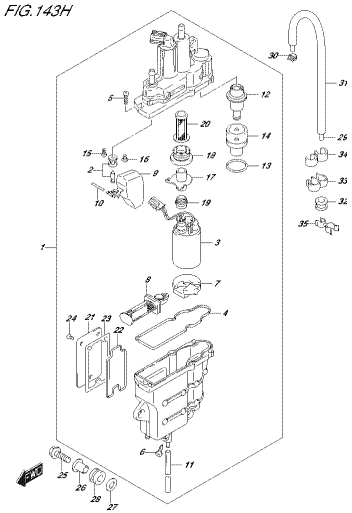

DF90A_E01_01E_143H
FUEL VAPOR SEPARATOR

FIG.143J

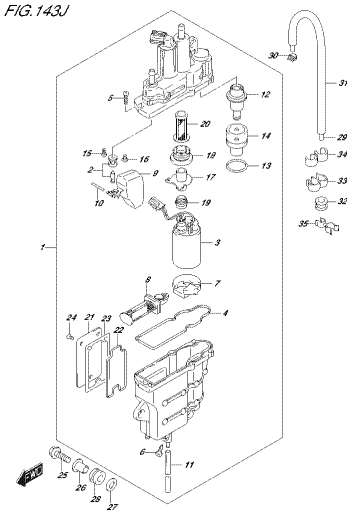

DF90A_E01_01E_143J
FUEL VAPOR SEPARATOR

FIG.143K

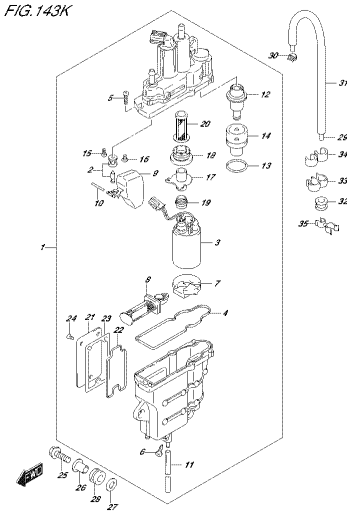

DF90A_E01_01E_143K
FUEL VAPOR SEPARATOR

FIG.143L

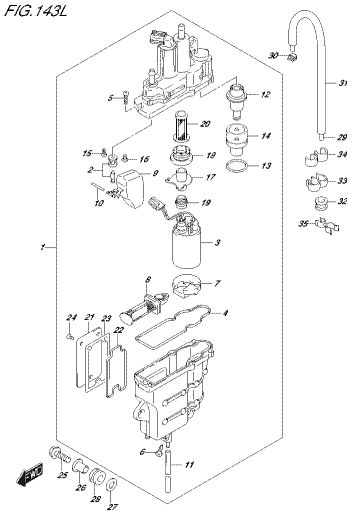

DF90A_E01_01E_143L
FUEL VAPOR SEPARATOR

FIG.143M

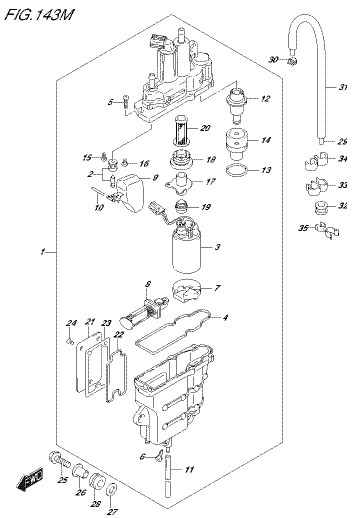

DF90A_E01_01E_143M
FUEL VAPOR SEPARATOR

FIG.143N

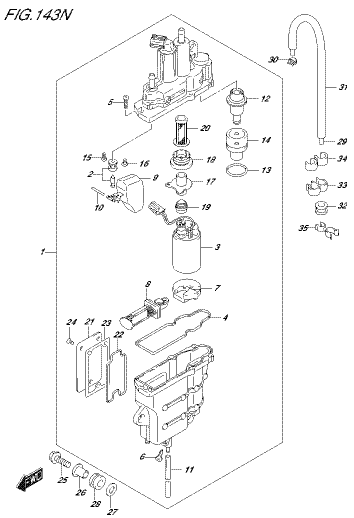

DF90A_E01_01E_143N
FUEL VAPOR SEPARATOR

FIG.143P

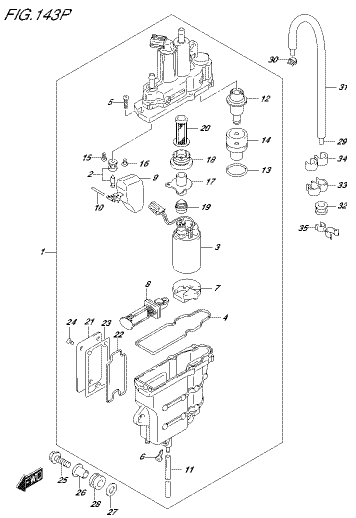

DF90A_E01_01E_143P
FUEL VAPOR SEPARATOR

FIG.143R

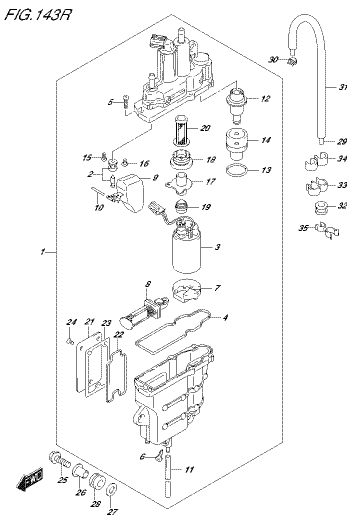

DF90A_E01_01E_143R
FUEL VAPOR SEPARATOR

FIG.143S

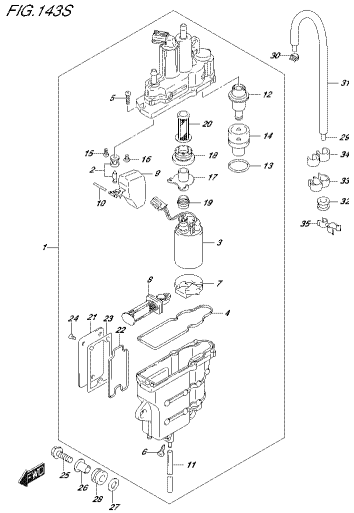

DF8RA_E01_01E_143S
FUEL VAPOR SEPARATOR

FIG.143T

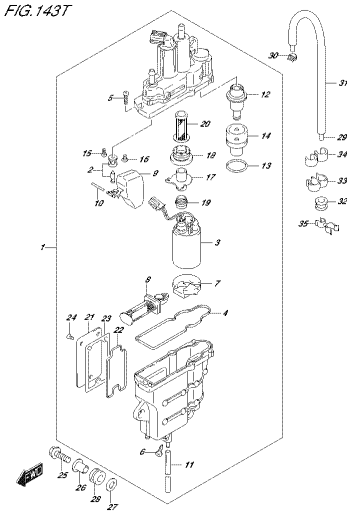

DF8RA_E01_01E_143T
FUEL VAPOR SEPARATOR

FIG.143U

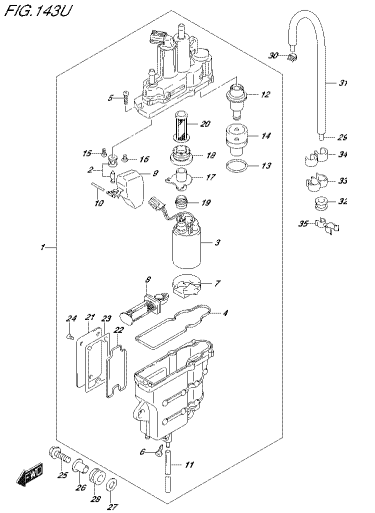

DF8RA_E01_01E_143U
FUEL VAPOR SEPARATOR

FIG.144A

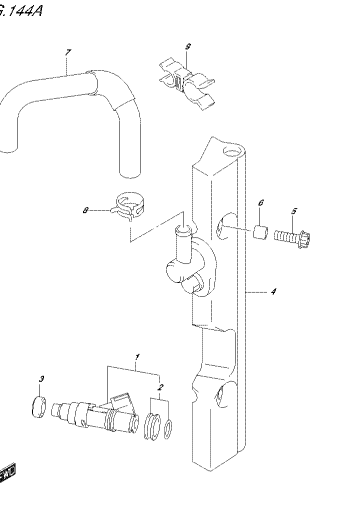

DF8RA_E01_01E_144A
FUEL INJECTOR

FIG.144B

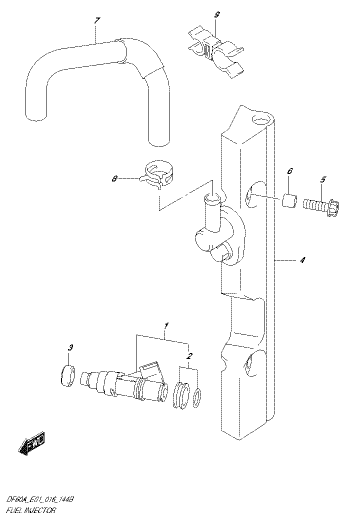

DF8RA_E01_01E_144B
FUEL INJECTOR

FIG.144C

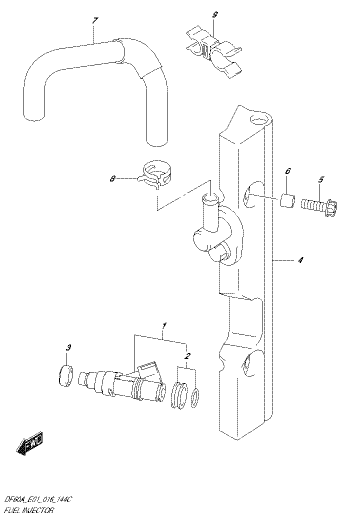

DF8RA_E01_01E_144C
FUEL INJECTOR

FIG.144D

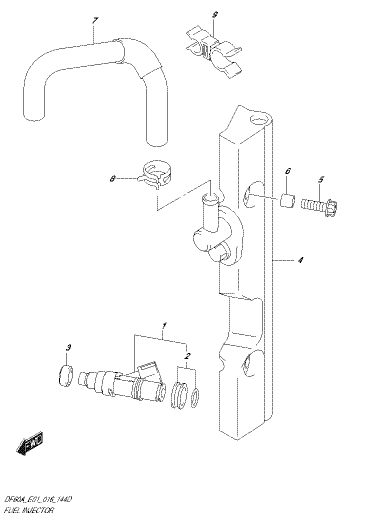

DF8RA_E01_01E_144D
FUEL INJECTOR

FIG.144E

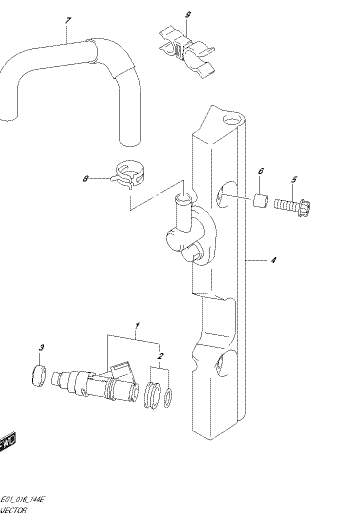

DF8RA_E01_01E_144E
FUEL INJECTOR

FIG.144F

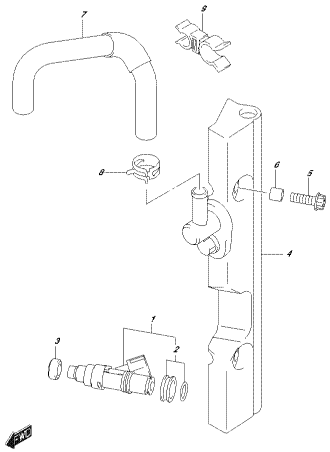

DF80A_E01_016_144F
FUEL INJECTOR

FIG.144G

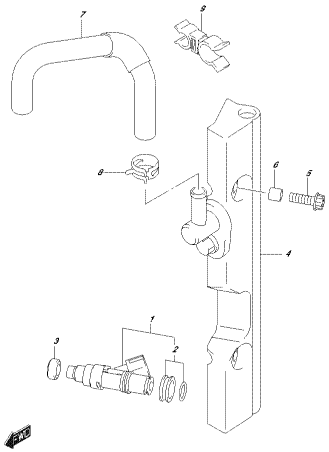

DF80A_E01_016_144G
FUEL INJECTOR

FIG.144H

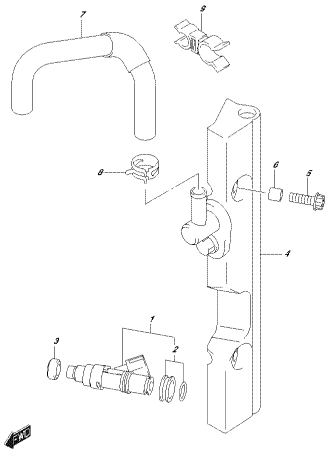

DF80A_E01_016_144H
FUEL INJECTOR

FIG.144J

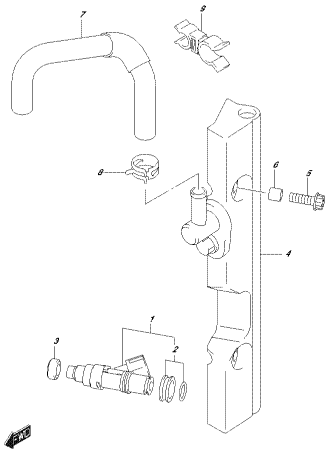

DF80A_E01_016_144J
FUEL INJECTOR

FIG.144K

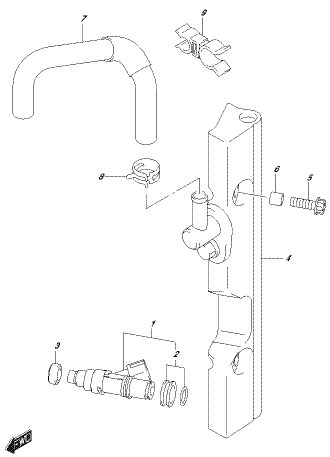

DF80A_E01_016_144K
FUEL INJECTOR

FIG.144L

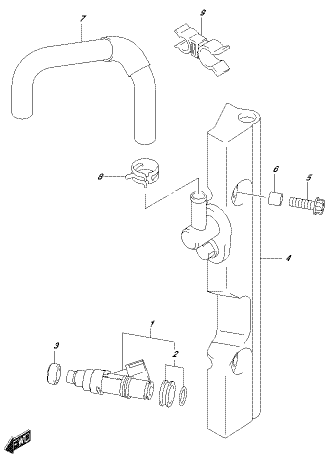

DF80A_E01_016_144L
FUEL INJECTOR

FIG.144M

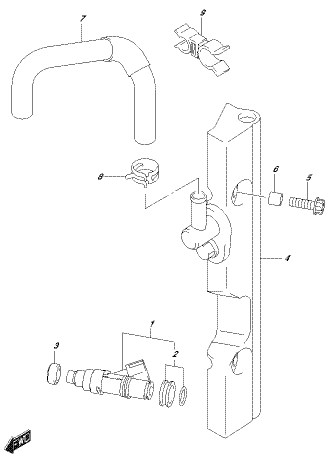

DF80A_E01_016_144M
FUEL INJECTOR

FIG.144N

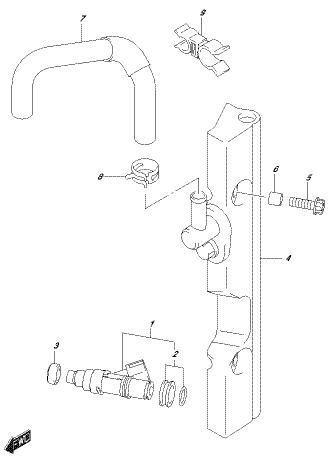

DF80A_E01_016_144N
FUEL INJECTOR

FIG.144P

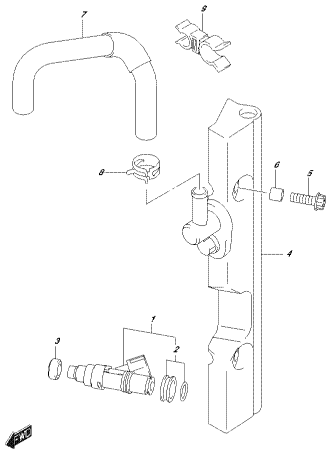

DF90A_E01_01E_144P
FUEL INJECTOR

FIG.144R

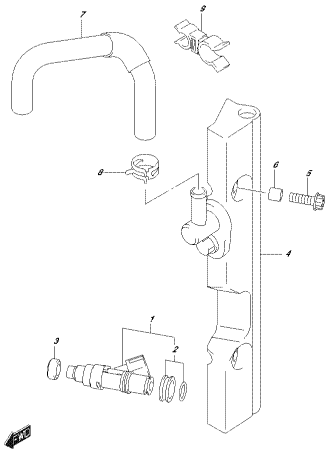

DF90A_E01_01E_144R
FUEL INJECTOR

FIG.144S

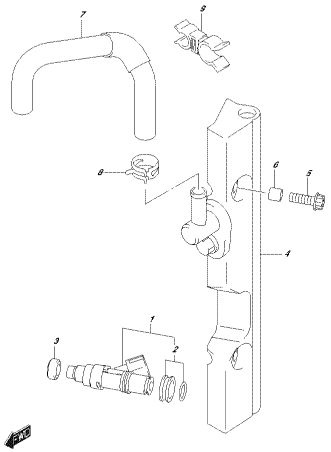

DF90A_E01_01E_144S
FUEL INJECTOR

FIG.144T

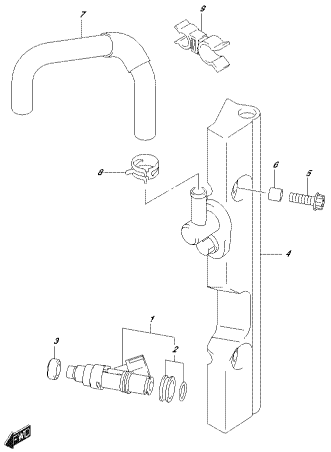

DF90A_E01_01E_144T
FUEL INJECTOR

FIG.144U

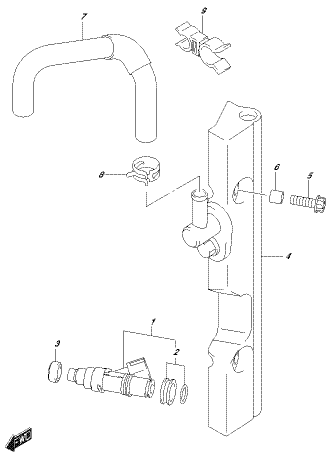

DF90A_E01_01E_144U
FUEL INJECTOR

FIG.146A

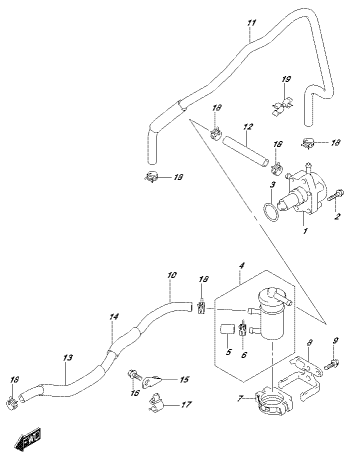

DF90A_E01_01E_146A
FUEL PUMP

FIG.160A

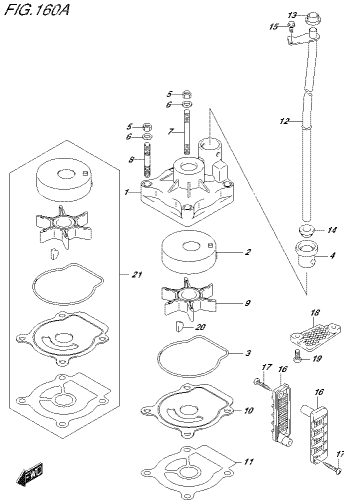

DF90A_E01_01E_160A
WATER PUMP

FIG.160B

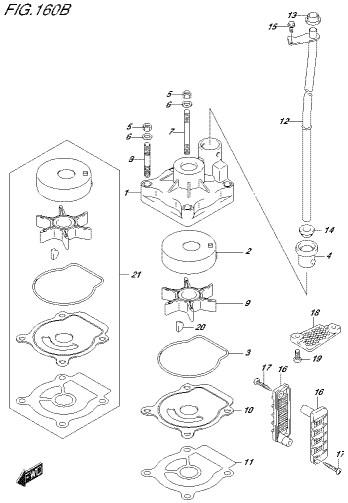

DF90A_E01_01E_160B
WATER PUMP

FIG.160C

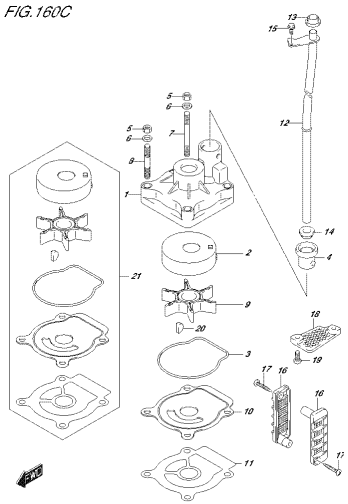

DF60A_E01_01B_160C
WATER PUMP

FIG.160D

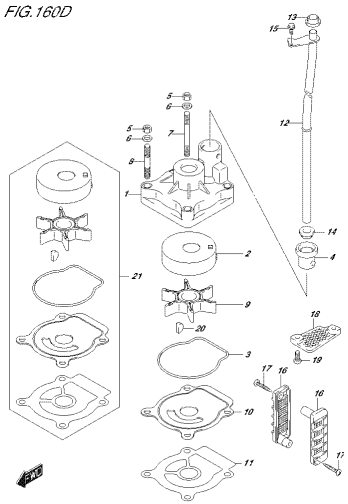

DF60A_E01_01B_160D
WATER PUMP

FIG.160E

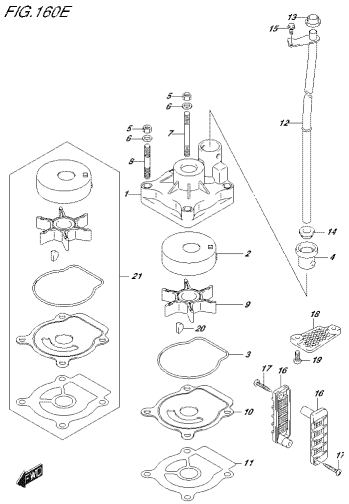

DF60A_E01_01B_160E
WATER PUMP

FIG.160F

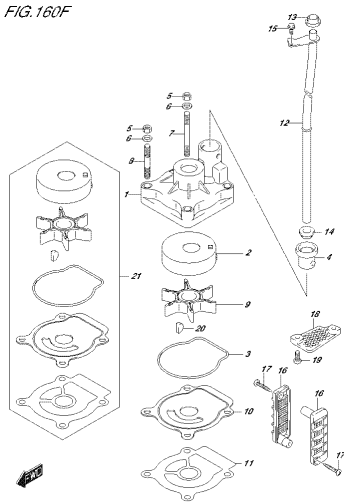

DF60A_E01_01B_160F
WATER PUMP

FIG.160G

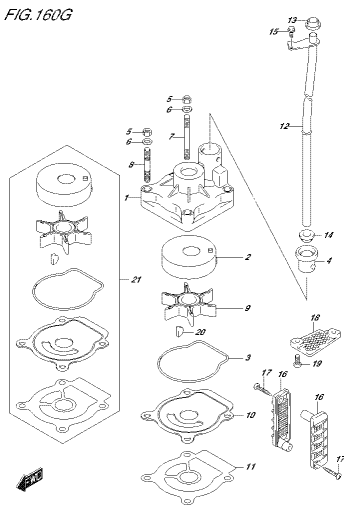

DF60A_E01_01B_160G
WATER PUMP

FIG.160H

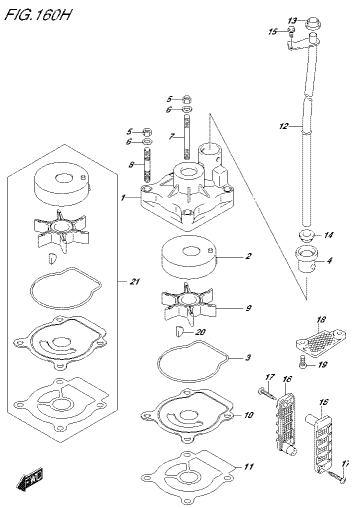

DF60A_E01_01B_160H
WATER PUMP

FIG.160J

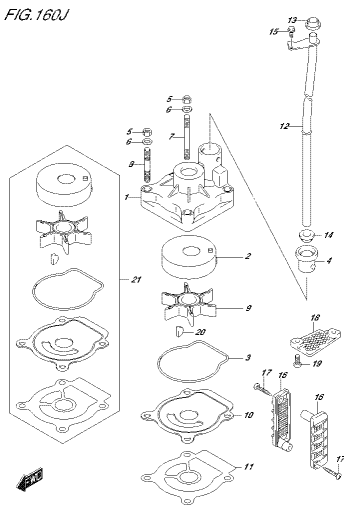

DF60A_E01_01B_160J
WATER PUMP

FIG.160K

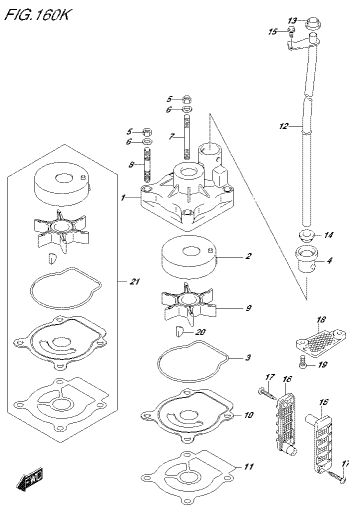

DF60A_E01_01B_160K
WATER PUMP

FIG.160L

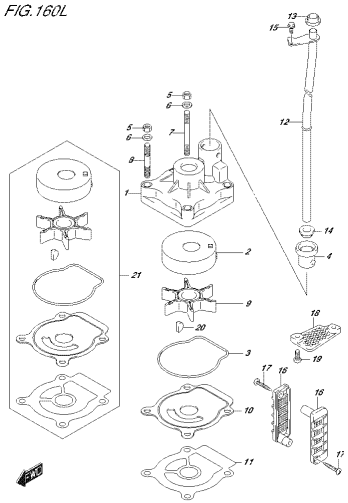

DF60A_E01_01R_160L
WATER PUMP

FIG.160M

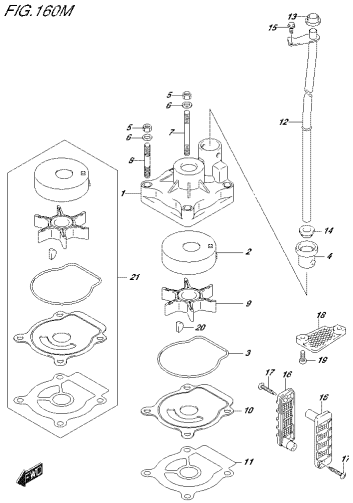

DF60A_E01_01R_160M
WATER PUMP

FIG.160N

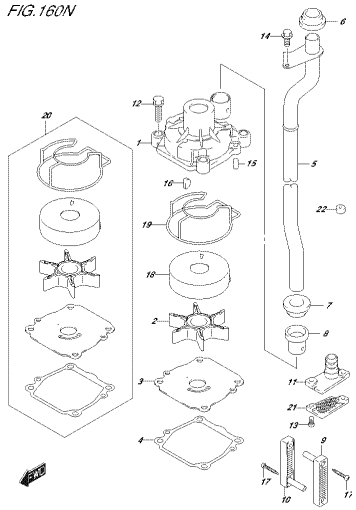

DF60A_E01_01R_160N
WATER PUMP

FIG.160P

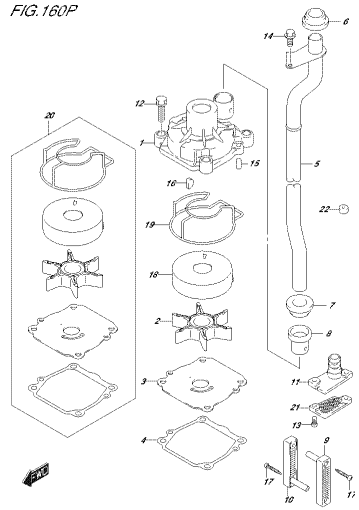

DF60A_E01_01R_160P
WATER PUMP

FIG.160R

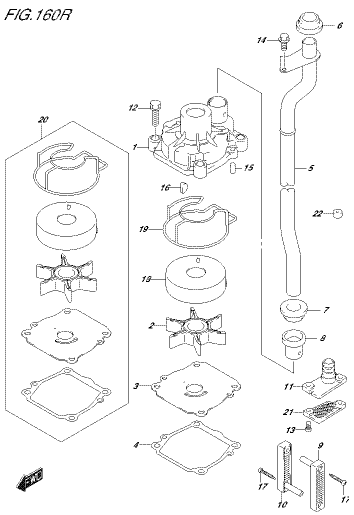

DF60A_E01_01R_160R
WATER PUMP

FIG.160S

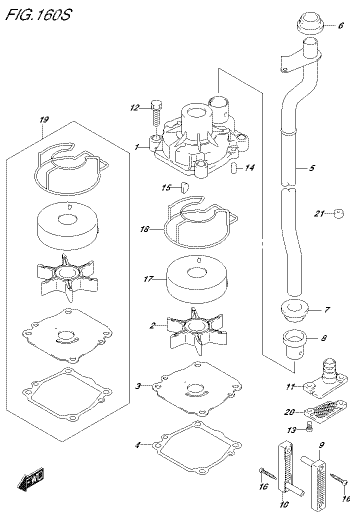

DF60A_E01_01R_160S
WATER PUMP

FIG.160T

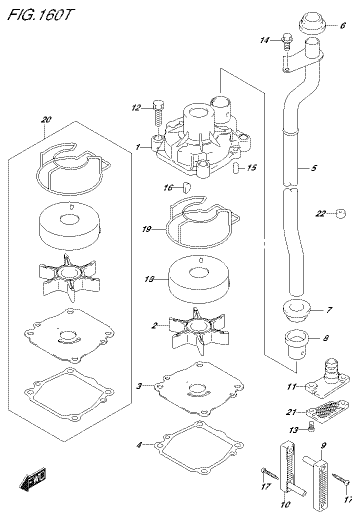

DF60A_E01_01R_160T
WATER PUMP

FIG.160U

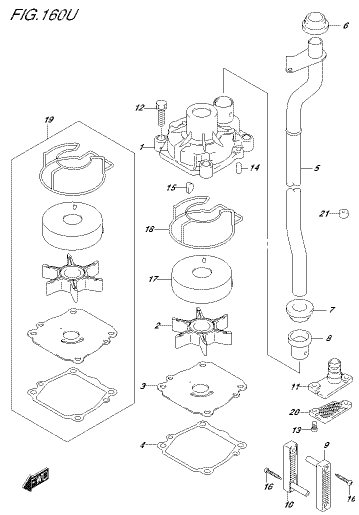

DF60A_E01_01R_160U
WATER PUMP

FIG.162A

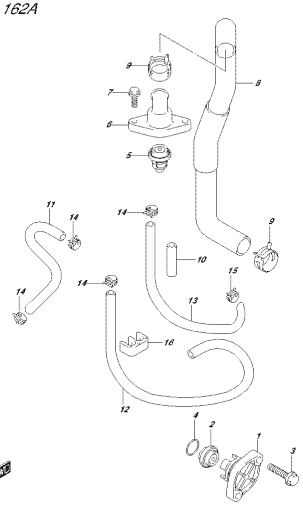

DF90A_E01_01E_163A
THERMOSTAT

FIG.162B

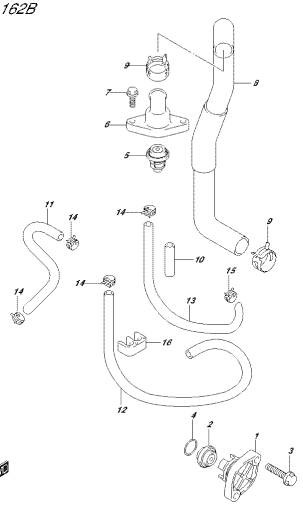

DF90A_E01_01E_163B
THERMOSTAT

FIG.162C

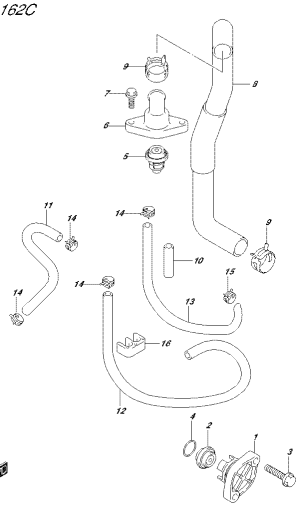

DF90A_E01_01E_163C
THERMOSTAT

FIG.162D

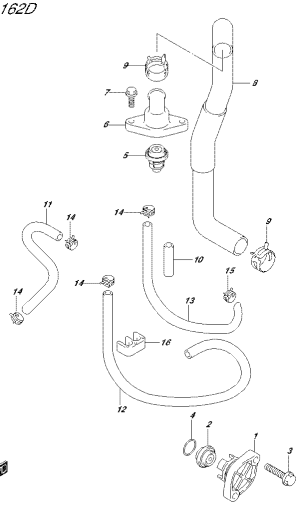

DF90A_E01_01E_163D
THERMOSTAT

FIG.162E

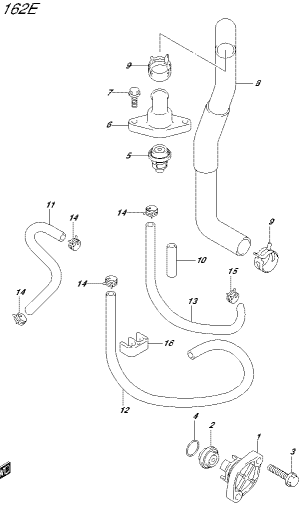

DF90A_E01_01E_163E
THERMOSTAT

FIG.162F

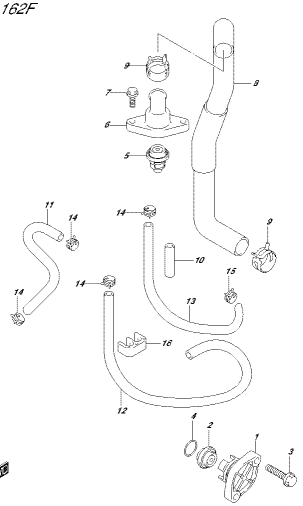

DF90A_E01_01E_163F
THERMOSTAT

FIG.162G

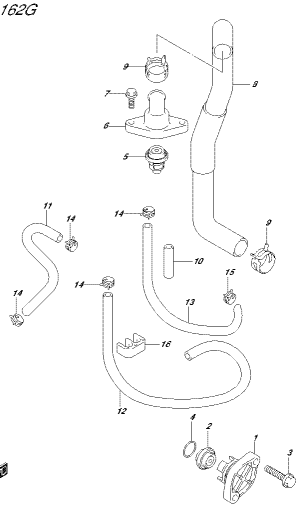

DF90A_E01_01E_163G
THERMOSTAT

FIG.162H

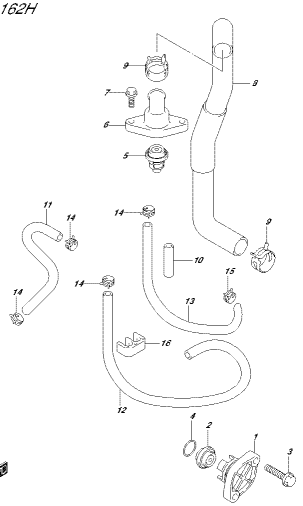

DF90A_E01_01E_163H
THERMOSTAT

FIG.162J

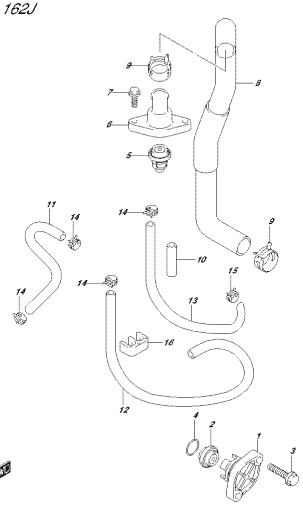

DF90A_E01_01E_163J
THERMOSTAT

FIG.162K

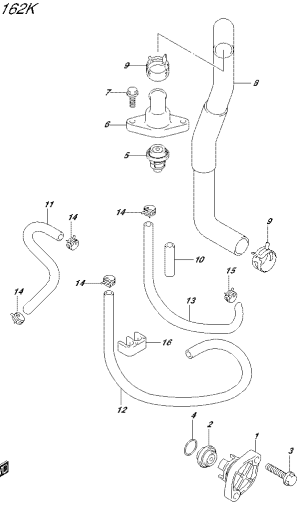

DF90A_E01_01E_163K
THERMOSTAT

FIG.162L

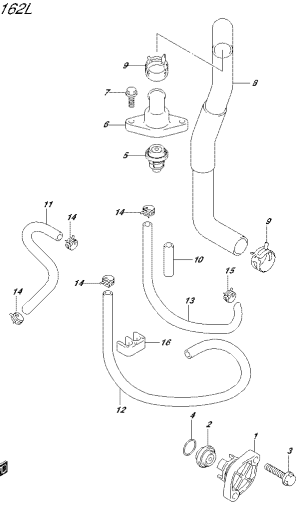

DF90A_E01_01E_163L
THERMOSTAT

FIG.162M

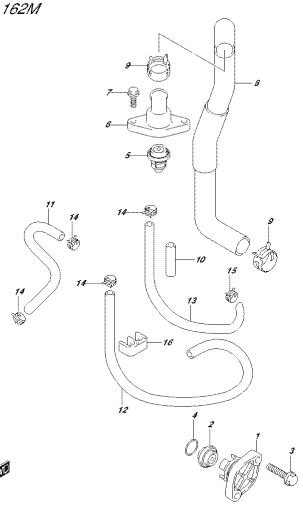

DF90A_E01_01E_163M
THERMOSTAT

FIG.162N

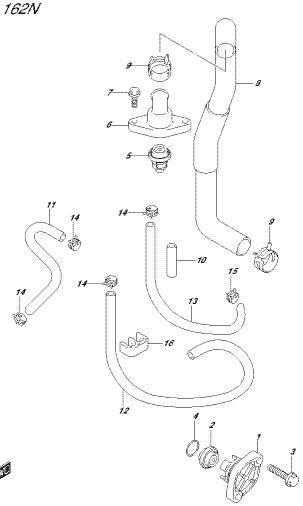

DF90A_E01_01E_163N
THERMOSTAT

FIG.162P

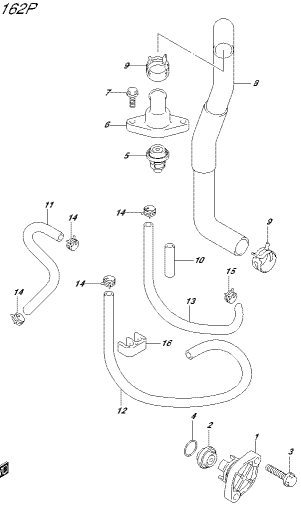

DF90A_E01_01E_163P
THERMOSTAT

FIG.162R

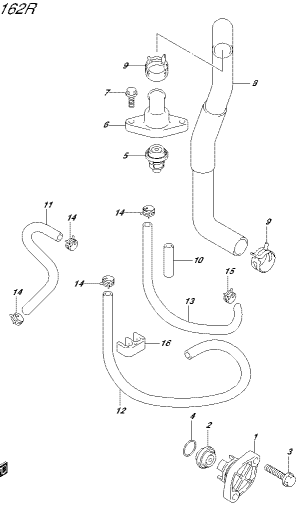

DF90A_E01_01E_163R
THERMOSTAT

FIG.162S

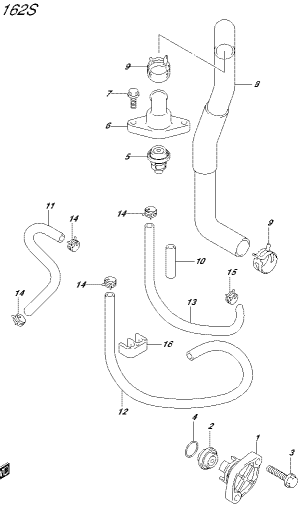

DF90A_E01_01E_163S
THERMOSTAT

FIG.162T

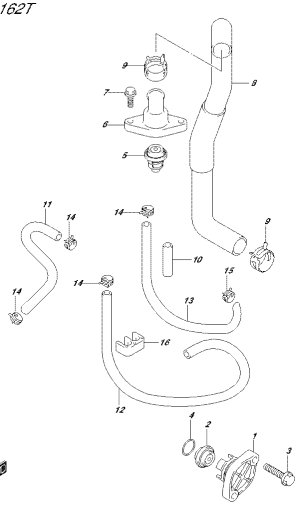

DF8RA_E01_01E_162T
THERMOSTAT

FIG.162U

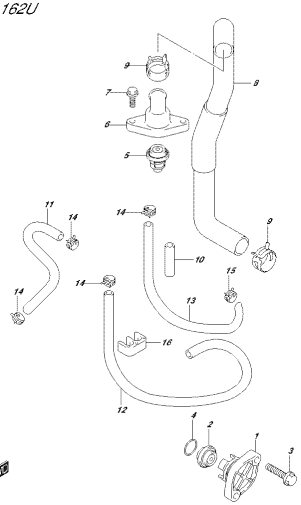

DF8RA_E01_01E_162U
THERMOSTAT

FIG.163A

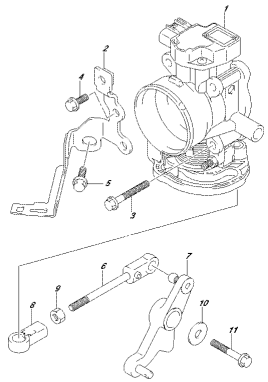

DF8RA_E01_01E_163A
THROTTLE BODY

FIG.163B

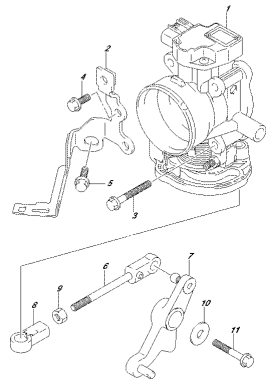

DF8RA_E01_01E_163B
THROTTLE BODY

FIG.163C

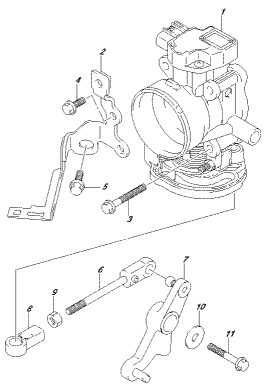

DF8RA_E01_01E_163C
THROTTLE BODY

FIG.163D

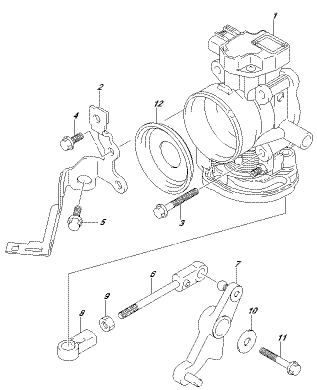

DF8RA_E01_01E_163D
THROTTLE BODY

FIG.163E

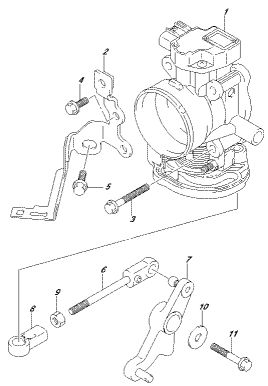

DF8RA_E01_01E_163E
THROTTLE BODY

FIG.163F

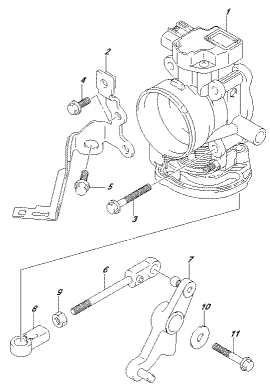

DF8RA_E01_01E_163F
THROTTLE BODY

FIG.163G

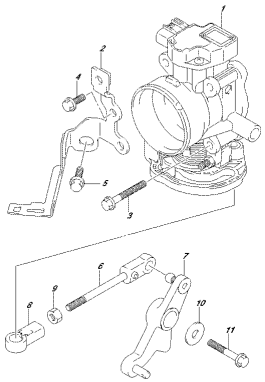

FWD

DFR9A_E01_01E_163G
THROTTLE BODY

FIG.163H

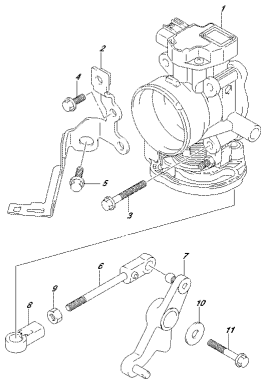

FWD

DFR9A_E01_01E_163H
THROTTLE BODY

FIG.163J

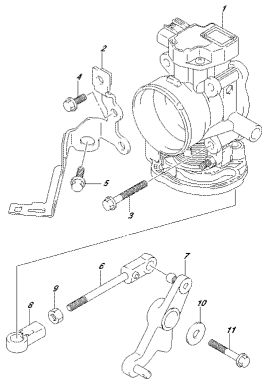

FWD

DFR9A_E01_01E_163J
THROTTLE BODY

FIG.163K

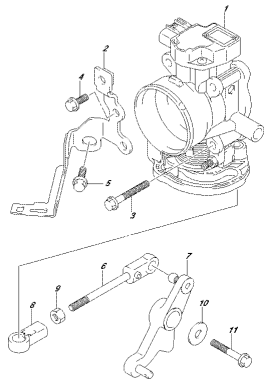

FWD

DFR9A_E01_01E_163K
THROTTLE BODY

FIG.163L

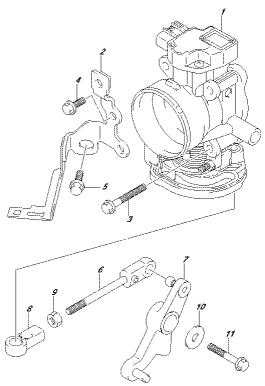

FWD

DFR9A_E01_01E_163L
THROTTLE BODY

FIG.163M

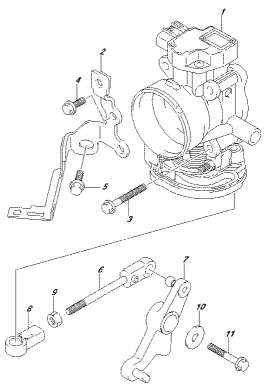

FWD

DFR9A_E01_01E_163M
THROTTLE BODY

FIG.163N

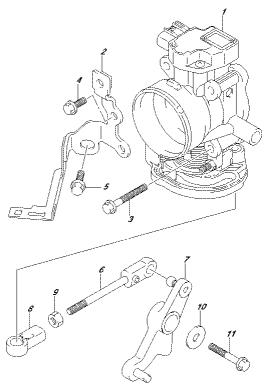

FWD

DFR9A_E01_01E_163N
THROTTLE BODY

FIG.163P

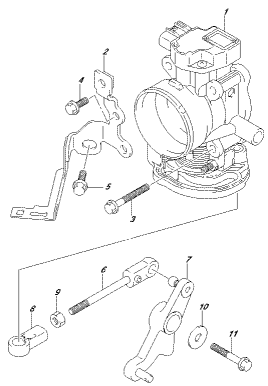

FWD

DFR9A_E01_01E_163P
THROTTLE BODY

FIG.163R

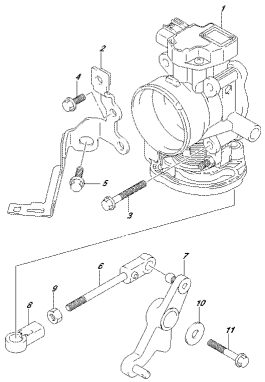

DF90A_E01_01E_163R
THROTTLE BODY

FIG.163S

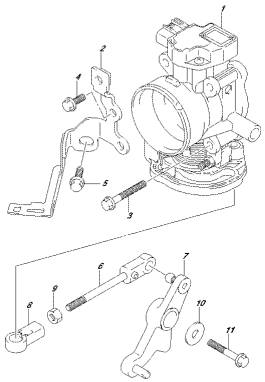

DF90A_E01_01E_163S
THROTTLE BODY

FIG.163T

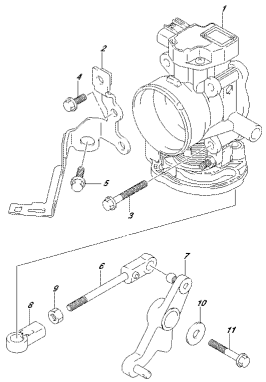

DF90A_E01_01E_163T
THROTTLE BODY

FIG.163U

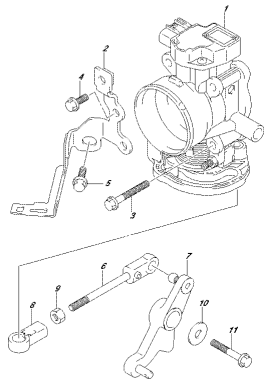

DF90A_E01_01E_163U
THROTTLE BODY

FIG.175A

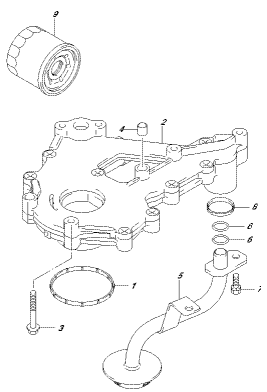

DF90A_E01_01E_175A
OIL PUMP

FIG.180A

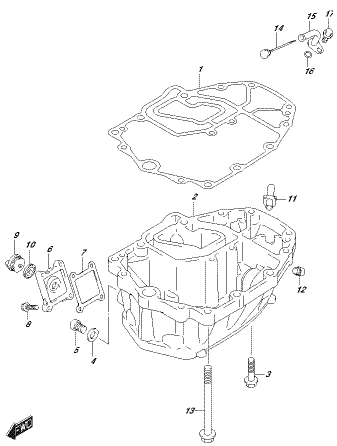

DF90A_E01_01E_180A
OIL PAN

FIG.180B

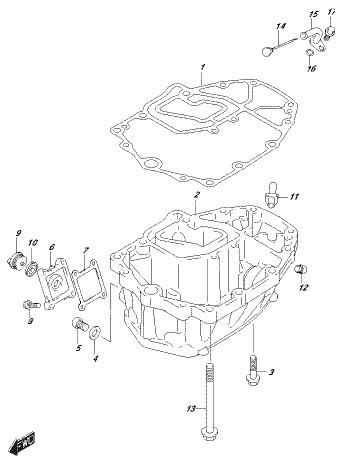

DF90A_E01_01E_180B
OIL PAN

FIG.180C

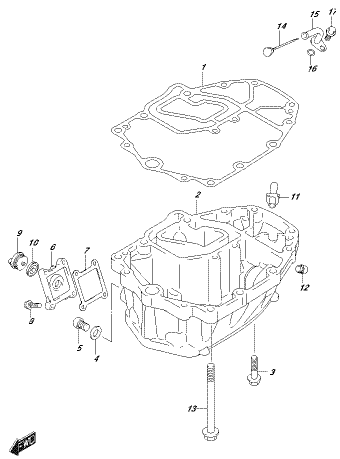

DF90A_E01_01E_180C
OIL PAN

FIG.180D

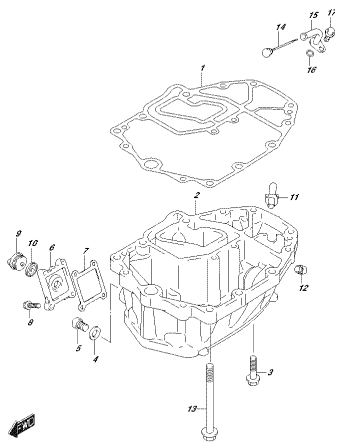

DF90A_E01_01E_180D
OIL PAN

FIG.180E

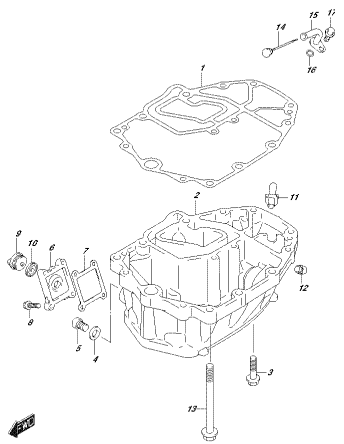

DF90A_E01_01E_180E
OIL PAN

FIG.180F

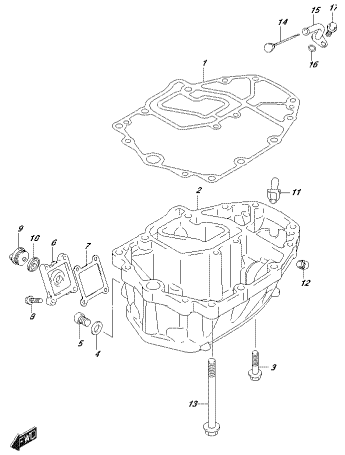

DF90A_E01_01E_180F
OIL PAN

FIG.180G

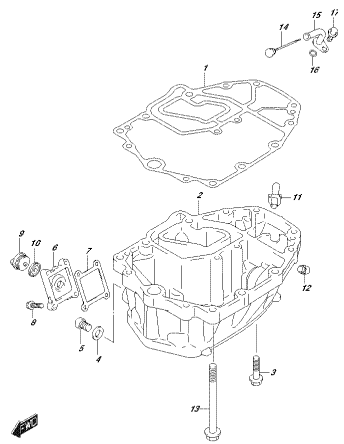

DF90A_E01_01E_180G
OIL PAN

FIG.180H

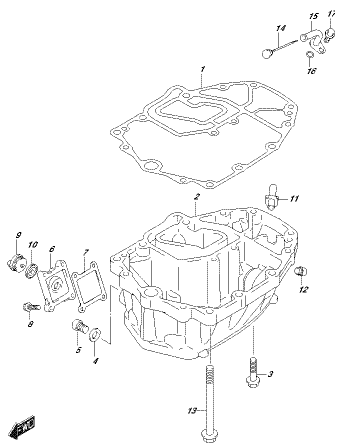

DF90A_E01_01E_180H
OIL PAN

FIG.180J

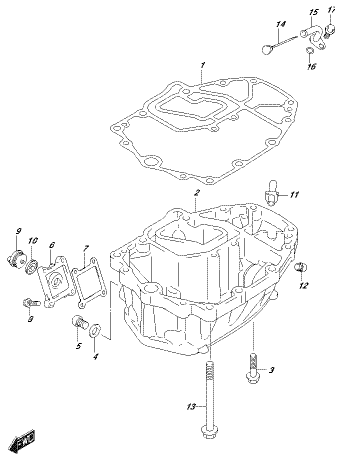

DF90A_E01_01E_180J
OIL PAN

FIG.180K

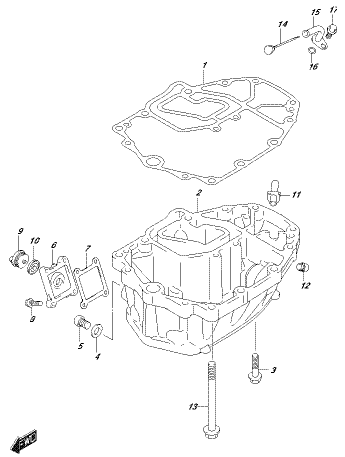

DF90A_E01_01E_180K
OIL PAN

FIG.180L

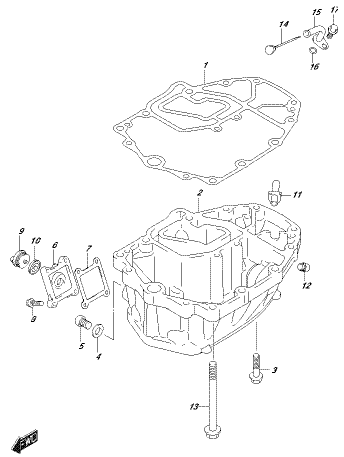

DF90A_E01_01E_180L
OIL PAN

FIG.180M

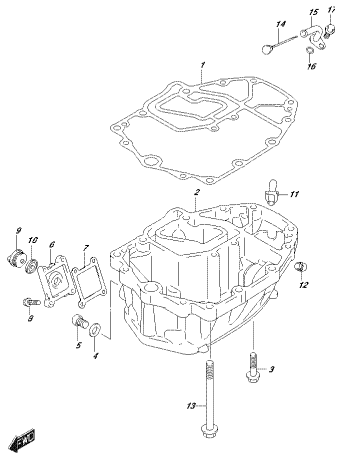

DF90A_E01_01E_180M
OIL PAN

FIG.180N

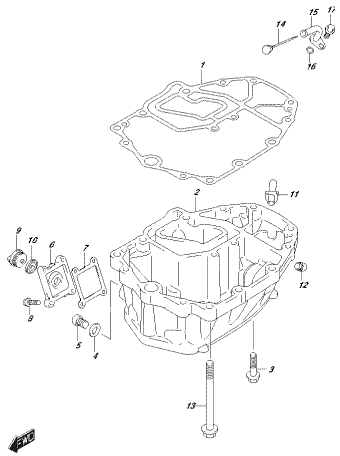

DF90A_E01_01E_180N
OIL PAN

FIG.180P

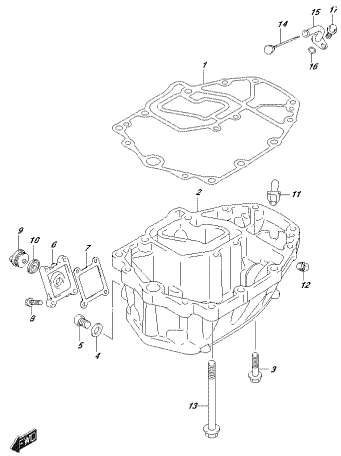

DF90A_E01_01E_180P
OIL PAN

FIG.180R

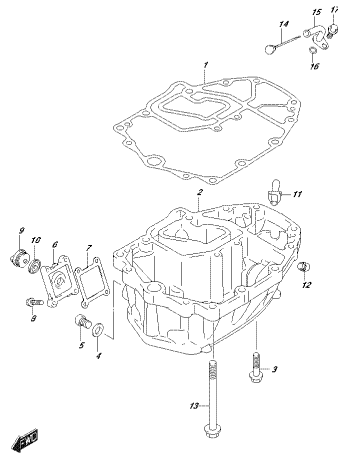

DF90A_E01_01E_180R
OIL PAN

FIG.180S

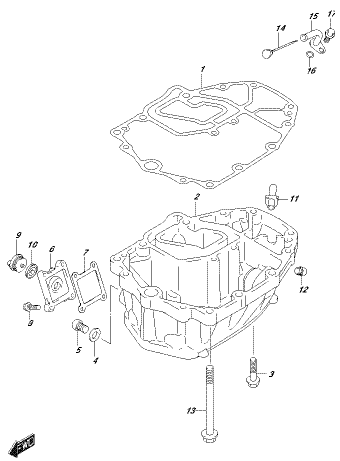

DF90A_E01_01E_180S
OIL PAN

FIG.180T

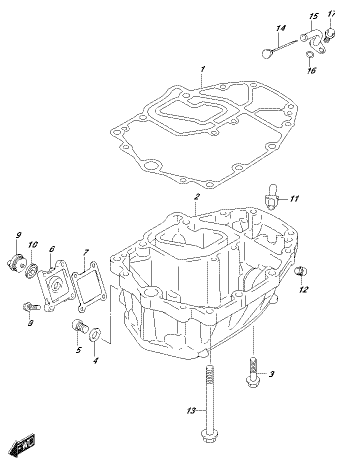

DF90A_E01_01E_180T
OIL PAN

FIG.180U

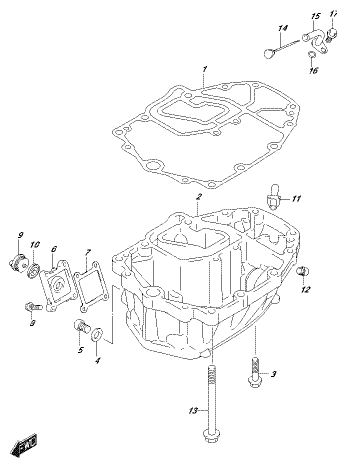

DF90A_E01_01E_180U
OIL PAN

FIG.204A

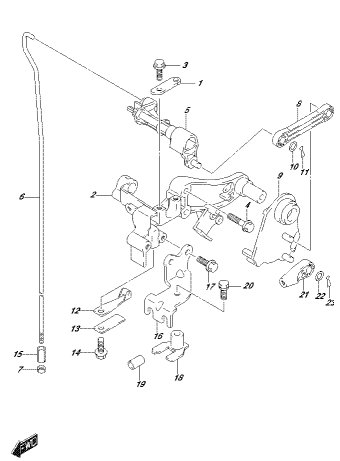

DF90A_E01_01E_204A
CLUTCH SHAFT

FIG.204B

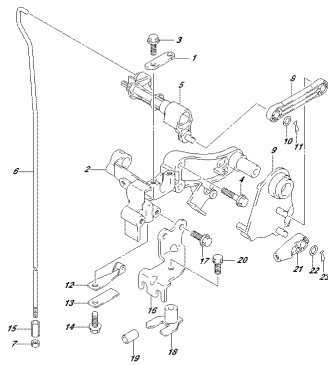

DF80A_E01_018_204B
CLUTCH SHAFT

FIG.204C

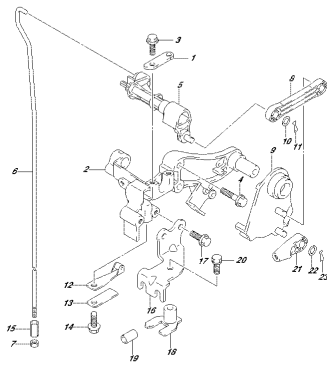

DF80A_E01_018_204C
CLUTCH SHAFT

FIG.204D

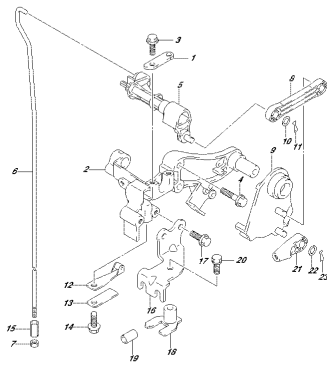

DF80A_E01_018_204D
CLUTCH SHAFT

FIG.204E

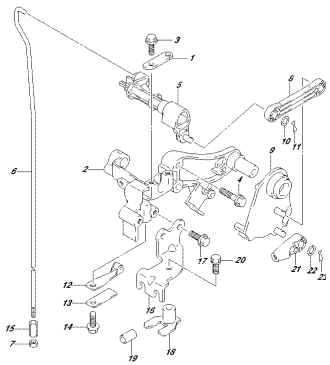

DF80A_E01_018_204E
CLUTCH SHAFT

FIG.204F

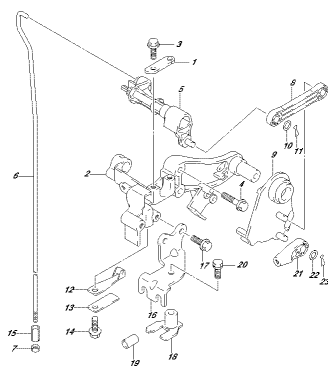

DF80A_E01_018_204F
CLUTCH SHAFT

FIG.204G

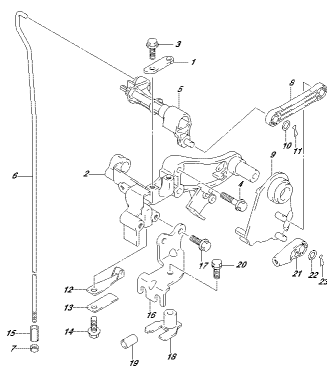

DF80A_E01_018_204G
CLUTCH SHAFT

FIG.204H

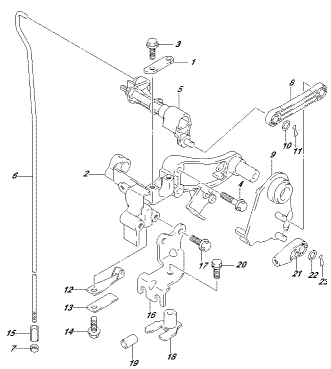

DF80A_E01_018_204H
CLUTCH SHAFT

FIG.204J

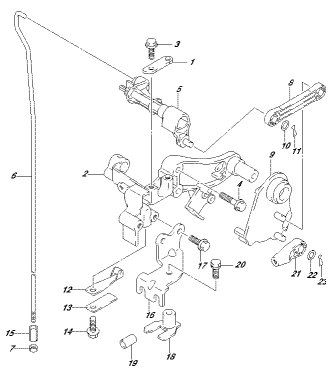

DF80A_E01_018_204J
CLUTCH SHAFT

FIG.204K

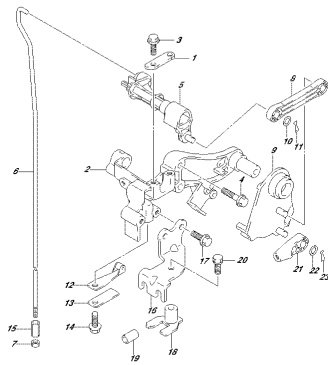

DF80A_E01_018_204K
CLUTCH SHAFT

FIG.204L

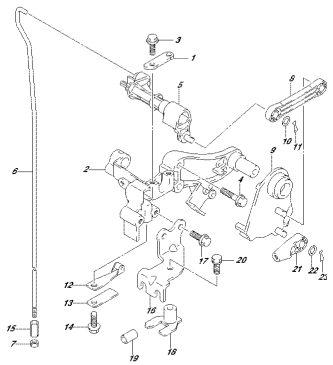

DF80A_E01_018_204L
CLUTCH SHAFT

FIG.204M

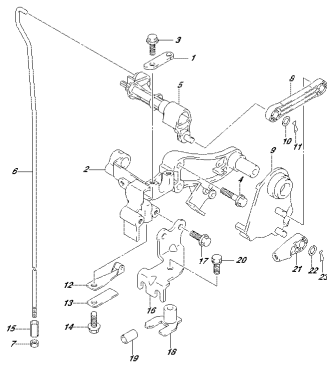

DF80A_E01_018_204M
CLUTCH SHAFT

FIG.204N

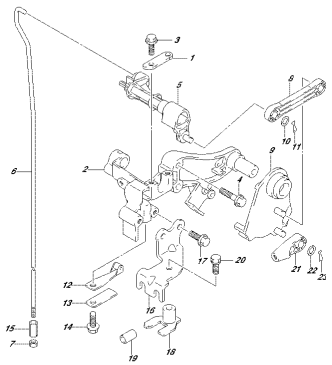

DF80A_E01_018_204N
CLUTCH SHAFT

FIG.204P

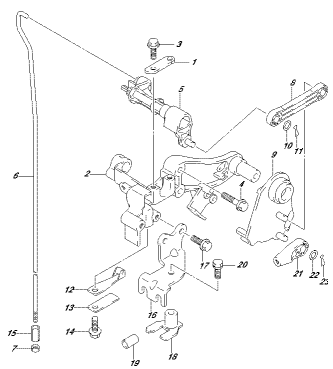

DF80A_E01_018_204P
CLUTCH SHAFT

FIG.204R

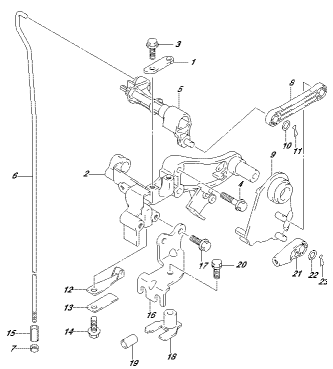

DF80A_E01_018_204R
CLUTCH SHAFT

FIG.204S

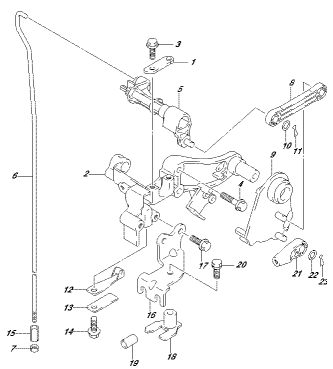

DF80A_E01_018_204S
CLUTCH SHAFT

FIG.204T

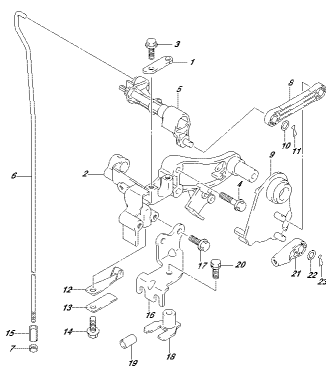

DF80A_E01_018_204T
CLUTCH SHAFT

FIG.204U

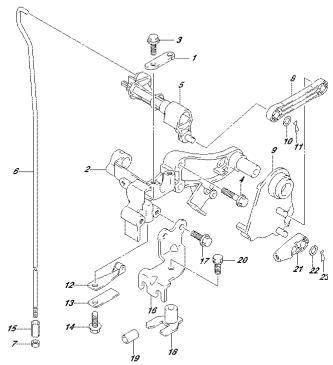

DF8R4_E01_01K_204U
CLUTCH SHAFT

FIG.206A

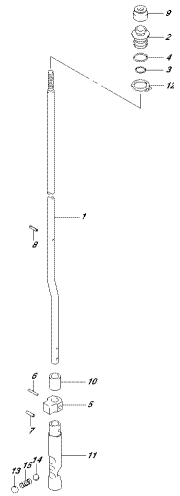

DF8R4_E01_01K_206A
CLUTCH ROD

FIG.206B

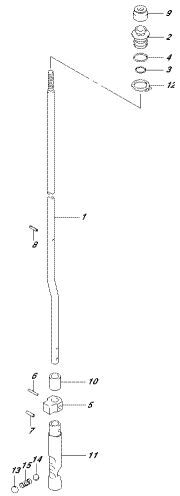

DF8R4_E01_01K_206B
CLUTCH ROD

FIG.206C

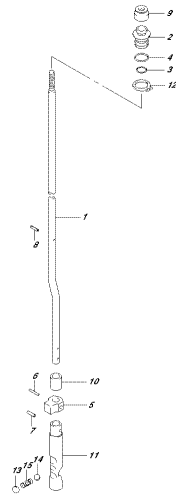

DF8R4_E01_01K_206C
CLUTCH ROD

FIG.206D

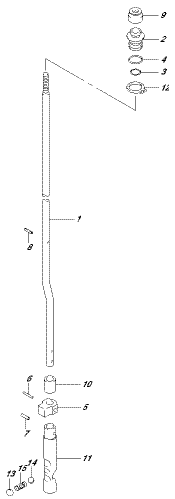

DF8R4_E01_01K_206D
CLUTCH ROD

FIG.206E

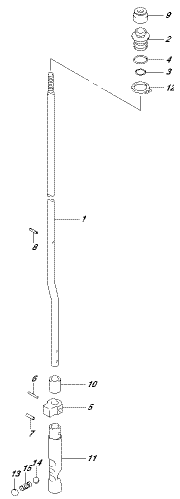

DF8R4_E01_01K_206E
CLUTCH ROD

FIG.206F

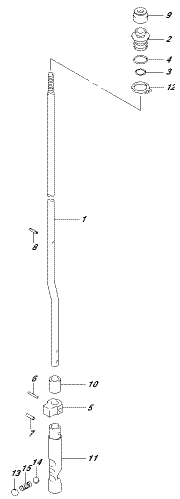

DF8R4_E01_01K_206F
CLUTCH ROD

FIG.206G

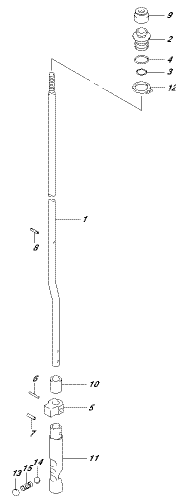

DF8R4_E01_01K_206G
CLUTCH ROD

FIG.206H

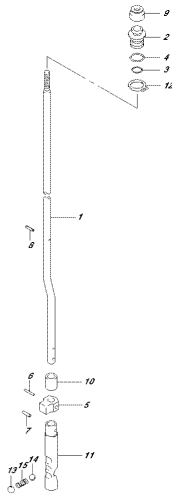

DF90A_E01_01B_206H
CLUTCH ROD

FIG.206J

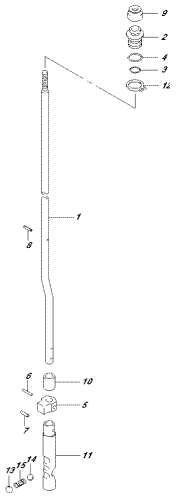

DF90A_E01_01B_206J
CLUTCH ROD

FIG.206K

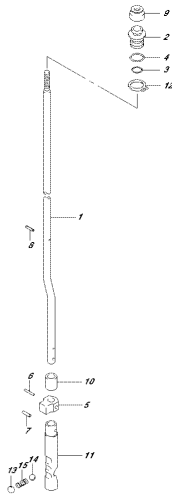

DF90A_E01_01B_206K
CLUTCH ROD

FIG.206L

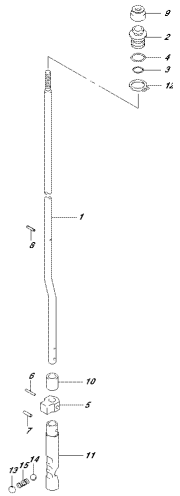

DF90A_E01_01B_206L
CLUTCH ROD

FIG.206M

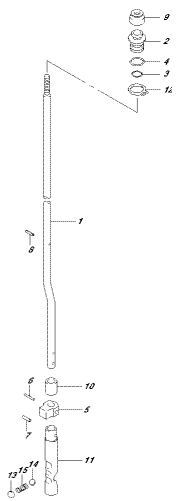

DF90A_E01_01B_206M
CLUTCH ROD

FIG.210A

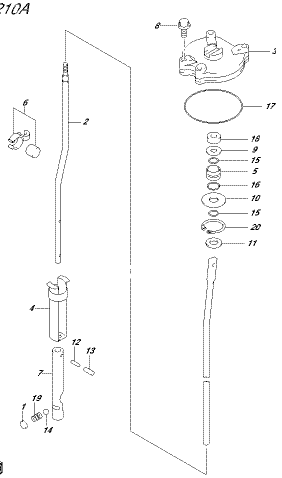

DF90A_E01_01B_210A
SHIFT ROD

FIG.210B

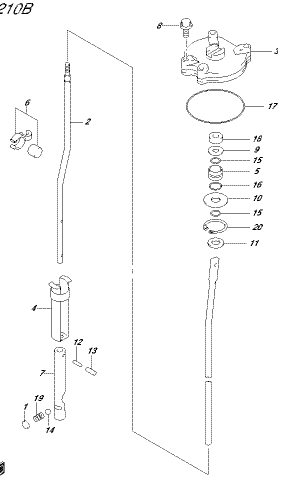

DF90A_E01_01B_210B
SHIFT ROD

FIG.210C

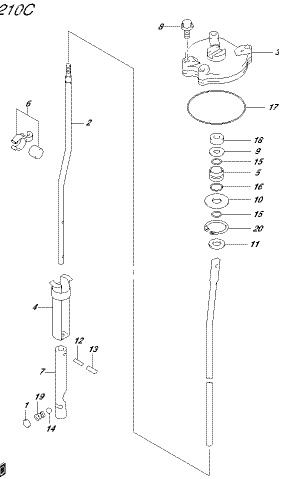

DF90A_E01_01B_210C
SHIFT ROD

FIG.210D

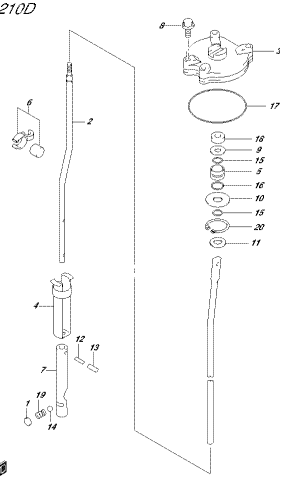

DF90A_E01_01B_210D
SHIFT ROD

FIG.210E

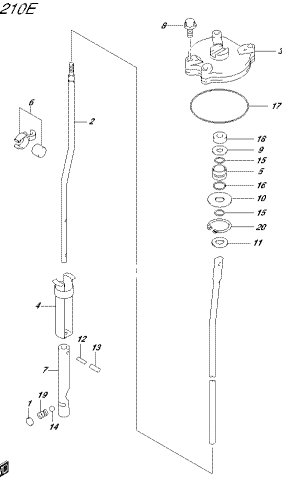

DF90A_E01_01B_210E
SHIFT ROD

FIG.210F

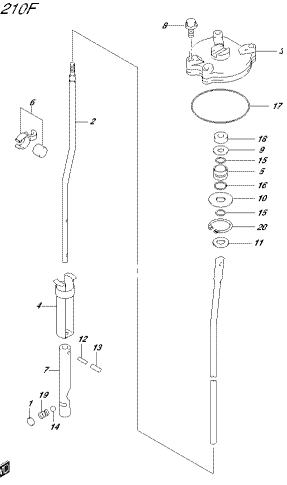

DF90A_E01_01B_210F
SHIFT ROD

FIG.220A

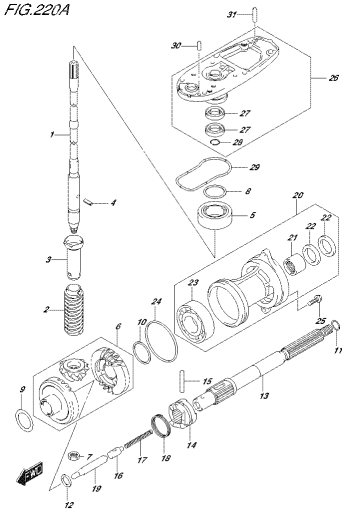

DF90A_E01_01B_220A
TRANSMISSION

FIG.220B

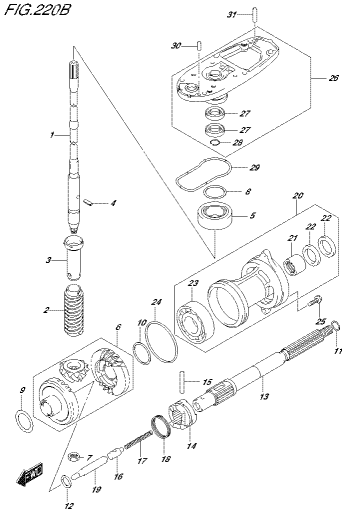

DF90A_E01_01B_220B
TRANSMISSION

FIG.220C

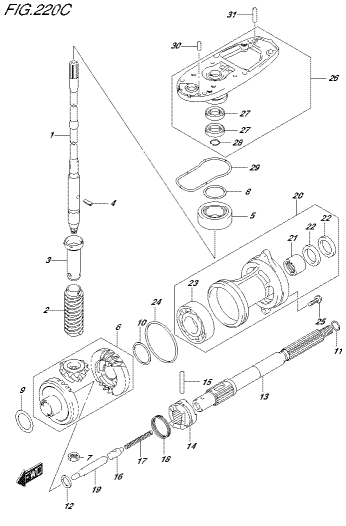

DF90A_E01_01B_220C
TRANSMISSION

FIG.220D

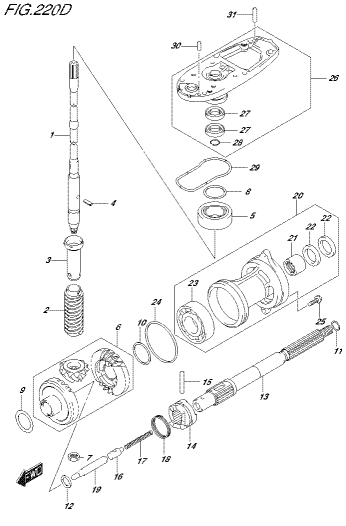

DF90A_E01_01B_220D
TRANSMISSION

FIG.220E

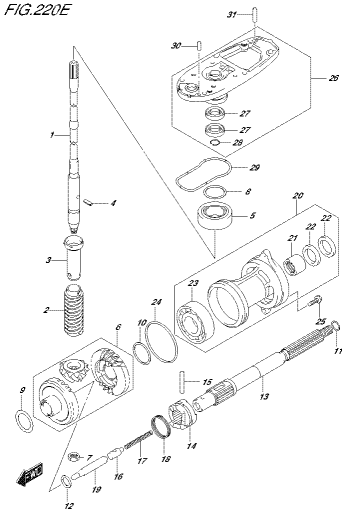

DF90A_E01_01B_220E
TRANSMISSION

FIG.220F

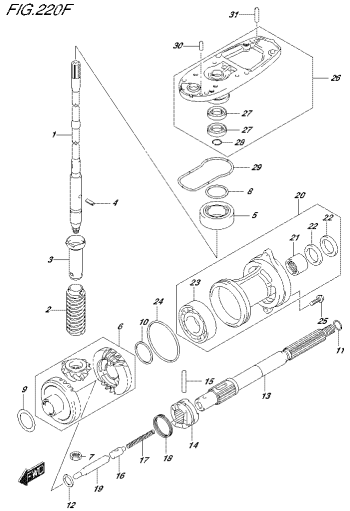

DF90A_E01_01K_220F
TRANSMISSION

FIG.220G

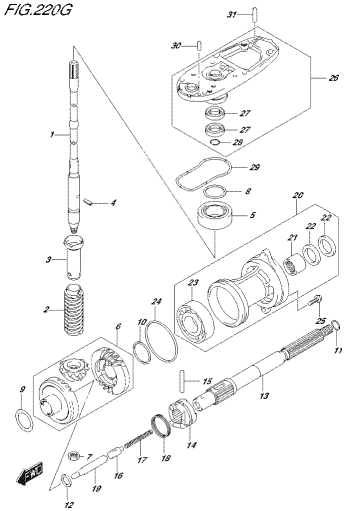

DF90A_E01_01K_220G
TRANSMISSION

FIG.220H

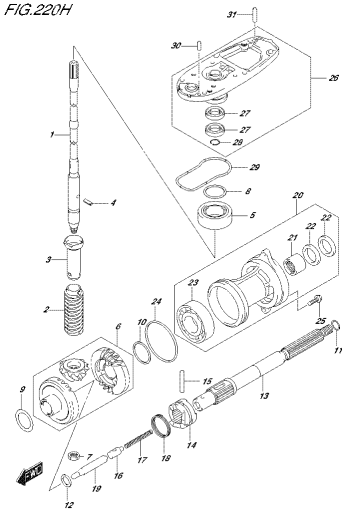

DF90A_E01_01K_220H
TRANSMISSION

FIG.220J

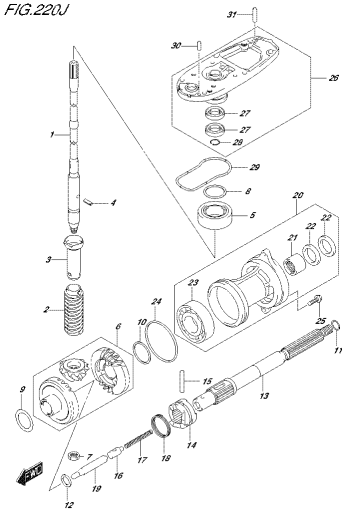

DF90A_E01_01K_220J
TRANSMISSION

FIG.220K

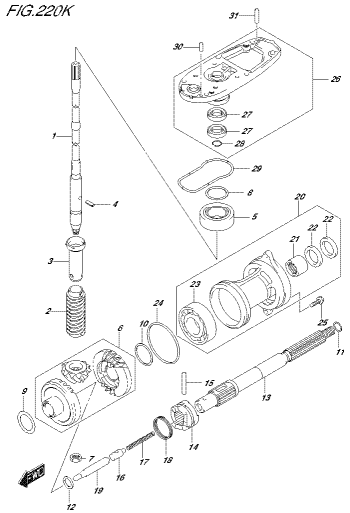

DF90A_E01_01K_220K
TRANSMISSION

FIG.220L

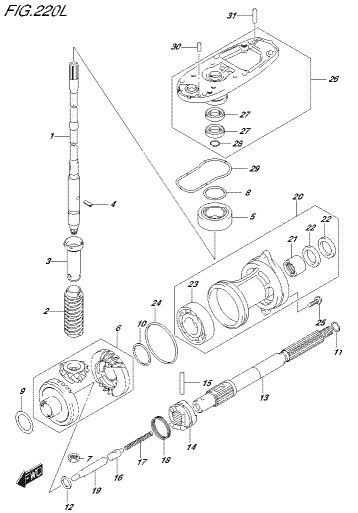

DF90A_E01_01K_220L
TRANSMISSION

FIG.220M

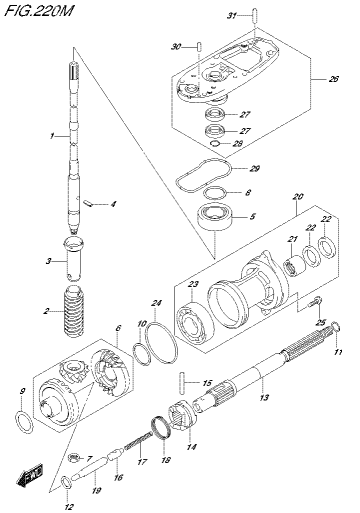

DF90A_E01_01K_220M
TRANSMISSION

FIG.220N

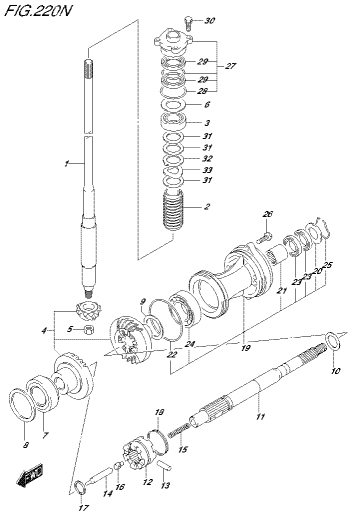

DF90A_E01_01K_220N
TRANSMISSION

FIG.220P

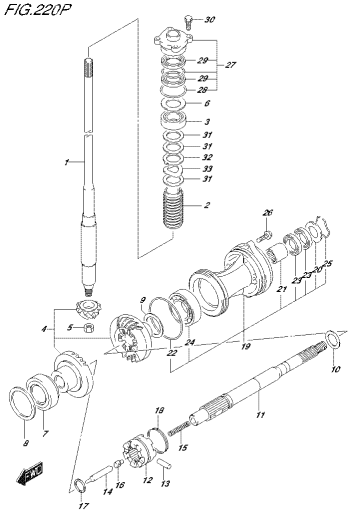

DF90A_E01_01B_220P
TRANSMISSION

FIG.220R

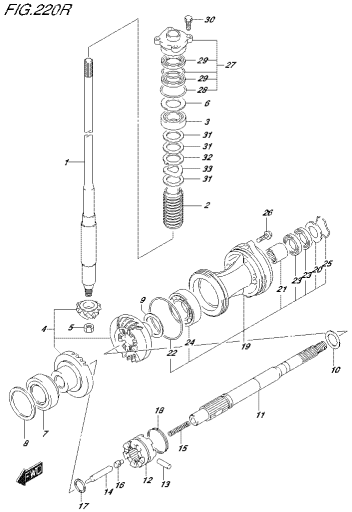

DF90A_E01_01B_220R
TRANSMISSION

FIG.220S

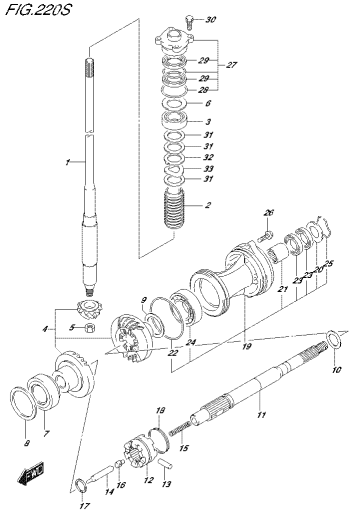

DF90A_E01_01B_220S
TRANSMISSION

FIG.220T

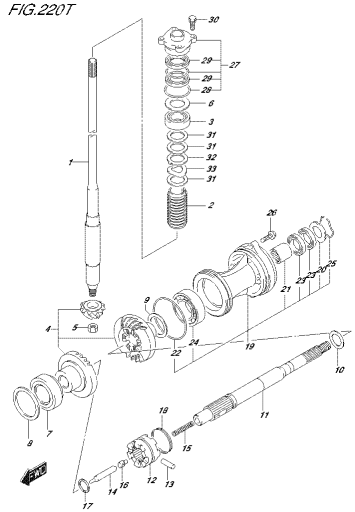

DF90A_E01_01B_220T
TRANSMISSION

FIG.220U

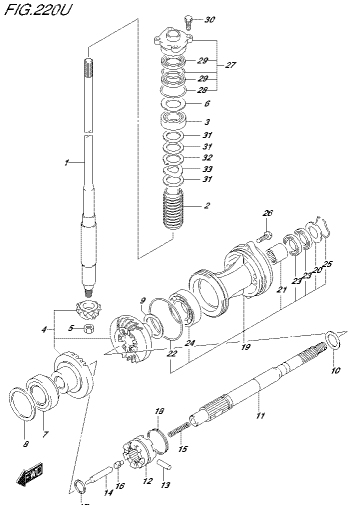

DF90A_E01_01B_220U
TRANSMISSION

FIG.301A

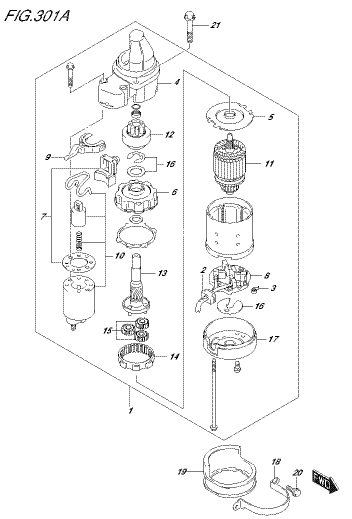

DF90A_E01_01B_301A
STARTING MOTOR

FIG.303A

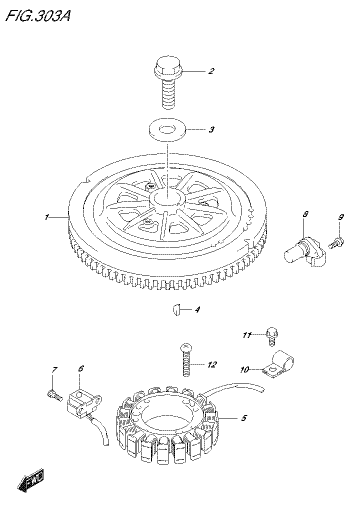

DF90A_E01_01B_303A
MAGNETO

FIG.310A

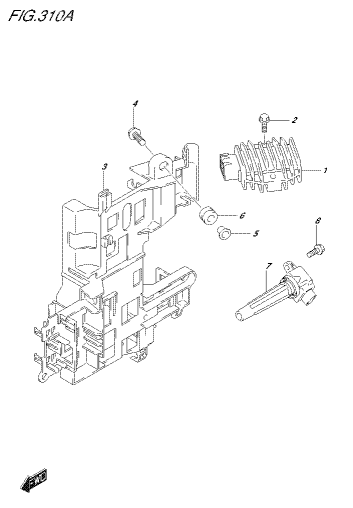

DF90A_E01_01B_310A
RECTIFIER/IGNITION COIL

FIG.315A

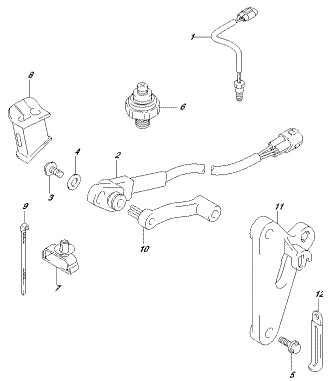

DF90A_E01_01K_315A
SENSOR

FIG.315B

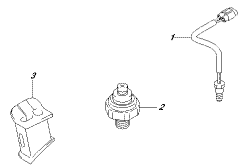

DF90A_E01_01K_315B
SENSOR

FIG.315C

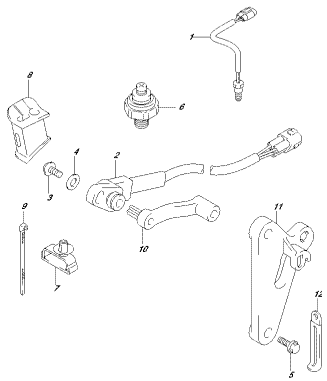

DF90A_E01_01K_315C
SENSOR

FIG.315D

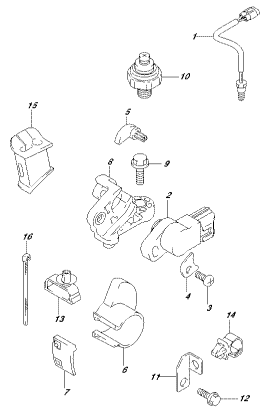

DF90A_E01_01K_315D
SENSOR

FIG.315E

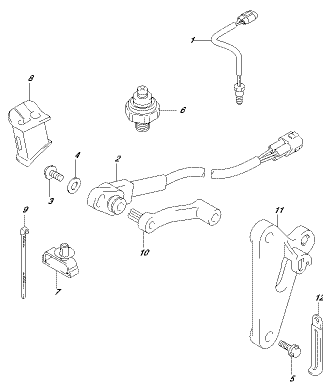

DF90A_E01_01K_315E
SENSOR

FIG.315F

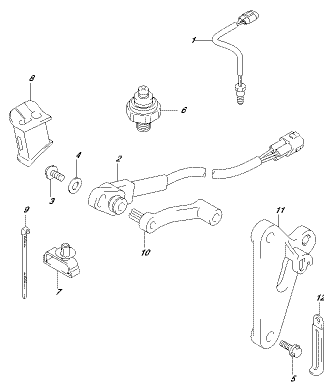

DF90A_E01_01K_315F
SENSOR

FIG.315G

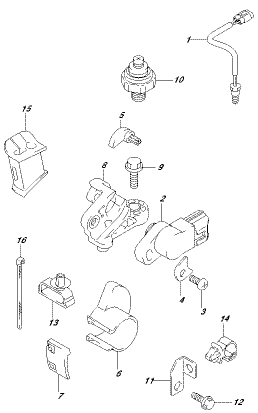

DF90A_E01_01K_315G
SENSOR

FIG.315H

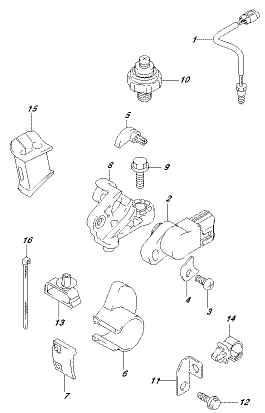

DF90A_E01_01K_315H
SENSOR

FIG.315J

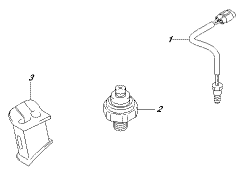

DF90A_E01_01K_315J
SENSOR

FIG.315K

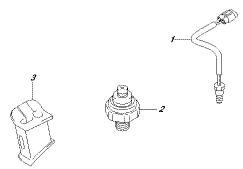

DF90A_E01_01K_315K
SENSOR

FIG.315L

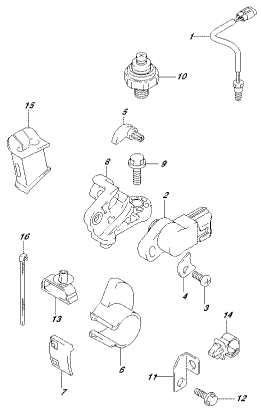

DF90A_E01_01K_315L
SENSOR

FIG.315M

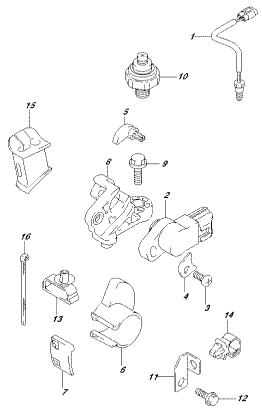

DF90A_E01_01K_315M
SENSOR

FIG.315N

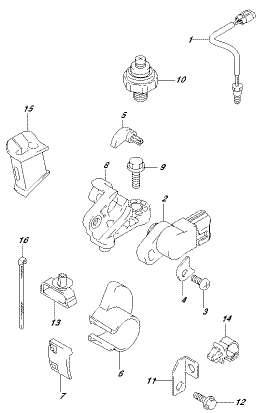

DF90A_E01_01K_315N
SENSOR

FIG.315P

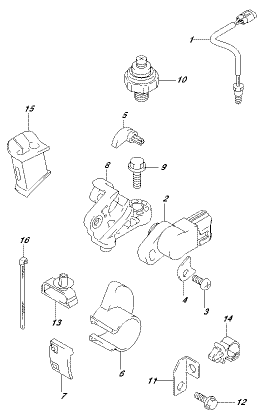

DF90A_E01_01K_315P
SENSOR

FIG.315R

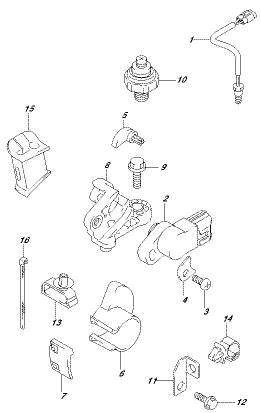

DF90A_E01_01K_315R
SENSOR

FIG.315S

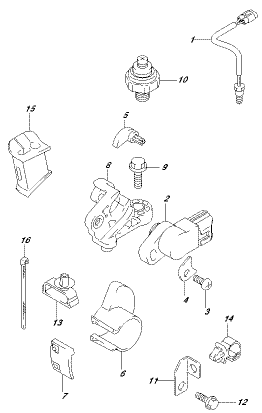

DF90A_E01_01K_315S
SENSOR

FIG.315T

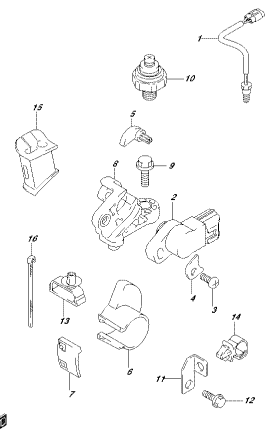

DF8RA_E01_01K_315T
SENSOR

FIG.315U

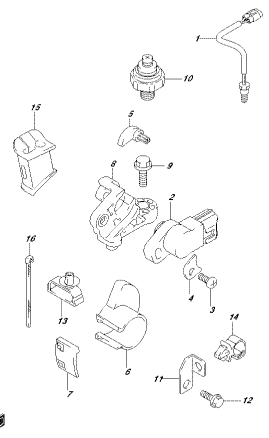

DF8RA_E01_01K_315U
SENSOR

FIG.322A

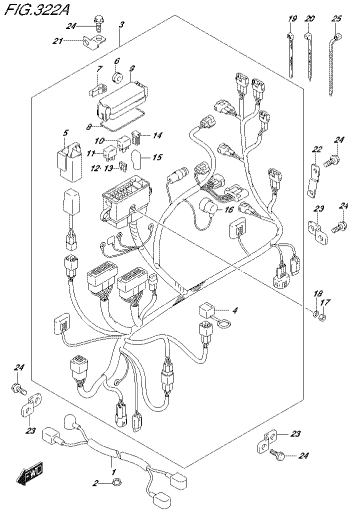

DF8RA_E01_01K_322A
HARNESS

FIG.322B

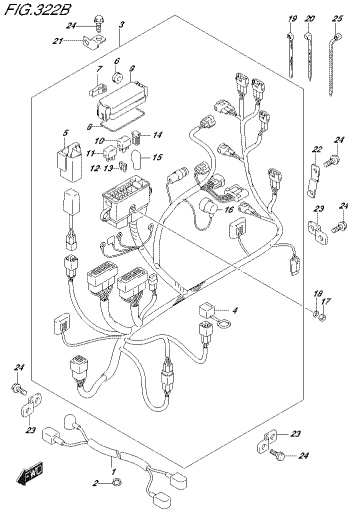

DF8RA_E01_01K_322B
HARNESS

FIG.322C

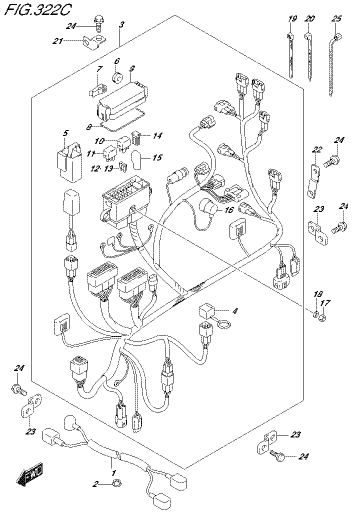

DF8RA_E01_01K_322C
HARNESS

FIG.322D

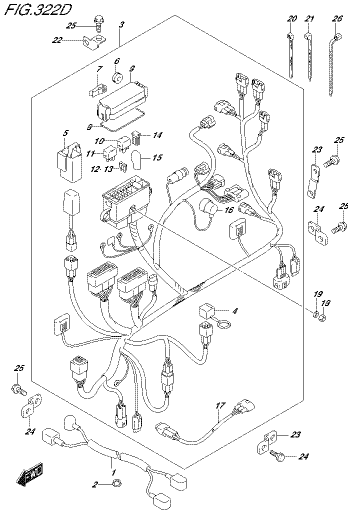

DF8RA_E01_01K_322D
HARNESS

FIG.322E

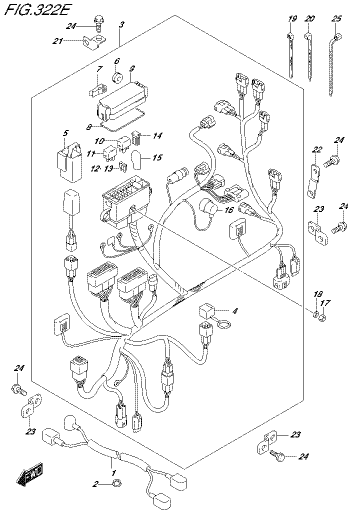

DF8RA_E01_01K_322E
HARNESS

FIG.322F

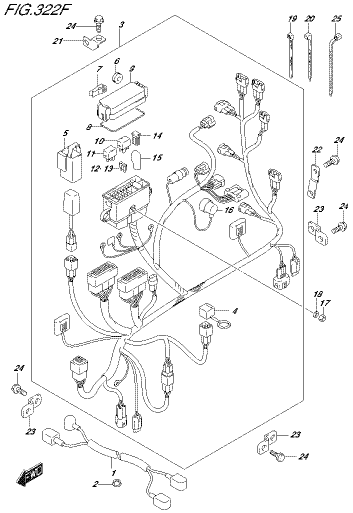

DF8RA_E01_01K_322F
HARNESS

FIG.322G

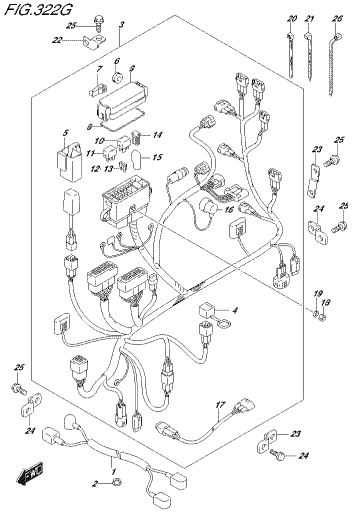

DF90A_E01_01K_322G
HARNESS

FIG.322H

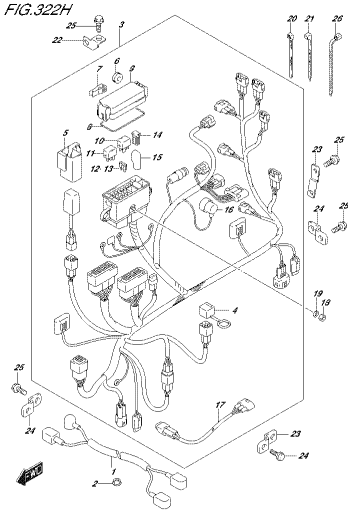

DF90A_E01_01K_322H
HARNESS

FIG.322J

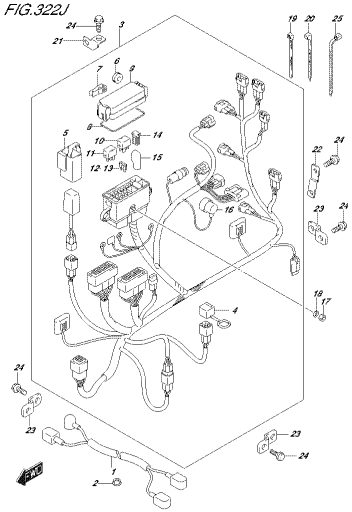

DF90A_E01_01K_322J
HARNESS

FIG.322K

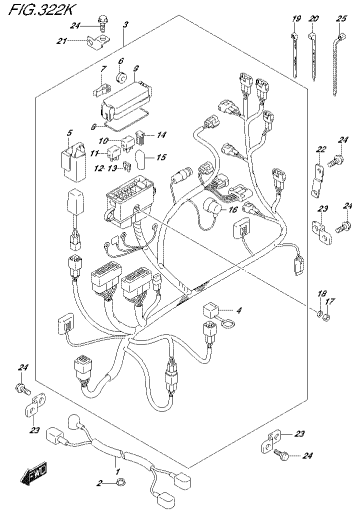

DF90A_E01_01K_322K
HARNESS

FIG.322L

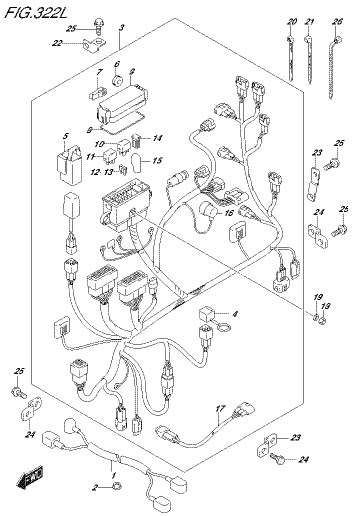

DF90A_E01_01K_322L
HARNESS

FIG.322M

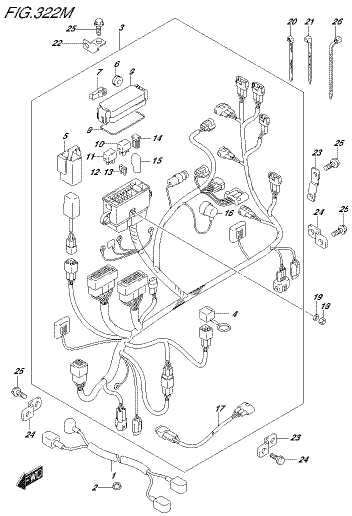

DF90A_E01_01K_322M
HARNESS

FIG.322N

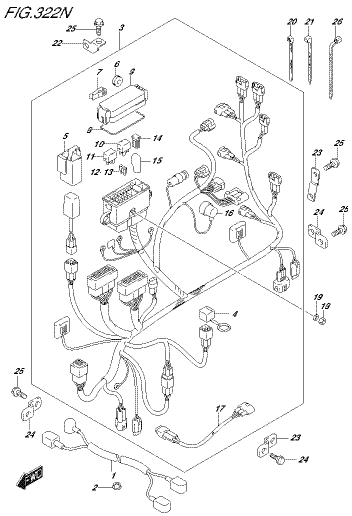

DF90A_E01_01K_322N
HARNESS

FIG.322P

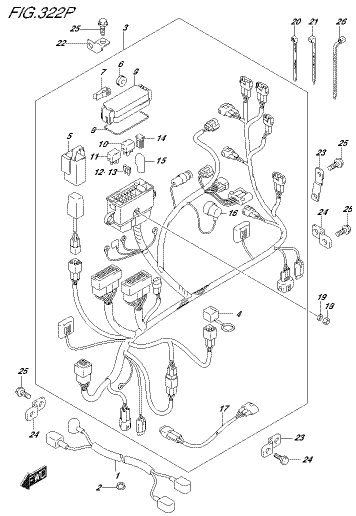

DF90A_E01_01K_322P
HARNESS

FIG.322R

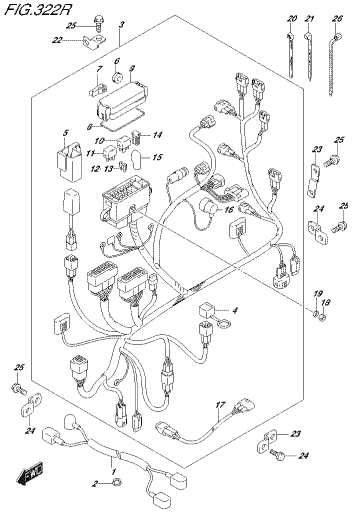

DF90A_E01_01K_322R
HARNESS

FIG.322S

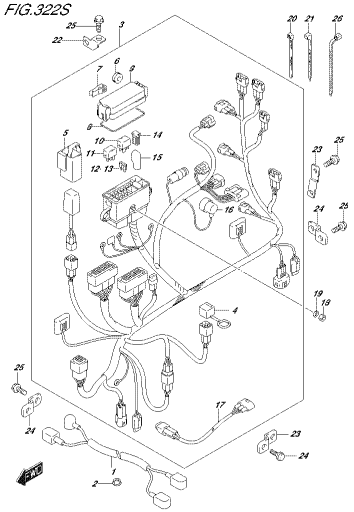

DF90A_E01_01K_322S
HARNESS

FIG.322T

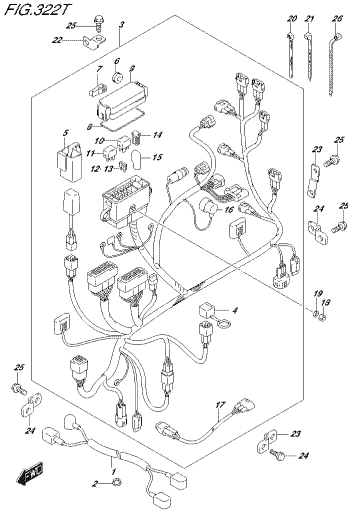

DF90A_E01_01K_322T
HARNESS

FIG.322U

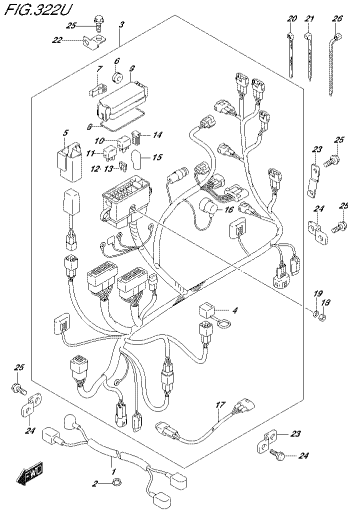

DF90A_E01_01K_322U
HARNESS

FIG.326A

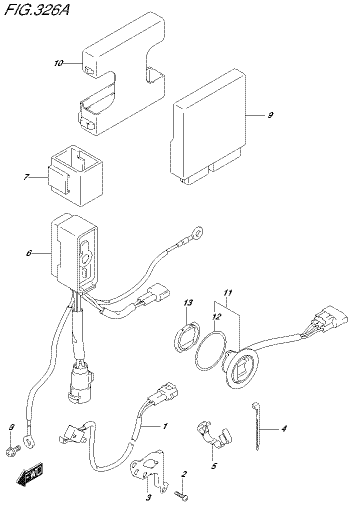

DF90A_E01_01K_326A
PTT SWITCH/ENGINE CONTROL UNIT

FIG.326B

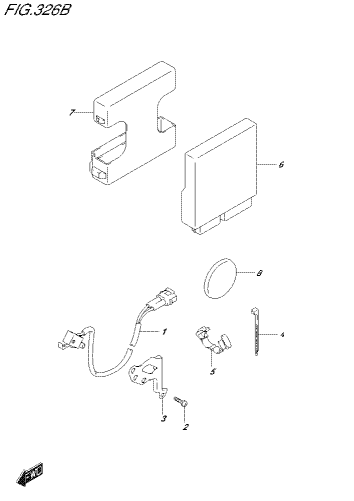

DF90A_E01_01K_326B
PTT SWITCH/ENGINE CONTROL UNIT

FIG.326C

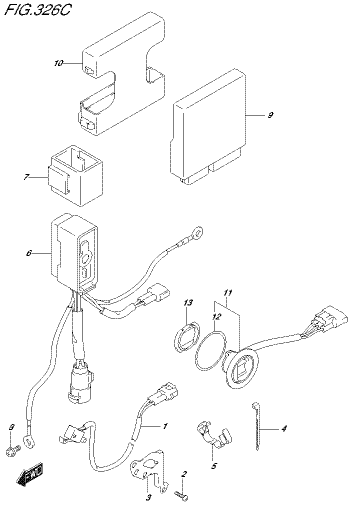

DF90A_E01_01K_326C
PTT SWITCH/ENGINE CONTROL UNIT

FIG.326D

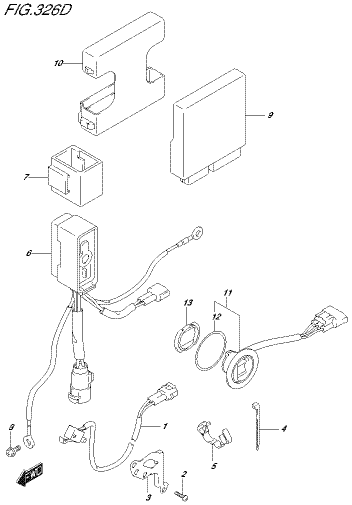

DF90A_E01_01K_326D
PTT SWITCH/ENGINE CONTROL UNIT

FIG.326E

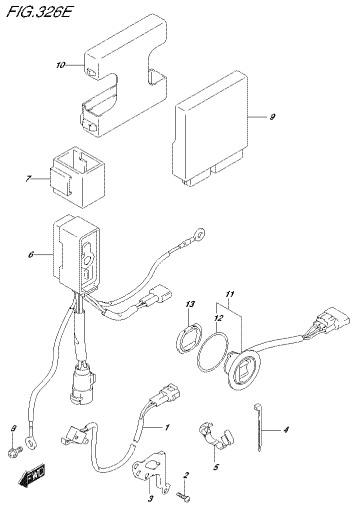

DF90A_E01_01K_326E
PTT SWITCH/ENGINE CONTROL UNIT

FIG.326F

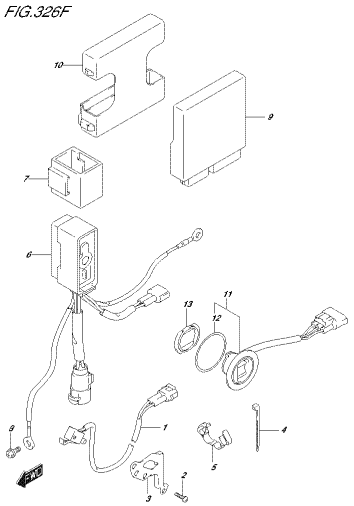

DF90A_E01_01K_326F
PTT SWITCH/ENGINE CONTROL UNIT

FIG.326G

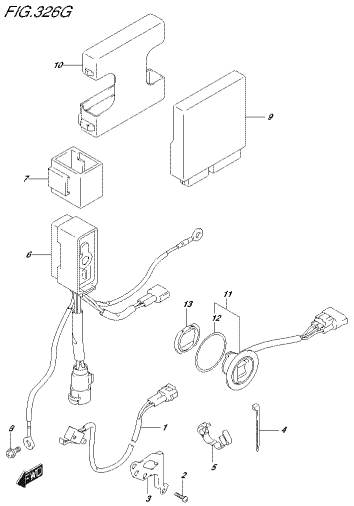

DF90A_E01_01K_326G
PTT SWITCH/ENGINE CONTROL UNIT

FIG.326H

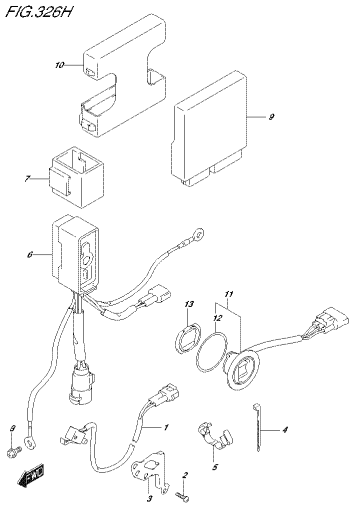

DF90A_E01_01K_326H
PTT SWITCH/ENGINE CONTROL UNIT

FIG.326J

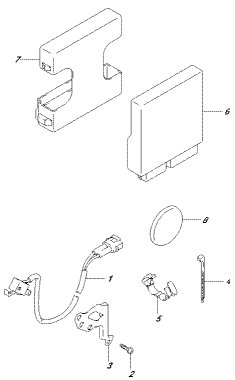

DF90A_E01_01K_326J
PTT SWITCH/ENGINE CONTROL UNIT

FIG.326K

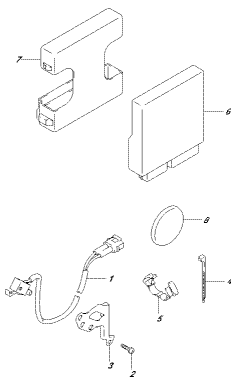

DF90A_E01_01K_326K
PTT SWITCH/ENGINE CONTROL UNIT

FIG.326L

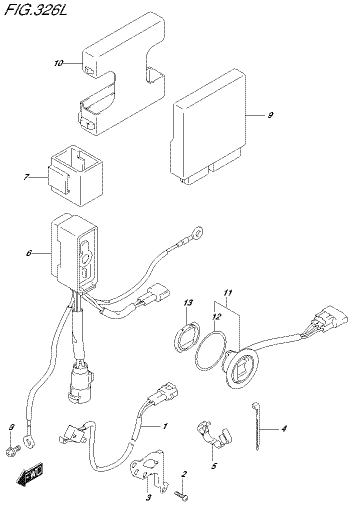

DF90A_E01_01K_326L
PTT SWITCH/ENGINE CONTROL UNIT

FIG.326M

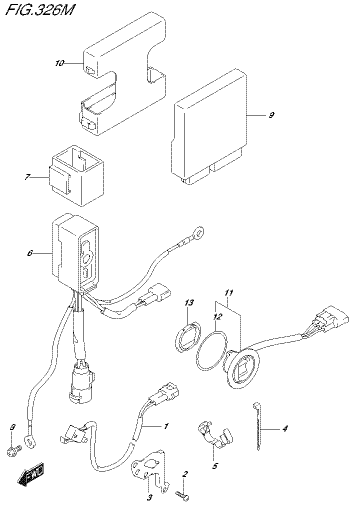

DF90A_E01_01K_326M
PTT SWITCH/ENGINE CONTROL UNIT

FIG.326N

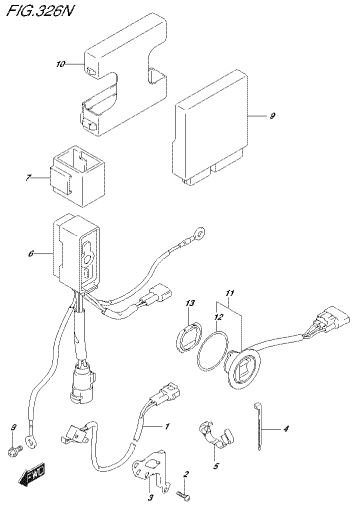

DF90A_E01_01K_326N
PTT SWITCH(ENGINE CONTROL UNIT

FIG.326P

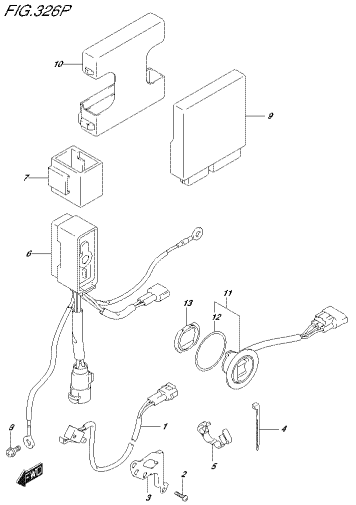

DF90A_E01_01K_326P
PTT SWITCH(ENGINE CONTROL UNIT

FIG.326R

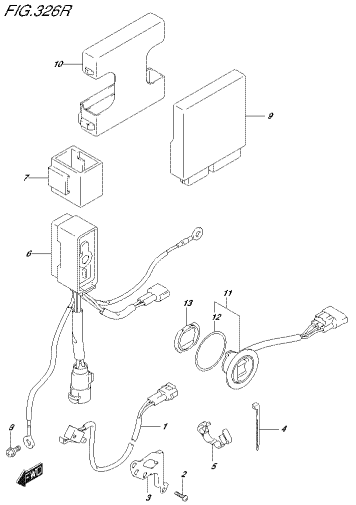

DF90A_E01_01K_326R
PTT SWITCH(ENGINE CONTROL UNIT

FIG.326S

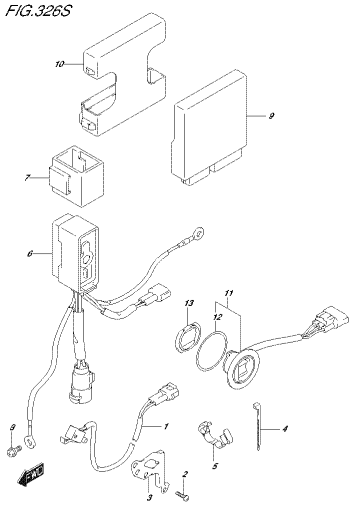

DF90A_E01_01K_326S
PTT SWITCH(ENGINE CONTROL UNIT

FIG.326T

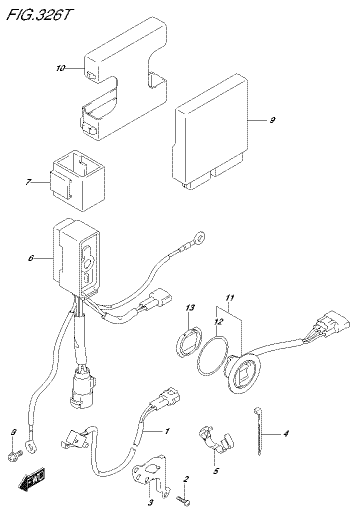

DF90A_E01_01K_326T
PTT SWITCH(ENGINE CONTROL UNIT

FIG.326U

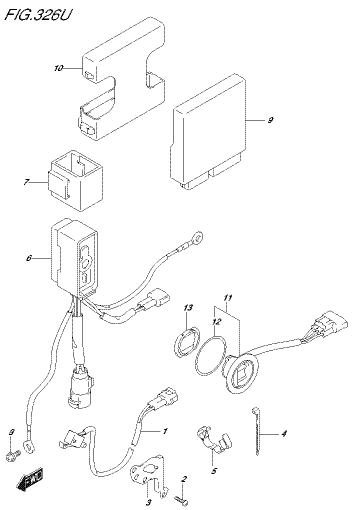

DF90A_E01_01K_326U
PTT SWITCH(ENGINE CONTROL UNIT

FIG.335A

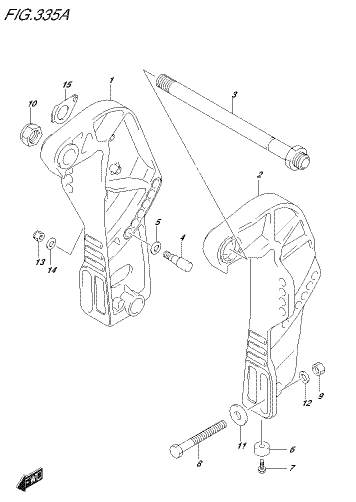

DF90A_E01_01K_335A
CLAMP BRACKET

FIG.335B

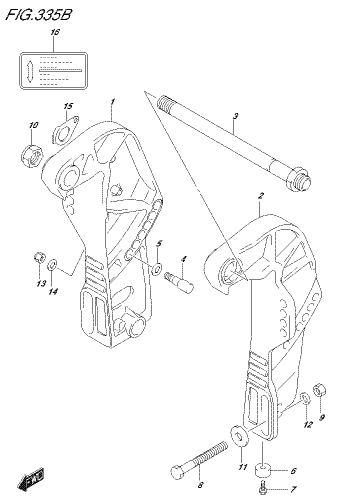

DF90A_E01_01K_335B
CLAMP BRACKET

FIG.335C

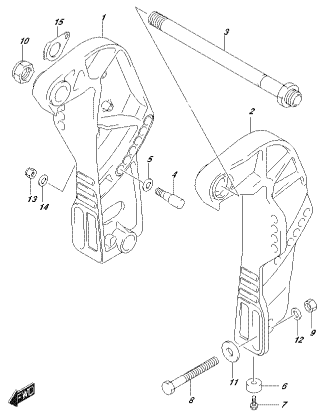

DF90A_E01_016_335C
CLAMP BRACKET

FIG.335D

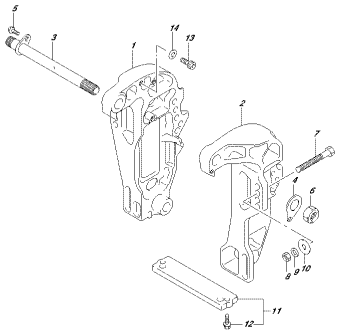

DF90A_E01_016_335D
CLAMP BRACKET

FIG.335E

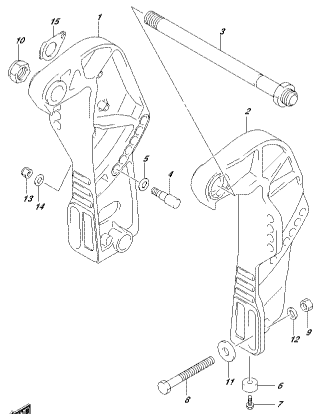

DF90A_E01_016_335E
CLAMP BRACKET

FIG.335F

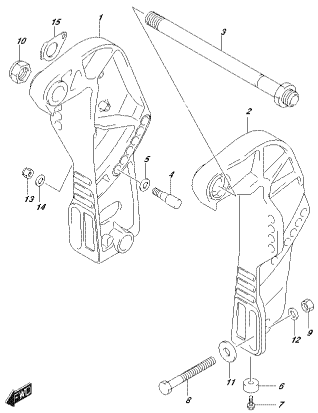

DF90A_E01_016_335F
CLAMP BRACKET

FIG.335G

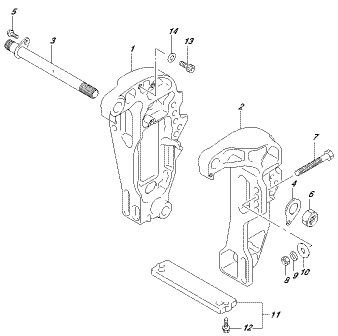

DF90A_E01_016_335G
CLAMP BRACKET

FIG.335H

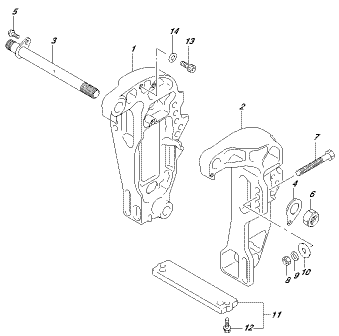

DF90A_E01_016_335H
CLAMP BRACKET

FIG.335J

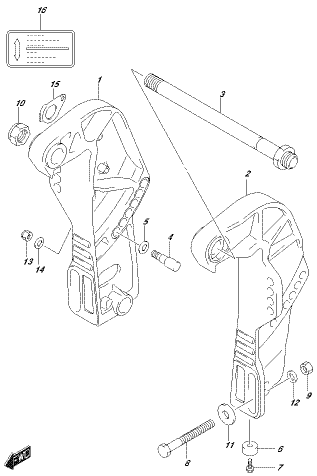

DF90A_E01_016_335J
CLAMP BRACKET

FIG.335K

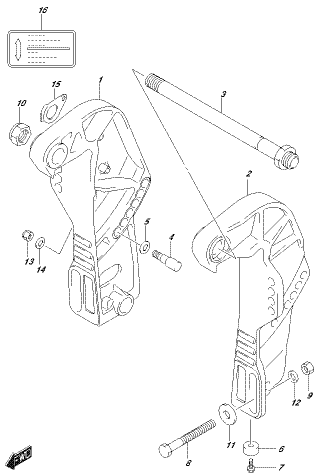

DF90A_E01_016_335K
CLAMP BRACKET

FIG.335L

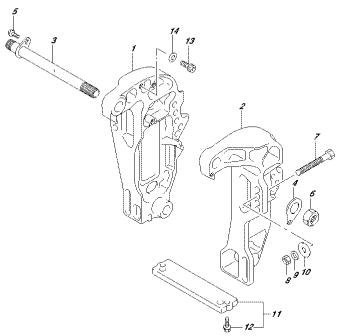

DF90A_E01_01K_335L
CLAMP BRACKET

FIG.335M

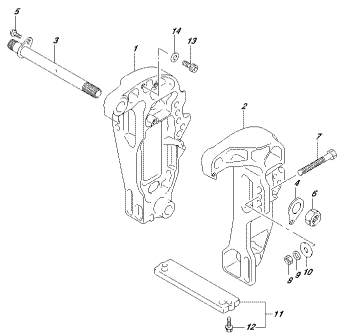

DF90A_E01_01K_335M
CLAMP BRACKET

FIG.335N

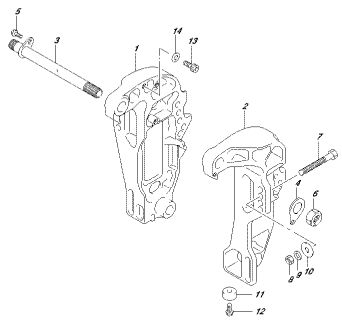

DF90A_E01_01K_335N
CLAMP BRACKET

FIG.335P

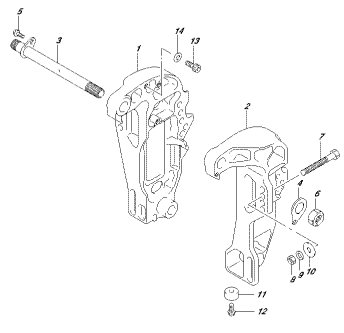

DF90A_E01_01K_335P
CLAMP BRACKET

FIG.335R

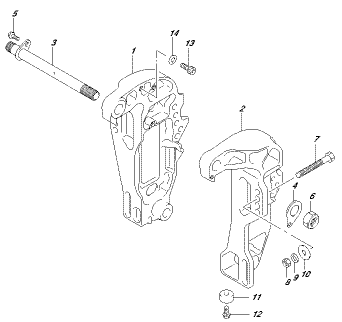

DF90A_E01_01K_335R
CLAMP BRACKET

FIG.335S

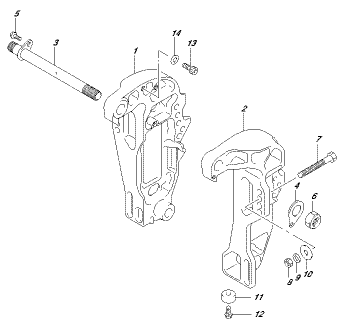

DF90A_E01_01K_335S
CLAMP BRACKET

FIG.335T

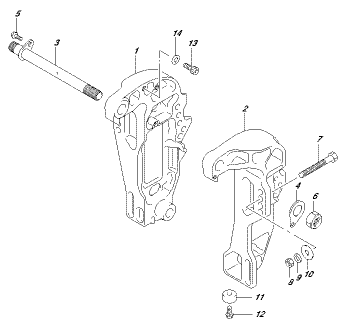

DF90A_E01_01K_335T
CLAMP BRACKET

FIG.335U

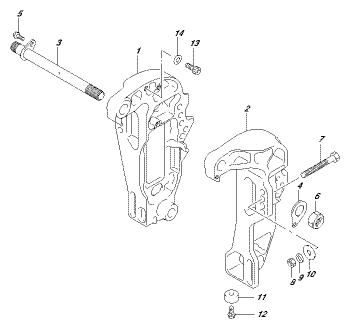

DF90A_E01_01K_335U
CLAMP BRACKET

FIG.336A

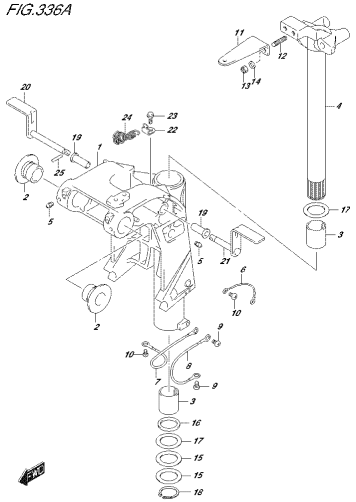

DF90A_E01_01B_336A
SWIVEL BRACKET

FIG.336B

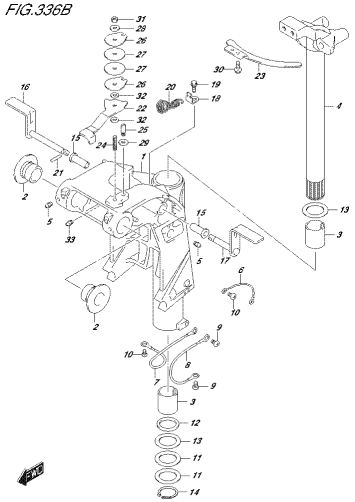

DF90A_E01_01B_336B
SWIVEL BRACKET

FIG.336C

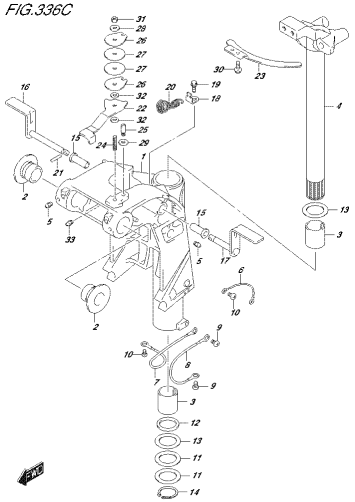

DF90A_E01_01B_336C
SWIVEL BRACKET

FIG.336D

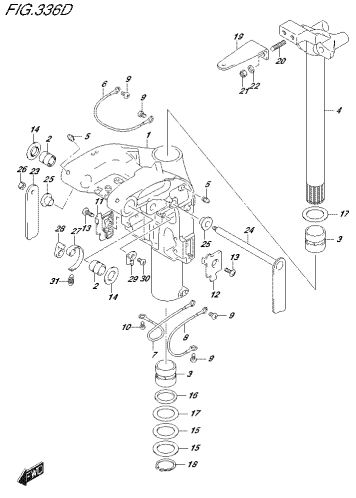

DF90A_E01_01B_336D
SWIVEL BRACKET

FIG.336E

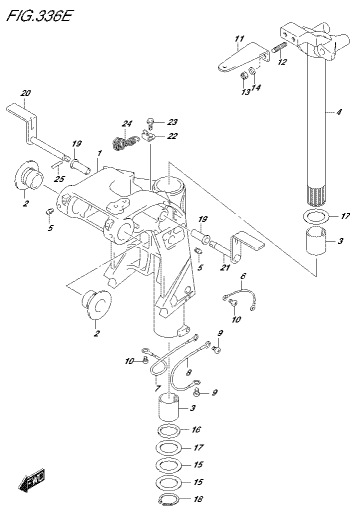

DF90A_E01_01B_336E
SWIVEL BRACKET

FIG.336F

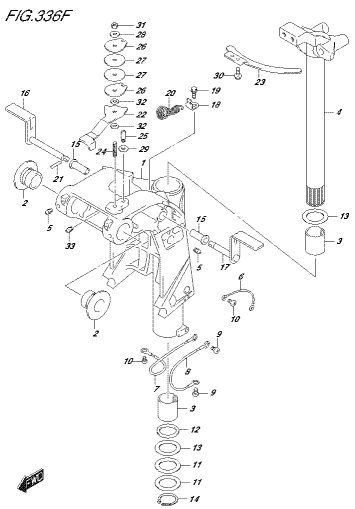

DF90A_E01_01B_336F
SWIVEL BRACKET

FIG.336G

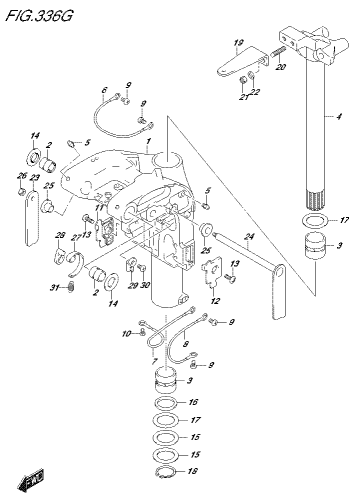

DF90A_E01_01B_336G
SWIVEL BRACKET

FIG.336H

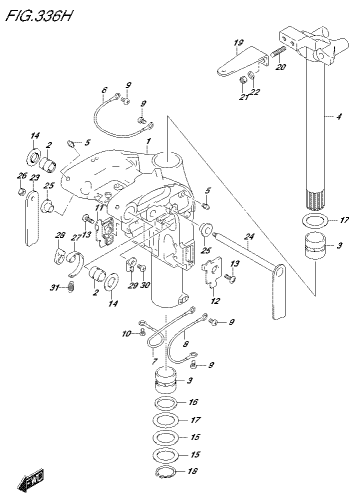

DF90A_E01_01B_336H
SWIVEL BRACKET

FIG.336J

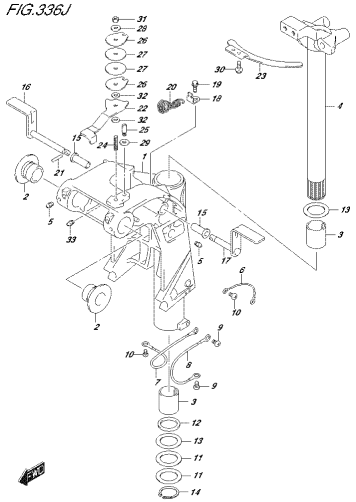

DF90A_E01_01K_336J
SWIVEL BRACKET

FIG.336K

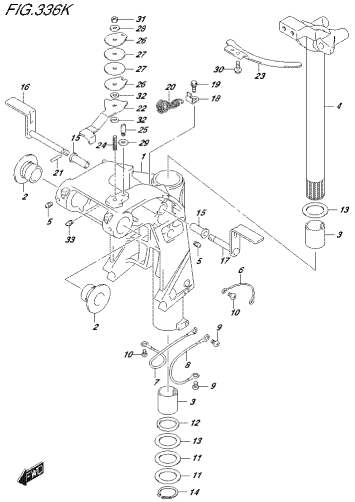

DF90A_E01_01K_336K
SWIVEL BRACKET

FIG.336L

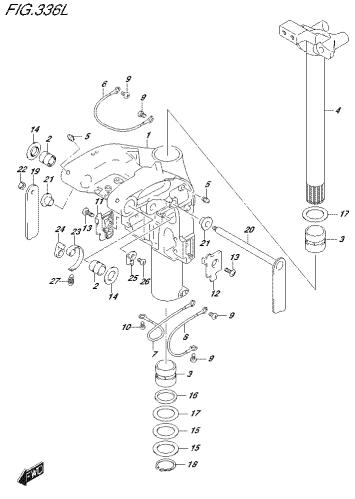

DF90A_E01_01K_336L
SWIVEL BRACKET

FIG.336M

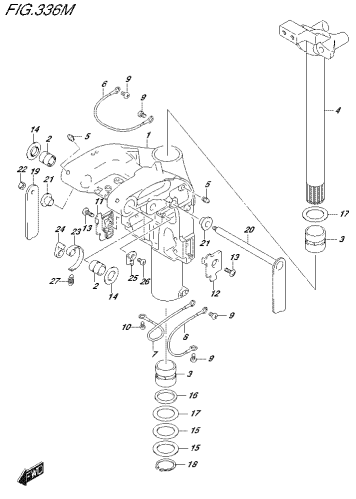

DF90A_E01_01K_336M
SWIVEL BRACKET

FIG.336N

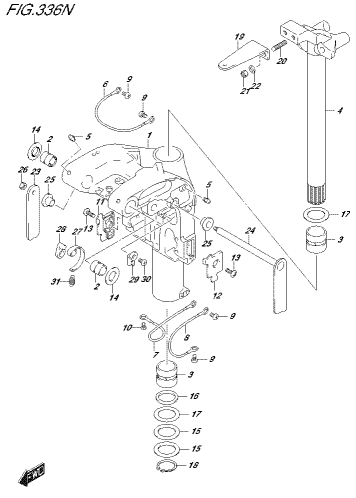

DF90A_E01_01K_336N
SWIVEL BRACKET

FIG.336P

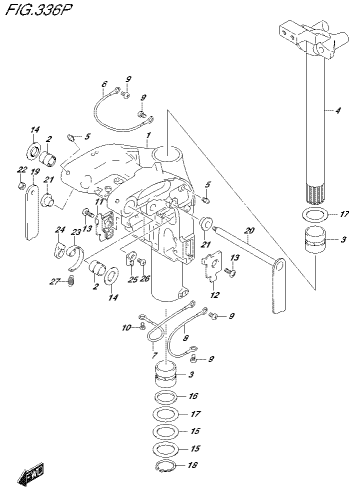

DF90A_E01_01K_336P
SWIVEL BRACKET

FIG.336R

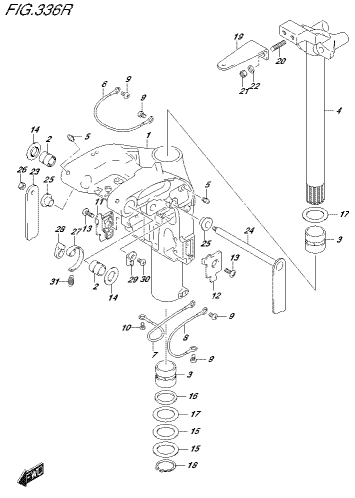

DF90A_E01_01K_336R
SWIVEL BRACKET

FIG.336S

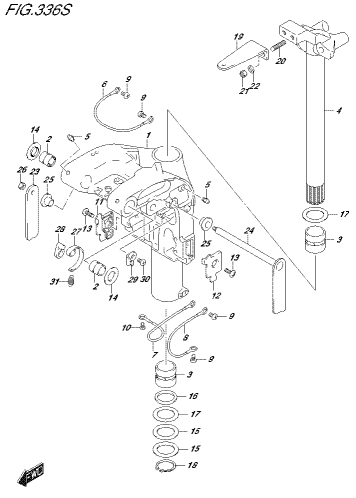

DF90A_E01_01K_336S
SWIVEL BRACKET

FIG.336T

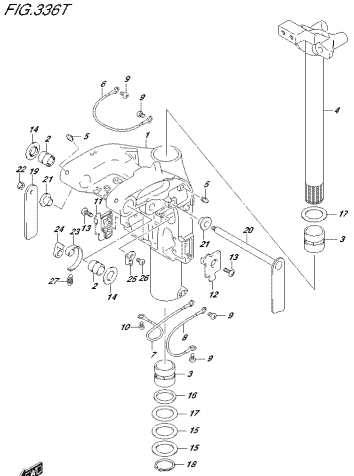

DF60A_E01_016_336T
SWIVEL BRACKET

FIG.336U

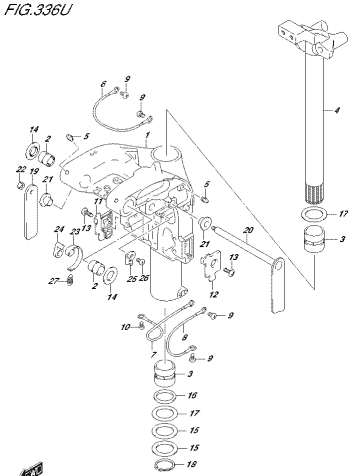

DF60A_E01_016_336U
SWIVEL BRACKET

FIG.337A

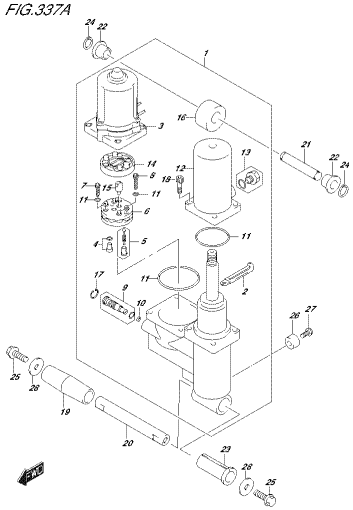

DF60A_E01_016_337A
TRIM CYLINDER

FIG.337B

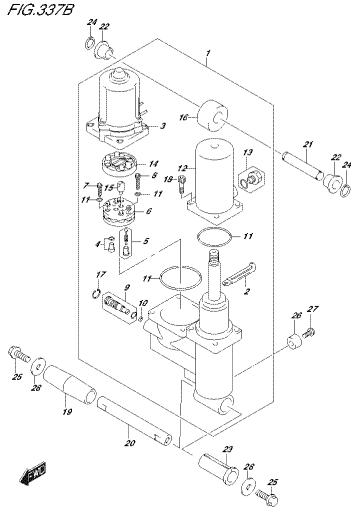

DF60A_E01_016_337B
TRIM CYLINDER

FIG.337C

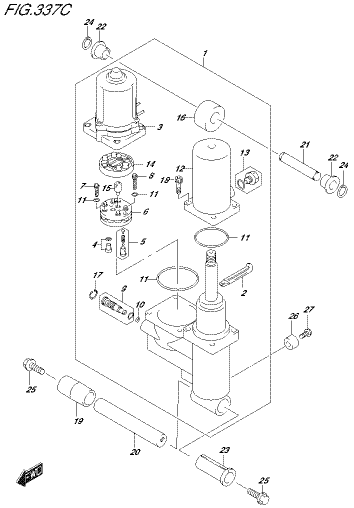

DF60A_E01_016_337C
TRIM CYLINDER

FIG.337D

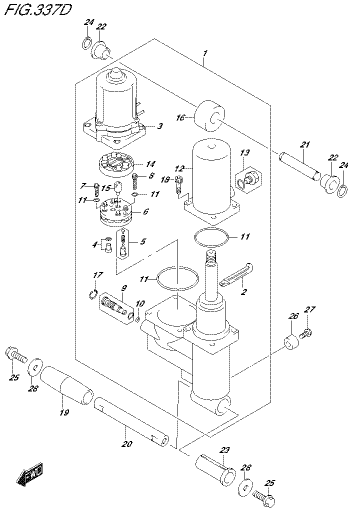

DF60A_E01_016_337D
TRIM CYLINDER

FIG.337E

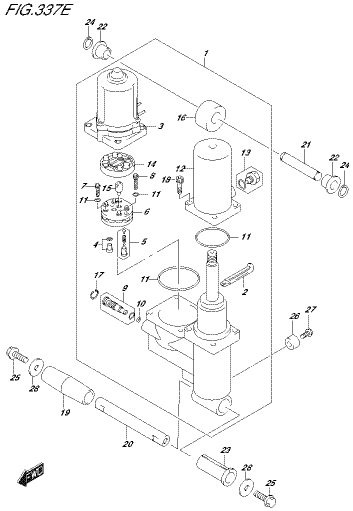

DF60A_E01_016_337E
TRIM CYLINDER

FIG.337F

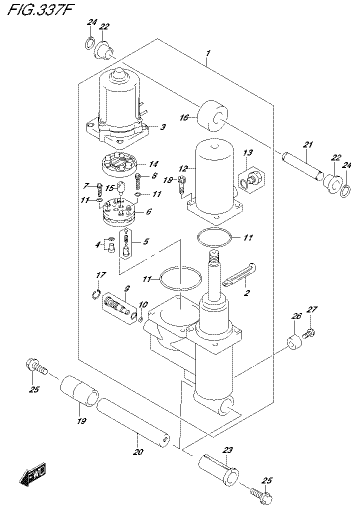

DF60A_E01_016_337F
TRIM CYLINDER

FIG.337G

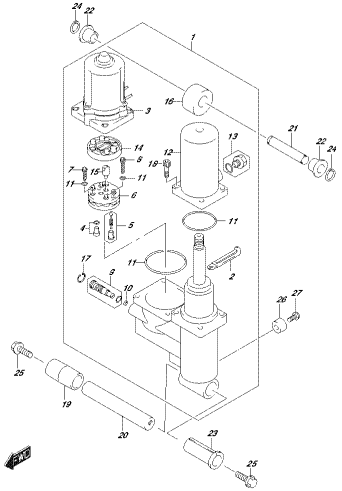

DF90A_E01_01K_337G
TRIM CYLINDER

FIG.337H

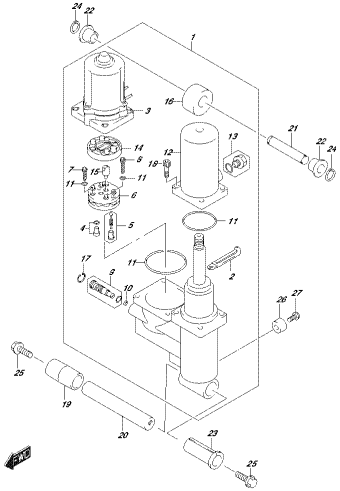

DF90A_E01_01K_337H
TRIM CYLINDER

FIG.337J

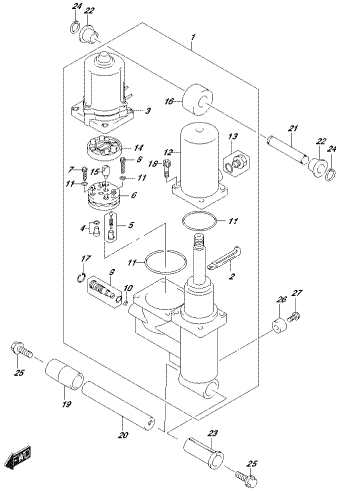

DF90A_E01_01K_337J
TRIM CYLINDER

FIG.337K

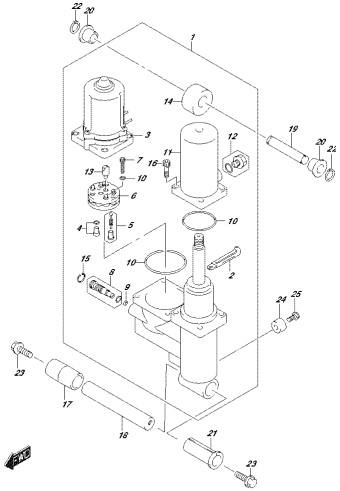

DF90A_E01_01K_337K
TRIM CYLINDER

FIG.337L

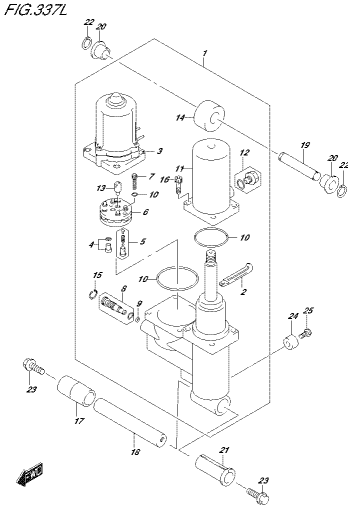

DF90A_E01_01K_337L
TRIM CYLINDER

FIG.337M

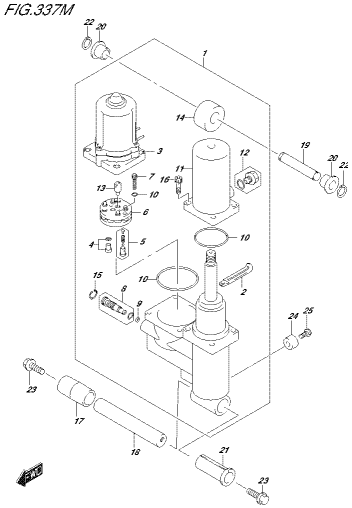

DF90A_E01_01K_337M
TRIM CYLINDER

FIG.337N

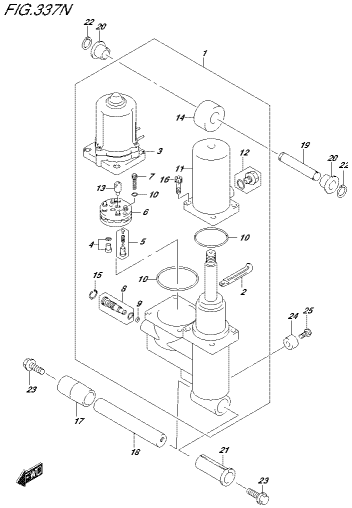

DF90A_E01_01K_337N
TRIM CYLINDER

FIG.337P

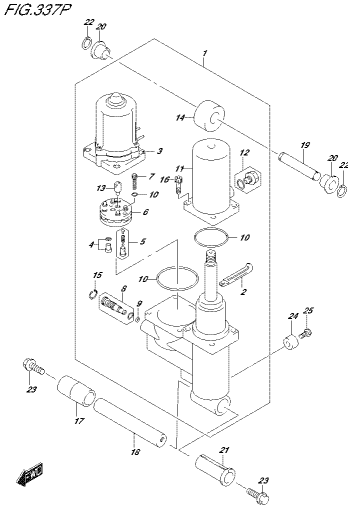

DF90A_E01_01K_337P
TRIM CYLINDER

FIG.337R

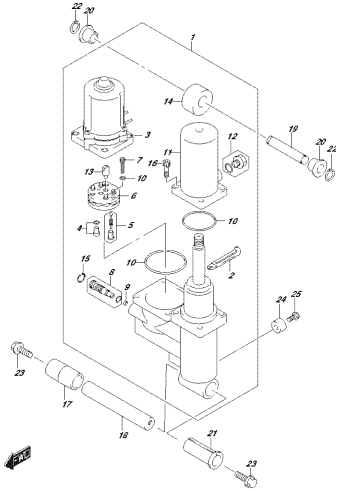

DF60A_E01_016_337R
TRIM CYLINDER

FIG.339A

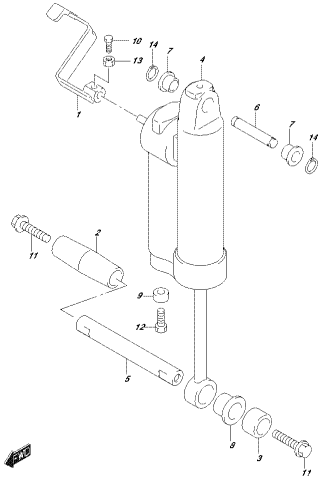

DF60A_E01_016_339A
GAS CYLINDER

FIG.339B

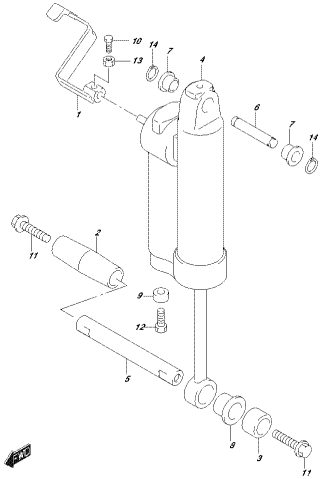

DF60A_E01_016_339B
GAS CYLINDER

FIG.339C

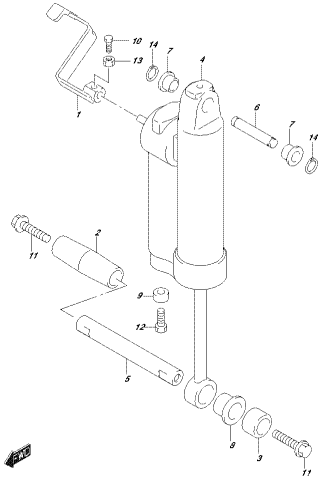

DF60A_E01_016_339C
GAS CYLINDER

FIG.340A

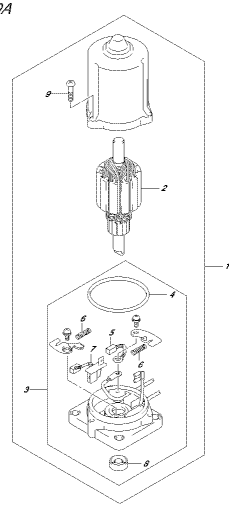

DF60A_E01_016_340A
PTT MOTOR

FIG.340B

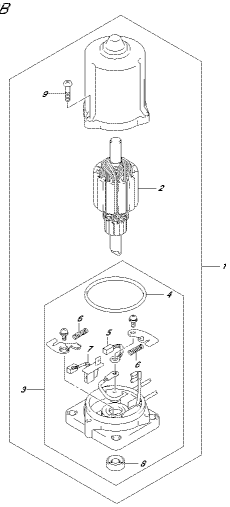

DF60A_E01_016_340B
PTT MOTOR

FIG.340C

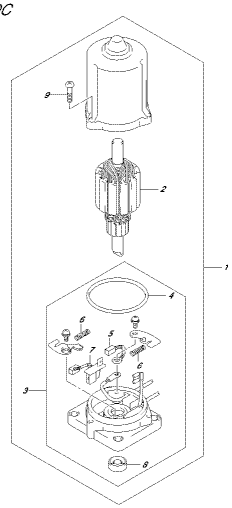

DF60A_E01_016_340C
PTT MOTOR

FIG.340D

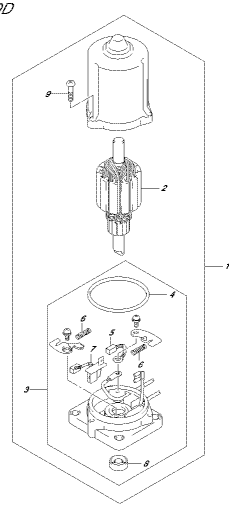

DF60A_E01_016_340D
PTT MOTOR

FIG.340E

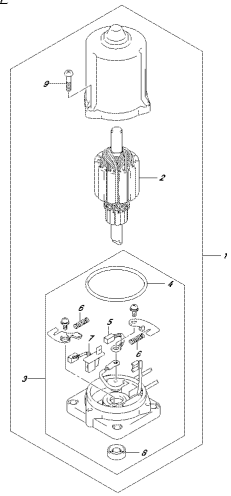

DF8RA_E01_01B_340E
PIT MOTOR

FIG.340F

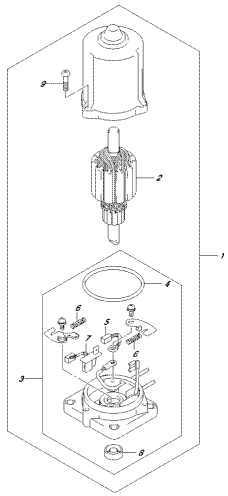

DF8RA_E01_01B_340F
PIT MOTOR

FIG.340G

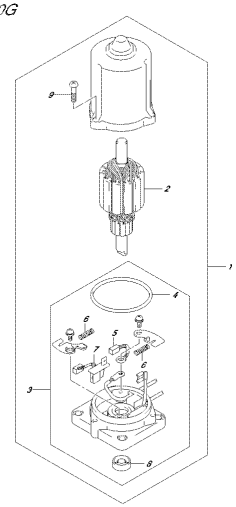

DF8RA_E01_01B_340G
PIT MOTOR

FIG.340H

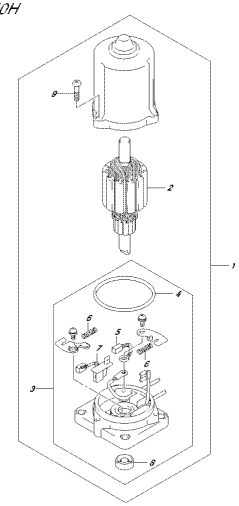

DF8RA_E01_01B_340H
PIT MOTOR

FIG.340J

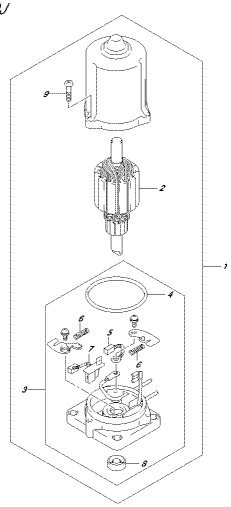

DF8RA_E01_01B_340J
PIT MOTOR

FIG.340K

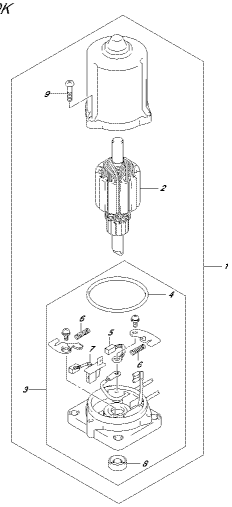

DF8RA_E01_01B_340K
PIT MOTOR

FIG.340L

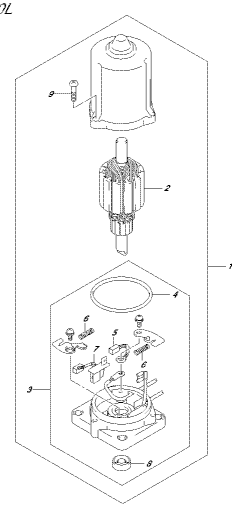

DF8RA_E01_01B_340L
PIT MOTOR

FIG.340M

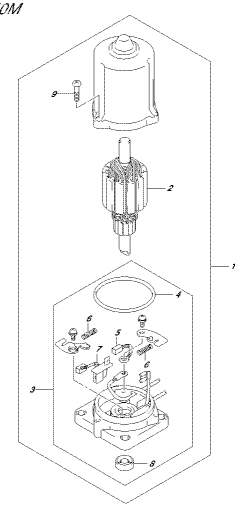

DF8RA_E01_01B_340M
PIT MOTOR

FIG.340N

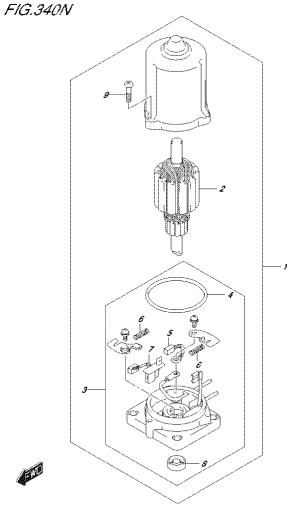

DF8RA_E01_01B_340N
PIT MOTOR

FIG.340P

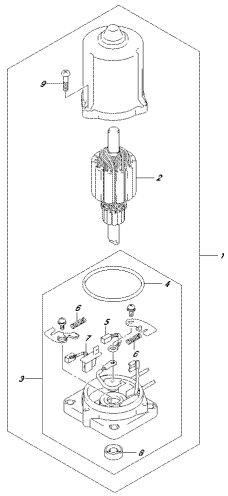

DF8RA_E01_01B_340P
PIT MOTOR

FIG.340R

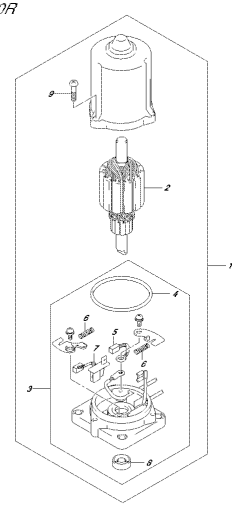

DF8RA_E01_01B_340R
PIT MOTOR

FIG.401A

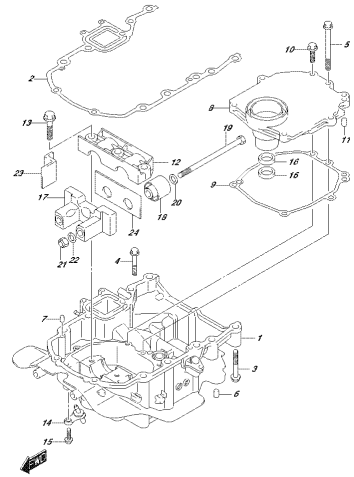

DF8RA_E01_01B_401A
ENGINE HOLDER

FIG.401B

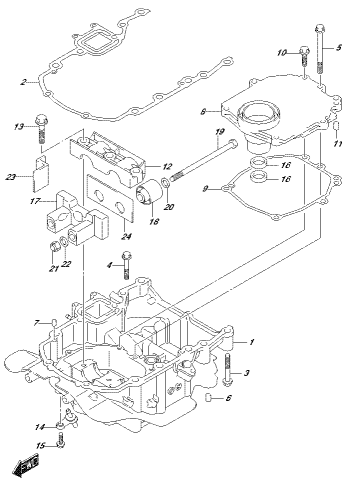

DF8RA_E01_01B_401B
ENGINE HOLDER

FIG.401C

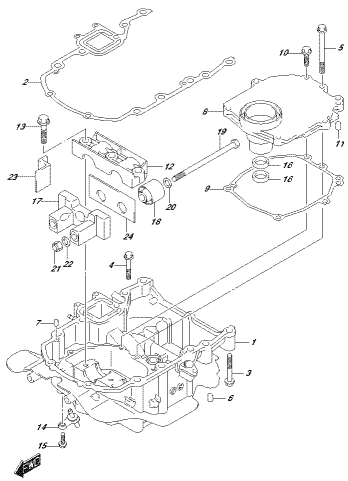

DF8RA_E01_01B_401C
ENGINE HOLDER

FIG.401D

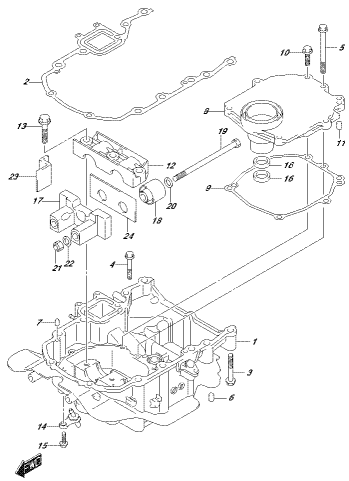

DF8RA_E01_01B_401D
ENGINE HOLDER

FIG.401E

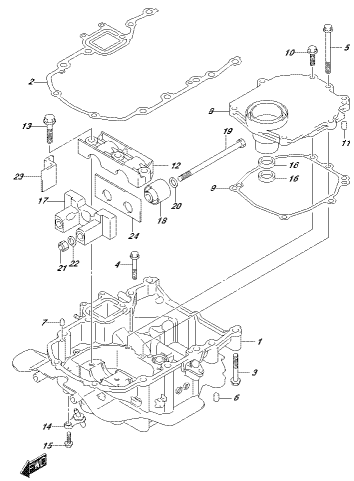

DF8RA_E01_01B_401E
ENGINE HOLDER

FIG.401F

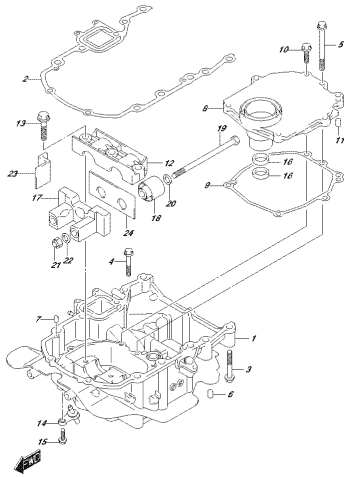

DF90A_E01_01K_401F
ENGINE HOLDER

FIG.401G

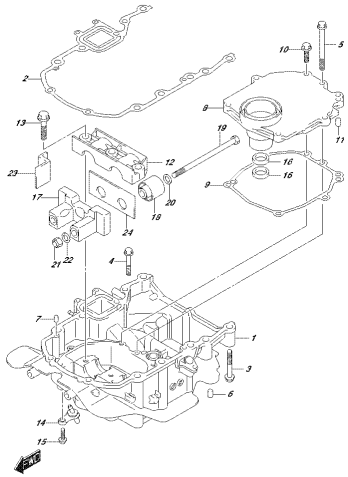

DF90A_E01_01K_401G
ENGINE HOLDER

FIG.401H

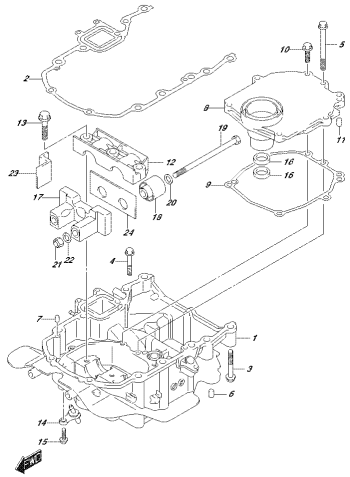

DF90A_E01_01K_401H
ENGINE HOLDER

FIG.401J

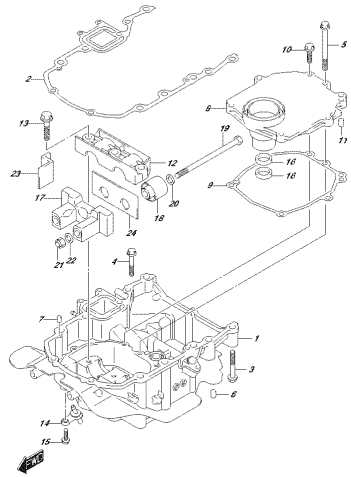

DF90A_E01_01K_401J
ENGINE HOLDER

FIG.401K

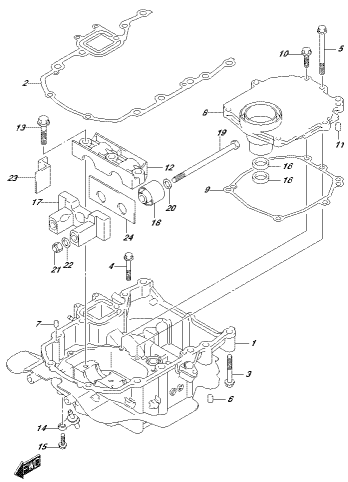

DF90A_E01_01K_401K
ENGINE HOLDER

FIG.401L

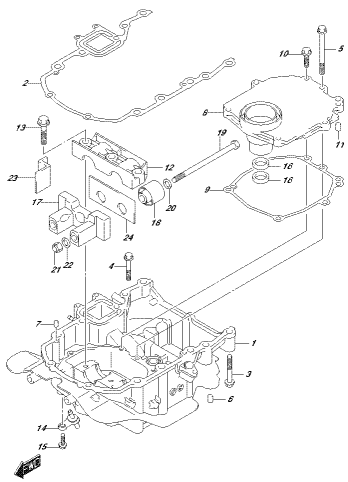

DF90A_E01_01K_401L
ENGINE HOLDER

FIG.401M

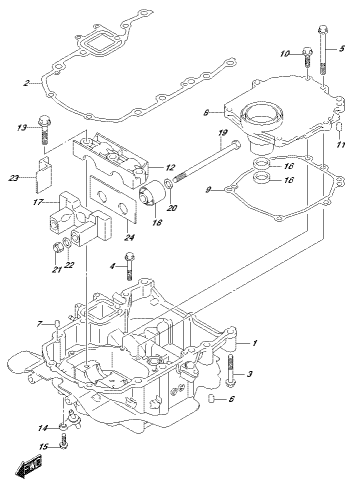

DF90A_E01_01K_401M
ENGINE HOLDER

FIG.401N

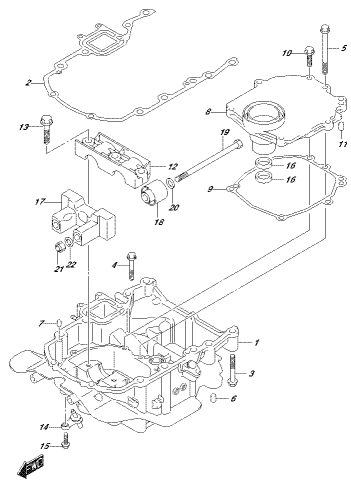

DF90A_E01_01K_401N
ENGINE HOLDER

FIG.401P

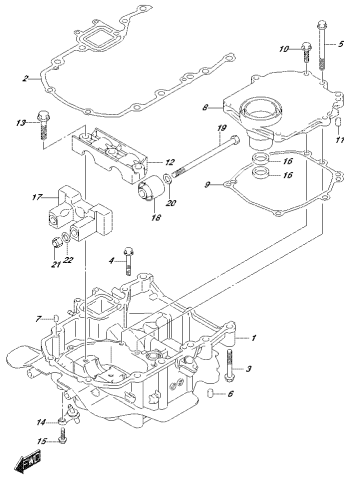

DF90A_E01_01R_401P
ENGINE HOLDER

FIG.401R

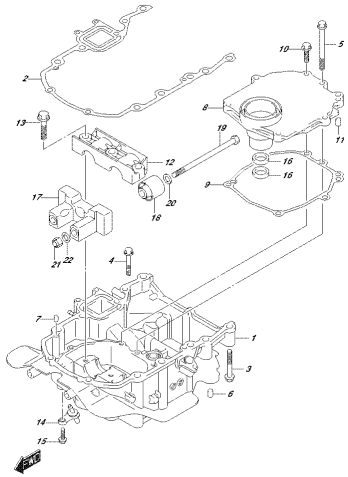

DF90A_E01_01R_401R
ENGINE HOLDER

FIG.401S

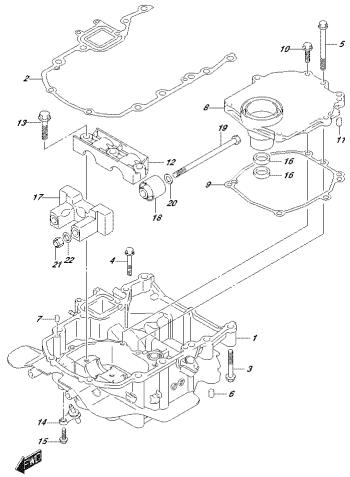

DF90A_E01_01R_401S
ENGINE HOLDER

FIG.401T

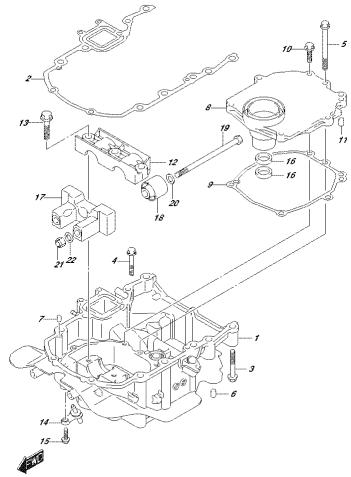

DF90A_E01_01R_401T
ENGINE HOLDER

FIG.401U

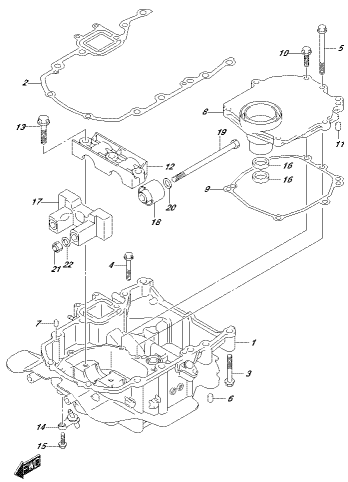

DF90A_E01_01R_401U
ENGINE HOLDER

FIG.405A

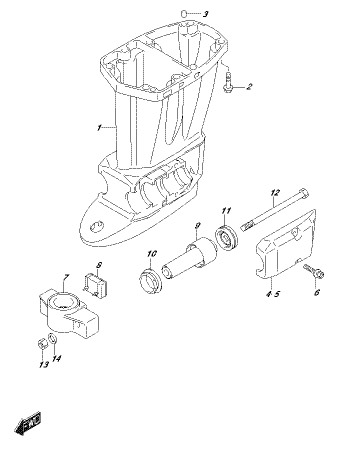

DF90A_E01_01R_405A
DRIVE SHAFT HOUSING

FIG.405B

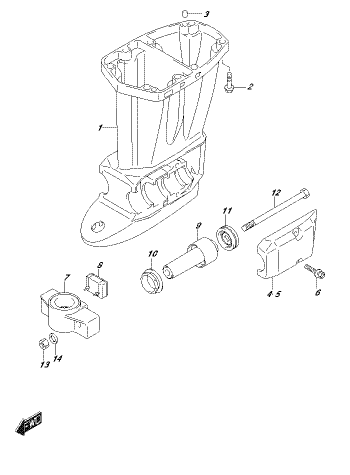

DF90A_E01_01R_405B
DRIVE SHAFT HOUSING

FIG.405C

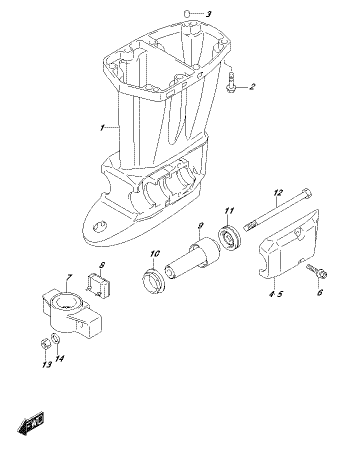

DF90A_E01_01R_405C
DRIVE SHAFT HOUSING

FIG.405D

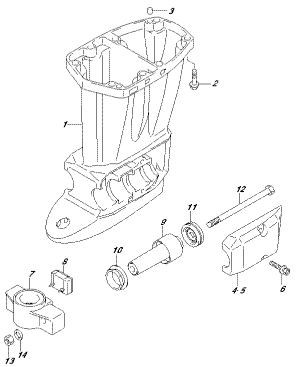

FWD

DF90A_E01_01R_405D
DRIVE SHAFT HOUSING

FIG.405E

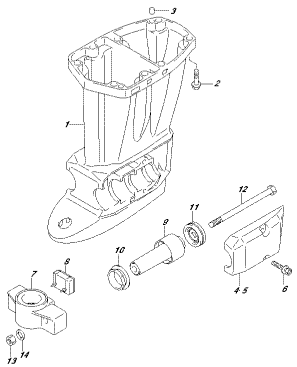

FWD

DF90A_E01_01R_405E
DRIVE SHAFT HOUSING

FIG.405F

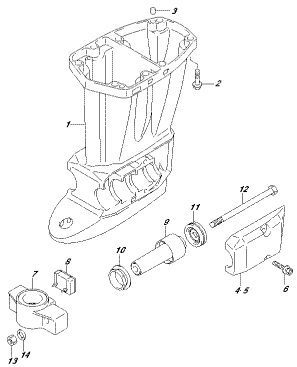

FWD

DF90A_E01_01R_405F
DRIVE SHAFT HOUSING

FIG.405G

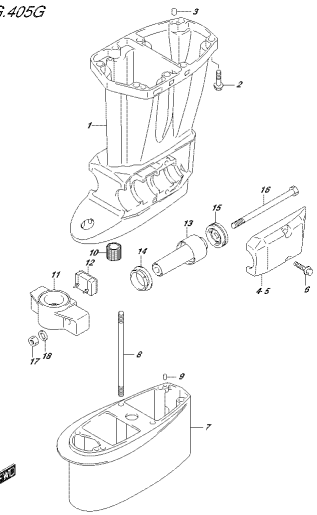

FWD

DF90A_E01_01R_405G
DRIVE SHAFT HOUSING

FIG.405H

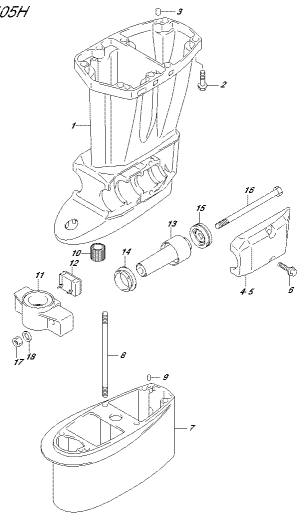

FWD

DF90A_E01_01R_405H
DRIVE SHAFT HOUSING

FIG.405J

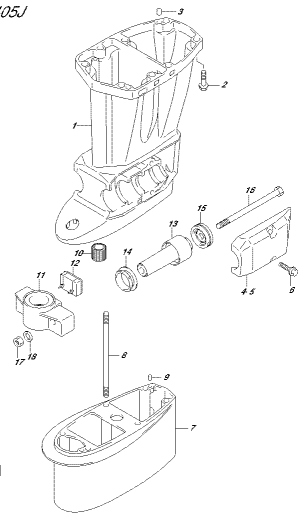

FWD

DF90A_E01_01R_405J
DRIVE SHAFT HOUSING

FIG.405K

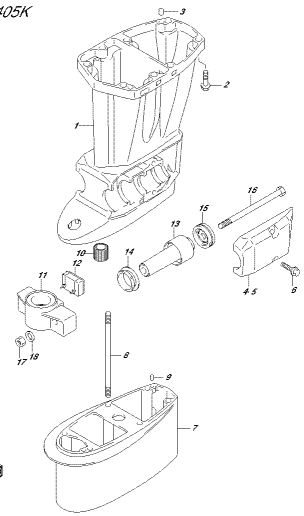

FWD

DF90A_E01_01R_405K
DRIVE SHAFT HOUSING

FIG.405L

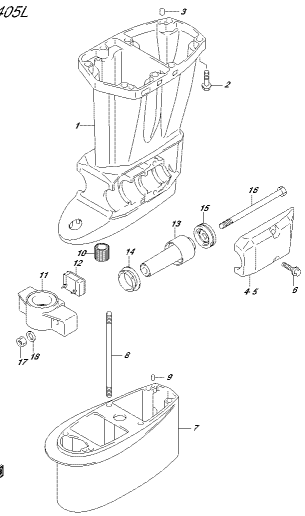

FWD

DF90A_E01_01R_405L
DRIVE SHAFT HOUSING

FIG.405M

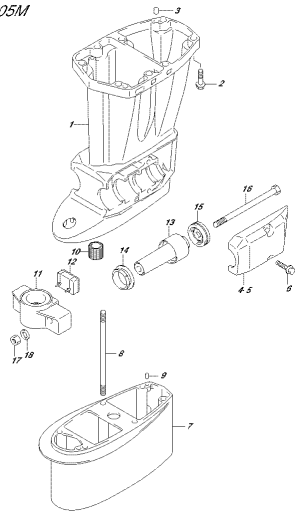

DF90A_E01_01R_405M
DRIVE SHAFT HOUSING

FIG.405N

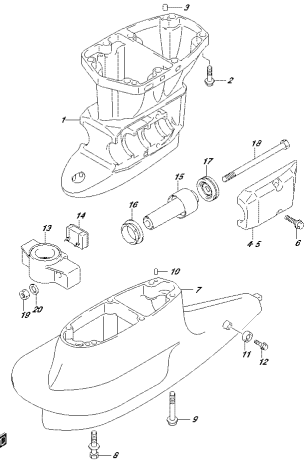

DF90A_E01_01R_405N
DRIVE SHAFT HOUSING

FIG.405P

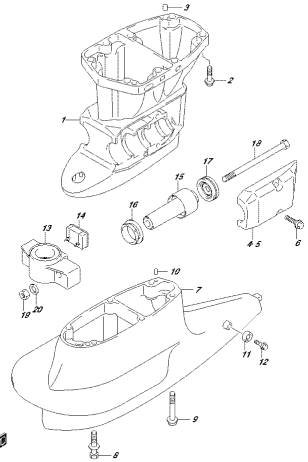

DF90A_E01_01R_405P
DRIVE SHAFT HOUSING

FIG.405R

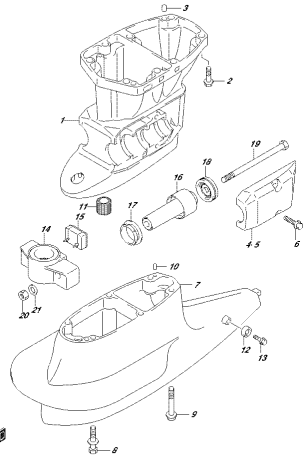

DF90A_E01_01R_405R
DRIVE SHAFT HOUSING

FIG.405S

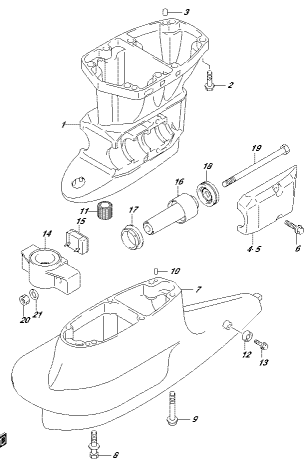

DF90A_E01_01R_405S
DRIVE SHAFT HOUSING

FIG.405T

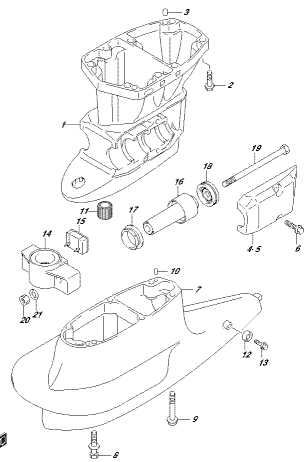

DF90A_E01_01R_405T
DRIVE SHAFT HOUSING

FIG.405U

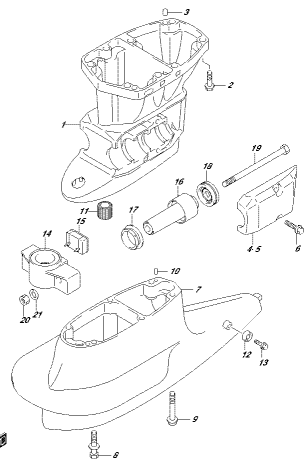

DF90A_E01_01R_405U
DRIVE SHAFT HOUSING

FIG.407A

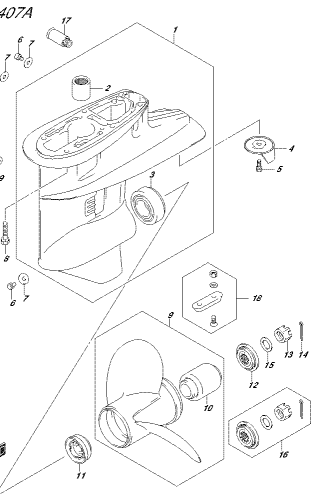

DF90A_E01_01R_407A
GEAR CASE

FIG.407B

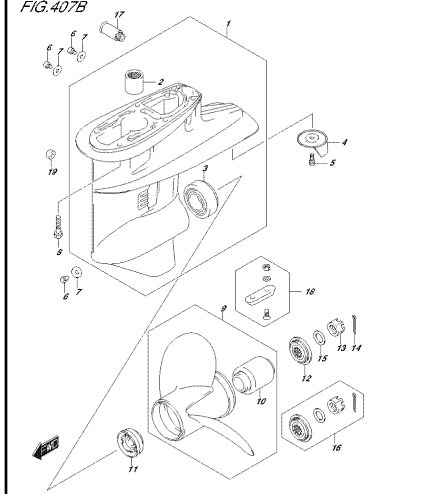

DF60A_E01_01B_407B
GEAR CASE

FIG.407C

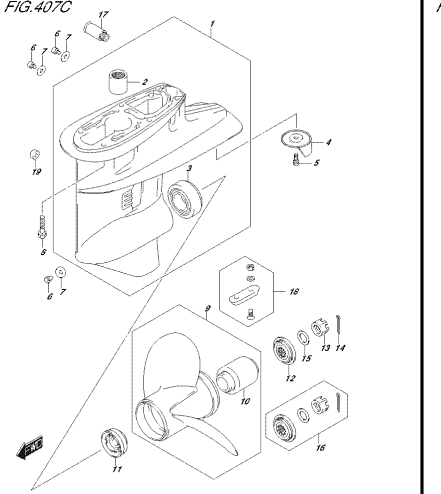

DF60A_E01_01B_407C
GEAR CASE

FIG.407D

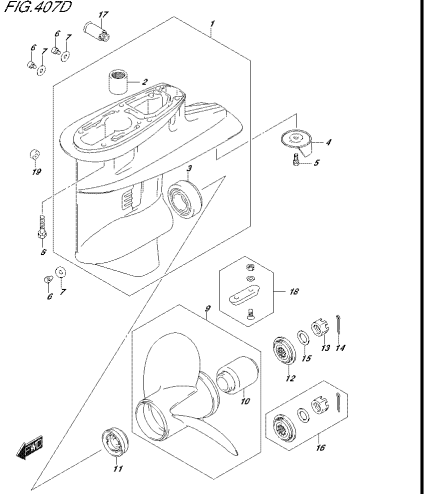

DF60A_E01_01B_407D
GEAR CASE

FIG.407E

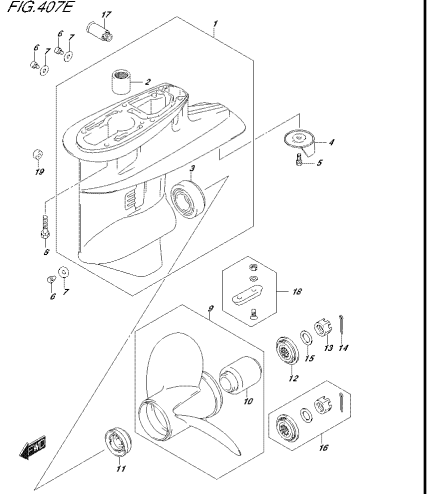

DF60A_E01_01B_407E
GEAR CASE

FIG.407F

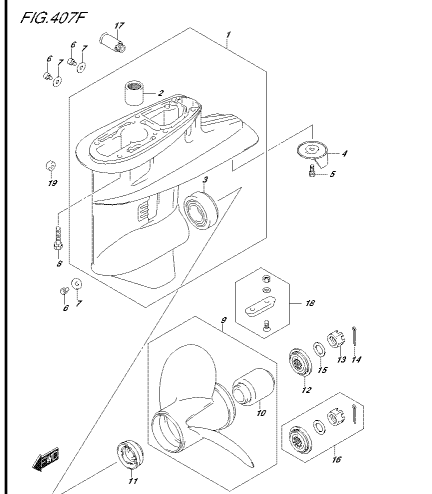

DF60A_E01_01B_407F
GEAR CASE

FIG.407G

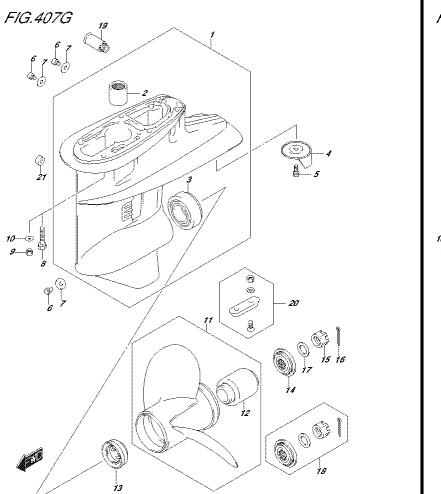

DF60A_E01_01B_407G
GEAR CASE

FIG.407H

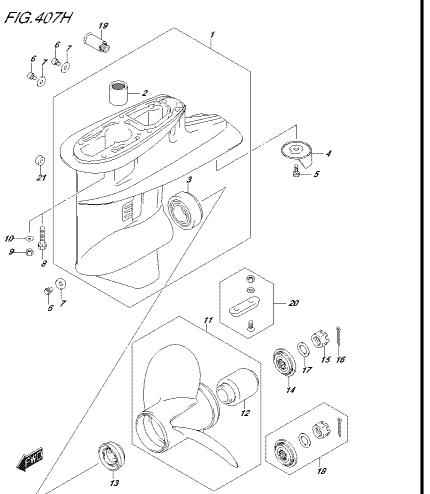

DF60A_E01_01B_407H
GEAR CASE

FIG.407J

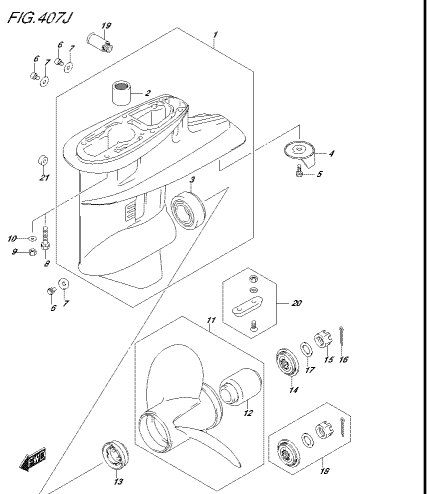

DF60A_E01_01B_407J
GEAR CASE

FIG.407K

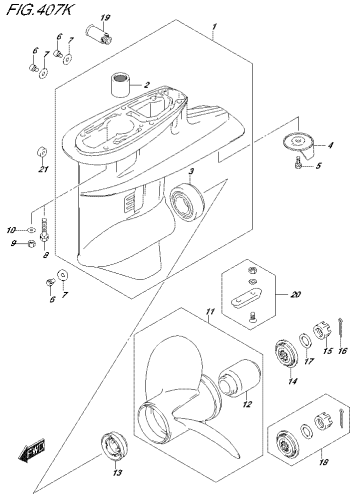

DF60A_E01_01K_407K
GEAR CASE

FIG.407L

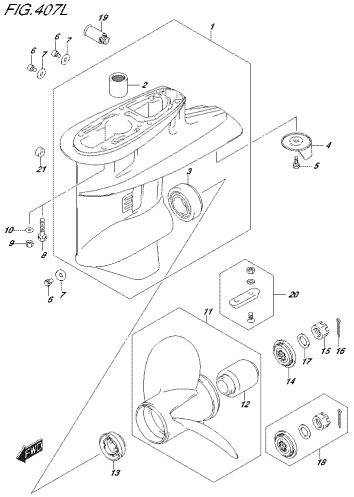

DF60A_E01_01L_407L
GEAR CASE

FIG.407M

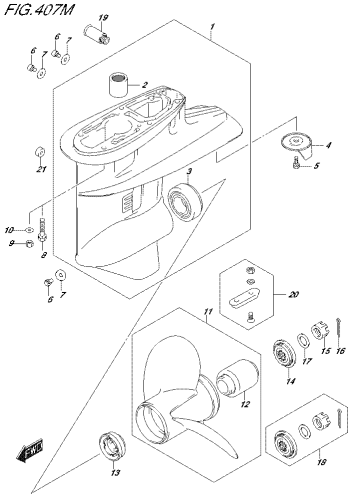

DF60A_E01_01M_407M
GEAR CASE

FIG.407N

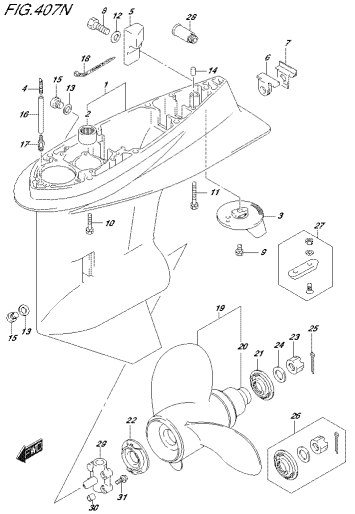

DF60A_E01_01N_407N
GEAR CASE

FIG.407P

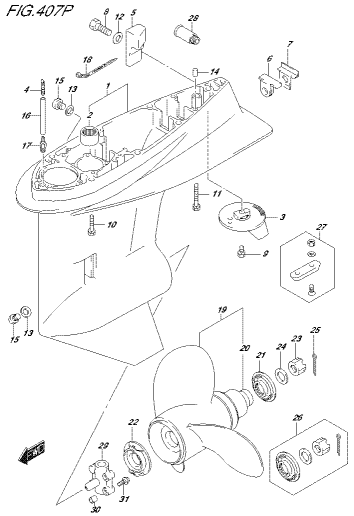

DF60A_E01_01P_407P
GEAR CASE

FIG.407R

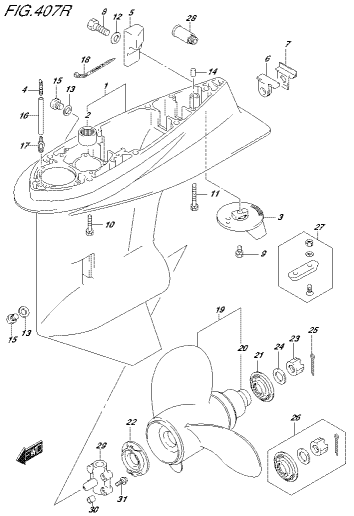

DF60A_E01_01R_407R
GEAR CASE

FIG.407S

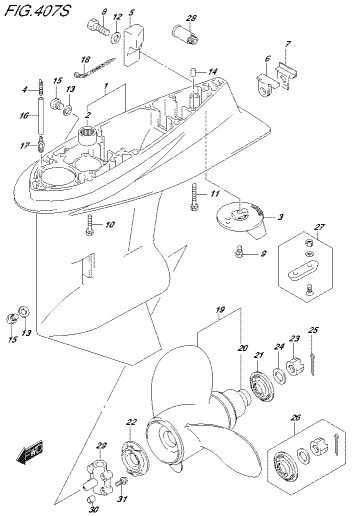

DF60A_E01_01S_407S
GEAR CASE

FIG.407T

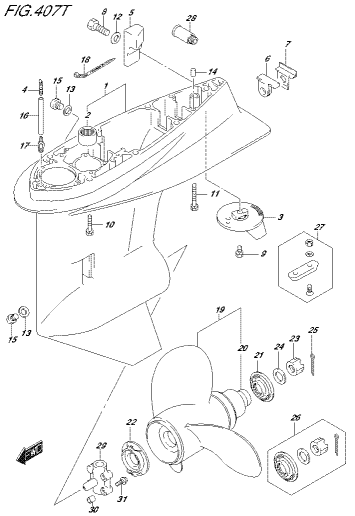

DF60A_E01_01T_407T
GEAR CASE

FIG.407U

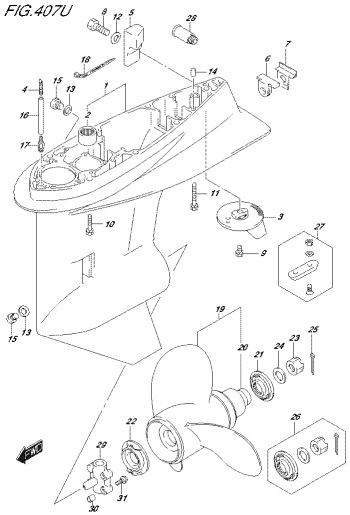

DF90A_E01_01B_407U
GEAR CASE

FIG.410A

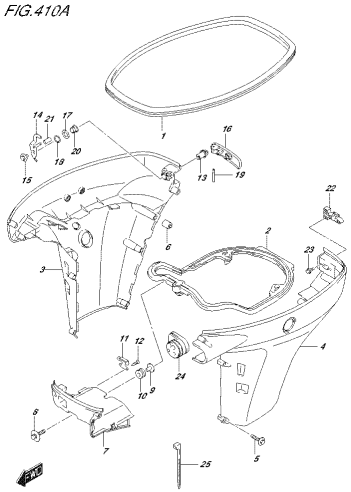

DF90A_E01_01B_410A
SIDE COVER

FIG.410B

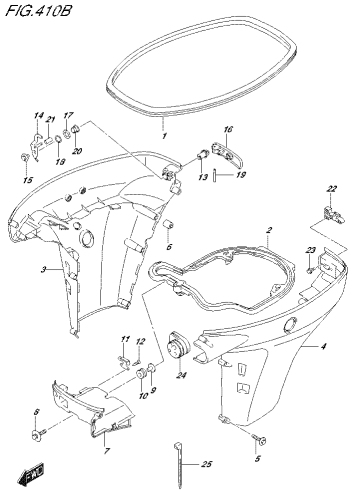

DF90A_E01_01B_410B
SIDE COVER

FIG.410C

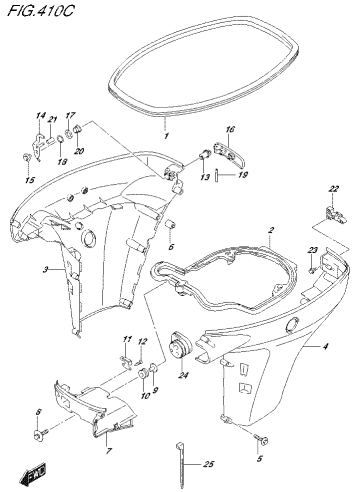

DF90A_E01_01B_410C
SIDE COVER

FIG.410D

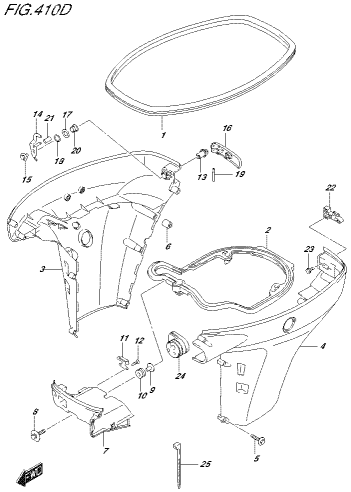

DF90A_E01_01B_410D
SIDE COVER

FIG.410E

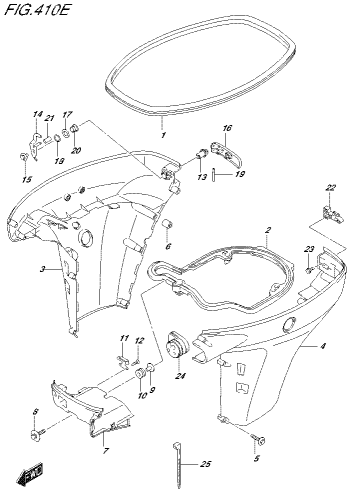

DF90A_E01_01B_410E
SIDE COVER

FIG.410F

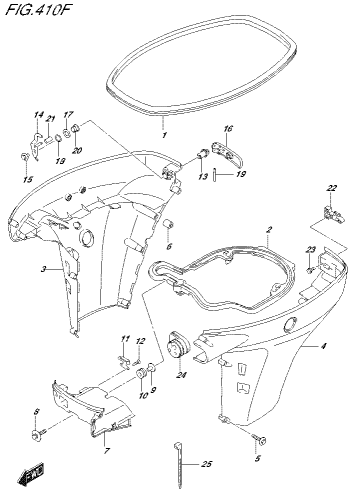

DF90A_E01_01B_410F
SIDE COVER

FIG.410G

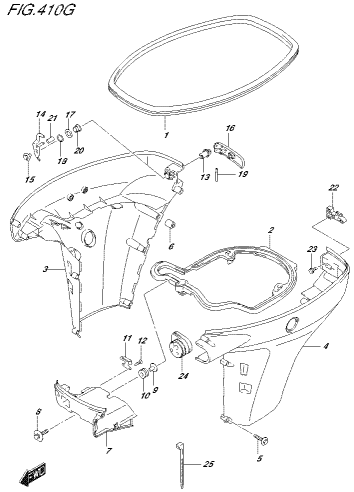

DF90A_E01_01B_410G
SIDE COVER

FIG.410H

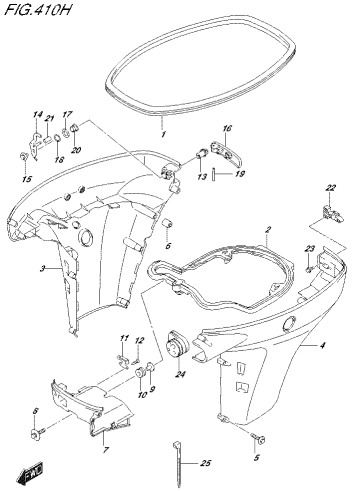

DF80A_E01_01B_410H
SIDE COVER

FIG.410J

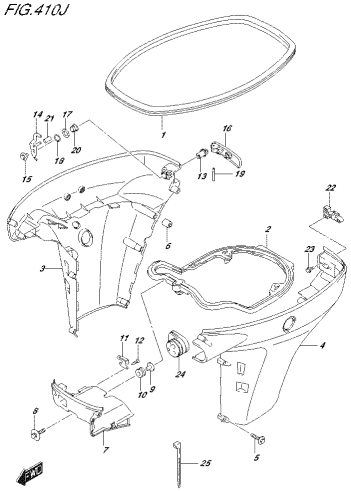

DF80A_E01_01B_410J
SIDE COVER

FIG.410K

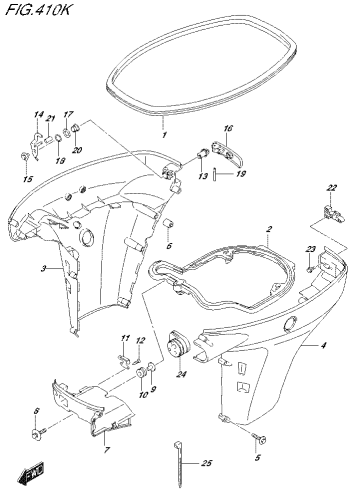

DF80A_E01_01B_410K
SIDE COVER

FIG.410L

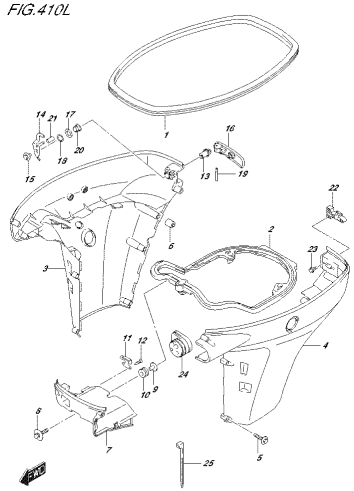

DF80A_E01_01B_410L
SIDE COVER

FIG.410M

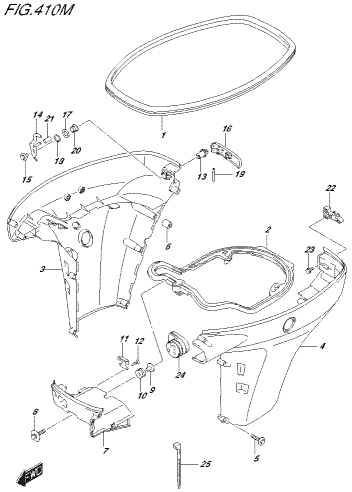

DF80A_E01_01B_410M
SIDE COVER

FIG.410N

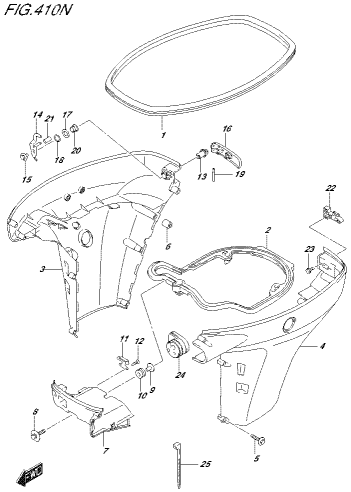

DF80A_E01_01B_410N
SIDE COVER

FIG.410P

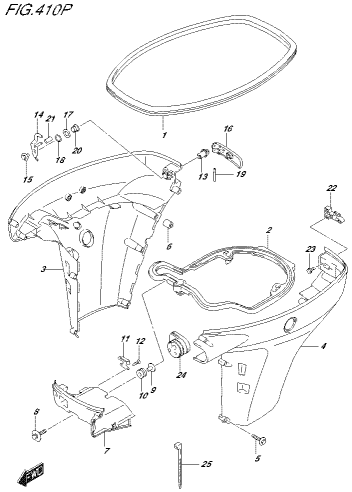

DF80A_E01_01B_410P
SIDE COVER

FIG.410R

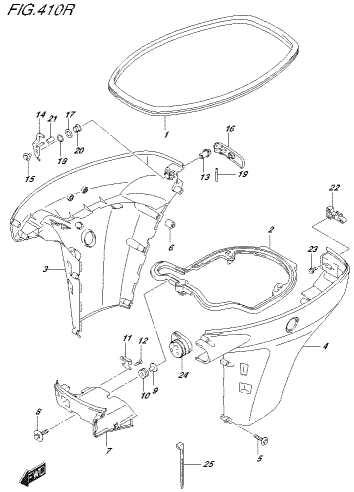

DF80A_E01_01B_410R
SIDE COVER

FIG.410S

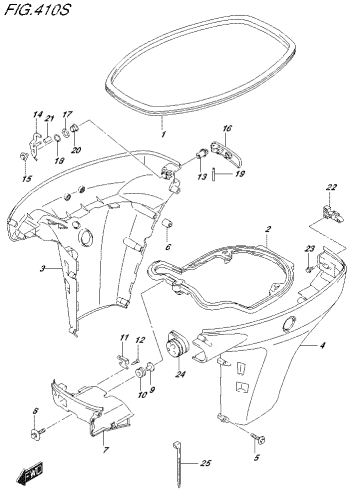

DF90A_E01_01R_410S
SIDE COVER

FIG.410T

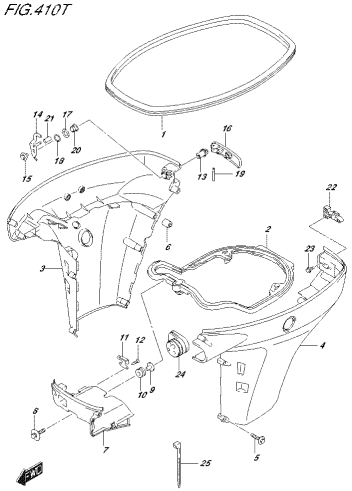

DF90A_E01_01R_410T
SIDE COVER

FIG.410U

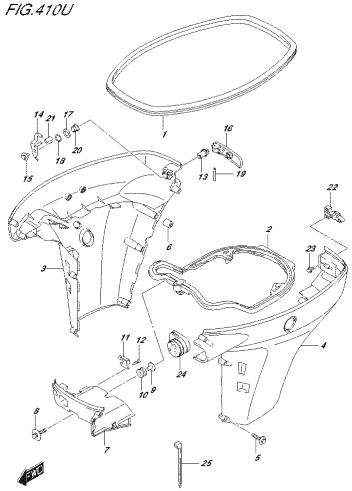

DF90A_E01_01R_410U
SIDE COVER

FIG.420A

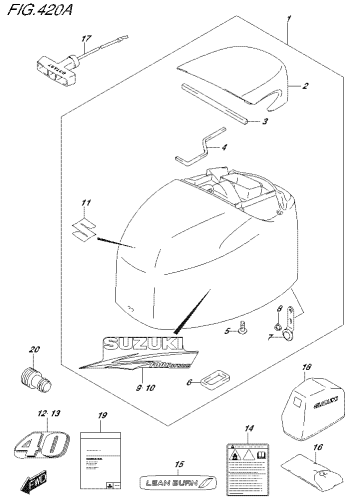

DF90A_E01_01R_420A
ENGINE COVER

FIG.420B

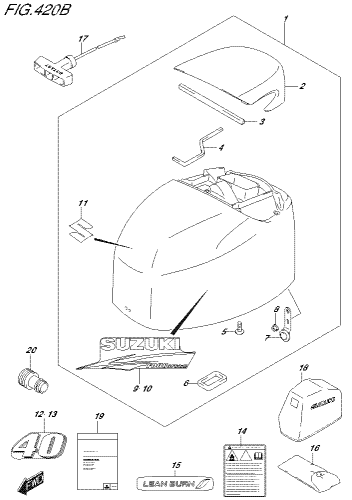

DF90A_E01_01R_420B
ENGINE COVER

FIG.420C

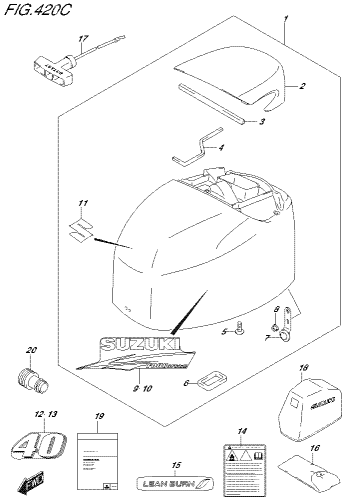

DF90A_E01_01R_420C
ENGINE COVER

FIG.420D

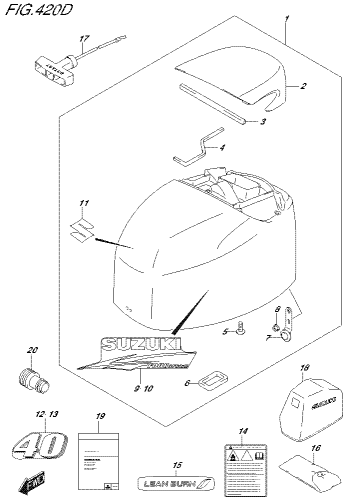

DF90A_E01_01R_420D
ENGINE COVER

FIG.420E

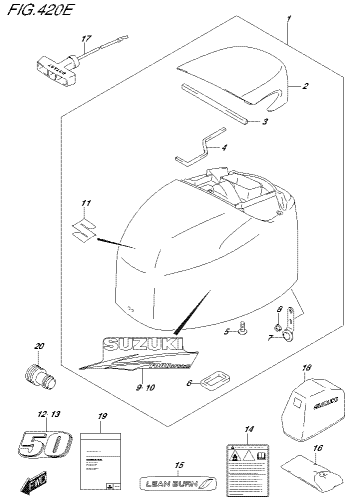

DF90A_E01_01R_420E
ENGINE COVER

FIG.420F

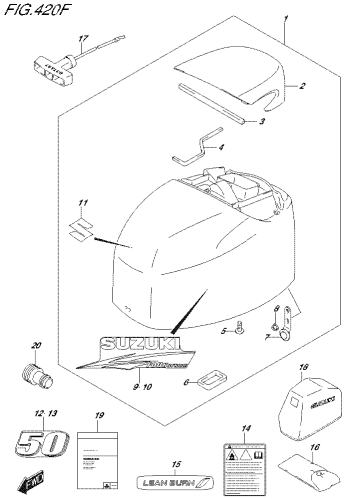

DF40A_E01_01R_420F
ENGINE COVER

FIG.420G

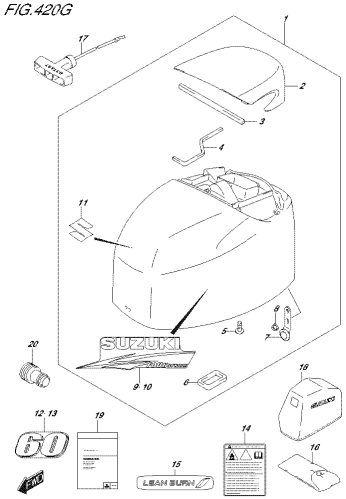

DF40A_E01_01R_420G
ENGINE COVER

FIG.420H

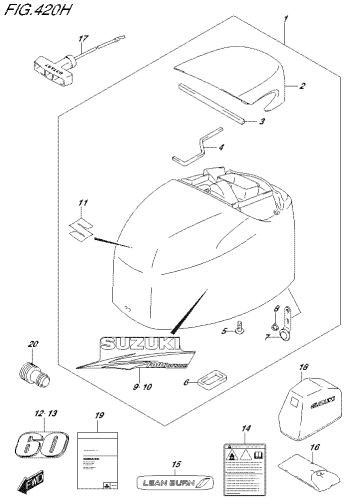

DF40A_E01_01R_420H
ENGINE COVER

FIG.420J

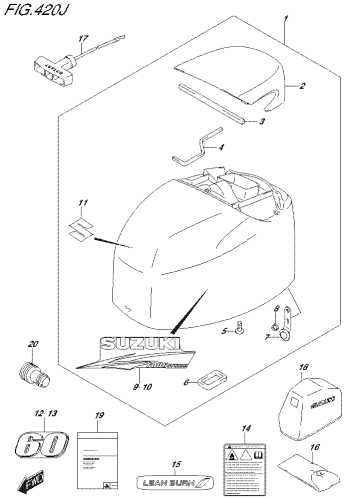

DF40A_E01_01R_420J
ENGINE COVER

FIG.420K

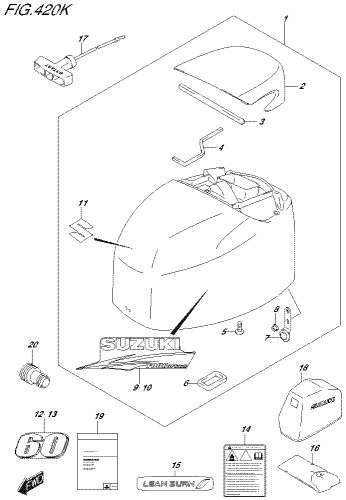

DF40A_E01_01R_420K
ENGINE COVER

FIG.420L

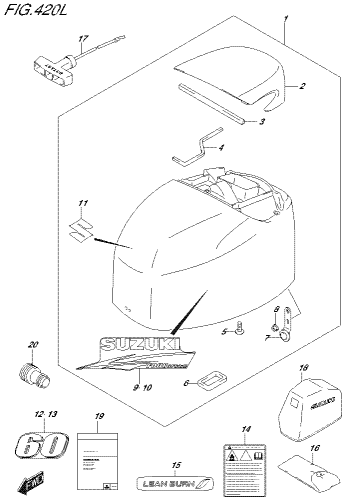

DF40A_E01_01R_420L
ENGINE COVER

FIG.420M

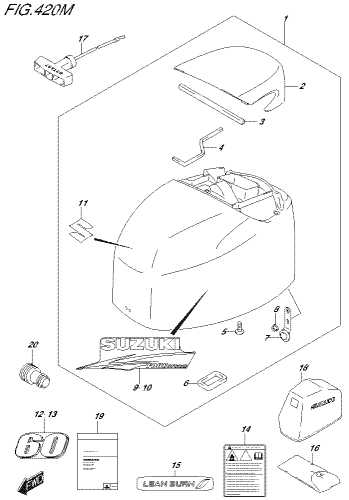

DF40A_E01_01R_420M
ENGINE COVER

FIG.420N

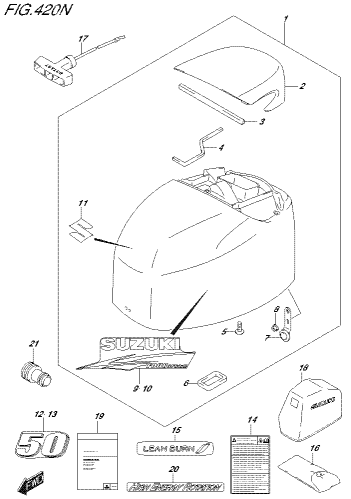

DF40A_E01_01R_420N
ENGINE COVER

FIG.420P

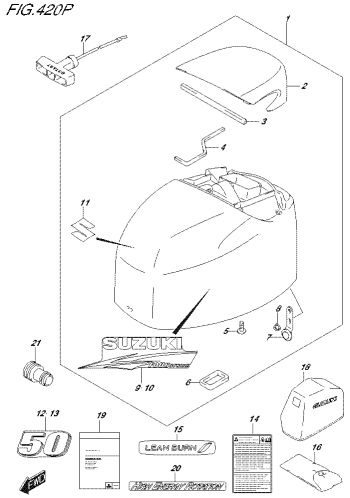

DF60A_E01_01R_420P
ENGINE COVER

FIG.420R

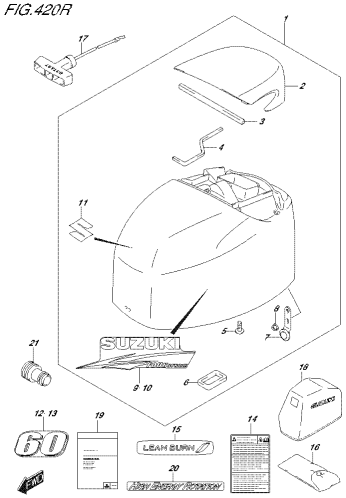

DF60A_E01_01R_420R
ENGINE COVER

FIG.420S

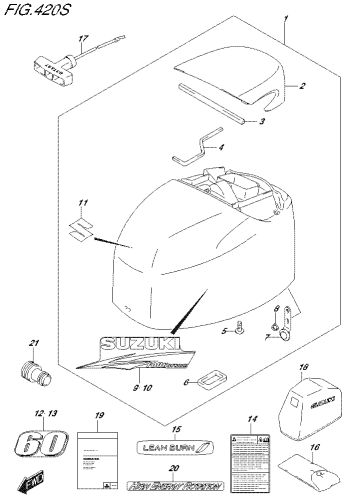

DF60A_E01_01R_420S
ENGINE COVER

FIG.420T

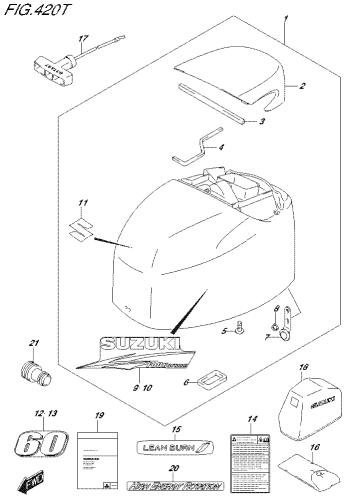

DF60A_E01_01R_420T
ENGINE COVER

FIG.420U

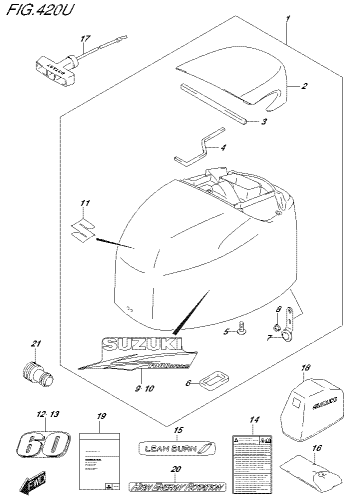

DF60A_E01_01R_420U
ENGINE COVER

FIG.432A

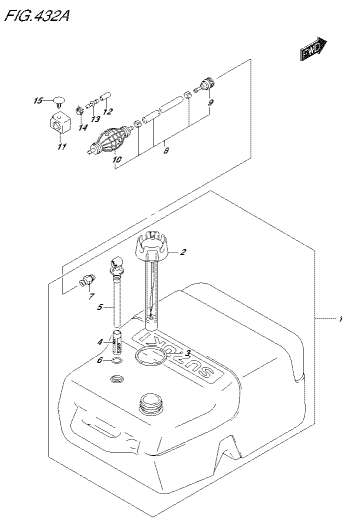

DF60A_E01_01R_432A
FUEL TANK

FIG.442A

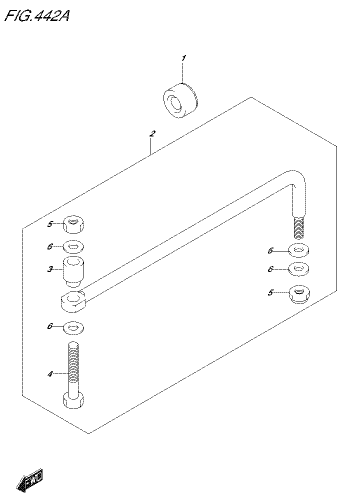

DF60A_E01_01R_442A
DRAG LIVK

FIG.442B

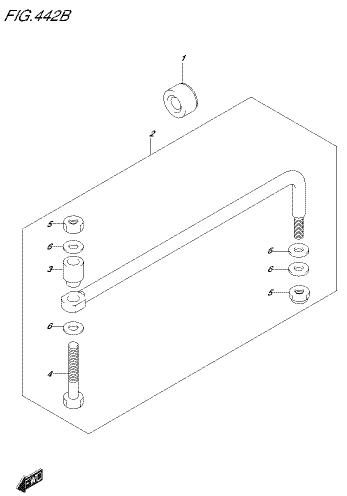

DF60A_E01_01R_442B
DRAG LIVK

FIG.442C

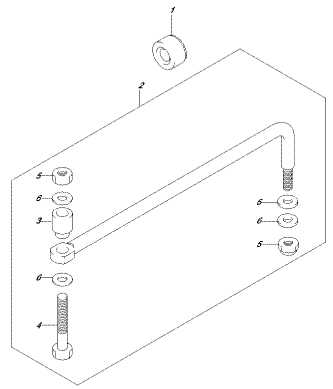

DF90A_E01_01K_442C
DRAG LINK

FIG.442D

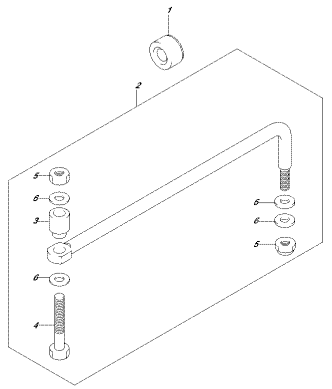

DF90A_E01_01K_442D
DRAG LINK

FIG.442E

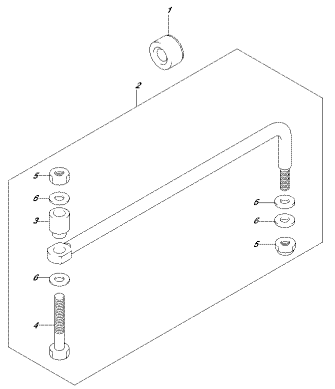

DF90A_E01_01K_442E
DRAG LINK

FIG.442F

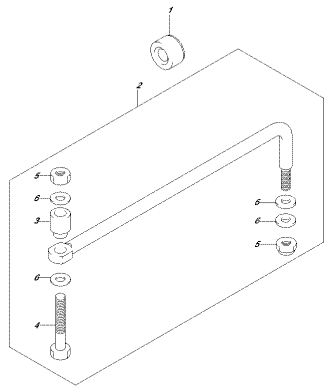

DF90A_E01_01K_442F
DRAG LINK

FIG.442G

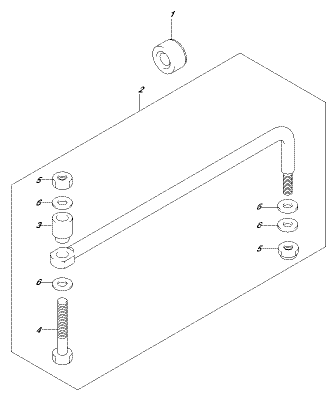

DF90A_E01_01K_442G
DRAG LINK

FIG.442H

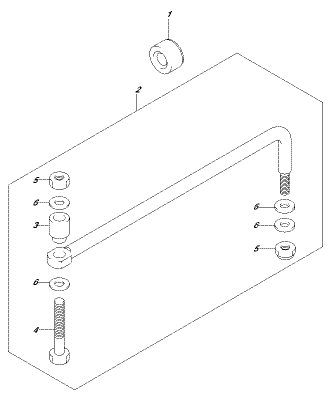

DF90A_E01_01K_442H
DRAG LINK

FIG.444A

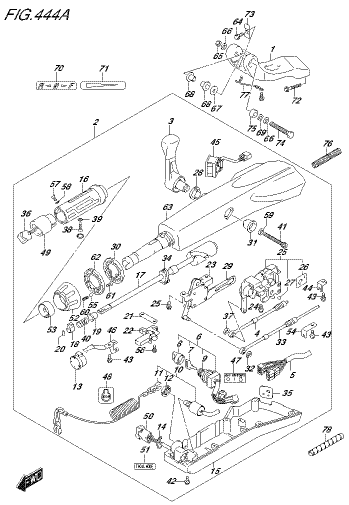

DF90A_E01_01K_444A
TILLER HANDLE

FIG.444B

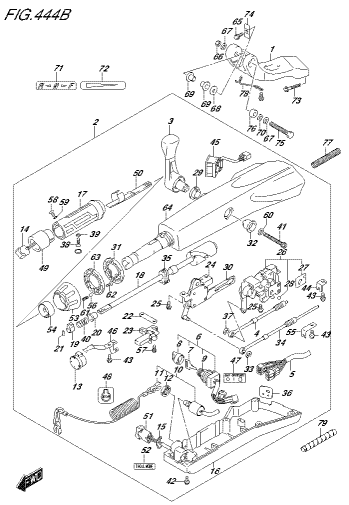

DF90A_E01_01K_444B
TILLER HANDLE

FIG.444C

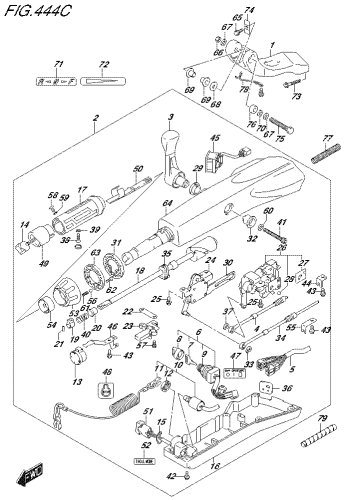

DF8RA_E01_018_444C
TILLER HANDLE

FIG.444D

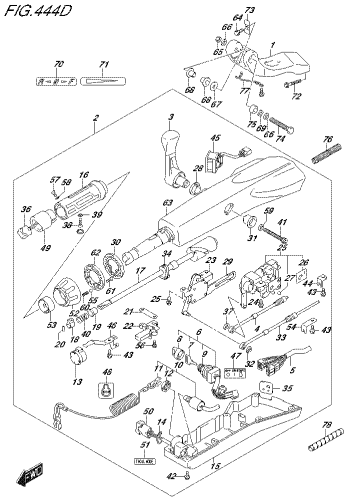

DF8RA_E01_018_444D
TILLER HANDLE

FIG.444E

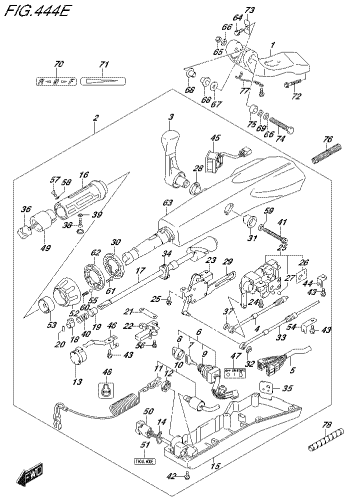

DF8RA_E01_018_444E
TILLER HANDLE

FIG.444F

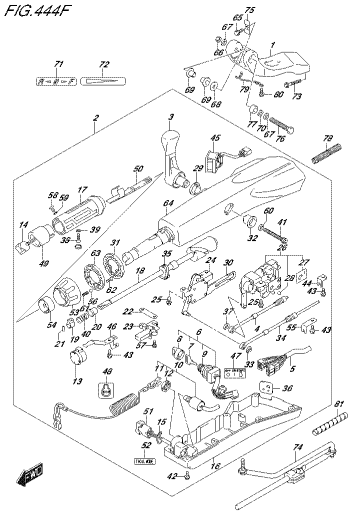

DF8RA_E01_018_444F
TILLER HANDLE

FIG.444G

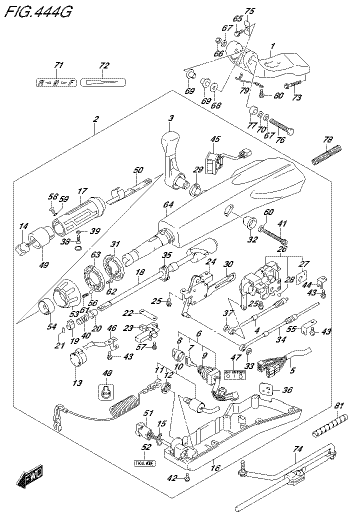

DF8RA_E01_018_444G
TILLER HANDLE

FIG.444H

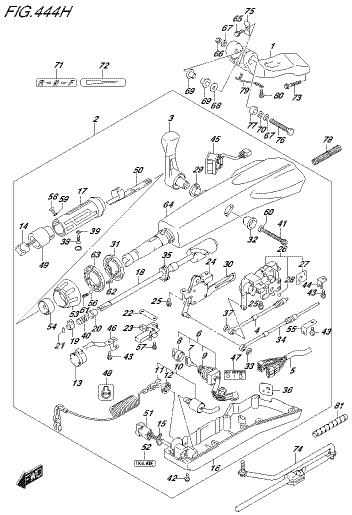

DF8RA_E01_018_444H
TILLER HANDLE

FIG.444J

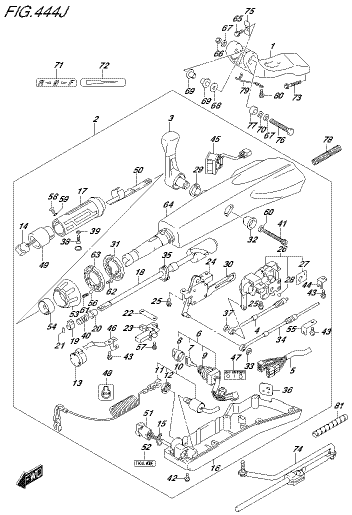

DF8RA_E01_018_444J
TILLER HANDLE

FIG.444K

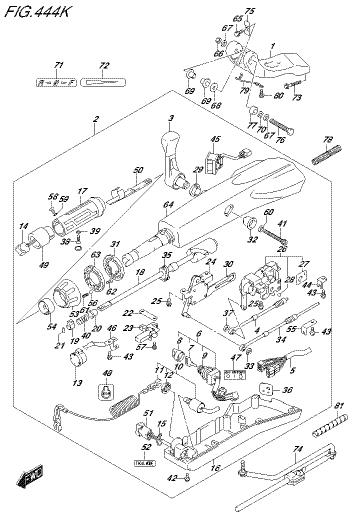

DF8RA_E01_018_444K
TILLER HANDLE

FIG.460A

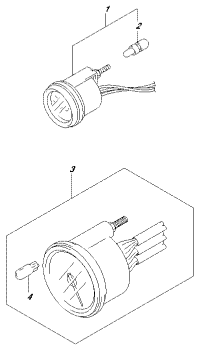

DF80A_E01_01K_460A
METER

FIG.460B

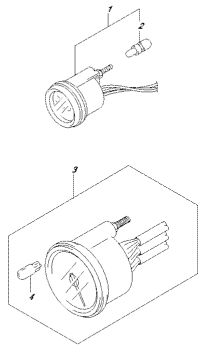

DF80A_E01_01K_460B
METER

FIG.460C

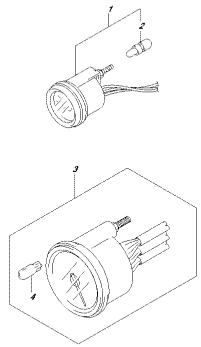

DF80A_E01_01K_460C
METER

FIG.460D

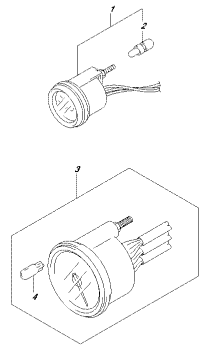

DF80A_E01_01K_460D
METER

FIG.460E

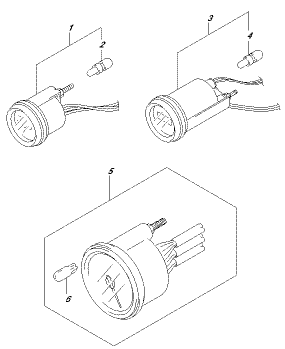

DF80A_E01_01K_460E
METER

FIG.460F

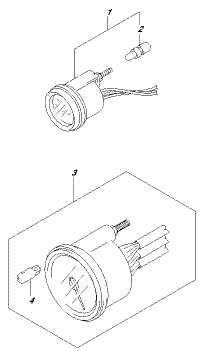

DF80A_E01_01K_460F
METER

FIG.460G

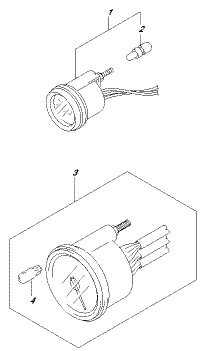

DF80A_E01_01K_460G
METER

FIG.460H

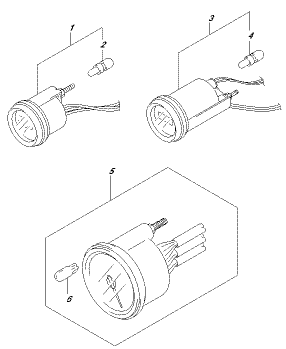

DF80A_E01_01K_460H
METER

FIG.502A

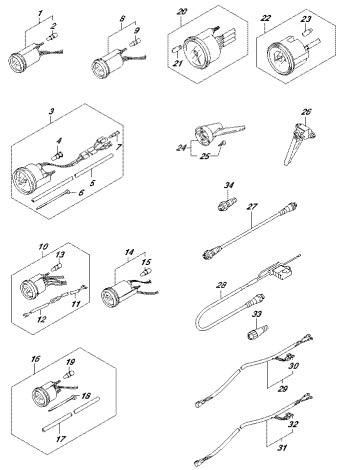

DFR9A_E01_016_503A
OPT:METER (1)

FIG.502B

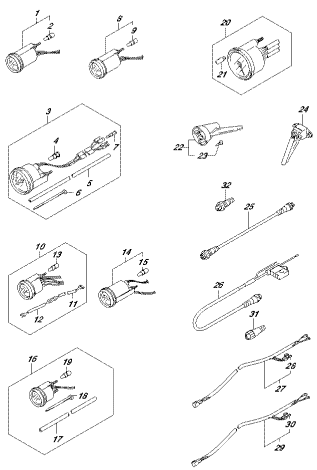

DFR9A_E01_016_503B
OPT:METER (1)

FIG.502C

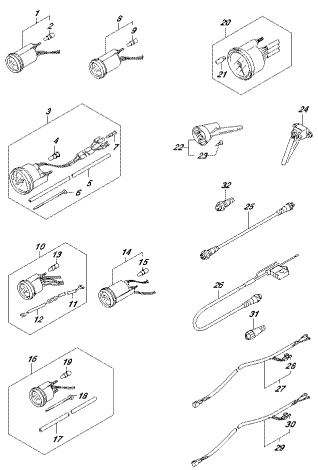

DFR9A_E01_016_503C
OPT:METER (1)

FIG.502D

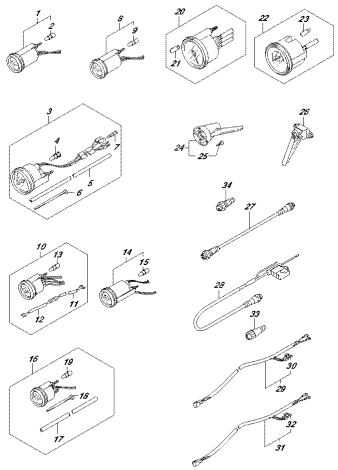

DFR9A_E01_016_503D
OPT:METER (1)

FIG.502E

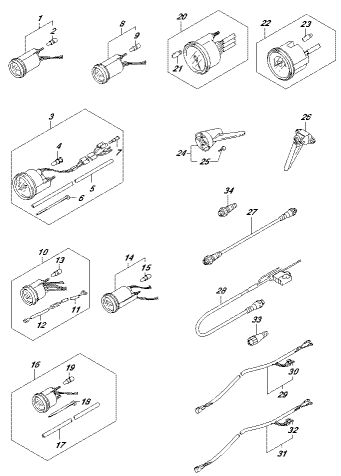

DFR9A_E01_016_503E
OPT:METER (1)

FIG.502F

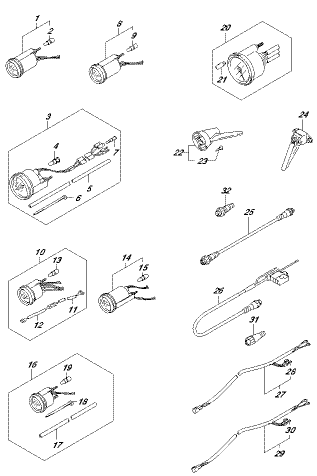

DFR9A_E01_016_503F
OPT:METER (1)

FIG.502G

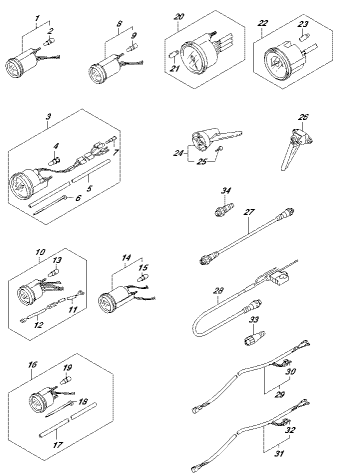

DFR9A_E01_016_503G
OPT:METER (1)

FIG.502H

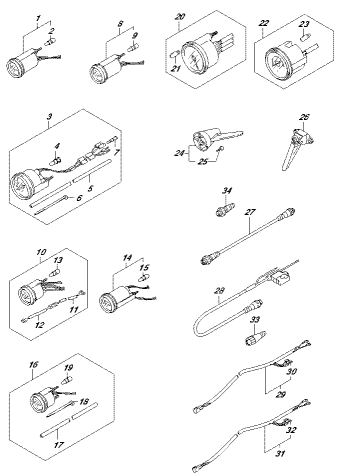

DFR9A_E01_016_503H
OPT:METER (1)

FIG.502J

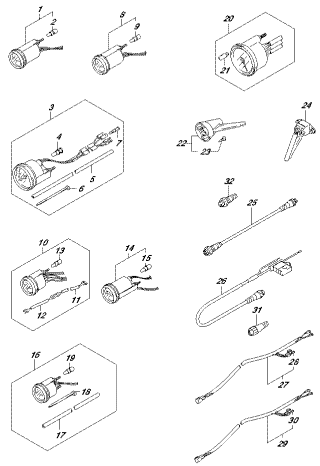

DFR9A_E01_016_502J
OPT:METER (1)

FIG.502K

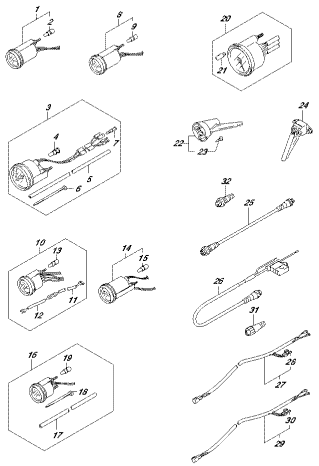

DFR9A_E01_016_502K
OPT:METER (1)

FIG.502L

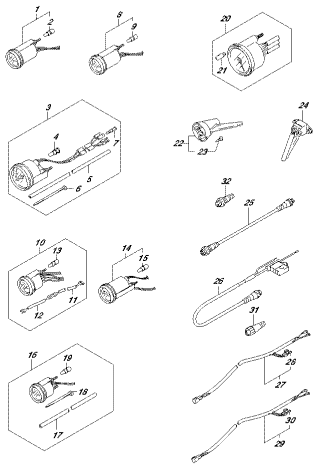

DFR9A_E01_016_502L
OPT:METER (1)

FIG.502M

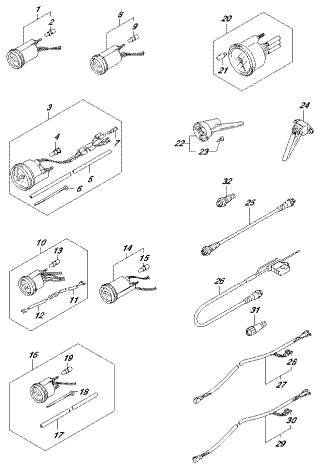

DFR9A_E01_016_502M
OPT:METER (1)

FIG.502N

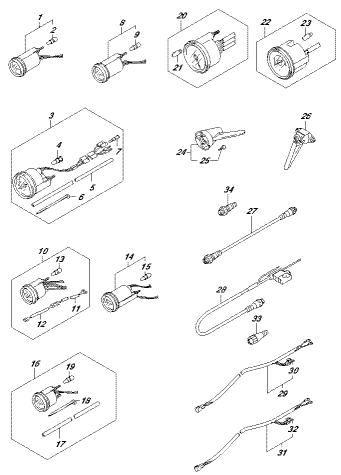

DFR9A_E01_016_502N
OPT:METER (1)

FIG.502P

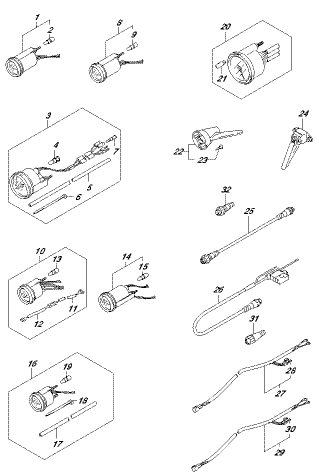

DFR9A_E01_016_502P
OPT:METER (1)

FIG.502R

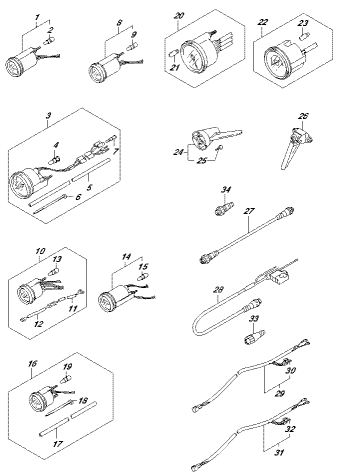

DFR9A_E01_016_502R
OPT:METER (1)

FIG.502S

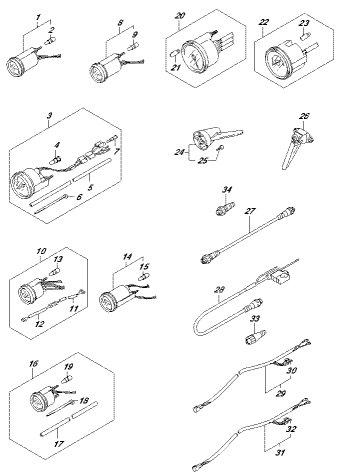

DFR9A_E01_016_502S
OPT:METER (1)

FIG.502T

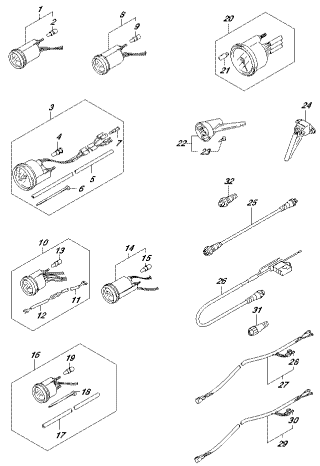

DF6RA_E01_016_502T
OPT:METER (1)

FIG.502U

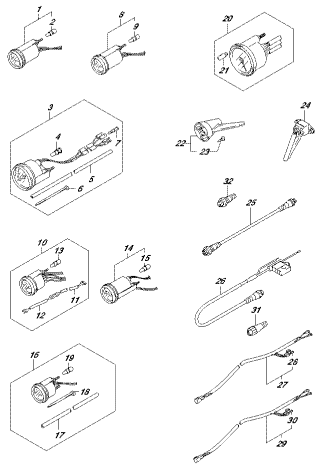

DF6RA_E01_016_502U
OPT:METER (1)

FIG.503A

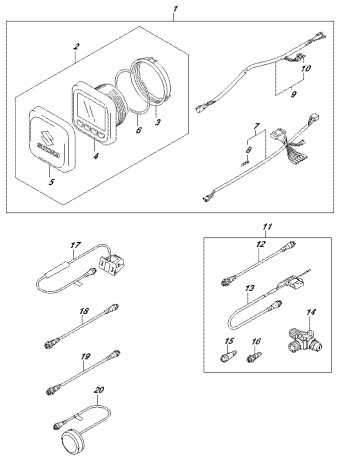

DF6RA_E01_016_503A
OPT:METER (2)

FIG.503B

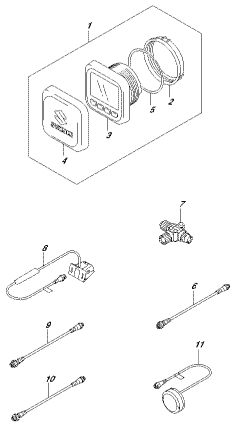

DF6RA_E01_016_503B
OPT:METER (2)

FIG.503C

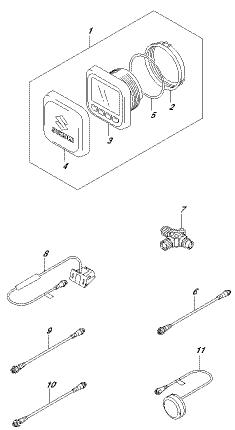

DF6RA_E01_016_503C
OPT:METER (2)

FIG.503D

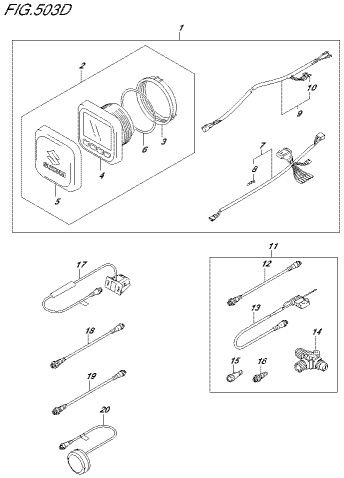

DF6RA_E01_016_503D
OPT:METER (2)

FIG.503E

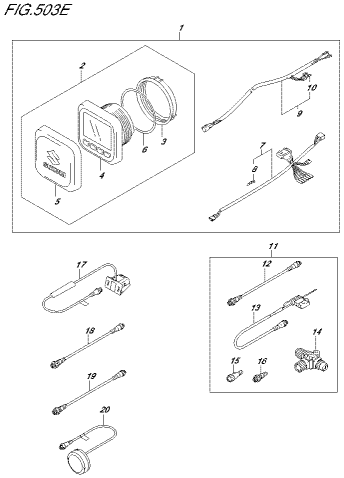

DF6RA_E01_016_503E
OPT:METER (2)

FIG.503F

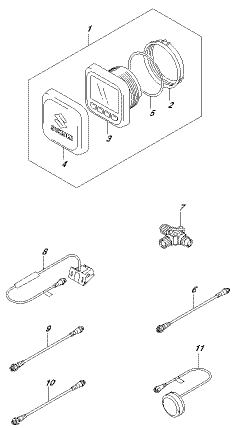

DF6RA_E01_016_503F
OPT:METER (2)

FIG.503G

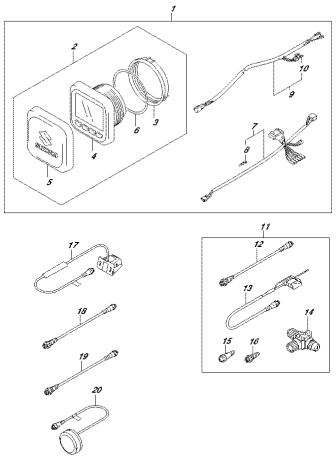

DF6RA_E01_016_503G
OPT:METER (2)

FIG.503H

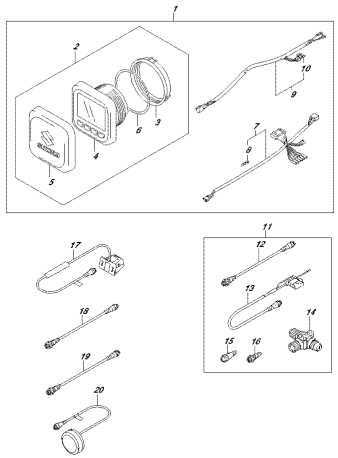

DF6RA_E01_016_503H
OPT:METER (2)

FIG.503J

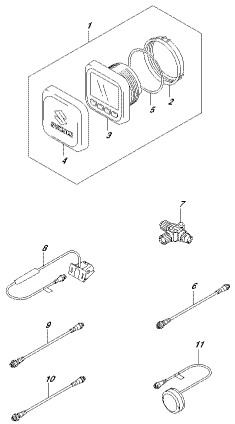

DF6RA_E01_016_503J
OPT:METER (2)

FIG.503K

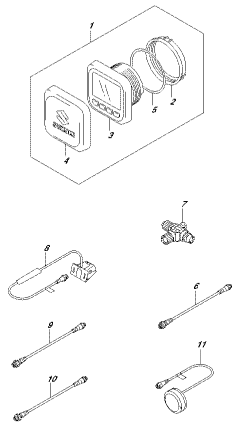

DF6RA_E01_016_503K
OPT:METER (2)

FIG.503L

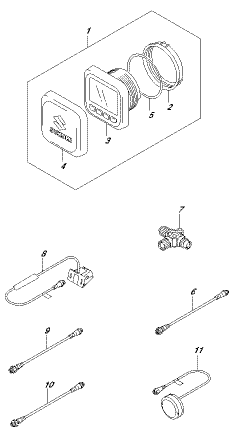

DF6RA_E01_016_503L
OPT:METER (2)

FIG.503M

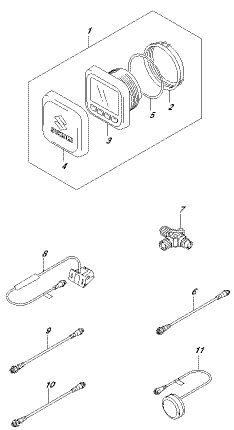

DF6RA_E01_016_503M
OPT:METER (2)

FIG.503N

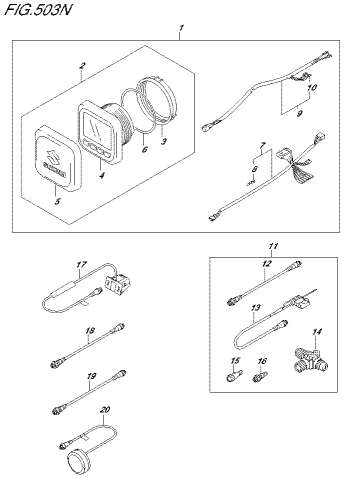

DF6RA_E01_016_503N
OPT:METER (2)

FIG.503P

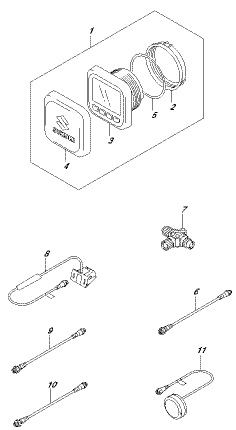

DF6RA_E01_016_503P
OPT:METER (2)

FIG.503R

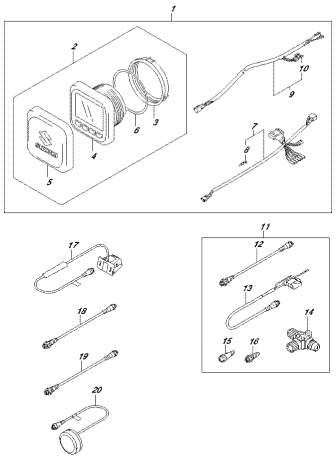

DF60A_E01_016_503R
OPT:METER (2)

FIG.503S

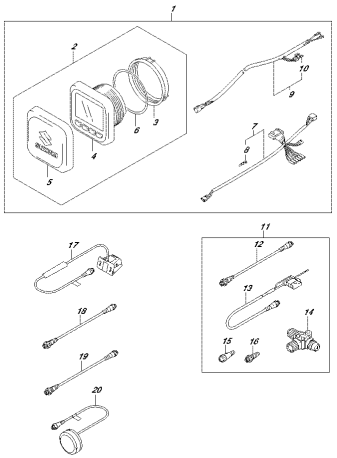

DF60A_E01_016_503S
OPT:METER (2)

FIG.503T

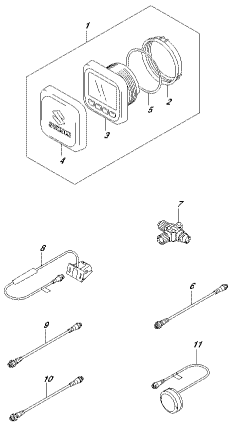

DF60A_E01_016_503T
OPT:METER (2)

FIG.503U

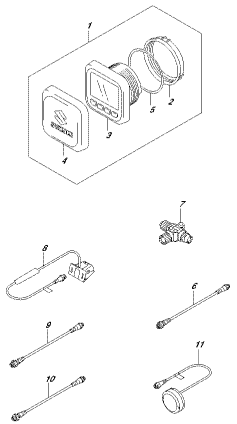

DF60A_E01_016_503U
OPT:METER (2)

FIG.507A

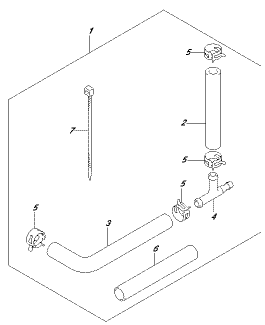

DF60A_E01_016_507A
OPT:WATER PRESSURE GAUGE SUB KIT

FIG.508A

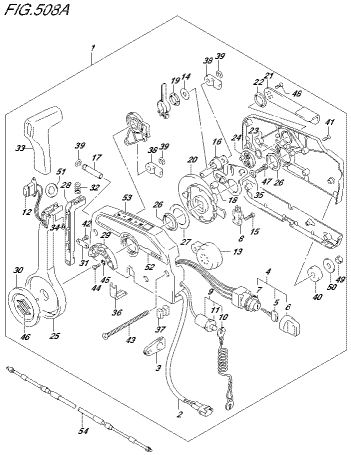

DF60A_E01_016_508A
OPT:REMOTE CONTROL

FIG.508B

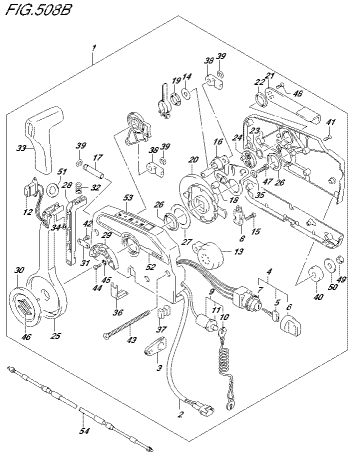

DF60A_E01_016_508B
OPT:REMOTE CONTROL

FIG.508C

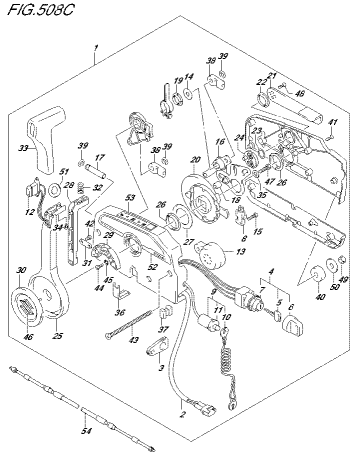

DF60A_E01_016_508C
OPT:REMOTE CONTROL

FIG.508D

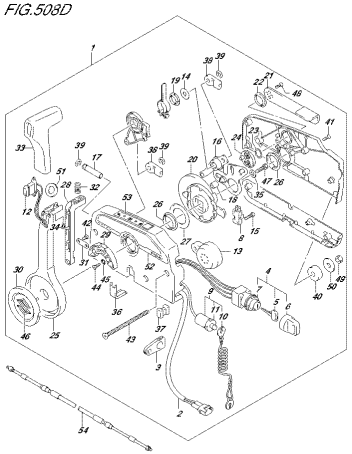

DF8RA_E01_016_508D
OPT:REMOTE CONTROL

FIG.508E

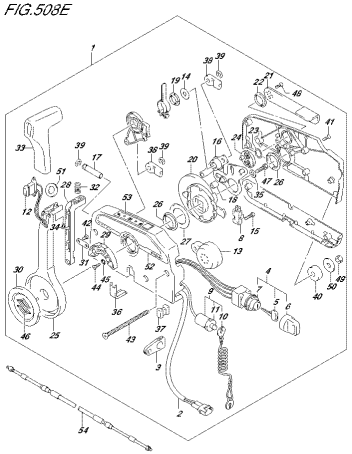

DF8RA_E01_016_508E
OPT:REMOTE CONTROL

FIG.508F

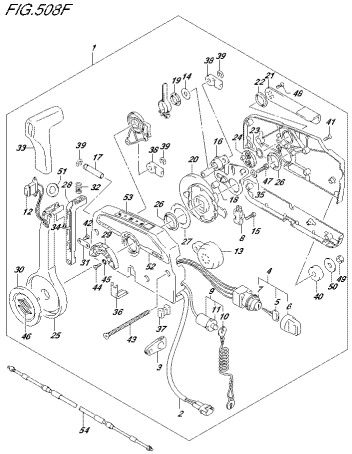

DF8RA_E01_016_508F
OPT:REMOTE CONTROL

FIG.508G

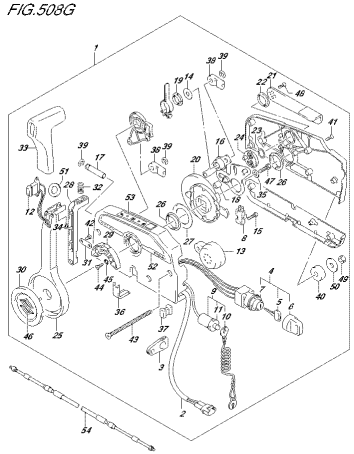

DF8RA_E01_016_508G
OPT:REMOTE CONTROL

FIG.508H

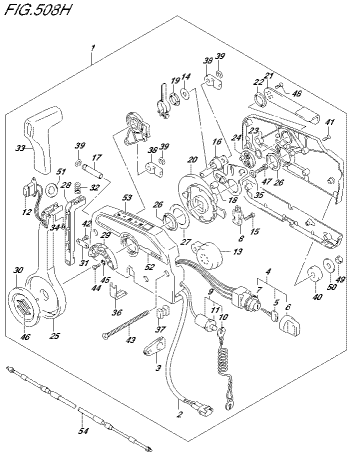

DF8RA_E01_016_508H
OPT:REMOTE CONTROL

FIG.515A

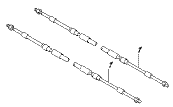

DF8RA_E01_016_515A
OPT:REMOCON CABLE

FIG.515B

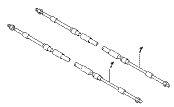

DF8RA_E01_016_515B
OPT:REMOCON CABLE

FIG.515C

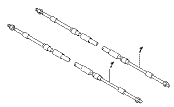

DF8RA_E01_016_515C
OPT:REMOCON CABLE

FIG.515D

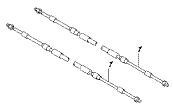

DF80A_E01_016_515D
OPT:REMOCON CABLE

FIG.515E

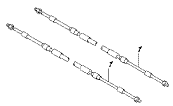

DF80A_E01_016_515E
OPT:REMOCON CABLE

FIG.515F

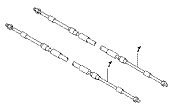

DF80A_E01_016_515F
OPT:REMOCON CABLE

FIG.515G

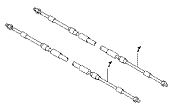

DF80A_E01_016_515G
OPT:REMOCON CABLE

FIG.515H

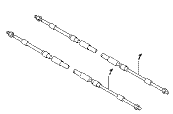

DF80A_E01_016_515H
OPT:REMOCON CABLE

FIG.515J

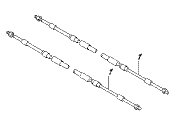

DF80A_E01_016_515J
OPT:REMOCON CABLE

FIG.515K

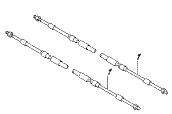

DF80A_E01_016_515K
OPT:REMOCON CABLE

FIG.521A

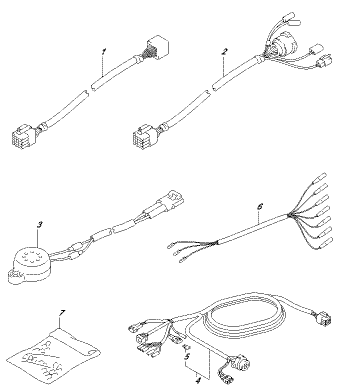

DF80A_E01_016_521A
OPT:HARNESS

FIG.521B

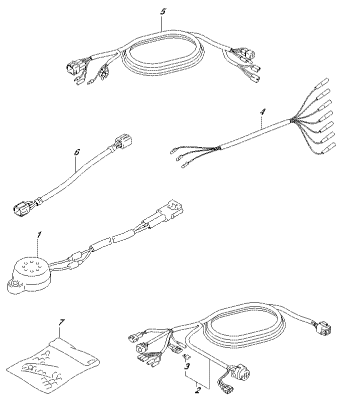

DF90A_E01_016_521B
OPT:HARNESS

FIG.521C

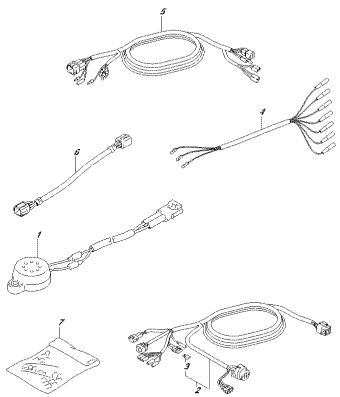

DF90A_E01_016_521C
OPT:HARNESS

FIG.521D

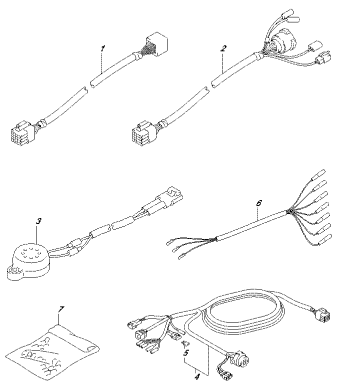

DF90A_E01_016_521D
OPT:HARNESS

FIG.521E

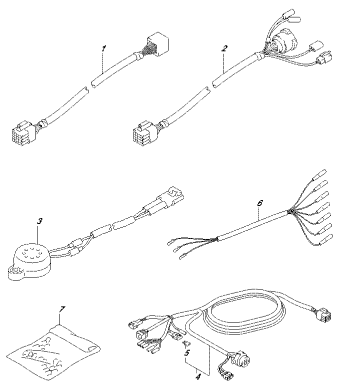

DF90A_E01_016_521E
OPT:HARNESS

FIG.521F

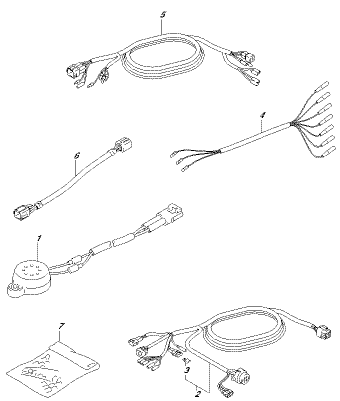

DF90A_E01_016_521F
OPT:HARNESS

FIG.521G

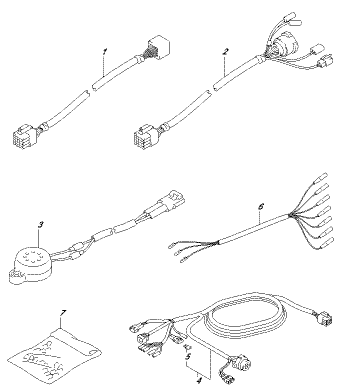

DF90A_E01_016_521G
OPT:HARNESS

FIG.521H

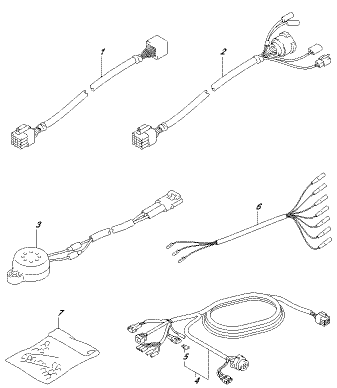

DF90A_E01_016_521H
OPT:HARNESS

FIG.521J

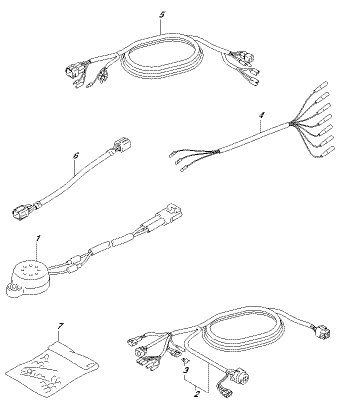

DF90A_E01_016_521J
OPT:HARNESS

FIG.521K

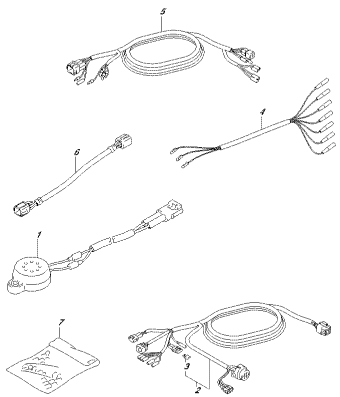

DF90A_E01_016_521K
OPT:HARNESS

FIG.521L

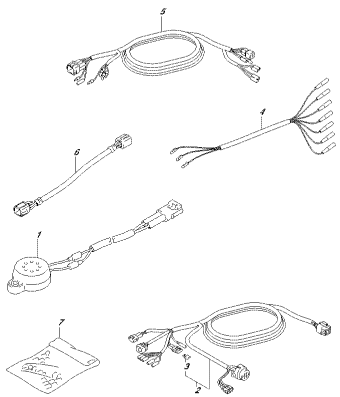

DF90A_E01_016_521L
OPT:HARNESS

FIG.521M

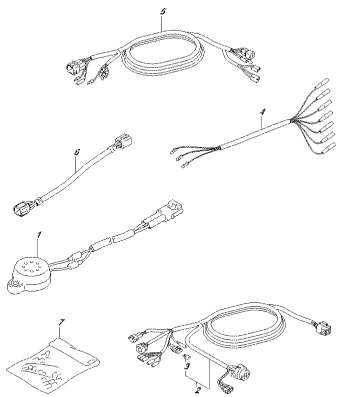

DF90A_E01_016_521M
OPT:HARNESS

FIG.521N

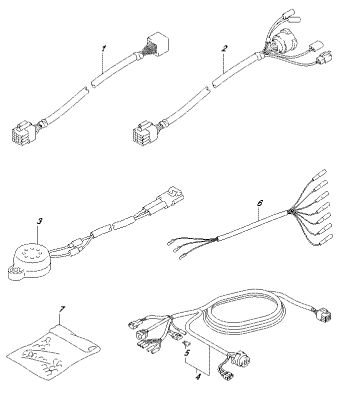

DF90A_E01_016_521N
OPT:HARNESS

FIG.521P

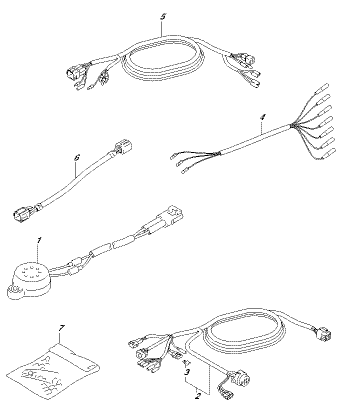

DF90A_E01_016_521P
OPT:HARNESS

FIG.521R

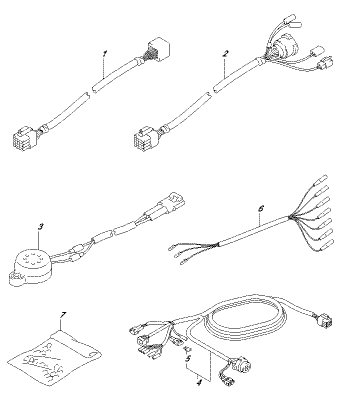

DF90A_E01_016_521R
OPT:HARNESS

FIG.521S

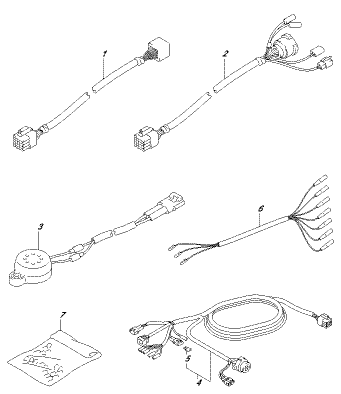

DF90A_E01_016_521S
OPT:HARNESS

FIG.521T

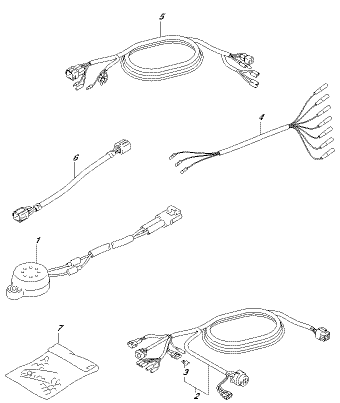

DF90A_E01_016_521T
OPT:HARNESS

FIG.521U

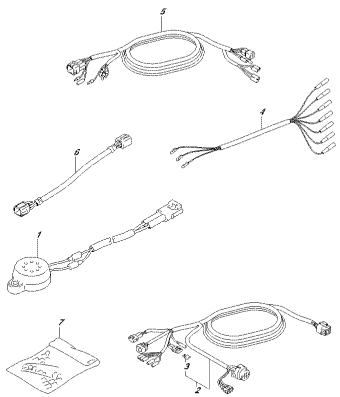

DFR9A_E01_016_521U
OPT:HARNESS

FIG.530A

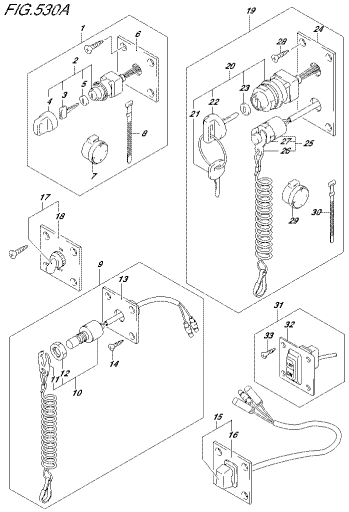

DFR9A_E01_016_530A
OPT:SWITCH

FIG.530B

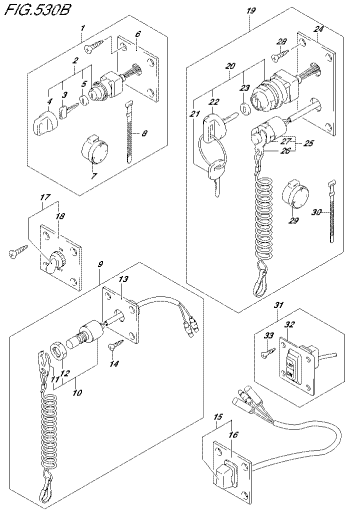

DFR9A_E01_016_530B
OPT:SWITCH

FIG.530C

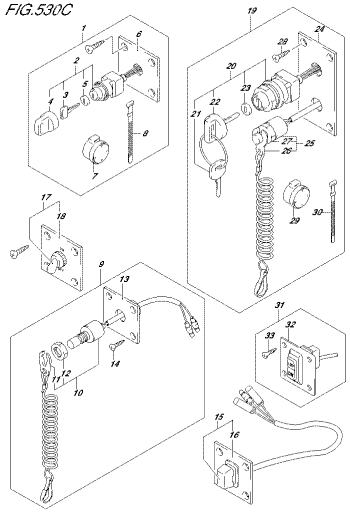

DFR9A_E01_016_530C
OPT:SWITCH

FIG.530D

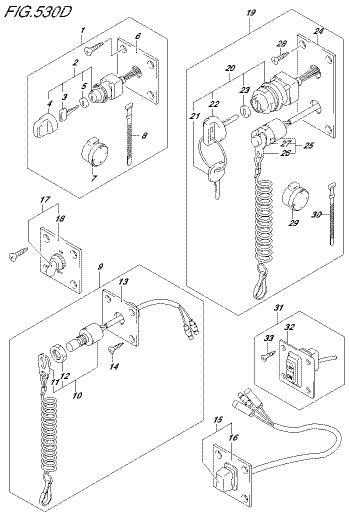

DFR9A_E01_016_530D
OPT:SWITCH

FIG.530E

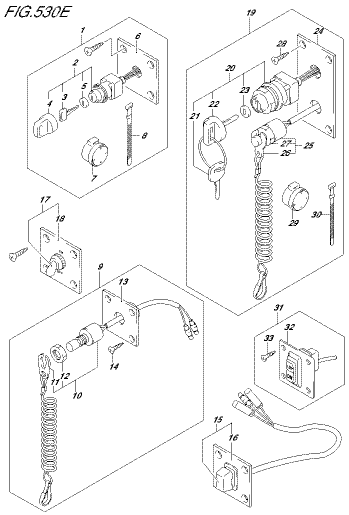

DFR9A_E01_016_530E
OPT:SWITCH

FIG.530F

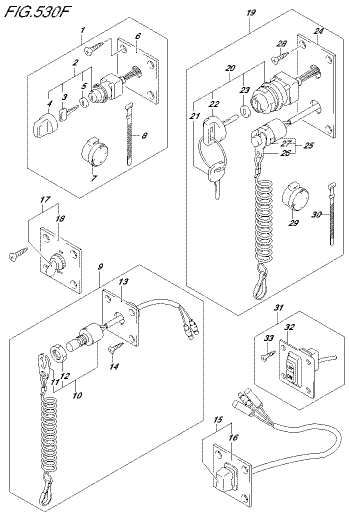

DFR9A_E01_016_530F
OPT:SWITCH

FIG.530G

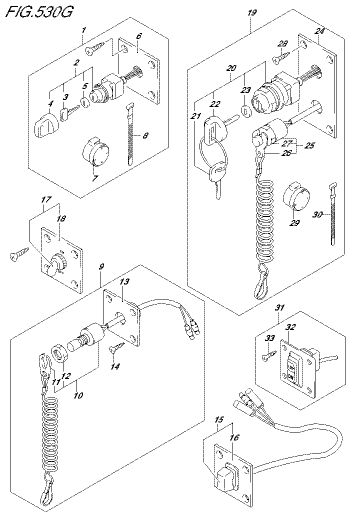

DFR9A_E01_016_530G
OPT:SWITCH

FIG.530H

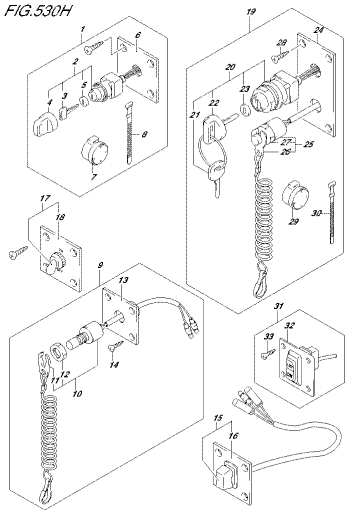

DF8RA_E01_016_530H
OPT:SWITCH

FIG.544A

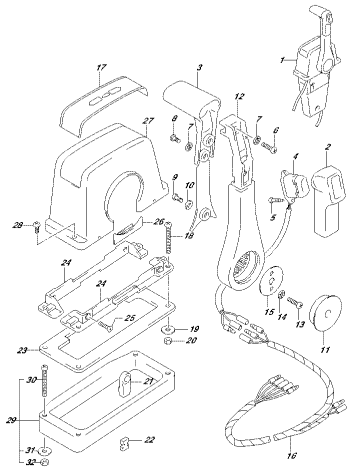

DF8RA_E01_016_544A
OPT:REMOTE CONTROL ASSY SINGLE (1)

FIG.545A

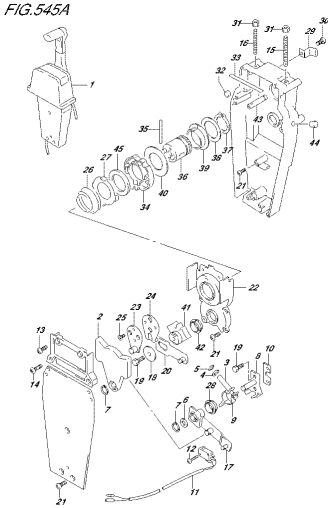

DF8RA_E01_016_545A
OPT:REMOTE CONTROL ASSY SINGLE (2)

FIG.570A

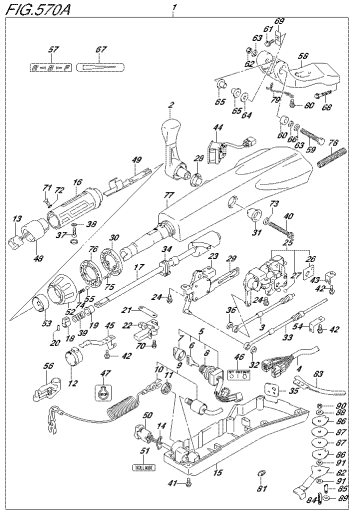

DF8RA_E01_016_570A
OPT:TILLER HANDLE

FIG.570B

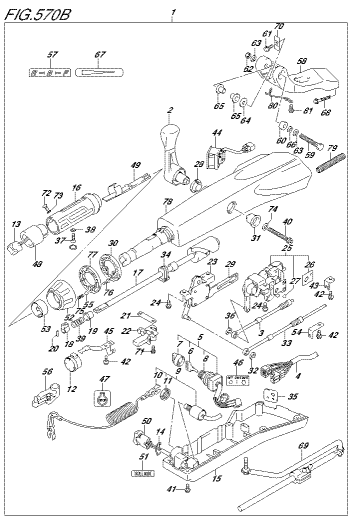

DF8RA_E01_016_570B
OPT:TILLER HANDLE

FIG.570C

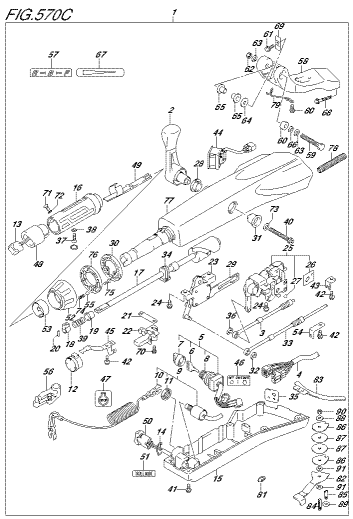

DF8RA_E01_016_570C
OPT:TILLER HANDLE

FIG.570D

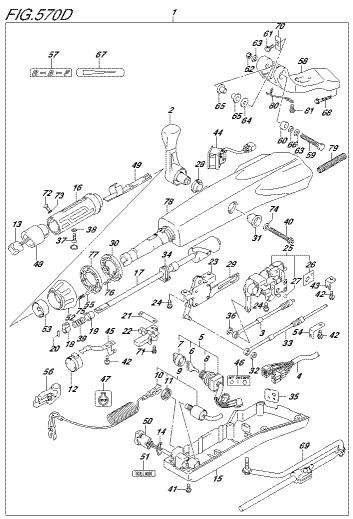

DF8RA_E01_016_570D
OPT:TILLER HANDLE

FIG.570E

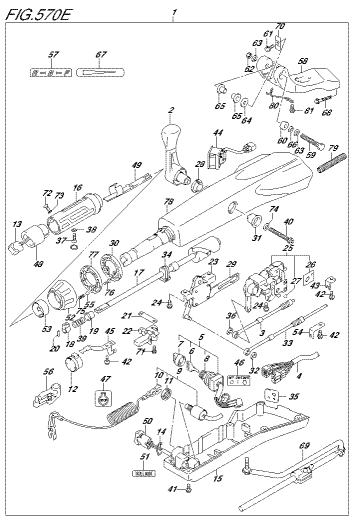

DF8RA_E01_016_570E
OPT:TILLER HANDLE

FIG.570F

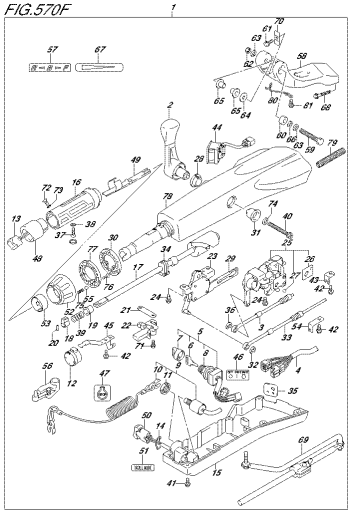

DF90A_E01_016_570F
OPT:TILLER HANDLE

FIG.570G

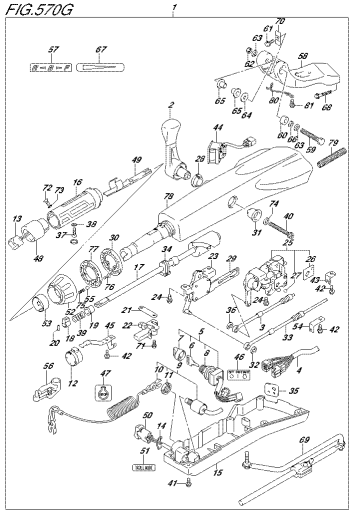

DF90A_E01_016_570G
OPT:TILLER HANDLE

FIG.570H

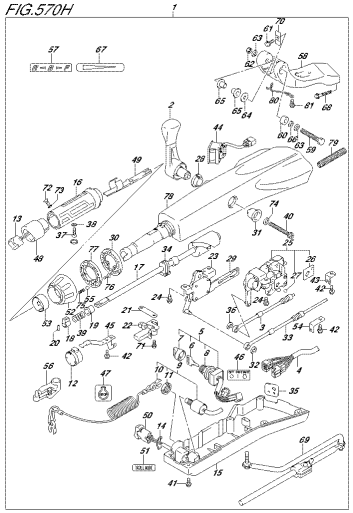

DF90A_E01_016_570H
OPT:TILLER HANDLE

FIG.575A

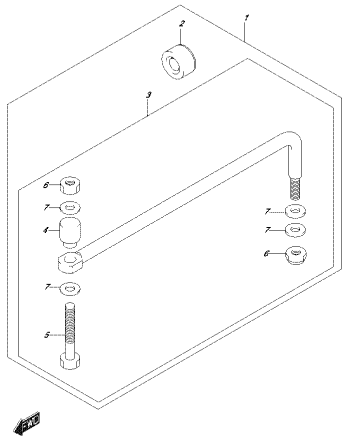

DF90A_E01_016_575A
OPT:DRAG LINK

FIG.575B

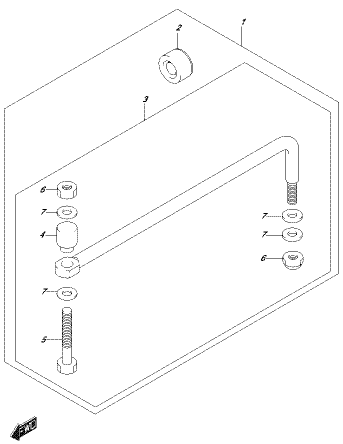

DF90A_E01_016_575B
OPT:DRAG LINK

FIG.575C

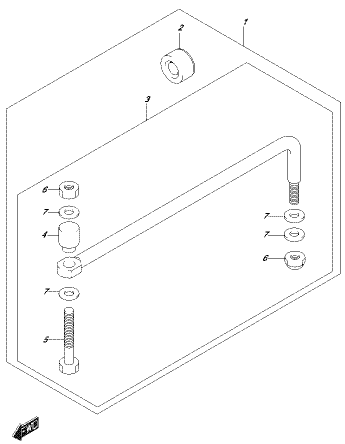

DF90A_E01_016_575C
OPT:DRAG LINK

FIG.575D

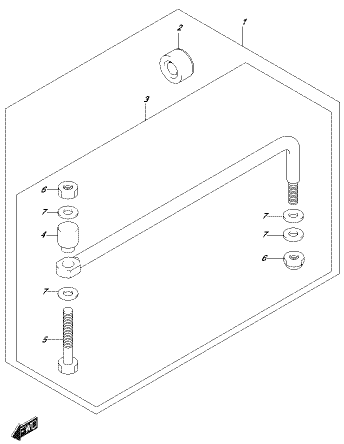

DF90A_E01_016_575D
OPT:DRAG LINK

FIG.575E

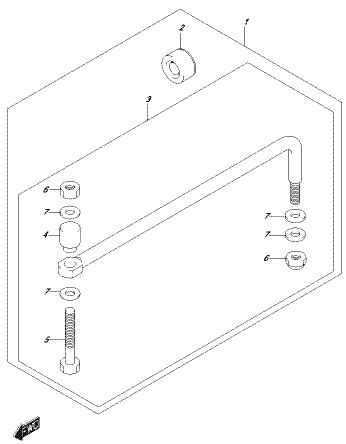

DF90A_E01_016_575E
OPT:DRAG LINK

FIG.575F

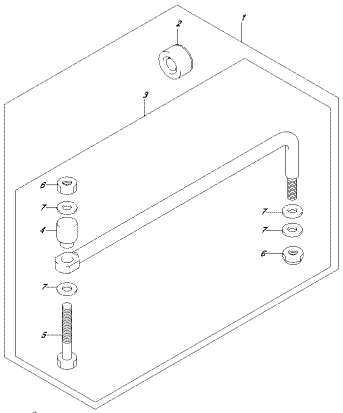

DF8RA_E01_016_575F
OPT:DRAG LINK

FIG.575G

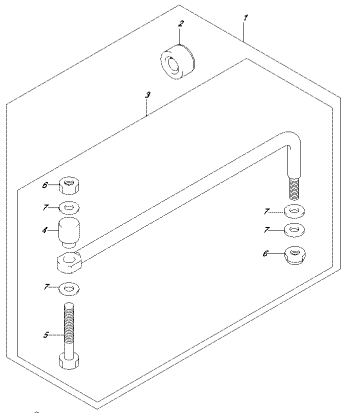

DF8RA_E01_016_575G
OPT:DRAG LINK

FIG.575H

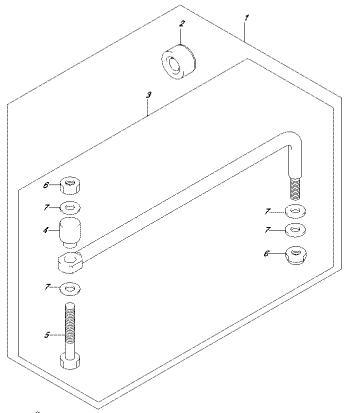

DF8RA_E01_016_575H
OPT:DRAG LINK

FIG.575J

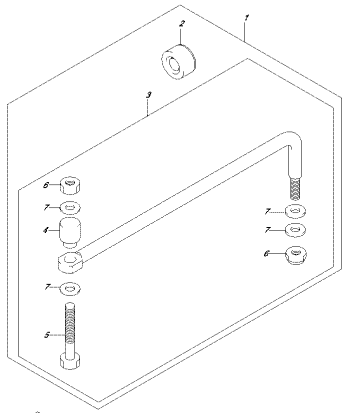

DF8RA_E01_016_575J
OPT:DRAG LINK

FIG.575K

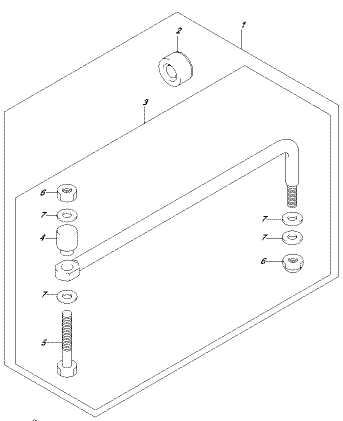

DF8RA_E01_016_575K
OPT:DRAG LINK

FIG.585A

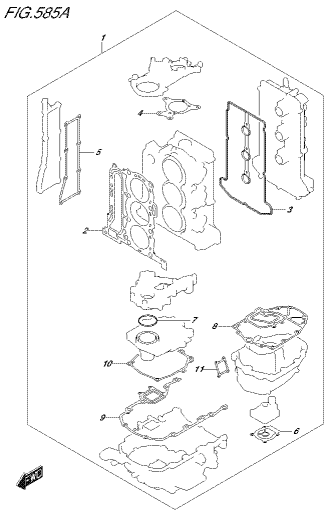

DF8RA_E01_016_585A
OPT:GASKET SET

FIG.111A

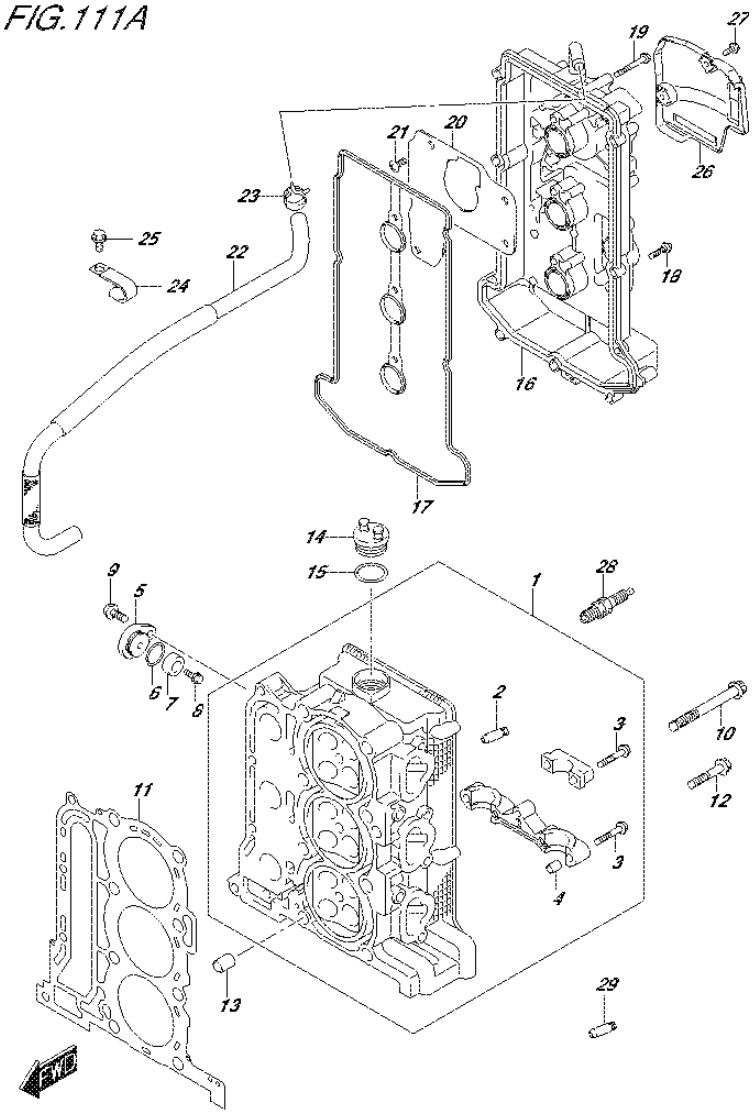

FIG.111A (1-B-2) CYLINDER HEAD (DF40A E01)

REF NO.	PART NO.	DESCRIPTION	Q'TY	REMARKS
1	11100-88L00	HEAD ASSY, CYLINDER	1	
2	11115-73G01-001	.GUIDE, VALVE	12	
3	09103-06266	.BOLT (6X40)	17	
4	09206-08001	.PIN (8X11)	14	
5	11261-93J00	COVER, PROTECTION ANODE	2	
6	09280-22019	O RING (D:1.9,ID:21.8)	2	
7-1	55321-87J00	ANODE, PROTECTION	2	
7-2	55321-87J10	ANODE (MAGNESIUM)	1	OPT
8	09103-06281	BOLT (6X14)	2	
9	01550-08207	BOLT	2	
10	11119-87J00	BOLT, CYLINDER HEAD (10X95)	8	
11	11141-88L00	GASKET, CYLINDER HEAD	1	
12	01550-08457	BOLT	4	
13	04211-13189	PIN	2	
14	11382-99E00	CAP, OIL FILLER	1	
15	09280-26006	O RING (D:3.1,ID:26.4)	1	
16	11170-88L10	COVER, CYLINDER HEAD	1	
17	11189-88L00	GASKET, CYLINDER HEAD COVER	1	
18	01547-06257	BOLT	9	
19	01547-06457	BOLT	3	
20	11173-88L00	PLATE, BREATHER	1	
21	02142-0612A	SCREW	4	
22	11174-88L00	HOSE, BREATHER	1	
23	09401-15414	CLIP	2	
24	09403-17303	CLAMP	2	
25	01550-06127	BOLT	2	
26	11194-88L10	GUARD, FUEL HOSE	1	
27	01550-06167	BOLT	2	
28	09482-00446	SPARK PLUG (DCPR6E)	3	NGK
29	11115-73G01-001	GUIDE, VALVE (OS)	4	OPT

FIG.111B

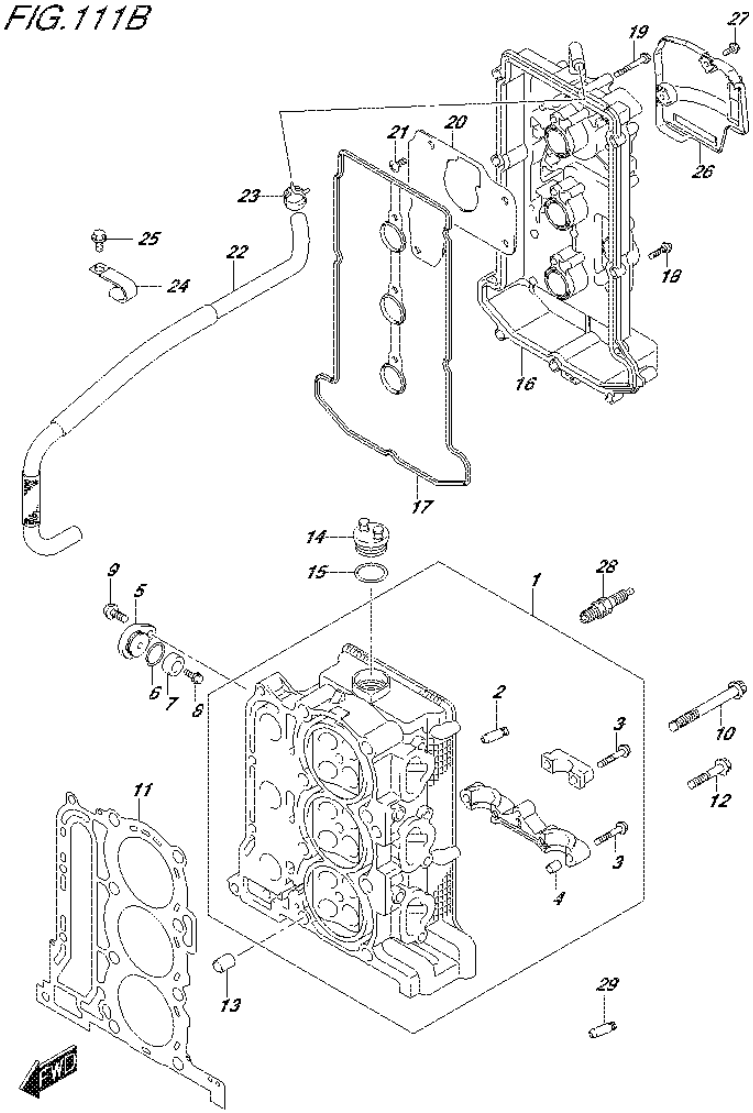

FIG.111B (1-B-3) CYLINDER HEAD (DF40AQH E01)

REF NO.	PART NO.	DESCRIPTION	Q'TY	REMARKS
1	11100-88L00	HEAD ASSY, CYLINDER	1	
2	11115-73G01-001	.GUIDE, VALVE	12	
3	09103-06266	.BOLT (6X40)	17	
4	09206-08001	.PIN (8X11)	14	
5	11261-93J00	COVER, PROTECTION ANODE	2	
6	09280-22019	O RING (D:1.9,ID:21.8)	2	
7-1	55321-87J00	ANODE, PROTECTION	2	
7-2	55321-87J10	ANODE (MAGNESIUM)	1	OPT
8	09103-06281	BOLT (6X14)	2	
9	01550-08207	BOLT	2	
10	11119-87J00	BOLT, CYLINDER HEAD (10X95)	8	
11	11141-88L00	GASKET, CYLINDER HEAD	1	
12	01550-08457	BOLT	4	
13	04211-13189	PIN	2	
14	11382-99E00	CAP, OIL FILLER	1	
15	09280-26006	O RING (D:3.1,ID:26.4)	1	
16	11170-88L10	COVER, CYLINDER HEAD	1	
17	11189-88L00	GASKET, CYLINDER HEAD COVER	1	
18	01547-06257	BOLT	9	
19	01547-06457	BOLT	3	
20	11173-88L00	PLATE, BREATHER	1	
21	02142-0612A	SCREW	4	
22	11174-88L00	HOSE, BREATHER	1	
23	09401-15414	CLIP	2	
24	09403-17303	CLAMP	2	
25	01550-06127	BOLT	2	
26	11194-88L10	GUARD, FUEL HOSE	1	
27	01550-06167	BOLT	2	
28	09482-00446	SPARK PLUG (DCPR6E)	3	NGK
29	11115-73G01-001	GUIDE, VALVE (OS)	4	OPT

FIG.111C

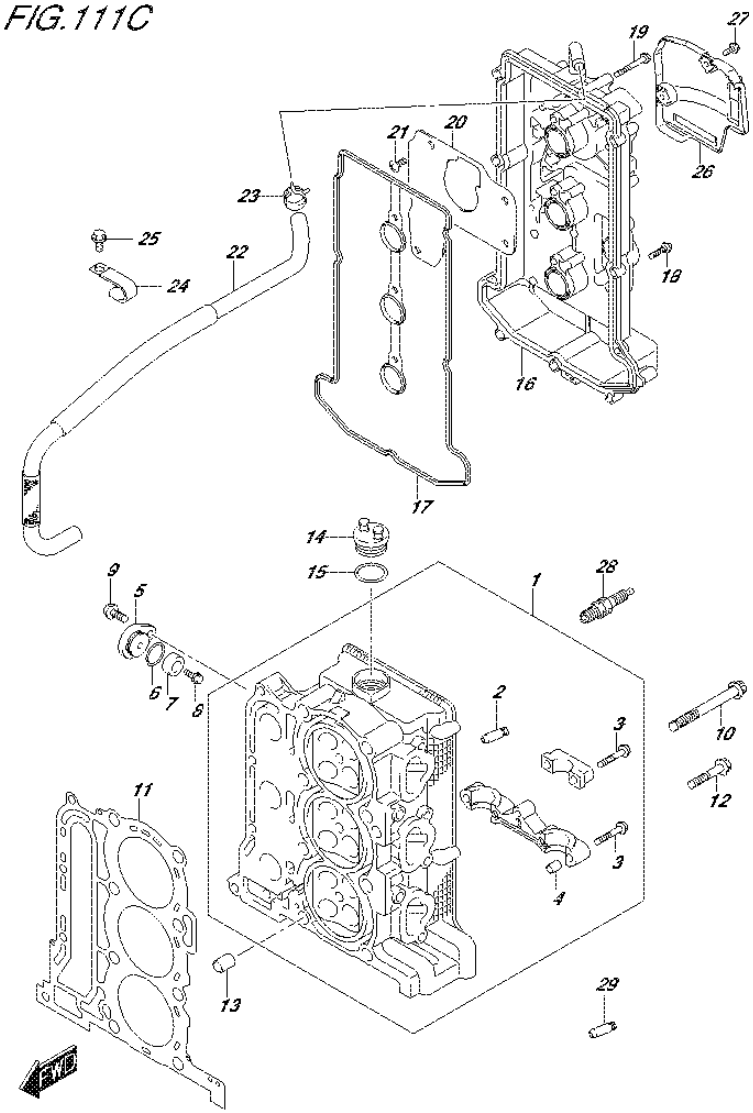

FIG.111C (1-B-4) CYLINDER HEAD (DF40ATH E01)

REF NO.	PART NO.	DESCRIPTION	Q'TY	REMARKS
1	11100-88L00	HEAD ASSY, CYLINDER	1	
2	11115-73G01-001	.GUIDE, VALVE	12	
3	09103-06266	.BOLT (6X40)	17	
4	09206-08001	.PIN (8X11)	14	
5	11261-93J00	COVER, PROTECTION ANODE	2	
6	09280-22019	O RING (D:1.9,ID:21.8)	2	
7-1	55321-87J00	ANODE, PROTECTION	2	
7-2	55321-87J10	ANODE (MAGNESIUM)	1	OPT
8	09103-06281	BOLT (6X14)	2	
9	01550-08207	BOLT	2	
10	11119-87J00	BOLT, CYLINDER HEAD (10X95)	8	
11	11141-88L00	GASKET, CYLINDER HEAD	1	
12	01550-08457	BOLT	4	
13	04211-13189	PIN	2	
14	11382-99E00	CAP, OIL FILLER	1	
15	09280-26006	O RING (D:3.1,ID:26.4)	1	
16	11170-88L10	COVER, CYLINDER HEAD	1	
17	11189-88L00	GASKET, CYLINDER HEAD COVER	1	
18	01547-06257	BOLT	9	
19	01547-06457	BOLT	3	
20	11173-88L00	PLATE, BREATHER	1	
21	02142-0612A	SCREW	4	
22	11174-88L00	HOSE, BREATHER	1	
23	09401-15414	CLIP	2	
24	09403-17303	CLAMP	2	
25	01550-06127	BOLT	2	
26	11194-88L10	GUARD, FUEL HOSE	1	
27	01550-06167	BOLT	2	
28	09482-00446	SPARK PLUG (DCPR6E)	3	NGK
29	11115-73G01-001	GUIDE, VALVE (OS)	4	OPT

FIG.111D

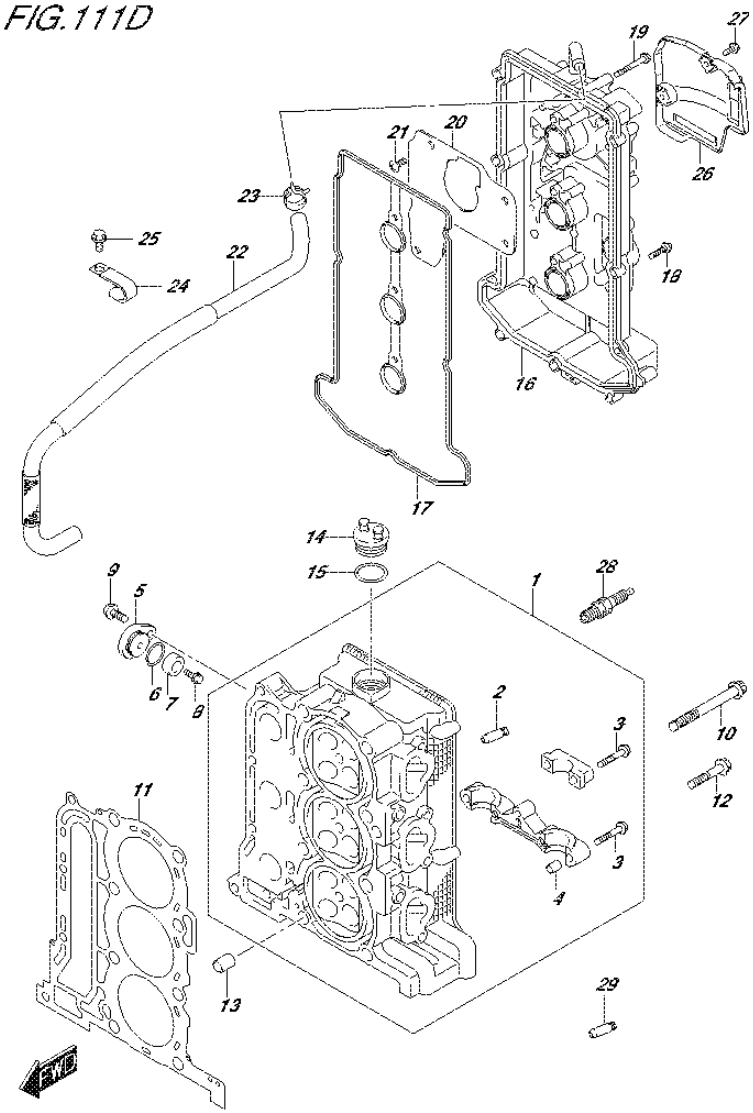

FIG.111D (1-B-5) CYLINDER HEAD (DF40AST E34)

REF NO.	PART NO.	DESCRIPTION	Q'TY	REMARKS
1	11100-88L00	HEAD ASSY, CYLINDER	1	
2	11115-73G01-001	.GUIDE, VALVE	12	
3	09103-06266	.BOLT (6X40)	17	
4	09206-08001	.PIN (8X11)	14	
5	11261-93J00	COVER, PROTECTION ANODE	2	
6	09280-22019	O RING (D:1.9,ID:21.8)	2	
7-1	55321-87J00	ANODE, PROTECTION	2	
7-2	55321-87J10	ANODE (MAGNESIUM)	1	OPT
8	09103-06281	BOLT (6X14)	2	
9	01550-08207	BOLT	2	
10	11119-87J00	BOLT, CYLINDER HEAD (10X95)	8	
11	11141-88L00	GASKET, CYLINDER HEAD	1	
12	01550-08457	BOLT	4	
13	04211-13189	PIN	2	
14	11382-99E00	CAP, OIL FILLER	1	
15	09280-26006	O RING (D:3.1,ID:26.4)	1	
16	11170-88L10	COVER, CYLINDER HEAD	1	
17	11189-88L00	GASKET, CYLINDER HEAD COVER	1	
18	01547-06257	BOLT	9	
19	01547-06457	BOLT	3	
20	11173-88L00	PLATE, BREATHER	1	
21	02142-0612A	SCREW	4	
22	11174-88L00	HOSE, BREATHER	1	
23	09401-15414	CLIP	1	
24	09403-17303	CLAMP	2	
25	01550-06127	BOLT	2	
26	11194-88L10	GUARD, FUEL HOSE	1	
27	01550-06167	BOLT	2	
28	09482-00446	SPARK PLUG (DCPR6E)	3	NGK
29	11115-73G01-001	GUIDE, VALVE (OS)	4	OPT

FIG.111E

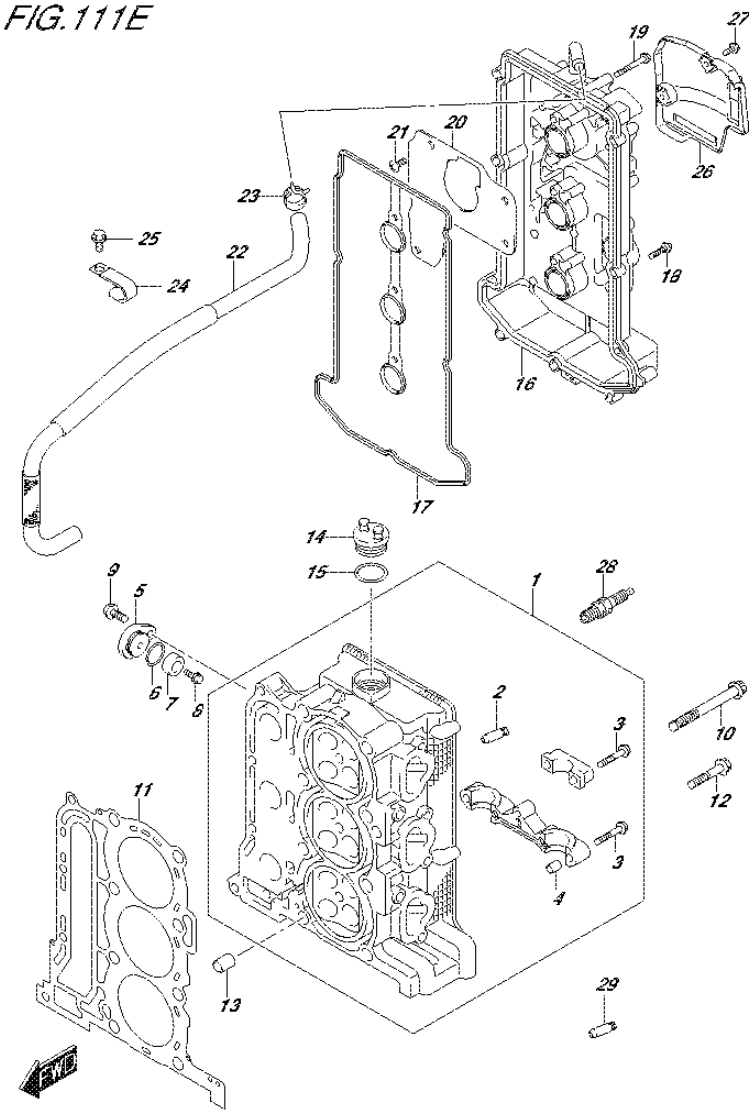

FIG.111E (1-B-6) CYLINDER HEAD (DF50A E01)

REF NO.	PART NO.	DESCRIPTION	Q'TY	REMARKS
1	11100-88L00	HEAD ASSY, CYLINDER	1	
2	11115-73G01-001	.GUIDE, VALVE	12	
3	09103-06266	.BOLT (6X40)	17	
4	09206-08001	.PIN (8X11)	14	
5	11261-93J00	COVER, PROTECTION ANODE	2	
6	09280-22019	O RING (D:1.9,ID:21.8)	2	
7-1	55321-87J00	ANODE, PROTECTION	2	
7-2	55321-87J10	ANODE (MAGNESIUM)	1	OPT
8	09103-06281	BOLT (6X14)	2	
9	01550-08207	BOLT	2	
10	11119-87J00	BOLT, CYLINDER HEAD (10X95)	8	
11	11141-88L00	GASKET, CYLINDER HEAD	1	
12	01550-08457	BOLT	4	
13	04211-13189	PIN	2	
14	11382-99E00	CAP, OIL FILLER	1	
15	09280-26006	O RING (D:3.1,ID:26.4)	1	
16	11170-88L10	COVER, CYLINDER HEAD	1	
17	11189-88L00	GASKET, CYLINDER HEAD COVER	1	
18	01547-06257	BOLT	9	
19	01547-06457	BOLT	3	
20	11173-88L00	PLATE, BREATHER	1	
21	02142-0612A	SCREW	4	
22	11174-88L00	HOSE, BREATHER	1	
23	09401-15414	CLIP	2	
24	09403-17303	CLAMP	2	
25	01550-06127	BOLT	2	
26	11194-88L10	GUARD, FUEL HOSE	1	
27	01550-06167	BOLT	2	
28	09482-00446	SPARK PLUG (DCPR6E)	3	NGK
29	11115-73G01-001	GUIDE, VALVE (OS)	4	OPT

FIG.111F

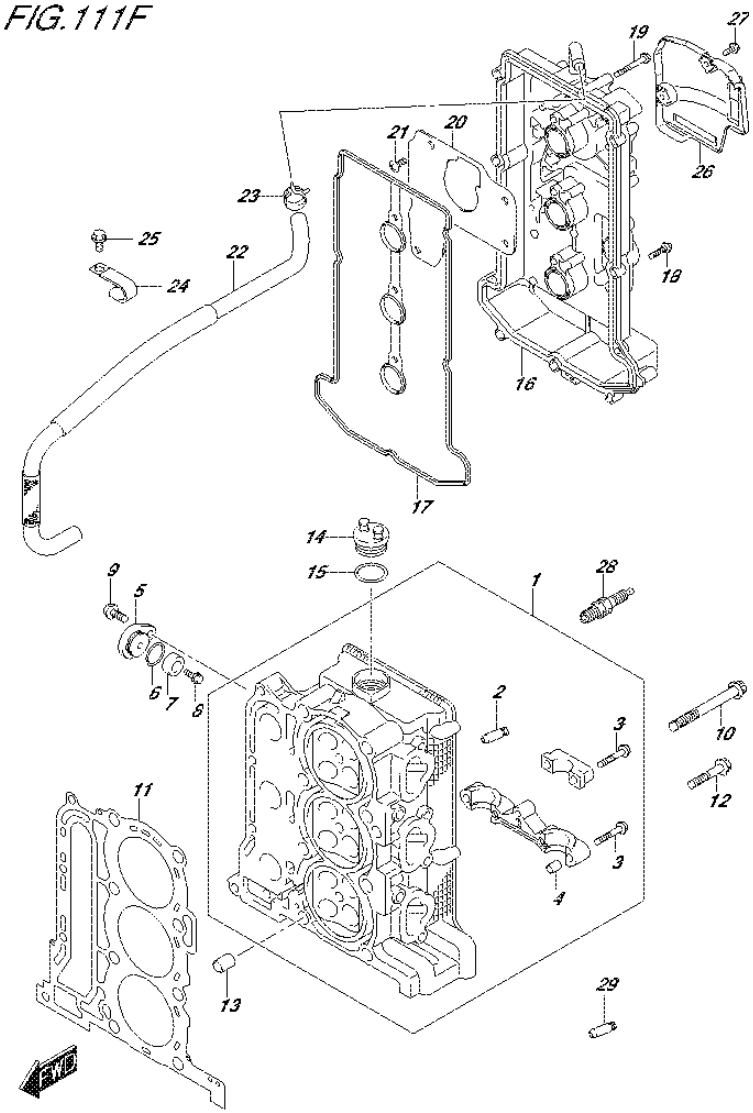

FIG.111F (1-B-7) CYLINDER HEAD (DF50ATH E01)

REF NO.	PART NO.	DESCRIPTION	Q'TY	REMARKS
1	11100-88L00	HEAD ASSY, CYLINDER	1	
2	11115-73G01-001	.GUIDE, VALVE	12	
3	09103-06266	.BOLT (6X40)	17	
4	09206-08001	.PIN (8X11)	14	
5	11261-93J00	COVER, PROTECTION ANODE	2	
6	09280-22019	O RING (D:1.9,ID:21.8)	2	
7-1	55321-87J00	ANODE, PROTECTION	2	
7-2	55321-87J10	ANODE (MAGNESIUM)	1	OPT
8	09103-06281	BOLT (6X14)	2	
9	01550-08207	BOLT	2	
10	11119-87J00	BOLT, CYLINDER HEAD (10X95)	8	
11	11141-88L00	GASKET, CYLINDER HEAD	1	
12	01550-08457	BOLT	4	
13	04211-13189	PIN	2	
14	11382-99E00	CAP, OIL FILLER	1	
15	09280-26006	O RING (D:3.1,ID:26.4)	1	
16	11170-88L10	COVER, CYLINDER HEAD	1	
17	11189-88L00	GASKET, CYLINDER HEAD COVER	1	
18	01547-06257	BOLT	9	
19	01547-06457	BOLT	3	
20	11173-88L00	PLATE, BREATHER	1	
21	02142-0612A	SCREW	4	
22	11174-88L00	HOSE, BREATHER	1	
23	09401-15414	CLIP	2	
24	09403-17303	CLAMP	2	
25	01550-06127	BOLT	2	
26	11194-88L10	GUARD, FUEL HOSE	1	
27	01550-06167	BOLT	2	
28	09482-00446	SPARK PLUG (DCPR6E)	3	NGK
29	11115-73G01-001	GUIDE, VALVE (OS)	4	OPT

FIG.111G

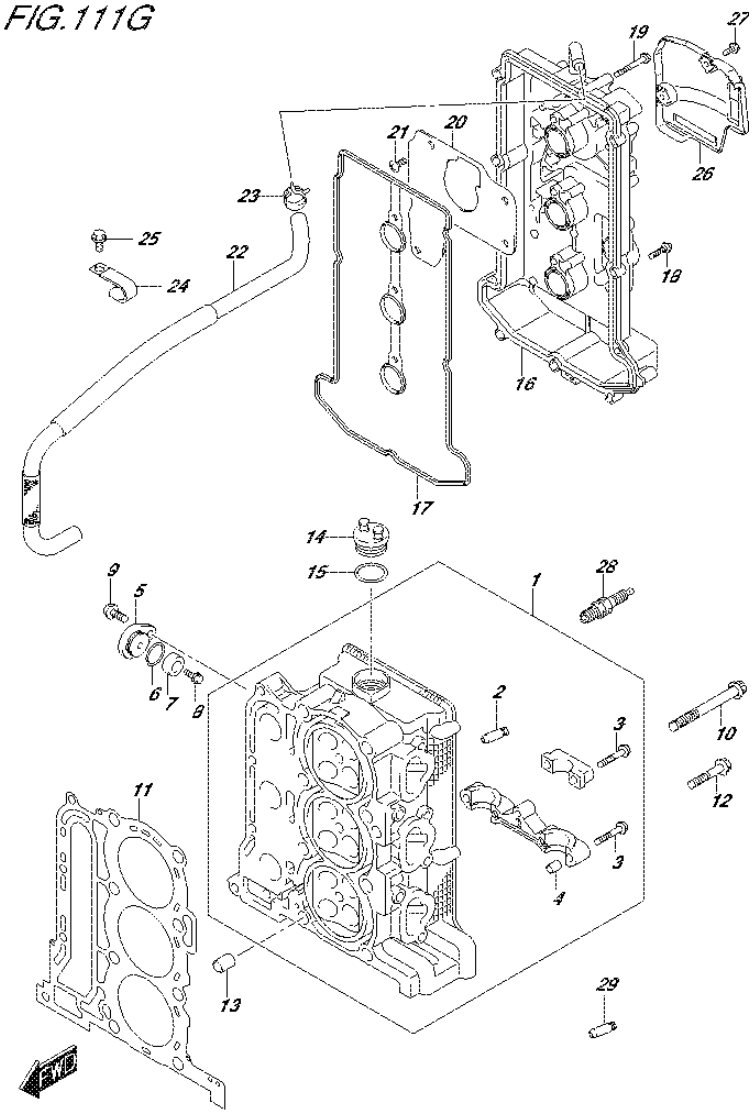

FIG.111G (1-B-8) CYLINDER HEAD (DF60A E01)

REF NO.	PART NO.	DESCRIPTION	Q'TY	REMARKS
1	11100-88L00	HEAD ASSY, CYLINDER	1	
2	11115-73G01-001	.GUIDE, VALVE	12	
3	09103-06266	.BOLT (6X40)	17	
4	09206-08001	.PIN (8X11)	14	
5	11261-93J00	COVER, PROTECTION ANODE	2	
6	09280-22019	O RING (D:1.9,ID:21.8)	2	
7-1	55321-87J00	ANODE, PROTECTION	2	
7-2	55321-87J10	ANODE (MAGNESIUM)	1	OPT
8	09103-06281	BOLT (6X14)	2	
9	01550-08207	BOLT	2	
10	11119-87J00	BOLT, CYLINDER HEAD (10X95)	8	
11	11141-88L00	GASKET, CYLINDER HEAD	1	
12	01550-08457	BOLT	4	
13	04211-13189	PIN	2	
14	11382-99E00	CAP, OIL FILLER	1	
15	09280-26006	O RING (D:3.1,ID:26.4)	1	
16	11170-88L10	COVER, CYLINDER HEAD	1	
17	11189-88L00	GASKET, CYLINDER HEAD COVER	1	
18	01547-06257	BOLT	9	
19	01547-06457	BOLT	3	
20	11173-88L00	PLATE, BREATHER	1	
21	02142-0612A	SCREW	4	
22	11174-88L00	HOSE, BREATHER	1	
23	09401-15414	CLIP	1	
24	09403-17303	CLAMP	2	
25	01550-06127	BOLT	2	
26	11194-88L10	GUARD, FUEL HOSE	1	
27	01550-06167	BOLT	2	
28	09482-00446	SPARK PLUG (DCPR6E)	3	NGK
29	11115-73G01-001	GUIDE, VALVE (OS)	4	OPT

FIG.111H

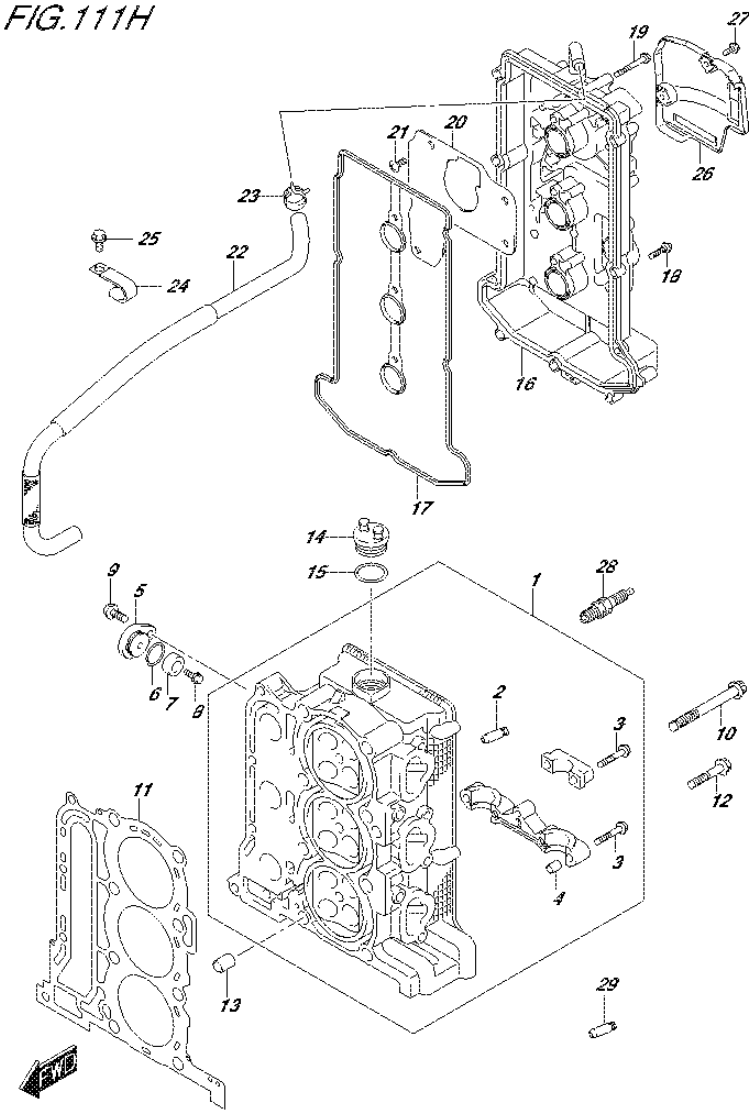

FIG.111H (1-B-9) CYLINDER HEAD (DF60A E40)

REF NO.	PART NO.	DESCRIPTION	Q'TY	REMARKS
1	11100-88L00	HEAD ASSY, CYLINDER	1	
2	11115-73G01-001	.GUIDE, VALVE	12	
3	09103-06266	.BOLT (6X40)	17	
4	09206-08001	.PIN (8X11)	14	
5	11261-93J00	COVER, PROTECTION ANODE	2	
6	09280-22019	O RING (D:1.9,ID:21.8)	2	
7-1	55321-87J00	ANODE, PROTECTION	2	
7-2	55321-87J10	ANODE (MAGNESIUM)	1	OPT
8	09103-06281	BOLT (6X14)	2	
9	01550-08207	BOLT	2	
10	11119-87J00	BOLT, CYLINDER HEAD (10X95)	8	
11	11141-88L00	GASKET, CYLINDER HEAD	1	
12	01550-08457	BOLT	4	
13	04211-13189	PIN	2	
14	11382-99E00	CAP, OIL FILLER	1	
15	09280-26006	O RING (D:3.1,ID:26.4)	1	
16	11170-88L10	COVER, CYLINDER HEAD	1	
17	11189-88L00	GASKET, CYLINDER HEAD COVER	1	
18	01547-06257	BOLT	9	
19	01547-06457	BOLT	3	
20	11173-88L00	PLATE, BREATHER	1	
21	02142-0612A	SCREW	4	
22	11174-88L00	HOSE, BREATHER	1	
23	09401-15414	CLIP	1	
24	09403-17303	CLAMP	2	
25	01550-06127	BOLT	2	
26	11194-88L10	GUARD, FUEL HOSE	1	
27	01550-06167	BOLT	2	
28	09482-00446	SPARK PLUG (DCPR6E)	3	NGK
29	11115-73G01-001	GUIDE, VALVE (OS)	4	OPT

FIG.111J

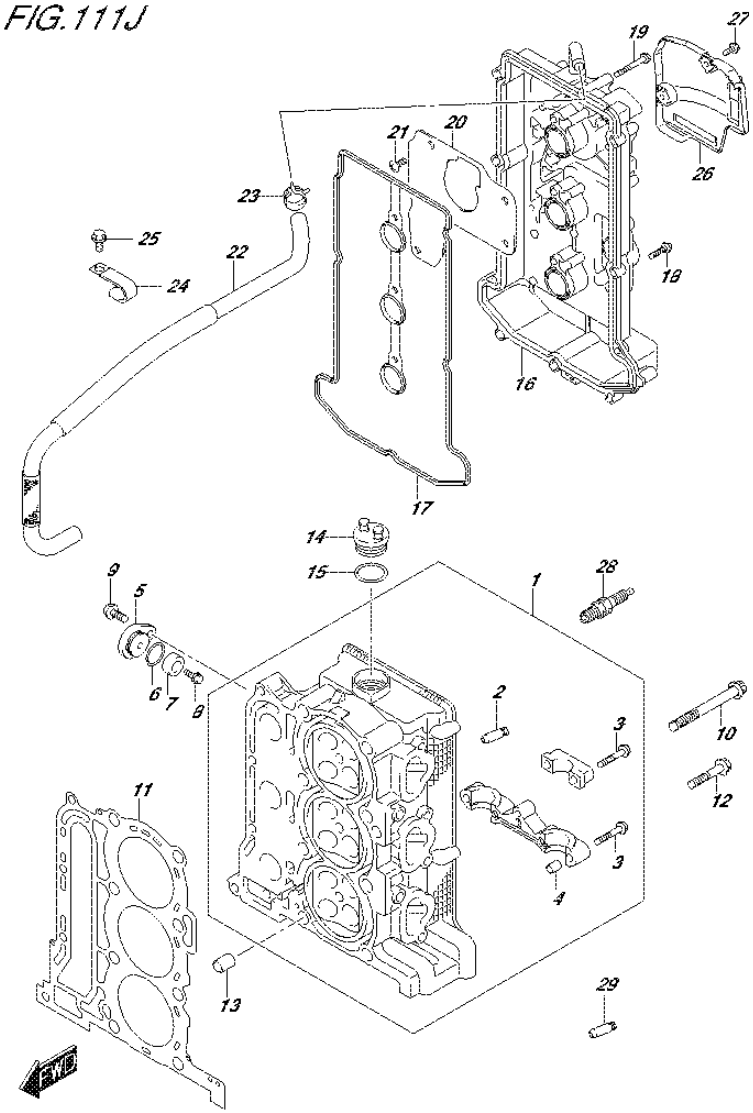

FIG.111J (1-B-10) CYLINDER HEAD (DF60AQH E01)

REF NO.	PART NO.	DESCRIPTION	Q'TY	REMARKS
1	11100-88L00	HEAD ASSY, CYLINDER	1	
2	11115-73G01-001	.GUIDE, VALVE	12	
3	09103-06266	.BOLT (6X40)	17	
4	09206-08001	.PIN (8X11)	14	
5	11261-93J00	COVER, PROTECTION ANODE	2	
6	09280-22019	O RING (D:1.9,ID:21.8)	2	
7-1	55321-87J00	ANODE, PROTECTION	2	
7-2	55321-87J10	ANODE (MAGNESIUM)	1	OPT
8	09103-06281	BOLT (6X14)	2	
9	01550-08207	BOLT	2	
10	11119-87J00	BOLT, CYLINDER HEAD (10X95)	8	
11	11141-88L00	GASKET, CYLINDER HEAD	1	
12	01550-08457	BOLT	4	
13	04211-13189	PIN	2	
14	11382-99E00	CAP, OIL FILLER	1	
15	09280-26006	O RING (D:3.1,ID:26.4)	1	
16	11170-88L10	COVER, CYLINDER HEAD	1	
17	11189-88L00	GASKET, CYLINDER HEAD COVER	1	
18	01547-06257	BOLT	9	
19	01547-06457	BOLT	3	
20	11173-88L00	PLATE, BREATHER	1	
21	02142-0612A	SCREW	4	
22	11174-88L00	HOSE, BREATHER	1	
23	09401-15414	CLIP	1	
24	09403-17303	CLAMP	2	
25	01550-06127	BOLT	2	
26	11194-88L10	GUARD, FUEL HOSE	1	
27	01550-06167	BOLT	2	
28	09482-00446	SPARK PLUG (DCPR6E)	3	NGK
29	11115-73G01-001	GUIDE, VALVE (OS)	4	OPT

FIG.111K

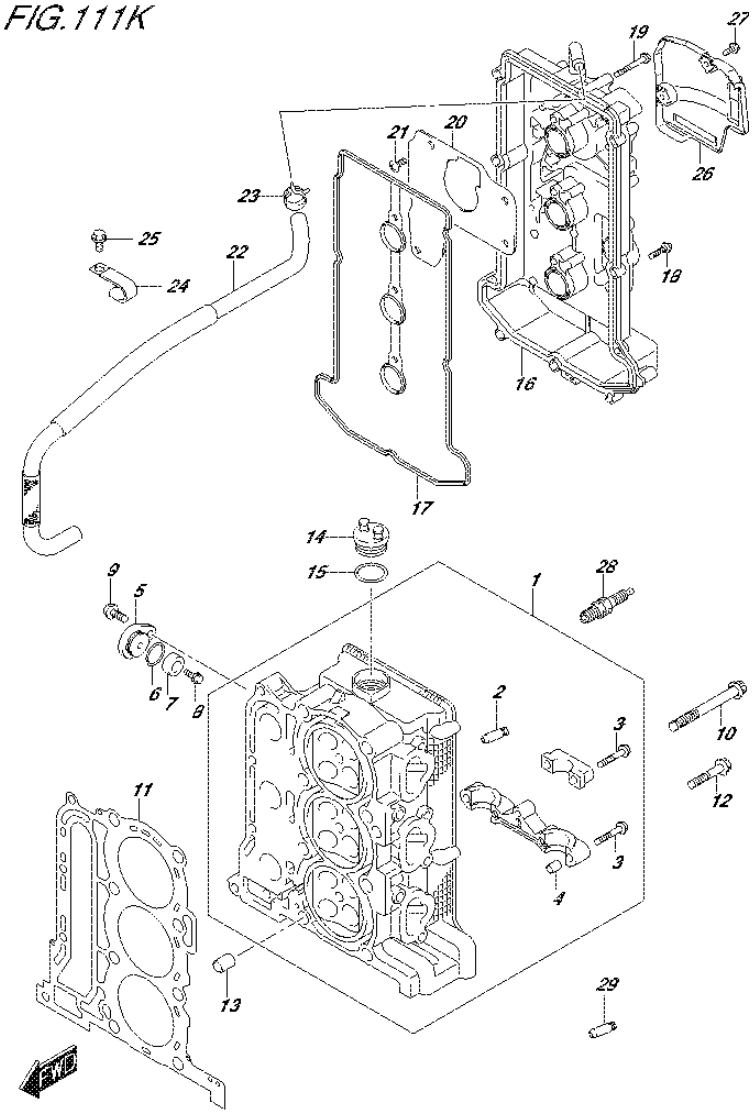

FIG.111K (1-B-11) CYLINDER HEAD (DF60AQH E40)

REF NO.	PART NO.	DESCRIPTION	Q'TY	REMARKS
1	11100-88L00	HEAD ASSY, CYLINDER	1	
2	11115-73G01-001	.GUIDE, VALVE	12	
3	09103-06266	.BOLT (6X40)	17	
4	09206-08001	.PIN (8X11)	14	
5	11261-93J00	COVER, PROTECTION ANODE	2	
6	09280-22019	O RING (D:1.9,ID:21.8)	2	
7-1	55321-87J00	ANODE, PROTECTION	2	
7-2	55321-87J10	ANODE (MAGNESIUM)	1	OPT
8	09103-06281	BOLT (6X14)	2	
9	01550-08207	BOLT	2	
10	11119-87J00	BOLT, CYLINDER HEAD (10X95)	8	
11	11141-88L00	GASKET, CYLINDER HEAD	1	
12	01550-08457	BOLT	4	
13	04211-13189	PIN	2	
14	11382-99E00	CAP, OIL FILLER	1	
15	09280-26006	O RING (D:3.1,ID:26.4)	1	
16	11170-88L10	COVER, CYLINDER HEAD	1	
17	11189-88L00	GASKET, CYLINDER HEAD COVER	1	
18	01547-06257	BOLT	9	
19	01547-06457	BOLT	3	
20	11173-88L00	PLATE, BREATHER	1	
21	02142-0612A	SCREW	4	
22	11174-88L00	HOSE, BREATHER	1	
23	09401-15414	CLIP	1	
24	09403-17303	CLAMP	2	
25	01550-06127	BOLT	2	
26	11194-88L10	GUARD, FUEL HOSE	1	
27	01550-06167	BOLT	2	
28	09482-00446	SPARK PLUG (DCPR6E)	3	NGK
29	11115-73G01-001	GUIDE, VALVE (OS)	4	OPT

FIG.111L

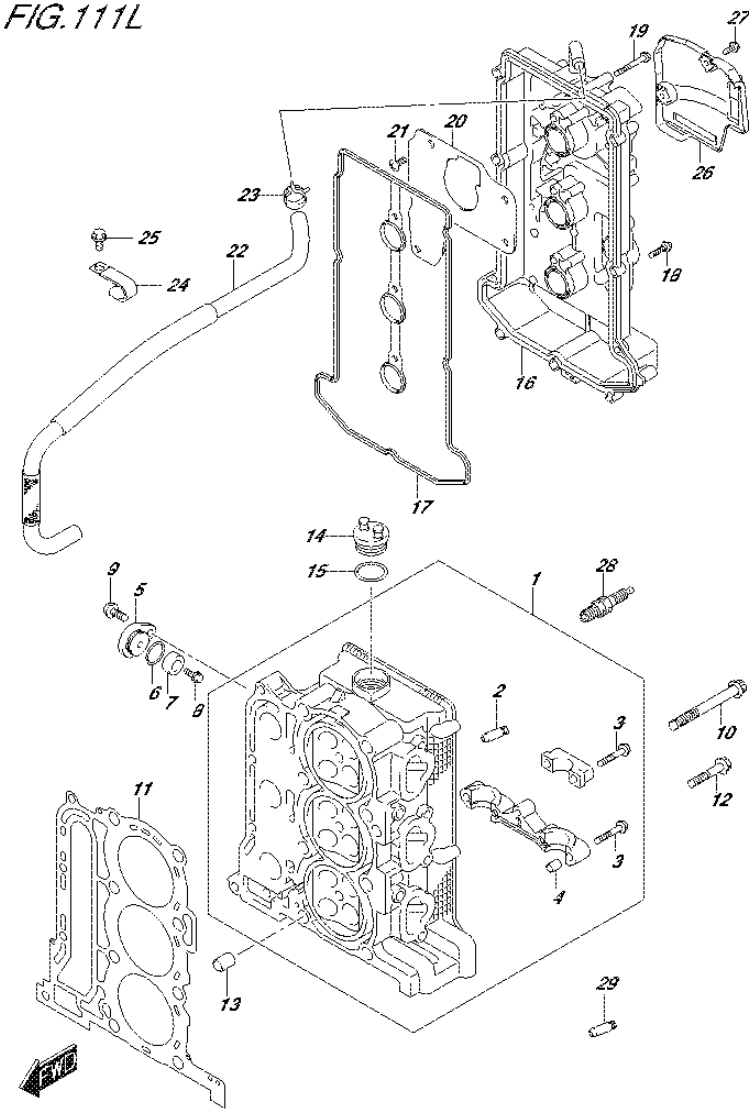

FIG.111L (1-B-12) CYLINDER HEAD (DF60ATH E01)

REF NO.	PART NO.	DESCRIPTION	Q'TY	REMARKS
1	11100-88L00	HEAD ASSY, CYLINDER	1	
2	11115-73G01-001	.GUIDE, VALVE	12	
3	09103-06266	.BOLT (6X40)	17	
4	09206-08001	.PIN (8X11)	14	
5	11261-93J00	COVER, PROTECTION ANODE	2	
6	09280-22019	O RING (D:1.9,ID:21.8)	2	
7-1	55321-87J00	ANODE, PROTECTION	2	
7-2	55321-87J10	ANODE (MAGNESIUM)	1	OPT
8	09103-06281	BOLT (6X14)	2	
9	01550-08207	BOLT	2	
10	11119-87J00	BOLT, CYLINDER HEAD (10X95)	8	
11	11141-88L00	GASKET, CYLINDER HEAD	1	
12	01550-08457	BOLT	4	
13	04211-13189	PIN	2	
14	11382-99E00	CAP, OIL FILLER	1	
15	09280-26006	O RING (D:3.1,ID:26.4)	1	
16	11170-88L10	COVER, CYLINDER HEAD	1	
17	11189-88L00	GASKET, CYLINDER HEAD COVER	1	
18	01547-06257	BOLT	9	
19	01547-06457	BOLT	3	
20	11173-88L00	PLATE, BREATHER	1	
21	02142-0612A	SCREW	4	
22	11174-88L00	HOSE, BREATHER	1	
23	09401-15414	CLIP	1	
24	09403-17303	CLAMP	2	
25	01550-06127	BOLT	2	
26	11194-88L10	GUARD, FUEL HOSE	1	
27	01550-06167	BOLT	2	
28	09482-00446	SPARK PLUG (DCPR6E)	3	NGK
29	11115-73G01-001	GUIDE, VALVE (OS)	4	OPT

FIG.111M

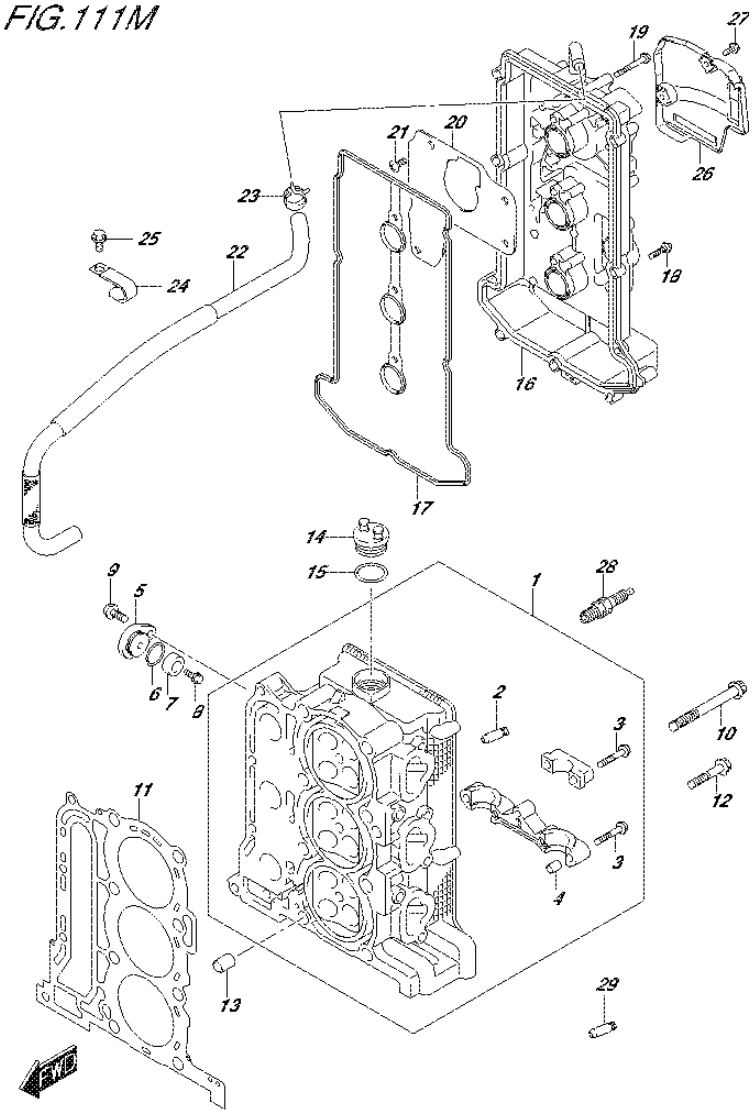

FIG.111M (1-B-13) CYLINDER HEAD (DF60ATH E40)

REF NO.	PART NO.	DESCRIPTION	Q'TY	REMARKS
1	11100-88L00	HEAD ASSY, CYLINDER	1	
2	11115-73G01-001	.GUIDE, VALVE	12	
3	09103-06266	.BOLT (6X40)	17	
4	09206-08001	.PIN (8X11)	14	
5	11261-93J00	COVER, PROTECTION ANODE	2	
6	09280-22019	O RING (D:1.9,ID:21.8)	2	
7-1	55321-87J00	ANODE, PROTECTION	2	
7-2	55321-87J10	ANODE (MAGNESIUM)	1	OPT
8	09103-06281	BOLT (6X14)	2	
9	01550-08207	BOLT	2	
10	11119-87J00	BOLT, CYLINDER HEAD (10X95)	8	
11	11141-88L00	GASKET, CYLINDER HEAD	1	
12	01550-08457	BOLT	4	
13	04211-13189	PIN	2	
14	11382-99E00	CAP, OIL FILLER	1	
15	09280-26006	O RING (D:3.1,ID:26.4)	1	
16	11170-88L10	COVER, CYLINDER HEAD	1	
17	11189-88L00	GASKET, CYLINDER HEAD COVER	1	
18	01547-06257	BOLT	9	
19	01547-06457	BOLT	3	
20	11173-88L00	PLATE, BREATHER	1	
21	02142-0612A	SCREW	4	
22	11174-88L00	HOSE, BREATHER	1	
23	09401-15414	CLIP	1	
24	09403-17303	CLAMP	2	
25	01550-06127	BOLT	2	
26	11194-88L10	GUARD, FUEL HOSE	1	
27	01550-06167	BOLT	2	
28	09482-00446	SPARK PLUG (DCPR6E)	3	NGK
29	11115-73G01-001	GUIDE, VALVE (OS)	4	OPT

FIG.111N

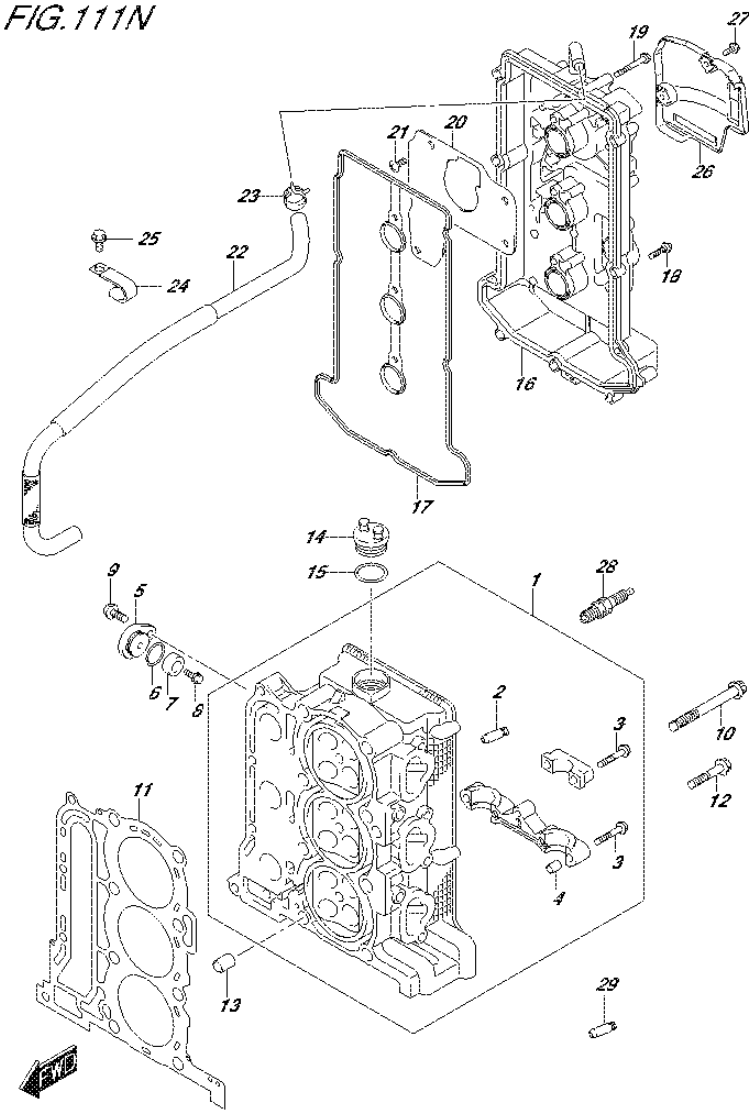

FIG.111N (1-B-14) CYLINDER HEAD (DF50AVT E01)

REF NO.	PART NO.	DESCRIPTION	Q'TY	REMARKS
1	11100-88L00	HEAD ASSY, CYLINDER	1	
2	11115-73G01-001	.GUIDE, VALVE	12	
3	09103-06266	.BOLT (6X40)	17	
4	09206-08001	.PIN (8X11)	14	
5	11261-93J00	COVER, PROTECTION ANODE	2	
6	09280-22019	O RING (D:1.9,ID:21.8)	2	
7-1	55321-87J00	ANODE, PROTECTION	2	
7-2	55321-87J10	ANODE (MAGNESIUM)	1	OPT
8	09103-06281	BOLT (6X14)	2	
9	01550-08207	BOLT	2	
10	11119-87J00	BOLT, CYLINDER HEAD (10X95)	8	
11	11141-88L00	GASKET, CYLINDER HEAD	1	
12	01550-08457	BOLT	4	
13	04211-13189	PIN	2	
14	11382-99E00	CAP, OIL FILLER	1	
15	09280-26006	O RING (D:3.1,ID:26.4)	1	
16	11170-88L10	COVER, CYLINDER HEAD	1	
17	11189-88L00	GASKET, CYLINDER HEAD COVER	1	
18	01547-06257	BOLT	9	
19	01547-06457	BOLT	3	
20	11173-88L00	PLATE, BREATHER	1	
21	02142-0612A	SCREW	4	
22	11174-88L00	HOSE, BREATHER	1	
23	09401-15414	CLIP	2	
24	09403-17303	CLAMP	2	
25	01550-06127	BOLT	2	
26	11194-88L10	GUARD, FUEL HOSE	1	
27	01550-06167	BOLT	2	
28	09482-00446	SPARK PLUG (DCPR6E)	3	NGK
29	11115-73G01-001	GUIDE, VALVE (OS)	4	OPT

FIG.111P

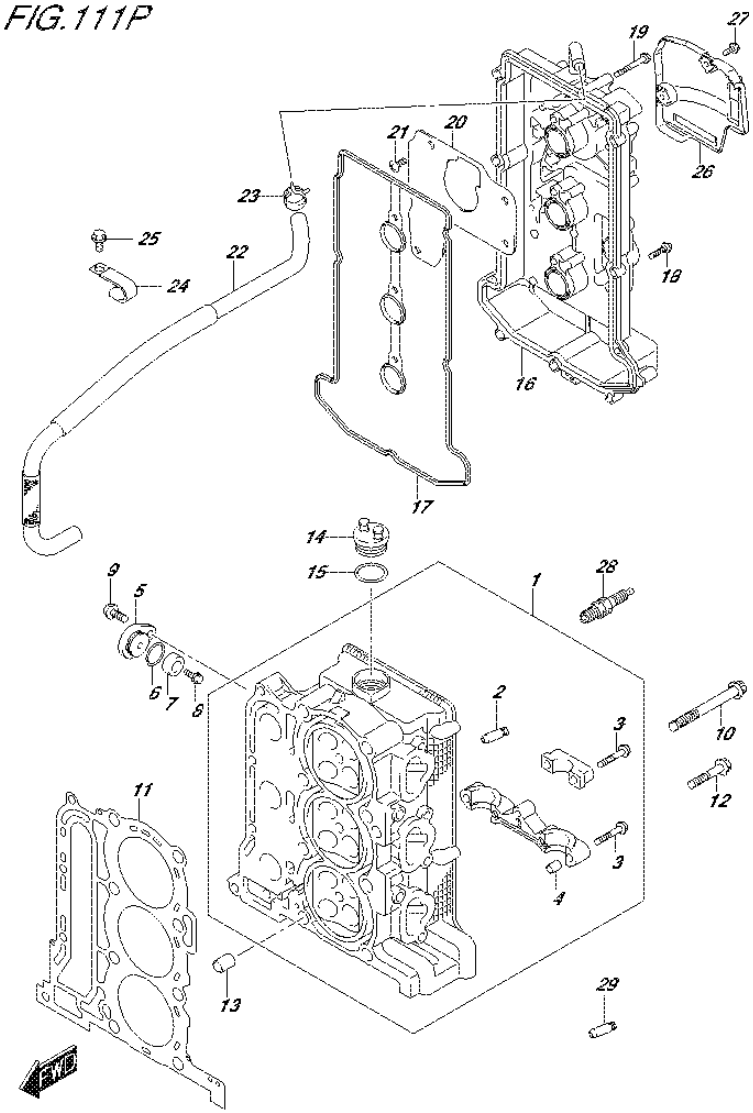

FIG.111P (1-B-15) CYLINDER HEAD (DF50AVTH E01)

REF NO.	PART NO.	DESCRIPTION	Q'TY	REMARKS
1	11100-88L00	HEAD ASSY, CYLINDER	1	
2	11115-73G01-001	.GUIDE, VALVE	12	
3	09103-06266	.BOLT (6X40)	17	
4	09206-08001	.PIN (8X11)	14	
5	11261-93J00	COVER, PROTECTION ANODE	2	
6	09280-22019	O RING (D:1.9,ID:21.8)	2	
7-1	55321-87J00	ANODE, PROTECTION	2	
7-2	55321-87J10	ANODE (MAGNESIUM)	1	OPT
8	09103-06281	BOLT (6X14)	2	
9	01550-08207	BOLT	2	
10	11119-87J00	BOLT, CYLINDER HEAD (10X95)	8	
11	11141-88L00	GASKET, CYLINDER HEAD	1	
12	01550-08457	BOLT	4	
13	04211-13189	PIN	2	
14	11382-99E00	CAP, OIL FILLER	1	
15	09280-26006	O RING (D:3.1,ID:26.4)	1	
16	11170-88L10	COVER, CYLINDER HEAD	1	
17	11189-88L00	GASKET, CYLINDER HEAD COVER	1	
18	01547-06257	BOLT	9	
19	01547-06457	BOLT	3	
20	11173-88L00	PLATE, BREATHER	1	
21	02142-0612A	SCREW	4	
22	11174-88L00	HOSE, BREATHER	1	
23	09401-15414	CLIP	2	
24	09403-17303	CLAMP	2	
25	01550-06127	BOLT	2	
26	11194-88L10	GUARD, FUEL HOSE	1	
27	01550-06167	BOLT	2	
28	09482-00446	SPARK PLUG (DCPR6E)	3	NGK
29	11115-73G01-001	GUIDE, VALVE (OS)	4	OPT

FIG.111R

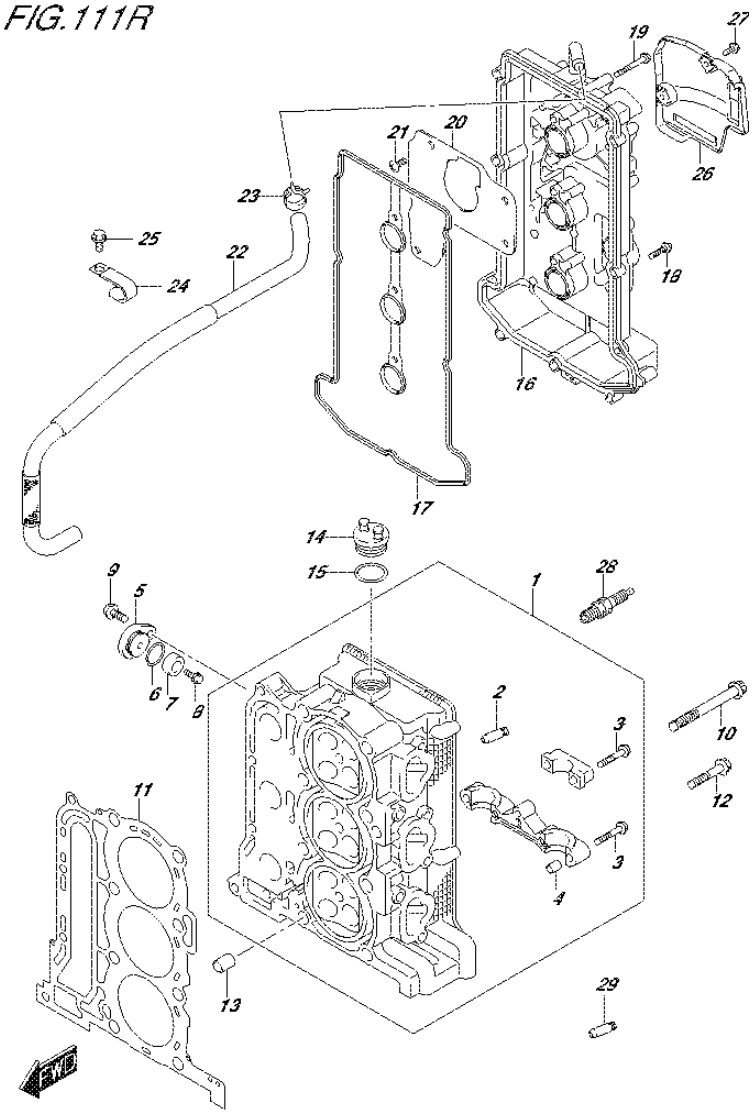

FIG.111R (1-C-2) CYLINDER HEAD (DF60AVT E01)

REF NO.	PART NO.	DESCRIPTION	Q'TY	REMARKS
1	11100-88L00	HEAD ASSY, CYLINDER	1	
2	11115-73G01-001	.GUIDE, VALVE	12	
3	09103-06266	.BOLT (6X40)	17	
4	09206-08001	.PIN (8X11)	14	
5	11261-93J00	COVER, PROTECTION ANODE	2	
6	09280-22019	O RING (D:1.9,ID:21.8)	2	
7-1	55321-87J00	ANODE, PROTECTION	2	
7-2	55321-87J10	ANODE (MAGNESIUM)	1	OPT
8	09103-06281	BOLT (6X14)	2	
9	01550-08207	BOLT	2	
10	11119-87J00	BOLT, CYLINDER HEAD (10X95)	8	
11	11141-88L00	GASKET, CYLINDER HEAD	1	
12	01550-08457	BOLT	4	
13	04211-13189	PIN	2	
14	11382-99E00	CAP, OIL FILLER	1	
15	09280-26006	O RING (D:3.1,ID:26.4)	1	
16	11170-88L10	COVER, CYLINDER HEAD	1	
17	11189-88L00	GASKET, CYLINDER HEAD COVER	1	
18	01547-06257	BOLT	9	
19	01547-06457	BOLT	3	
20	11173-88L00	PLATE, BREATHER	1	
21	02142-0612A	SCREW	4	
22	11174-88L00	HOSE, BREATHER	1	
23	09401-15414	CLIP	1	
24	09403-17303	CLAMP	2	
25	01550-06127	BOLT	2	
26	11194-88L10	GUARD, FUEL HOSE	1	
27	01550-06167	BOLT	2	
28	09482-00446	SPARK PLUG (DCPR6E)	3	NGK
29	11115-73G01-001	GUIDE, VALVE (OS)	4	OPT

FIG.111S

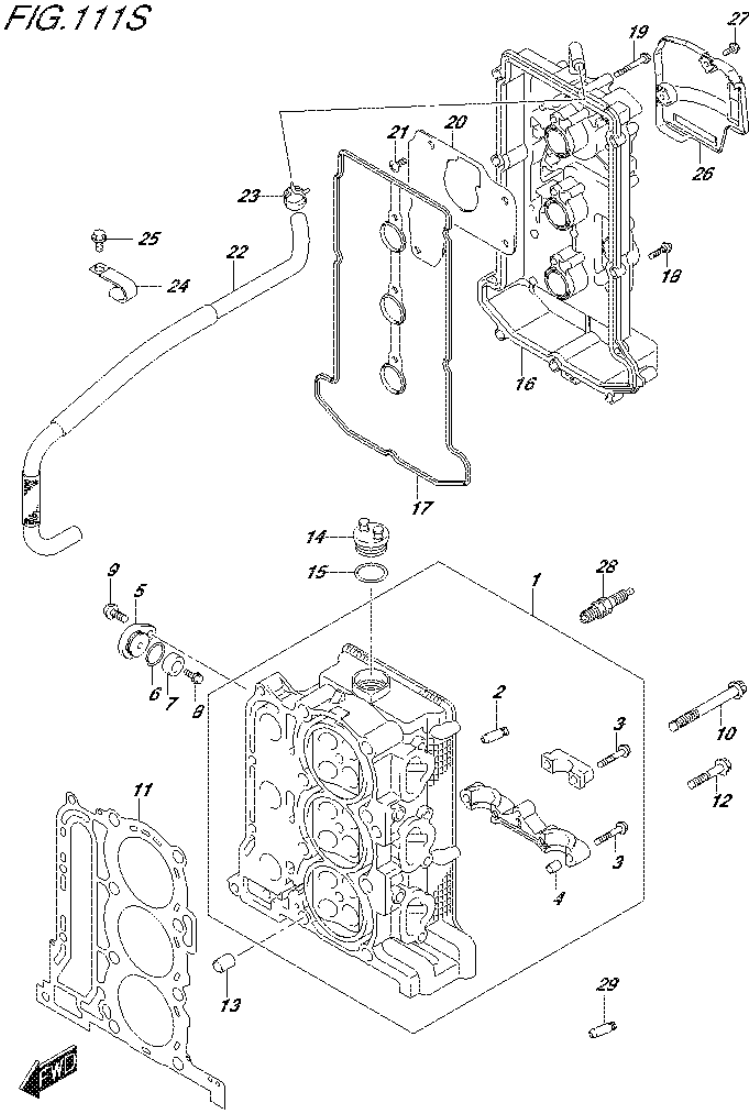

FIG.111S (1-C-3) CYLINDER HEAD (DF60AVT E40)

REF NO.	PART NO.	DESCRIPTION	Q'TY	REMARKS
1	11100-88L00	HEAD ASSY, CYLINDER	1	
2	11115-73G01-001	.GUIDE, VALVE	12	
3	09103-06266	.BOLT (6X40)	17	
4	09206-08001	.PIN (8X11)	14	
5	11261-93J00	COVER, PROTECTION ANODE	2	
6	09280-22019	O RING (D:1.9,ID:21.8)	2	
7-1	55321-87J00	ANODE, PROTECTION	2	
7-2	55321-87J10	ANODE (MAGNESIUM)	1	OPT
8	09103-06281	BOLT (6X14)	2	
9	01550-08207	BOLT	2	
10	11119-87J00	BOLT, CYLINDER HEAD (10X95)	8	
11	11141-88L00	GASKET, CYLINDER HEAD	1	
12	01550-08457	BOLT	4	
13	04211-13189	PIN	2	
14	11382-99E00	CAP, OIL FILLER	1	
15	09280-26006	O RING (D:3.1,ID:26.4)	1	
16	11170-88L10	COVER, CYLINDER HEAD	1	
17	11189-88L00	GASKET, CYLINDER HEAD COVER	1	
18	01547-06257	BOLT	9	
19	01547-06457	BOLT	3	
20	11173-88L00	PLATE, BREATHER	1	
21	02142-0612A	SCREW	4	
22	11174-88L00	HOSE, BREATHER	1	
23	09401-15414	CLIP	1	
24	09403-17303	CLAMP	2	
25	01550-06127	BOLT	2	
26	11194-88L10	GUARD, FUEL HOSE	1	
27	01550-06167	BOLT	2	
28	09482-00446	SPARK PLUG (DCPR6E)	3	NGK
29	11115-73G01-001	GUIDE, VALVE (OS)	4	OPT

FIG.111T

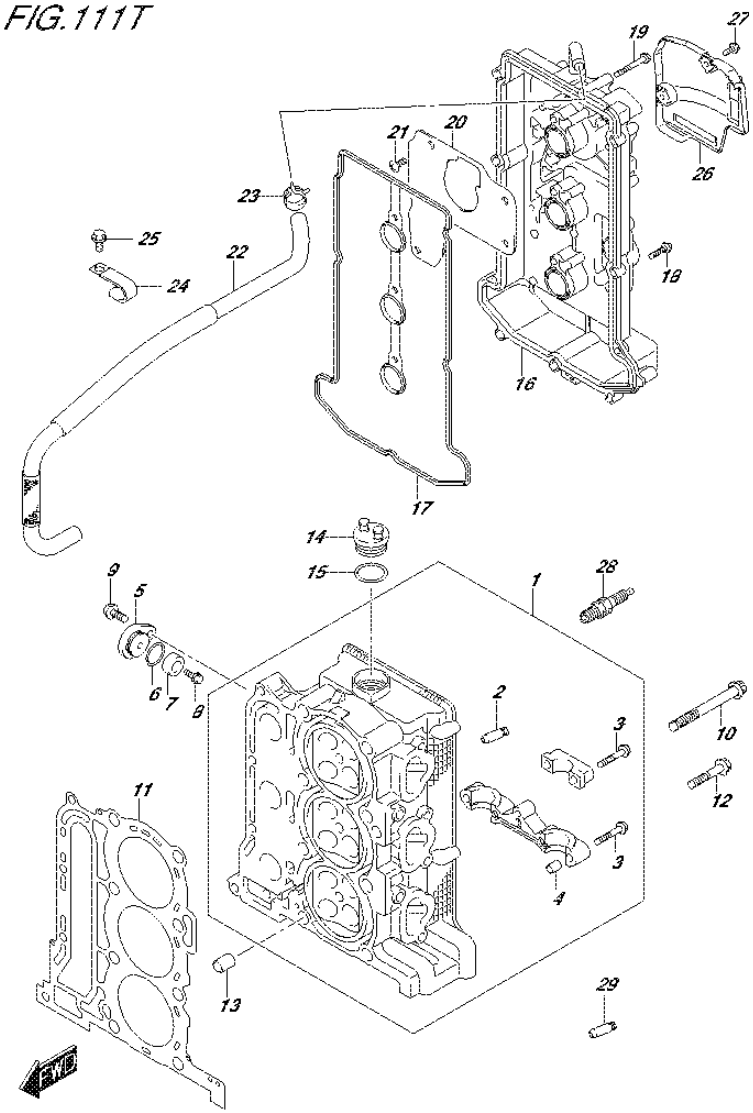

FIG.111T (1-C-4) CYLINDER HEAD (DF60AVTH E01)

REF NO.	PART NO.	DESCRIPTION	Q'TY	REMARKS
1	11100-88L00	HEAD ASSY, CYLINDER	1	
2	11115-73G01-001	.GUIDE, VALVE	12	
3	09103-06266	.BOLT (6X40)	17	
4	09206-08001	.PIN (8X11)	14	
5	11261-93J00	COVER, PROTECTION ANODE	2	
6	09280-22019	O RING (D:1.9,ID:21.8)	2	
7-1	55321-87J00	ANODE, PROTECTION	2	
7-2	55321-87J10	ANODE (MAGNESIUM)	1	OPT
8	09103-06281	BOLT (6X14)	2	
9	01550-08207	BOLT	2	
10	11119-87J00	BOLT, CYLINDER HEAD (10X95)	8	
11	11141-88L00	GASKET, CYLINDER HEAD	1	
12	01550-08457	BOLT	4	
13	04211-13189	PIN	2	
14	11382-99E00	CAP, OIL FILLER	1	
15	09280-26006	O RING (D:3.1,ID:26.4)	1	
16	11170-88L10	COVER, CYLINDER HEAD	1	
17	11189-88L00	GASKET, CYLINDER HEAD COVER	1	
18	01547-06257	BOLT	9	
19	01547-06457	BOLT	3	
20	11173-88L00	PLATE, BREATHER	1	
21	02142-0612A	SCREW	4	
22	11174-88L00	HOSE, BREATHER	1	
23	09401-15414	CLIP	1	
24	09403-17303	CLAMP	2	
25	01550-06127	BOLT	2	
26	11194-88L10	GUARD, FUEL HOSE	1	
27	01550-06167	BOLT	2	
28	09482-00446	SPARK PLUG (DCPR6E)	3	NGK
29	11115-73G01-001	GUIDE, VALVE (OS)	4	OPT

FIG.111U

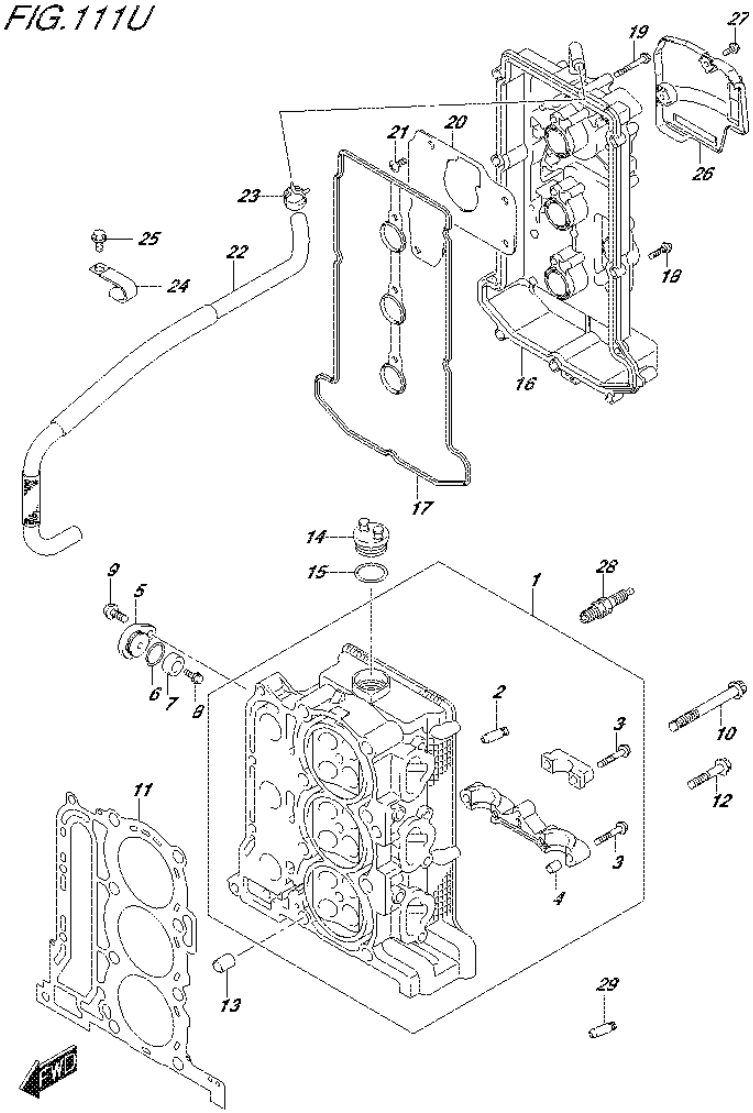

FIG.111U (1-C-5) CYLINDER HEAD (DF60AVTH E40)

REF NO.	PART NO.	DESCRIPTION	Q'TY	REMARKS
1	11100-88L00	HEAD ASSY, CYLINDER	1	
2	11115-73G01-001	.GUIDE, VALVE	12	
3	09103-06266	.BOLT (6X40)	17	
4	09206-08001	.PIN (8X11)	14	
5	11261-93J00	COVER, PROTECTION ANODE	2	
6	09280-22019	O RING (D:1.9,ID:21.8)	2	
7-1	55321-87J00	ANODE, PROTECTION	2	
7-2	55321-87J10	ANODE (MAGNESIUM)	1	OPT
8	09103-06281	BOLT (6X14)	2	
9	01550-08207	BOLT	2	
10	11119-87J00	BOLT, CYLINDER HEAD (10X95)	8	
11	11141-88L00	GASKET, CYLINDER HEAD	1	
12	01550-08457	BOLT	4	
13	04211-13189	PIN	2	
14	11382-99E00	CAP, OIL FILLER	1	
15	09280-26006	O RING (D:3.1,ID:26.4)	1	
16	11170-88L10	COVER, CYLINDER HEAD	1	
17	11189-88L00	GASKET, CYLINDER HEAD COVER	1	
18	01547-06257	BOLT	9	
19	01547-06457	BOLT	3	
20	11173-88L00	PLATE, BREATHER	1	
21	02142-0612A	SCREW	4	
22	11174-88L00	HOSE, BREATHER	1	
23	09401-15414	CLIP	1	
24	09403-17303	CLAMP	2	
25	01550-06127	BOLT	2	
26	11194-88L10	GUARD, FUEL HOSE	1	
27	01550-06167	BOLT	2	
28	09482-00446	SPARK PLUG (DCPR6E)	3	NGK
29	11115-73G01-001	GUIDE, VALVE (OS)	4	OPT

FIG.113A

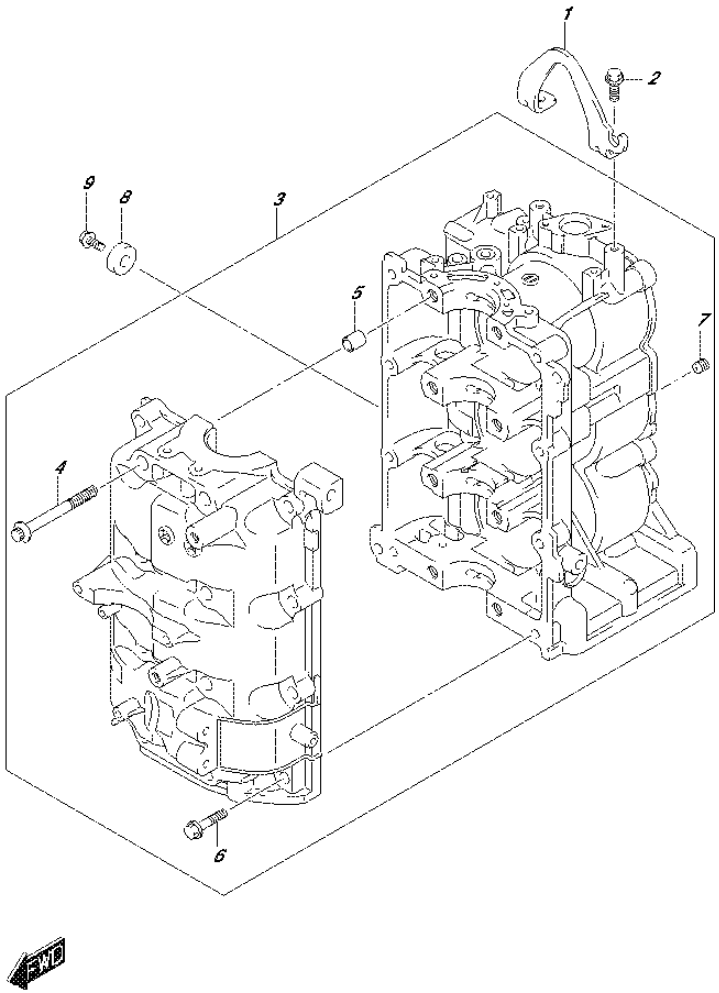

FIG.113A (1-C-6) CYLINDER BLOCK

REF NO.	PART NO.	DESCRIPTION	Q'TY	REMARKS
1	11291-88L00	HOOK, ENGINE	1	
2	01550-08207	BOLT	2	
3	11301-88L10	BLOCK ASSY, CYLINDER	1	
4	11117-89J20	.BOLT, CRANKCASE INSIDE	8	
5	09206-13019	.PIN (10.4X13X16)	4	
6	01550-08407	.BOLT	8	
7	11112-88L00	.PLUG, OIL VENTURI	1	
8	55321-87J00	ANODE, PROTECTION	1	
9	09103-06281	BOLT (6X14)	1	

FIG.116A

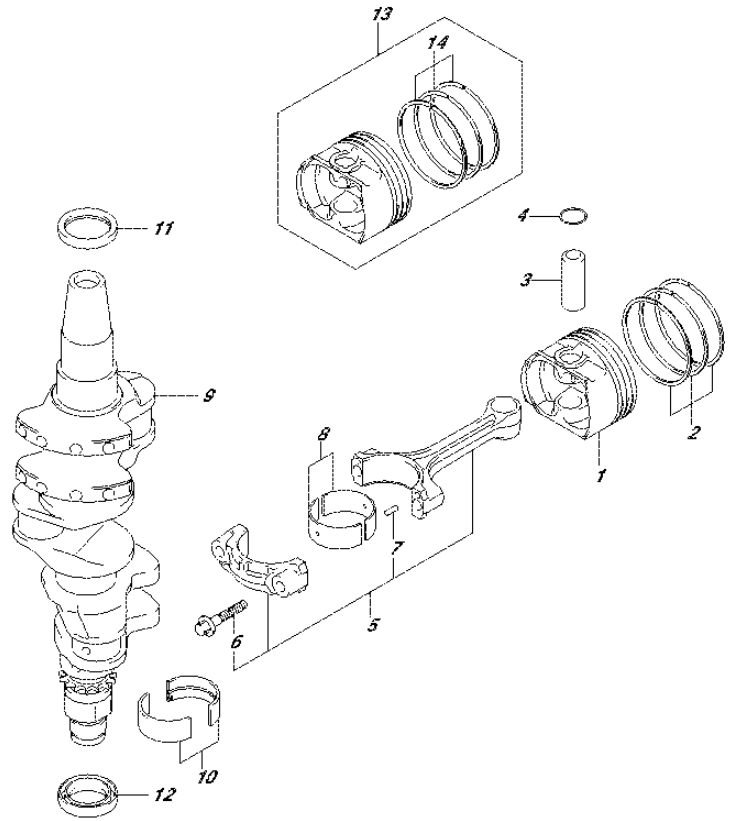

FIG.116A (1-C-7) CRANKSHAFT

REF NO.	PART NO.	DESCRIPTION	Q'TY	REMARKS
1	12111-88L00	PISTON	3	
2	12140-88L00	RING SET, PISTON	3	
3	12151-54A50	PIN, PISTON	3	
4	09381-18002	SNAP RING	6	
5	12160-88L01	CONNROD ASSY	3	
6	12163-69J00	.BOLT, CONNROD	6	
7	04221-04089	.PIN	6	
8-1	12100-51810-0A0	BEARING SET, CONNROD (GREEN)	3	
8-2	12100-51810-0B0	BEARING SET, CONNROD (BLACK)	3	
8-3	12100-51810-0C0	BEARING SET, CONNROD (NON)	3	
8-4	12100-51810-0D0	BEARING SET, CONNROD (YELLOW)	3	
8-5	12100-51810-0E0	BEARING SET, CONNROD (BLUE)	3	
9	12220-88L00	CRANKSHAFT	1	
10-1	12340-75FA0-0A0	BEARING SET, CRANKSHAFT	4	GREEN
10-2	12340-75FA0-0B0	BEARING SET, CRANKSHAFT	4	BLACK
10-3	12340-75F00-0C0	BEARING SET, CRANKSHAFT	4	NON
10-4	12340-75F00-0D0	BEARING SET, CRANKSHAFT	4	YELLOW
10-5	12340-75F00-0E0	BEARING SET, CRANKSHAFT	4	BLUE
11	09283-37005	OIL SEAL (37X49X6)	1	
12	12281-87J00	SEAL, LOWER OIL (29.3X44X7)	1	
13	12100-88L00-050	PISTON SET (OS:0.50)	3	OPT
14	12140-88L00-050	.RING SET, PISTON (OS:0.50)	3	OPT

FIG.119A

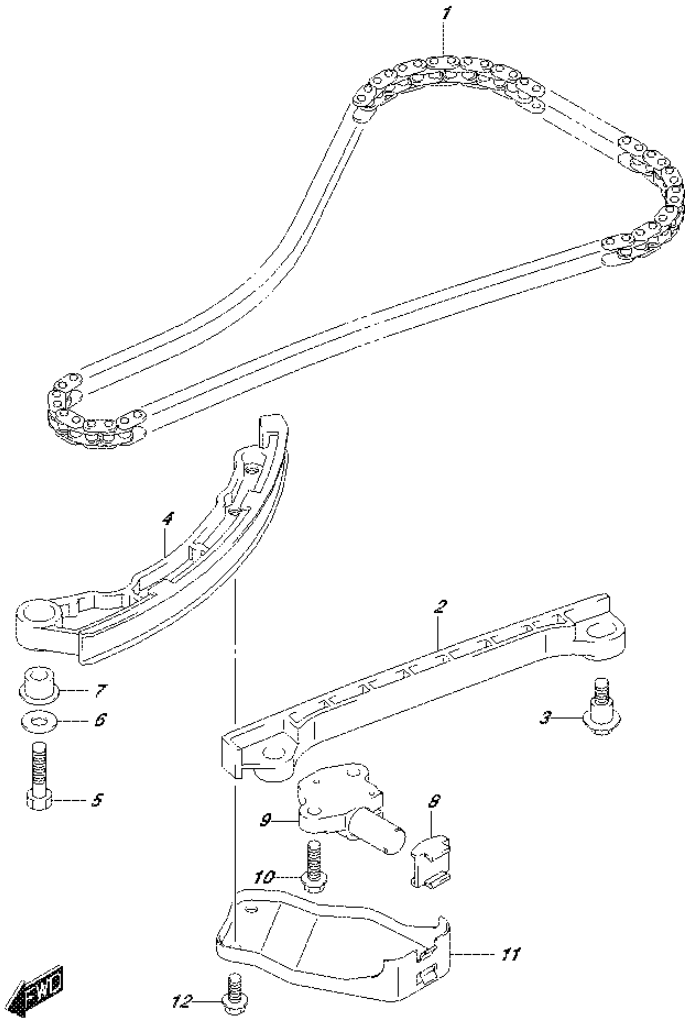

FIG.119A (1-C-8) TIMING CHAIN

REF NO.	PART NO.	DESCRIPTION	Q'TY	REMARKS
1	12761-88L00	CHAIN, TIMING	1	
2	12771-87J00	GUIDE, TIMING CHAIN NO.1	1	
3	12776-85FA0	BOLT, TIMING CHAIN GUIDE	2	
4	12811-88L00	TENSIONER, TIMING CHAIN	1	
5	09100-08260	BOLT (8X30)	1	
6	09160-08123	WASHER (8.5X20X1.2)	1	
7	12812-73G10	SPACER, TIMING CHAIN TENSIONER	1	
8	12813-73G00	PAD, TIMING CHAIN TENSIONER	1	
9	12831-90J02	ADJUSTER ASSY, TENSIONER	1	
10	01550-0620A	BOLT	2	
11	12821-88L00	LINK, TIMING CHAIN TENSIONER	1	
12	01550-0612A	BOLT	2	

FIG.121A

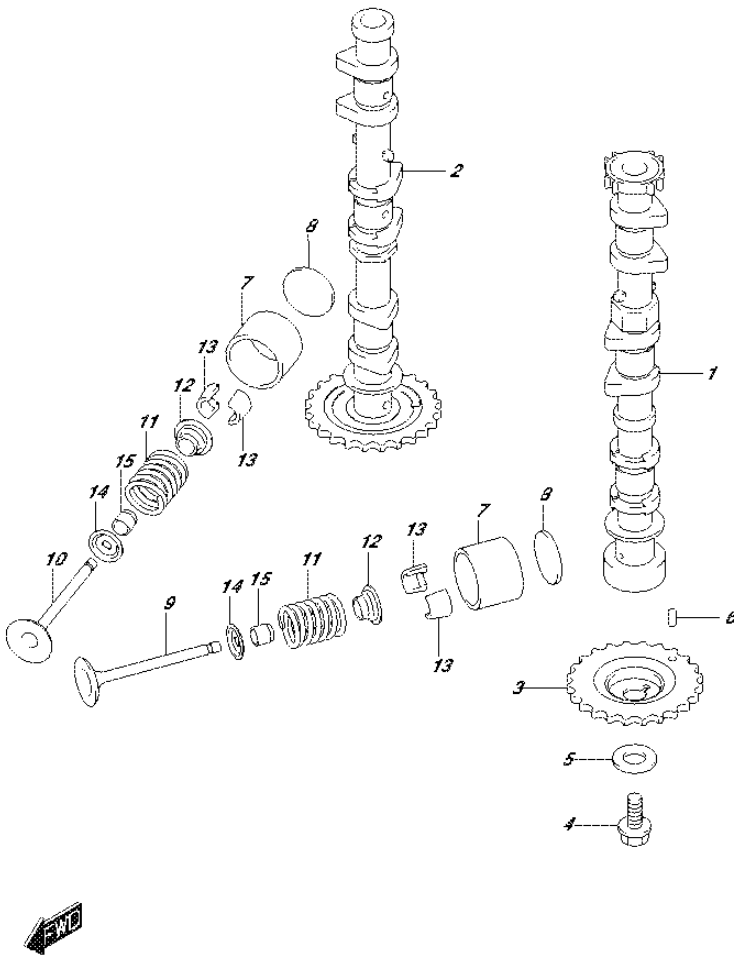

FIG.121A (1-C-9) CAMSHAFT

REF NO.	PART NO.	DESCRIPTION	Q'TY	REMARKS
1	12710-88L00	CAMSHAFT, INTAKE	1	
2	12720-88L00	CAMSHAFT, EXHAUST (NT:34)	1	
3	12741-88L00	SPROCKET, CAMSHAFT TIMING (NT:34)	1	
4	09103-10189	BOLT (10X23)	1	
5	09160-10093	WASHER (10.5X24X2.3)	1	
6	04221-05109	PIN	1	
7	12891-73G01	TAPPET	12	
8-1	12892-73G01-218	SHIM, TAPPET (T:2.18)	AR	OPT
8-2	12892-73G01-220	SHIM, TAPPET (T:2.20)	AR	OPT
8-3	12892-73G01-222	SHIM, TAPPET (T:2.22)	AR	OPT
8-4	12892-73G01-224	SHIM, TAPPET (T:2.24)	AR	OPT
8-5	12892-73G01-226	SHIM, TAPPET (T:2.26)	AR	OPT
8-6	12892-73G01-228	SHIM, TAPPET (T:2.28)	AR	OPT
8-7	12892-73G01-230	SHIM, TAPPET (T:2.30)	AR	
8-8	12892-73G01-232	SHIM, TAPPET (T:2.32)	AR	
8-9	12892-73G01-234	SHIM, TAPPET (T:2.34)	AR	
8-10	12892-73G01-236	SHIM, TAPPET (T:2.36)	AR	
8-11	12892-73G01-238	SHIM, TAPPET (T:2.38)	AR	
8-12	12892-73G01-240	SHIM, TAPPET (T:2.40)	AR	
8-13	12892-73G01-242	SHIM, TAPPET (T:2.42)	AR	
8-14	12892-73G01-244	SHIM, TAPPET (T:2.44)	AR	
8-15	12892-73G01-246	SHIM, TAPPET (T:2.46)	AR	
8-16	12892-73G01-248	SHIM, TAPPET (T:2.48)	AR	
8-17	12892-73G01-250	SHIM, TAPPET (T:2.50)	AR	
8-18	12892-73G01-252	SHIM, TAPPET (T:2.52)	AR	
8-19	12892-73G01-254	SHIM, TAPPET (T:2.54)	AR	
8-20	12892-73G01-256	SHIM, TAPPET (T:2.56)	AR	
8-21	12892-73G01-258	SHIM, TAPPET (T:2.58)	AR	
8-22	12892-73G01-260	SHIM, TAPPET (T:2.60)	AR	
8-23	12892-73G01-262	SHIM, TAPPET (T:2.62)	AR	
8-24	12892-73G01-264	SHIM, TAPPET (T:2.64)	AR	
8-25	12892-73G01-266	SHIM, TAPPET (T:2.66)	AR	
8-26	12892-73G01-268	SHIM, TAPPET (T:2.68)	AR	

FIG.121A

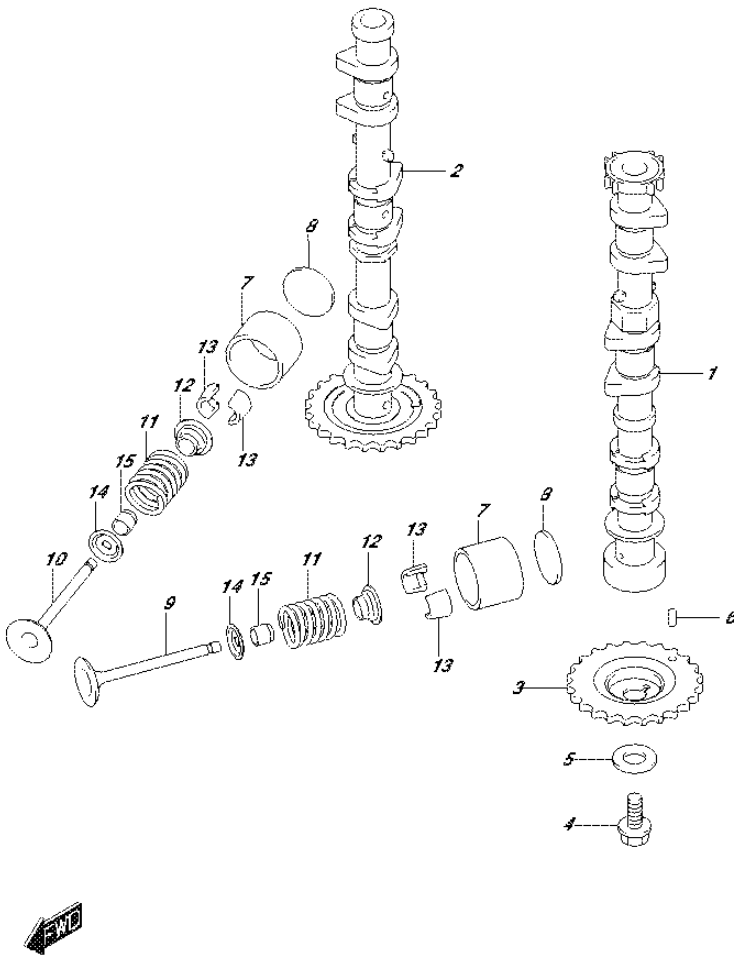

FIG.121A (1-C-10) CAMSHAFT

REF NO.	PART NO.	DESCRIPTION	Q'TY	REMARKS
8-27	12892-73G01-270	SHIM, TAPPET (T:2.70)	AR	
8-28	12892-73G01-272	SHIM, TAPPET (T:2.72)	AR	
8-29	12892-73G01-274	SHIM, TAPPET (T:2.74)	AR	
8-30	12892-73G01-276	SHIM, TAPPET (T:2.76)	AR	
8-31	12892-73G01-278	SHIM, TAPPET (T:2.78)	AR	
8-32	12892-73G01-280	SHIM, TAPPET (T:2.80)	AR	
8-33	12892-73G01-282	SHIM, TAPPET (T:2.82)	AR	OPT
8-34	12892-73G01-284	SHIM, TAPPET (T:2.84)	AR	OPT
8-35	12892-73G01-286	SHIM, TAPPET (T:2.86)	AR	OPT
8-36	12892-73G01-288	SHIM, TAPPET (T:2.88)	AR	OPT
8-37	12892-73G01-290	SHIM, TAPPET (T:2.90)	AR	OPT
8-38	12892-73G01-292	SHIM, TAPPET (T:2.92)	AR	OPT
8-39	12892-73G01-294	SHIM, TAPPET (T:2.94)	AR	OPT
8-40	12892-73G01-296	SHIM, TAPPET (T:2.96)	AR	OPT
8-41	12892-73G01-298	SHIM, TAPPET (T:2.98)	AR	OPT
8-42	12892-73G01-300	SHIM, TAPPET (T:3.00)	AR	OPT
9	12911-88L00	VALVE, INTAKE	6	
10	12915-73G20	VALVE, EXHAUST	6	
11	12921-87J10	SPRING, VALVE	12	
12	12931-78G00	RETAINER, VALVE SPRING	12	
13	12932-24400	COTTER, VALVE	24	
14	12933-51E00	SEAT, VALVE SPRING	12	
15	09289-05012	OIL SEAL (5.5X11.5X9.3)	12	

FIG.124A (1-C-11) INTAKE MANIFOLD/SILENCER/EXHAUST COVER (DF40A E0

REF NO.	PART NO.	DESCRIPTION	Q'TY	REMARKS
1	13110-88L00	MANIFOLD, INTAKE	1	
2	13119-88L00	.GASKET, INTAKE MANIFOLD	3	
3	13125-88L00	.GASKET, THROTTLE BODY	1	
4	01421-08607	STUD BOLT	2	
5	01550-08307	BOLT	6	
6	01550-08407	BOLT	1	
7	08316-10087	NUT	2	
8	18137-88L01	VALVE, IAC	1	
9	02112-34167	SCREW	3	
10	13810-88L00	SILENCER	1	
11	13820-88L00	HOLDER, SILENCER	1	
12	01550-06127	BOLT	1	
13	14141-88L00	COVER, EXHAUST	1	
14	14151-88L00	GASKET, EXHAUST COVER	1	
15	01550-06207	BOLT	8	

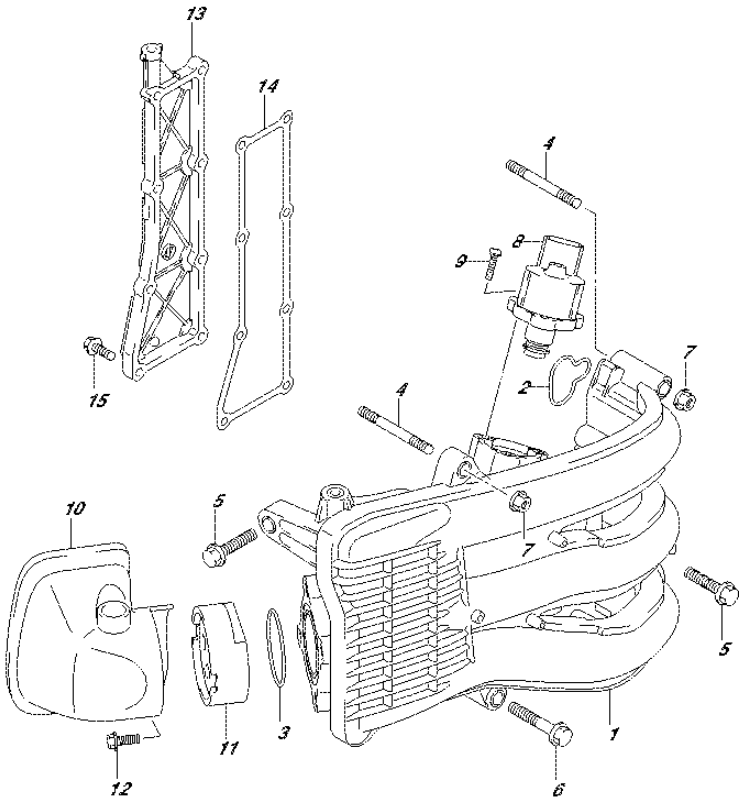

FIG.124B (1-C-12) INTAKE MANIFOLD/SILENCER/EXHAUST COVER (DF40AQH

REF NO.	PART NO.	DESCRIPTION	Q'TY	REMARKS
1	13110-88L00	MANIFOLD, INTAKE	1	
2	13119-88L00	.GASKET, INTAKE MANIFOLD	3	
3	13125-88L00	.GASKET, THROTTLE BODY	1	
4	01421-08607	STUD BOLT	2	
5	01550-08307	BOLT	6	
6	01550-08407	BOLT	1	
7	08316-10087	NUT	2	
8	18137-88L01	VALVE, IAC	1	
9	02112-34167	SCREW	3	
10	13810-88L00	SILENCER	1	
11	13820-88L00	HOLDER, SILENCER	1	
12	01550-06127	BOLT	1	
13	14141-88L00	COVER, EXHAUST	1	
14	14151-88L00	GASKET, EXHAUST COVER	1	
15	01550-06207	BOLT	8	

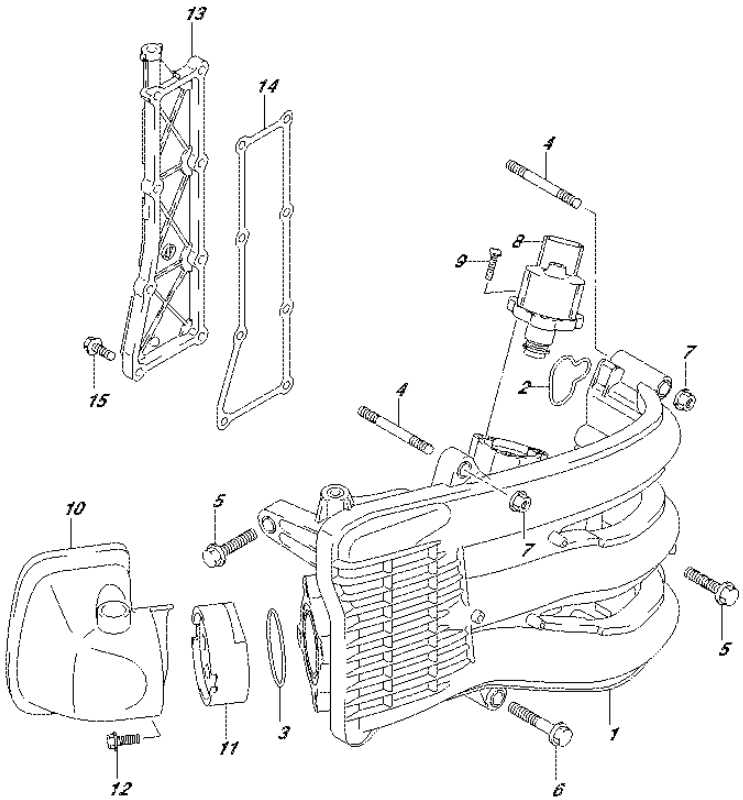

FIG.124C (1-C-13) INTAKE MANIFOLD/SILENCER/EXHAUST COVER (DF40ATH

REF NO.	PART NO.	DESCRIPTION	Q'TY	REMARKS
1	13110-88L00	MANIFOLD, INTAKE	1	
2	13119-88L00	.GASKET, INTAKE MANIFOLD	3	
3	13125-88L00	.GASKET, THROTTLE BODY	1	
4	01421-08607	STUD BOLT	2	
5	01550-08307	BOLT	6	
6	01550-08407	BOLT	1	
7	08316-10087	NUT	2	
8	18137-88L01	VALVE, IAC	1	
9	02112-34167	SCREW	3	
10	13810-88L00	SILENCER	1	
11	13820-88L00	HOLDER, SILENCER	1	
12	01550-06127	BOLT	1	
13	14141-88L00	COVER, EXHAUST	1	
14	14151-88L00	GASKET, EXHAUST COVER	1	
15	01550-06207	BOLT	8	

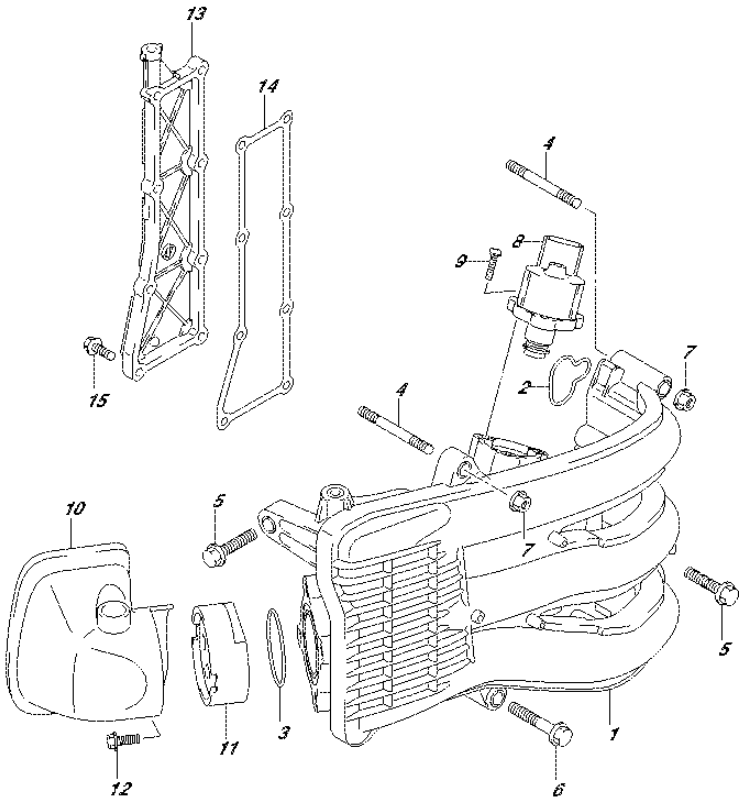

FIG.124D (1-C-14) INTAKE MANIFOLD/SILENCER/EXHAUST COVER (DF40AST

REF NO.	PART NO.	DESCRIPTION	Q'TY	REMARKS
1	13110-88L00	MANIFOLD, INTAKE	1	
2	13119-88L00	.GASKET, INTAKE MANIFOLD	3	
3	13125-88L00	.GASKET, THROTTLE BODY	1	
4	01421-08607	STUD BOLT	2	
5	01550-08307	BOLT	6	
6	01550-08407	BOLT	1	
7	08316-10087	NUT	2	
8	18137-88L01	VALVE, IAC	1	
9	02112-34167	SCREW	3	
10	13810-88L00	SILENCER	1	
11	13813-88L00	HOLDER, SILENCER	1	
12	01550-06127	BOLT	1	
13	14141-88L00	COVER, EXHAUST	1	
14	14151-88L00	GASKET, EXHAUST COVER	1	
15	01550-06207	BOLT	8	

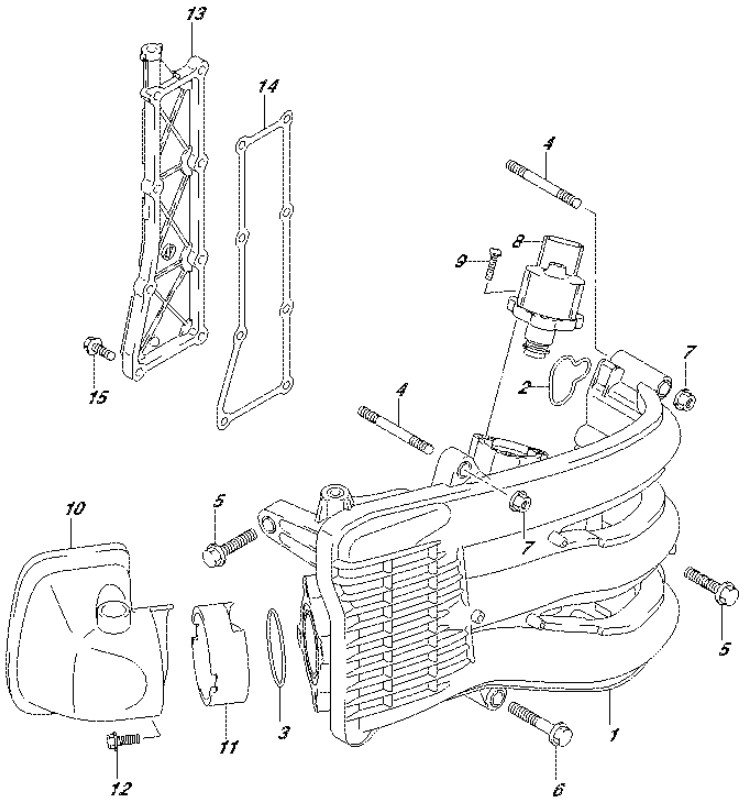

FIG.124E (1-C-15) INTAKE MANIFOLD/SILENCER/EXHAUST COVER (DF50A E0

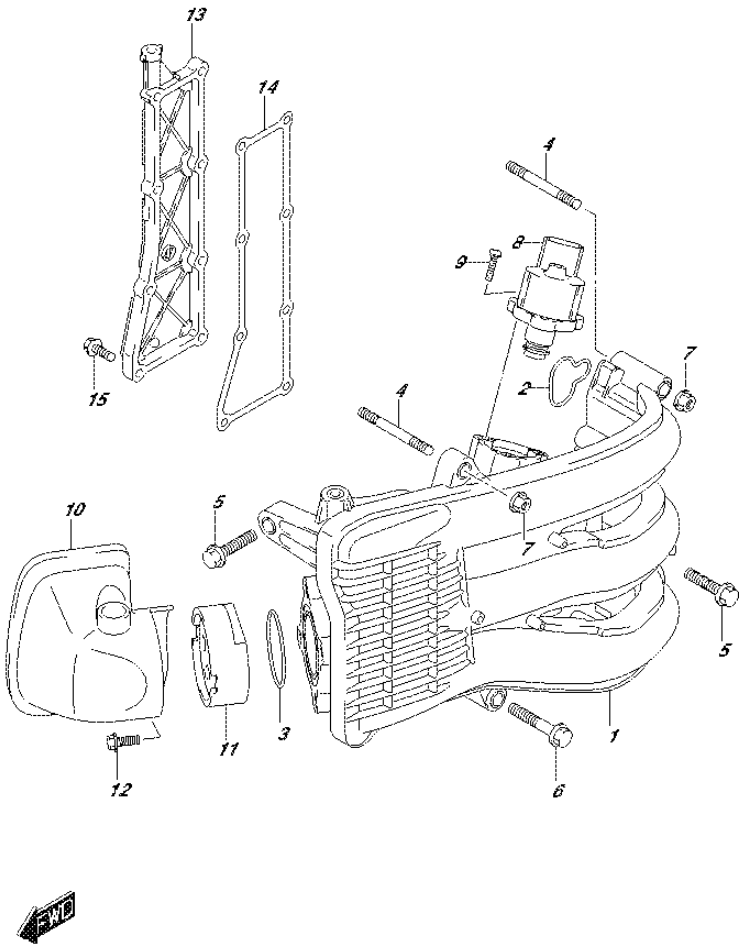

REF NO.	PART NO.	DESCRIPTION	Q'TY	REMARKS
1	13110-88L00	MANIFOLD, INTAKE	1	
2	13119-88L00	.GASKET, INTAKE MANIFOLD	3	
3	13125-88L00	.GASKET, THROTTLE BODY	1	
4	01421-08607	STUD BOLT	2	
5	01550-08307	BOLT	6	
6	01550-08407	BOLT	1	
7	08316-10087	NUT	2	
8	18137-88L01	VALVE, IAC	1	
9	02112-34167	SCREW	3	
10	13810-88L00	SILENCER	1	
11	13820-88L10	HOLDER, SILENCER	1	
12	01550-06127	BOLT	1	
13	14141-88L00	COVER, EXHAUST	1	
14	14151-88L00	GASKET, EXHAUST COVER	1	
15	01550-06207	BOLT	8	

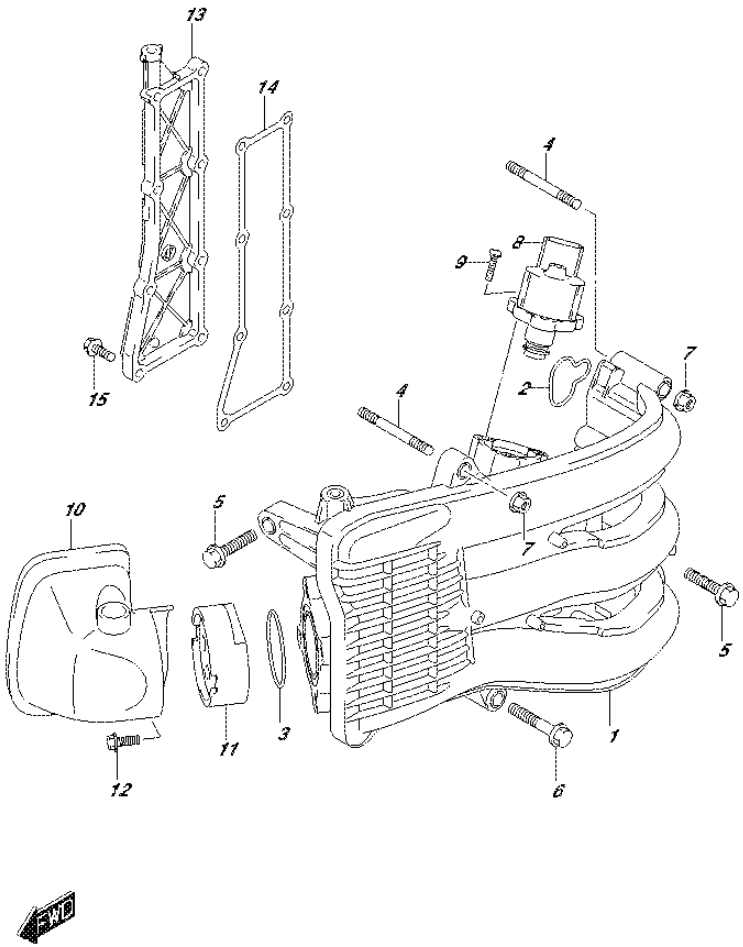

FIG.124F (1-D-2) INTAKE MANIFOLD/SILENCER/EXHAUST COVER (DF50ATH E

REF NO.	PART NO.	DESCRIPTION	Q'TY	REMARKS
1	13110-88L00	MANIFOLD, INTAKE	1	
2	13119-88L00	.GASKET, INTAKE MANIFOLD	3	
3	13125-88L00	.GASKET, THROTTLE BODY	1	
4	01421-08607	STUD BOLT	2	
5	01550-08307	BOLT	6	
6	01550-08407	BOLT	1	
7	08316-10087	NUT	2	
8	18137-88L01	VALVE, IAC	1	
9	02112-34167	SCREW	3	
10	13810-88L00	SILENCER	1	
11	13820-88L10	HOLDER, SILENCER	1	
12	01550-06127	BOLT	1	
13	14141-88L00	COVER, EXHAUST	1	
14	14151-88L00	GASKET, EXHAUST COVER	1	
15	01550-06207	BOLT	8	

FIG.124G (1-D-3) INTAKE MANIFOLD/SILENCER/EXHAUST COVER (DF60A E01

REF NO.	PART NO.	DESCRIPTION	Q'TY	REMARKS
1	13110-88L00	MANIFOLD, INTAKE	1	
2	13119-88L00	.GASKET, INTAKE MANIFOLD	3	
3	13125-88L00	.GASKET, THROTTLE BODY	1	
4	01421-08607	STUD BOLT	2	
5	01550-08307	BOLT	6	
6	01550-08407	BOLT	1	
7	08316-10087	NUT	2	
8	18137-88L01	VALVE, IAC	1	
9	02112-34167	SCREW	3	
10	13810-88L00	SILENCER	1	
11	13813-88L00	HOLDER, SILENCER	1	
12	01550-06127	BOLT	1	
13	14141-88L00	COVER, EXHAUST	1	
14	14151-88L00	GASKET, EXHAUST COVER	1	
15	01550-06207	BOLT	8	

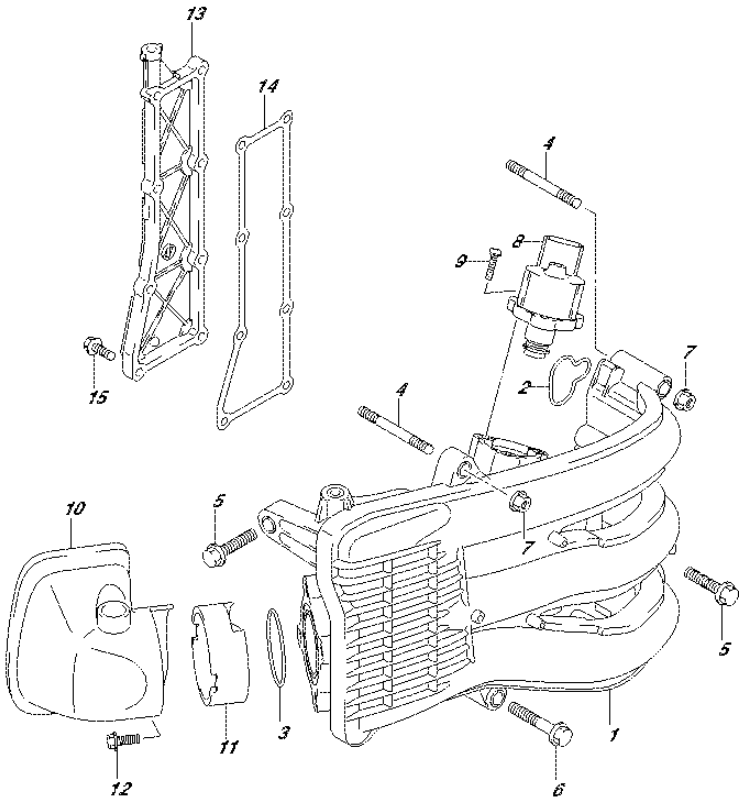

FIG.124H (1-D-4) INTAKE MANIFOLD/SILENCER/EXHAUST COVER (DF60A E40

REF NO.	PART NO.	DESCRIPTION	Q'TY	REMARKS
1	13110-88L00	MANIFOLD, INTAKE	1	
2	13119-88L00	.GASKET, INTAKE MANIFOLD	3	
3	13125-88L00	.GASKET, THROTTLE BODY	1	
4	01421-08607	STUD BOLT	2	
5	01550-08307	BOLT	6	
6	01550-08407	BOLT	1	
7	08316-10087	NUT	2	
8	18137-88L01	VALVE, IAC	1	
9	02112-34167	SCREW	3	
10	13810-88L00	SILENCER	1	
11	13813-88L00	HOLDER, SILENCER	1	
12	01550-06127	BOLT	1	
13	14141-88L00	COVER, EXHAUST	1	
14	14151-88L00	GASKET, EXHAUST COVER	1	
15	01550-06207	BOLT	8	

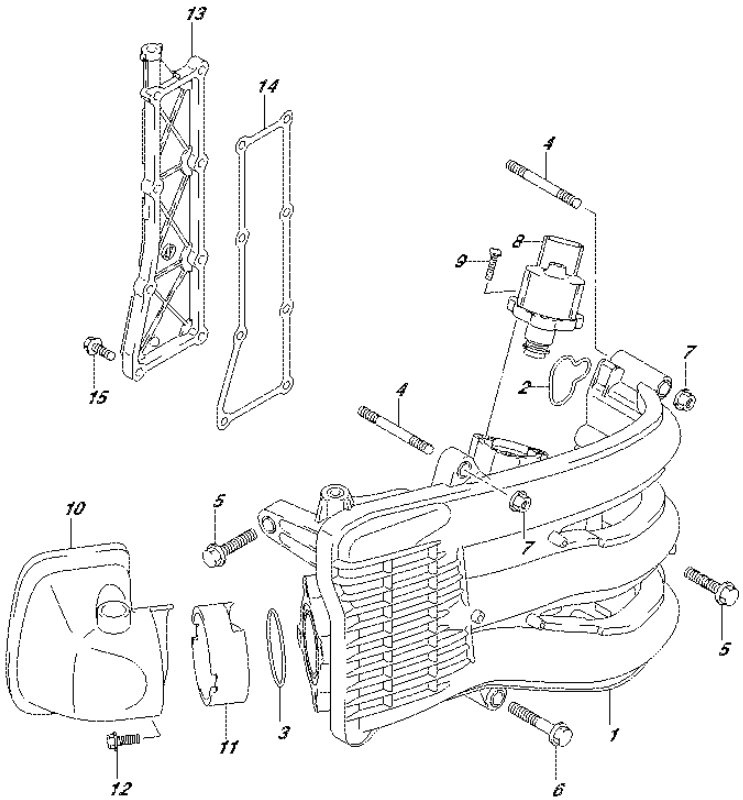

FIG.124J (1-D-5) INTAKE MANIFOLD/SILENCER/EXHAUST COVER (DF60AQH E

REF NO.	PART NO.	DESCRIPTION	Q'TY	REMARKS
1	13110-88L00	MANIFOLD, INTAKE	1	
2	13119-88L00	.GASKET, INTAKE MANIFOLD	3	
3	13125-88L00	.GASKET, THROTTLE BODY	1	
4	01421-08607	STUD BOLT	2	
5	01550-08307	BOLT	6	
6	01550-08407	BOLT	1	
7	08316-10087	NUT	2	
8	18137-88L01	VALVE, IAC	1	
9	02112-34167	SCREW	3	
10	13810-88L00	SILENCER	1	
11	13813-88L00	HOLDER, SILENCER	1	
12	01550-06127	BOLT	1	
13	14141-88L00	COVER, EXHAUST	1	
14	14151-88L00	GASKET, EXHAUST COVER	1	
15	01550-06207	BOLT	8	

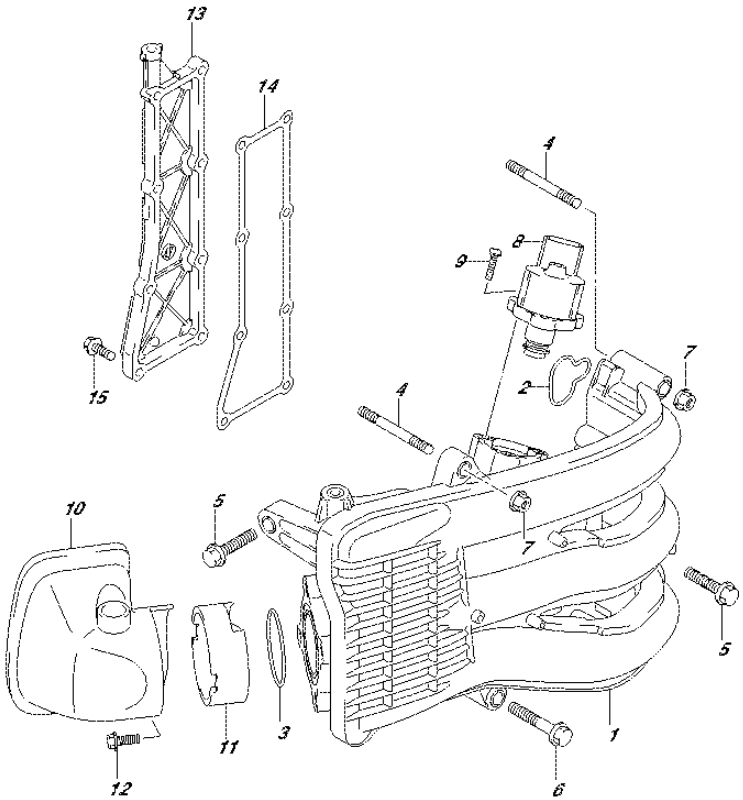

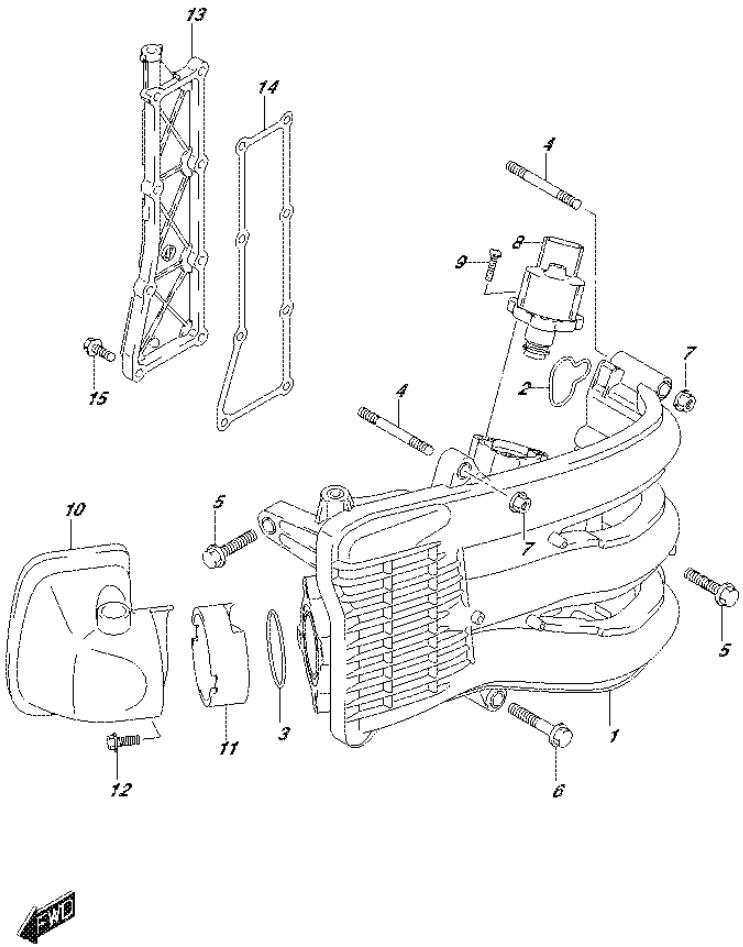

FIG.124K (1-D-6) INTAKE MANIFOLD/SILENCER/EXHAUST COVER (DF60AQH I

REF NO.	PART NO.	DESCRIPTION	Q'TY	REMARKS
1	13110-88L00	MANIFOLD, INTAKE	1	
2	13119-88L00	.GASKET, INTAKE MANIFOLD	3	
3	13125-88L00	.GASKET, THROTTLE BODY	1	
4	01421-08607	STUD BOLT	2	
5	01550-08307	BOLT	6	
6	01550-08407	BOLT	1	
7	08316-10087	NUT	2	
8	18137-88L01	VALVE, IAC	1	
9	02112-34167	SCREW	3	
10	13810-88L00	SILENCER	1	
11	13813-88L00	HOLDER, SILENCER	1	
12	01550-06127	BOLT	1	
13	14141-88L00	COVER, EXHAUST	1	
14	14151-88L00	GASKET, EXHAUST COVER	1	
15	01550-06207	BOLT	8	

FIG.124L (1-D-7) INTAKE MANIFOLD/SILENCER/EXHAUST COVER (DF60ATH E

REF NO.	PART NO.	DESCRIPTION	Q'TY	REMARKS
1	13110-88L00	MANIFOLD, INTAKE	1	
2	13119-88L00	.GASKET, INTAKE MANIFOLD	3	
3	13125-88L00	.GASKET, THROTTLE BODY	1	
4	01421-08607	STUD BOLT	2	
5	01550-08307	BOLT	6	
6	01550-08407	BOLT	1	
7	08316-10087	NUT	2	
8	18137-88L01	VALVE, IAC	1	
9	02112-34167	SCREW	3	
10	13810-88L00	SILENCER	1	
11	13813-88L00	HOLDER, SILENCER	1	
12	01550-06127	BOLT	1	
13	14141-88L00	COVER, EXHAUST	1	
14	14151-88L00	GASKET, EXHAUST COVER	1	
15	01550-06207	BOLT	8	

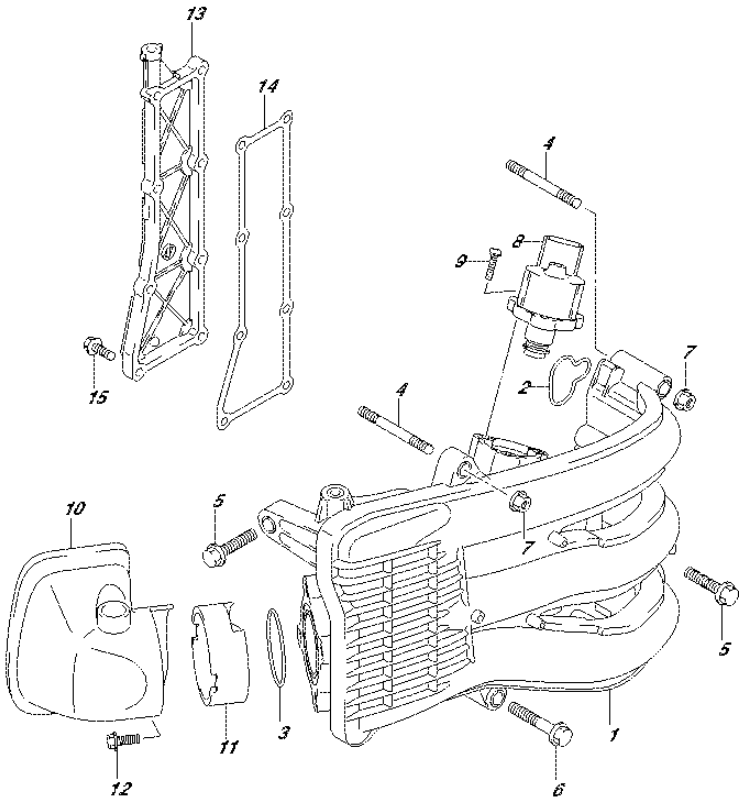

FIG.124M (1-D-8) INTAKE MANIFOLD/SILENCER/EXHAUST COVER (DF60ATH E

REF NO.	PART NO.	DESCRIPTION	Q'TY	REMARKS
1	13110-88L00	MANIFOLD, INTAKE	1	
2	13119-88L00	.GASKET, INTAKE MANIFOLD	3	
3	13125-88L00	.GASKET, THROTTLE BODY	1	
4	01421-08607	STUD BOLT	2	
5	01550-08307	BOLT	6	
6	01550-08407	BOLT	1	
7	08316-10087	NUT	2	
8	18137-88L01	VALVE, IAC	1	
9	02112-34167	SCREW	3	
10	13810-88L00	SILENCER	1	
11	13813-88L00	HOLDER, SILENCER	1	
12	01550-06127	BOLT	1	
13	14141-88L00	COVER, EXHAUST	1	
14	14151-88L00	GASKET, EXHAUST COVER	1	
15	01550-06207	BOLT	8	

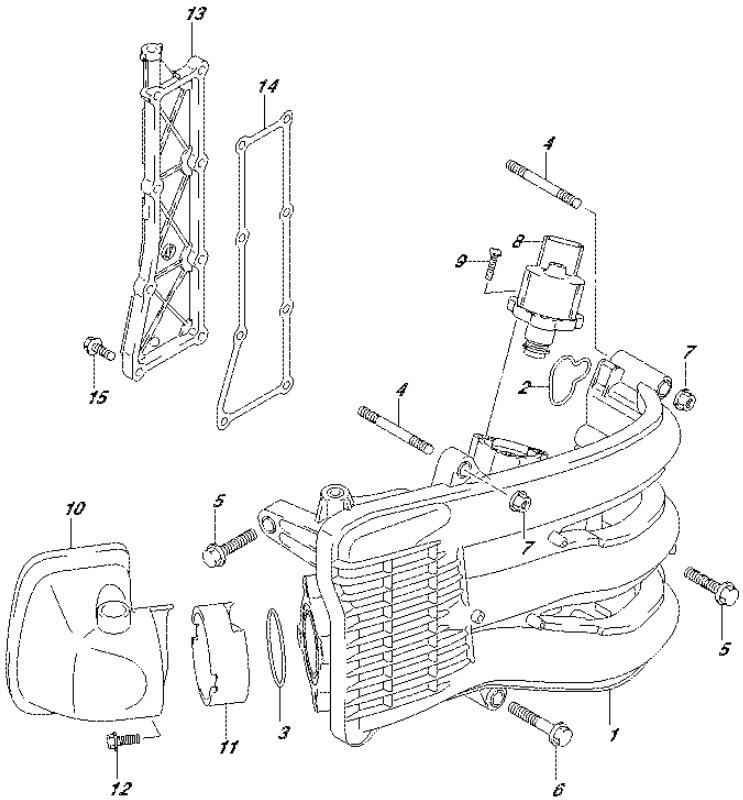

FIG.124N (1-D-9) INTAKE MANIFOLD/SILENCER/EXHAUST COVER (DF50AVT E

REF NO.	PART NO.	DESCRIPTION	Q'TY	REMARKS
1	13110-88L00	MANIFOLD, INTAKE	1	
2	13119-88L00	.GASKET, INTAKE MANIFOLD	3	
3	13125-88L00	.GASKET, THROTTLE BODY	1	
4	01421-08607	STUD BOLT	2	
5	01550-08307	BOLT	6	
6	01550-08407	BOLT	1	
7	08316-10087	NUT	2	
8	18137-88L01	VALVE, IAC	1	
9	02112-34167	SCREW	3	
10	13810-88L00	SILENCER	1	
11	13820-88L10	HOLDER, SILENCER	1	
12	01550-06127	BOLT	1	
13	14141-88L00	COVER, EXHAUST	1	
14	14151-88L00	GASKET, EXHAUST COVER	1	
15	01550-06207	BOLT	8	

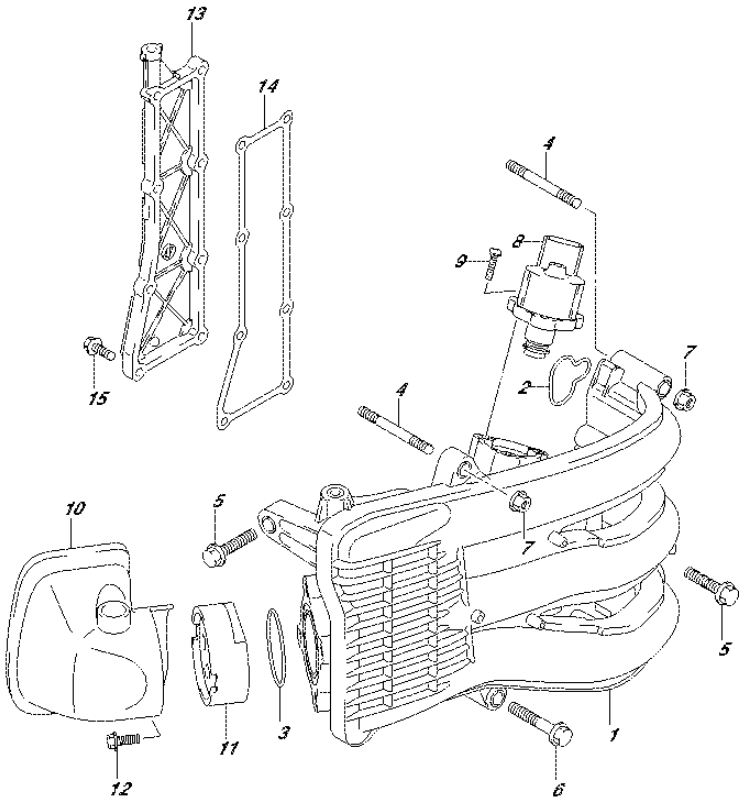

FIG.124P (1-D-10) INTAKE MANIFOLD/SILENCER/EXHAUST COVER (DF50AVTI

REF NO.	PART NO.	DESCRIPTION	Q'TY	REMARKS
1	13110-88L00	MANIFOLD, INTAKE	1	
2	13119-88L00	.GASKET, INTAKE MANIFOLD	3	
3	13125-88L00	.GASKET, THROTTLE BODY	1	
4	01421-08607	STUD BOLT	2	
5	01550-08307	BOLT	6	
6	01550-08407	BOLT	1	
7	08316-10087	NUT	2	
8	18137-88L01	VALVE, IAC	1	
9	02112-34167	SCREW	3	
10	13810-88L00	SILENCER	1	
11	13820-88L10	HOLDER, SILENCER	1	
12	01550-06127	BOLT	1	
13	14141-88L00	COVER, EXHAUST	1	
14	14151-88L00	GASKET, EXHAUST COVER	1	
15	01550-06207	BOLT	8	

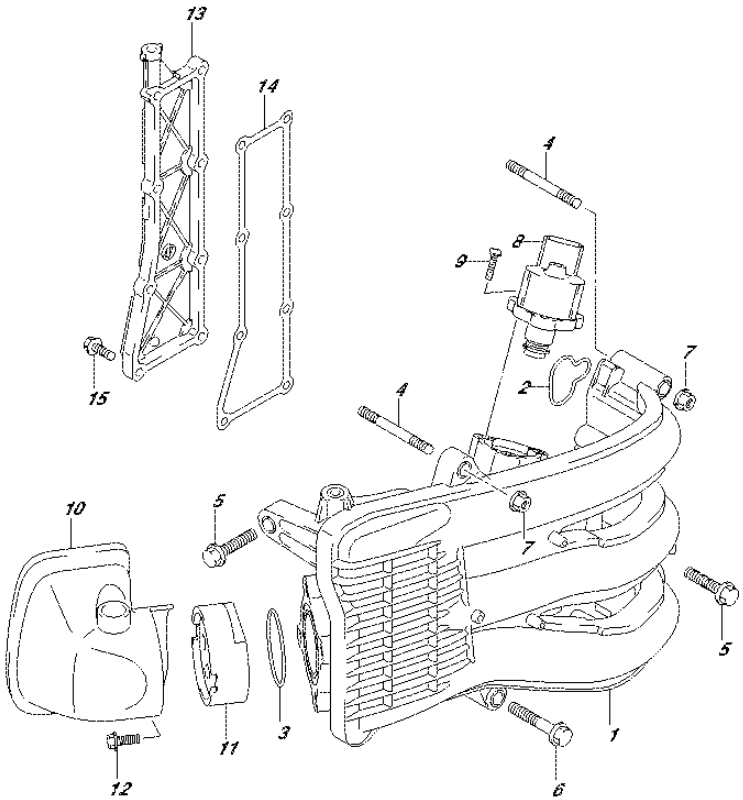

FIG.124R (1-D-11) INTAKE MANIFOLD/SILENCER/EXHAUST COVER (DF60AVT

REF NO.	PART NO.	DESCRIPTION	Q'TY	REMARKS
1	13110-88L00	MANIFOLD, INTAKE	1	
2	13119-88L00	.GASKET, INTAKE MANIFOLD	3	
3	13125-88L00	.GASKET, THROTTLE BODY	1	
4	01421-08607	STUD BOLT	2	
5	01550-08307	BOLT	6	
6	01550-08407	BOLT	1	
7	08316-10087	NUT	2	
8	18137-88L01	VALVE, IAC	1	
9	02112-34167	SCREW	3	
10	13810-88L00	SILENCER	1	
11	13813-88L00	HOLDER, SILENCER	1	
12	01550-06127	BOLT	1	
13	14141-88L00	COVER, EXHAUST	1	
14	14151-88L00	GASKET, EXHAUST COVER	1	
15	01550-06207	BOLT	8	

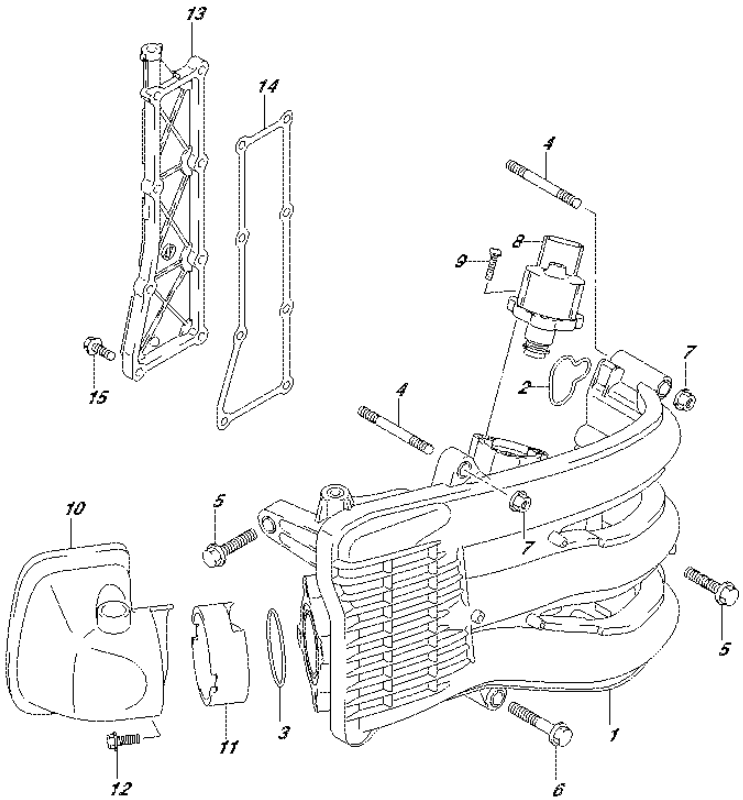

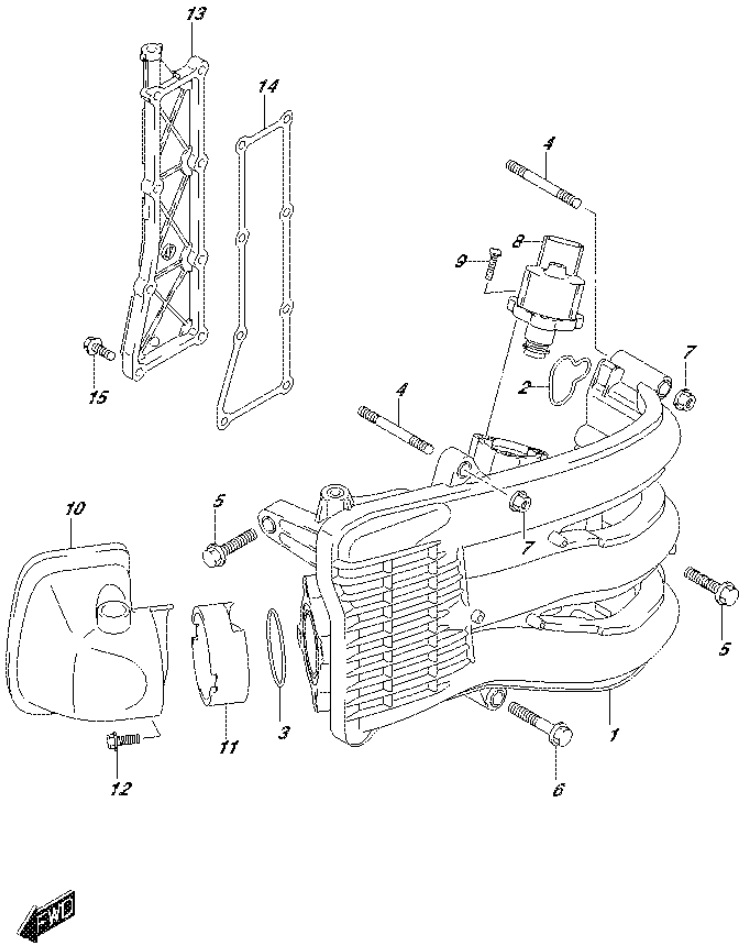

FIG.124S (1-D-12) INTAKE MANIFOLD/SILENCER/EXHAUST COVER (DF60AVT

REF NO.	PART NO.	DESCRIPTION	Q'TY	REMARKS
1	13110-88L00	MANIFOLD, INTAKE	1	
2	13119-88L00	.GASKET, INTAKE MANIFOLD	3	
3	13125-88L00	.GASKET, THROTTLE BODY	1	
4	01421-08607	STUD BOLT	2	
5	01550-08307	BOLT	6	
6	01550-08407	BOLT	1	
7	08316-10087	NUT	2	
8	18137-88L01	VALVE, IAC	1	
9	02112-34167	SCREW	3	
10	13810-88L00	SILENCER	1	
11	13813-88L00	HOLDER, SILENCER	1	
12	01550-06127	BOLT	1	
13	14141-88L00	COVER, EXHAUST	1	
14	14151-88L00	GASKET, EXHAUST COVER	1	
15	01550-06207	BOLT	8	

FIG.124T (1-D-13) INTAKE MANIFOLD/SILENCER/EXHAUST COVER (DF60AVTH

REF NO.	PART NO.	DESCRIPTION	Q'TY	REMARKS
1	13110-88L00	MANIFOLD, INTAKE	1	
2	13119-88L00	.GASKET, INTAKE MANIFOLD	3	
3	13125-88L00	.GASKET, THROTTLE BODY	1	
4	01421-08607	STUD BOLT	2	
5	01550-08307	BOLT	6	
6	01550-08407	BOLT	1	
7	08316-10087	NUT	2	
8	18137-88L01	VALVE, IAC	1	
9	02112-34167	SCREW	3	
10	13810-88L00	SILENCER	1	
11	13813-88L00	HOLDER, SILENCER	1	
12	01550-06127	BOLT	1	
13	14141-88L00	COVER, EXHAUST	1	
14	14151-88L00	GASKET, EXHAUST COVER	1	
15	01550-06207	BOLT	8	

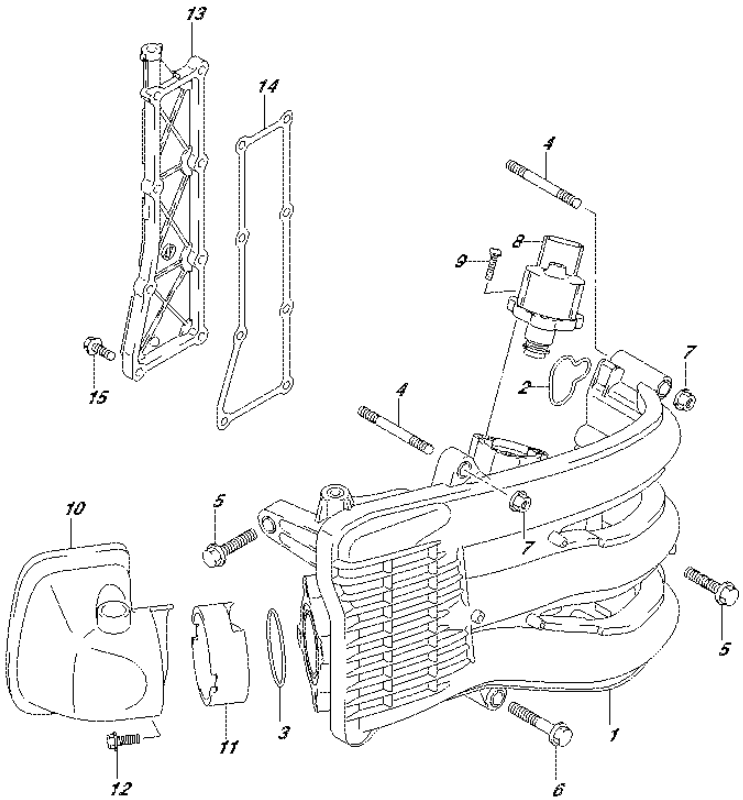

FIG.124U (1-D-14) INTAKE MANIFOLD/SILENCER/EXHAUST COVER (DF60AVT

REF NO.	PART NO.	DESCRIPTION	Q'TY	REMARKS
1	13110-88L00	MANIFOLD, INTAKE	1	
2	13119-88L00	.GASKET, INTAKE MANIFOLD	3	
3	13125-88L00	.GASKET, THROTTLE BODY	1	
4	01421-08607	STUD BOLT	2	
5	01550-08307	BOLT	6	
6	01550-08407	BOLT	1	
7	08316-10087	NUT	2	
8	18137-88L01	VALVE, IAC	1	
9	02112-34167	SCREW	3	
10	13810-88L00	SILENCER	1	
11	13813-88L00	HOLDER, SILENCER	1	
12	01550-06127	BOLT	1	
13	14141-88L00	COVER, EXHAUST	1	
14	14151-88L00	GASKET, EXHAUST COVER	1	
15	01550-06207	BOLT	8	

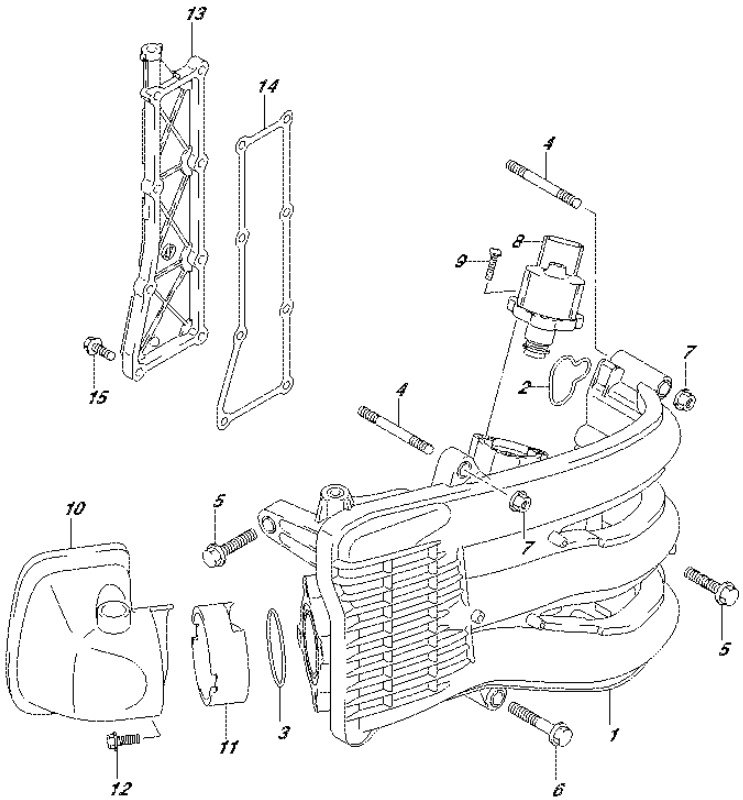

FIG. 136A

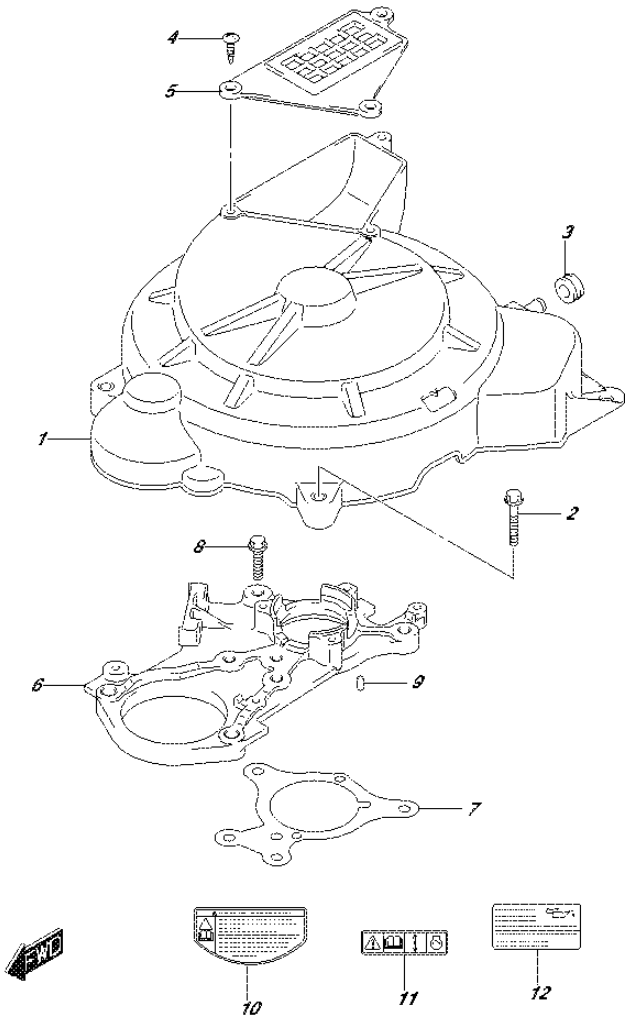

FIG.136A (1-D-15) RING GEAR COVER

REF NO.	PART NO.	DESCRIPTION	Q'TY	REMARKS
1	11510-88L00	COVER, RING GEAR	1	
2	01550-06307	BOLT	3	
3	09320-09501	CUSHION	1	
4	03542-06209	SCREW	3	
5	11514-88L00	PLATE, RING GEAR COVER	1	
6	11411-88L00	HOUSING, UPPER OIL SEAL	1	
7	11413-88L00	GASKET, UPPER OIL SEAL	1	
8	01550-06257	BOLT	5	
9	04221-04089	PIN	2	
10	61472-88L00	LABEL, MAG COVER	1	
11	69711-93E10	LABEL (S.I.G.P.)	1	
12	61494-88L01	LABEL, OIL & CLEARANCE	1	

FIG.143A

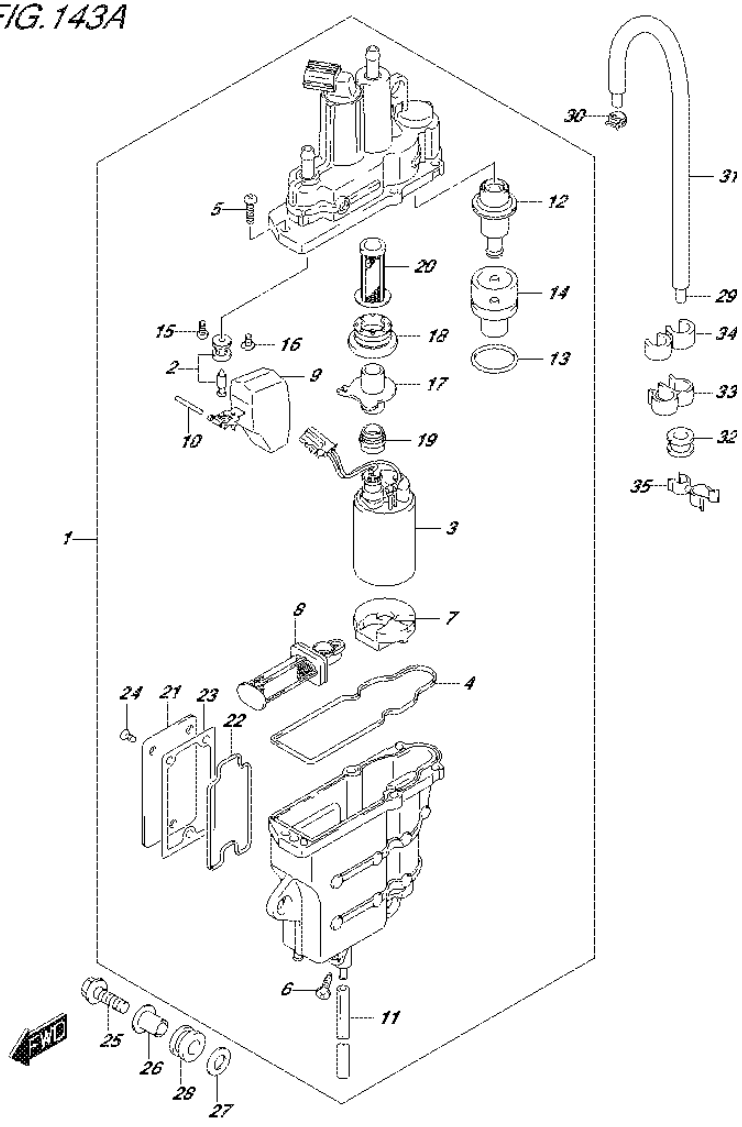

DF60A_E01_016_143A
FUEL VAPOR SEPARATOR

FIG.143A (1-E-2) FUEL VAPOR SEPARATOR (DF40A E01)

REF NO.	PART NO.	DESCRIPTION	Q'TY	REMARKS
1	15600-88L02	SEPARATOR ASSY, FUEL VAPOR	1	
2	13370-88L00	.VALVE ASSY, NEEDLE	1	
3	15200-88L00	.PUMP ASSY, FUEL	1	
4	15626-88L00	.SEAL	1	
5	15628-99E00	.SCREW (L:15)	5	
6	15629-99E10	.SCREW, DRAIN	1	
7	15641-88L00	.SPACER	1	
8	15642-88L00	.FILTER ASSY	1	
9	15650-99E00	.FLOAT	1	
10	15654-88L00	.PIN	1	
11	15683-87J00	.HOSE, DRAIN (L:120)	1	
12	15760-88L00	.REGULATOR ASSY	1	
13	15644-88L00	.O RING	1	
14	15645-88L00	.HOLDER, REGULATOR	1	
15	02112-0408A	.SCREW	1	
16	02142-0408B	.SCREW	1	
17	15643-88L00	.JOINT	1	
18	15641-88L20	.BUSH	1	
19	15641-88L40	.BUSH	1	
20	15642-88L10	.FILTER	1	
21	15612-88L00	.COVER	1	
22	15613-88L00	.O RING	1	
23	15613-92J00	.GASKET	1	
24	15614-88L00	.SCREW	3	
25	01550-06307	BOLT	3	
26	09169-06075	WASHER	3	
27	09160-06084	WASHER (6.5X18X1.6)	3	
28	09320-09039	CUSHION	3	
29	09352-50823-00B	HOSE (5X8.2X2000)	1	L:2000->770
30	09401-08412	CLIP	1	
31	18498-88L10	PROTECTOR, EVAP HOSE (L:730)	1	
32	09320-08076	GROMMET	1	
33	09408-00043	CLAMP	1	
34	09408-00121	CLAMP	1	
35	09408-00145	CLIP	1	

FIG.143B

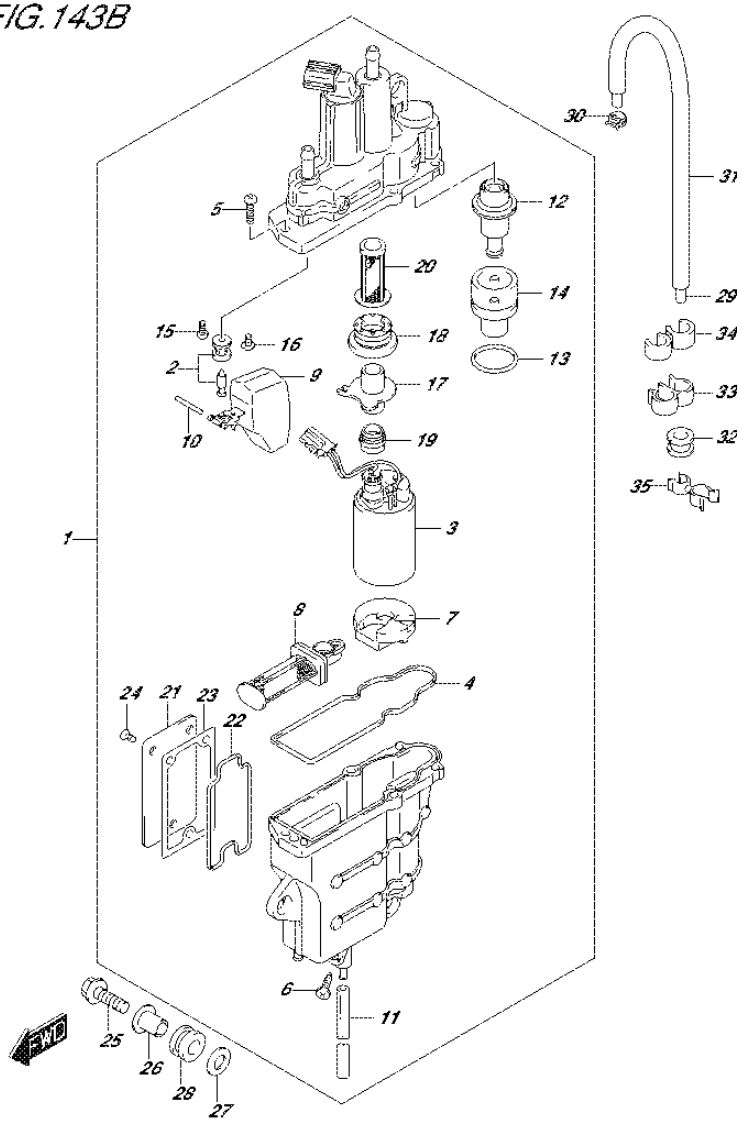

FIG.143B (1-E-3) FUEL VAPOR SEPARATOR (DF40AQH E01)

REF NO.	PART NO.	DESCRIPTION	Q'TY	REMARKS
1	15600-88L02	SEPARATOR ASSY, FUEL VAPOR	1	
2	13370-88L00	.VALVE ASSY, NEEDLE	1	
3	15200-88L00	.PUMP ASSY, FUEL	1	
4	15626-88L00	.SEAL	1	
5	15628-99E00	.SCREW (L:15)	5	
6	15629-99E10	.SCREW, DRAIN	1	
7	15641-88L00	.SPACER	1	
8	15642-88L00	.FILTER ASSY	1	
9	15650-99E00	.FLOAT	1	
10	15654-88L00	.PIN	1	
11	15683-87J00	.HOSE, DRAIN (L:120)	1	
12	15760-88L00	.REGULATOR ASSY	1	
13	15644-88L00	.O RING	1	
14	15645-88L00	.HOLDER, REGULATOR	1	
15	02112-0408A	.SCREW	1	
16	02142-0408B	.SCREW	1	
17	15643-88L00	.JOINT	1	
18	15641-88L20	.BUSH	1	
19	15641-88L40	.BUSH	1	
20	15642-88L10	.FILTER	1	
21	15612-88L00	.COVER	1	
22	15613-88L00	.O RING	1	
23	15613-92J00	.GASKET	1	
24	15614-88L00	.SCREW	3	
25	01550-06307	BOLT	3	
26	09169-06075	WASHER	3	
27	09160-06084	WASHER (6.5X18X1.6)	3	
28	09320-09039	CUSHION	3	
29	09352-50823-00B	HOSE (5X8.2X2000)	1	L:2000->770
30	09401-08412	CLIP	1	
31	18498-88L10	PROTECTOR, EVAP HOSE (L:730)	1	
32	09320-08076	GROMMET	1	
33	09408-00043	CLAMP	1	
34	09408-00121	CLAMP	1	
35	09408-00145	CLIP	1	

FIG.143C

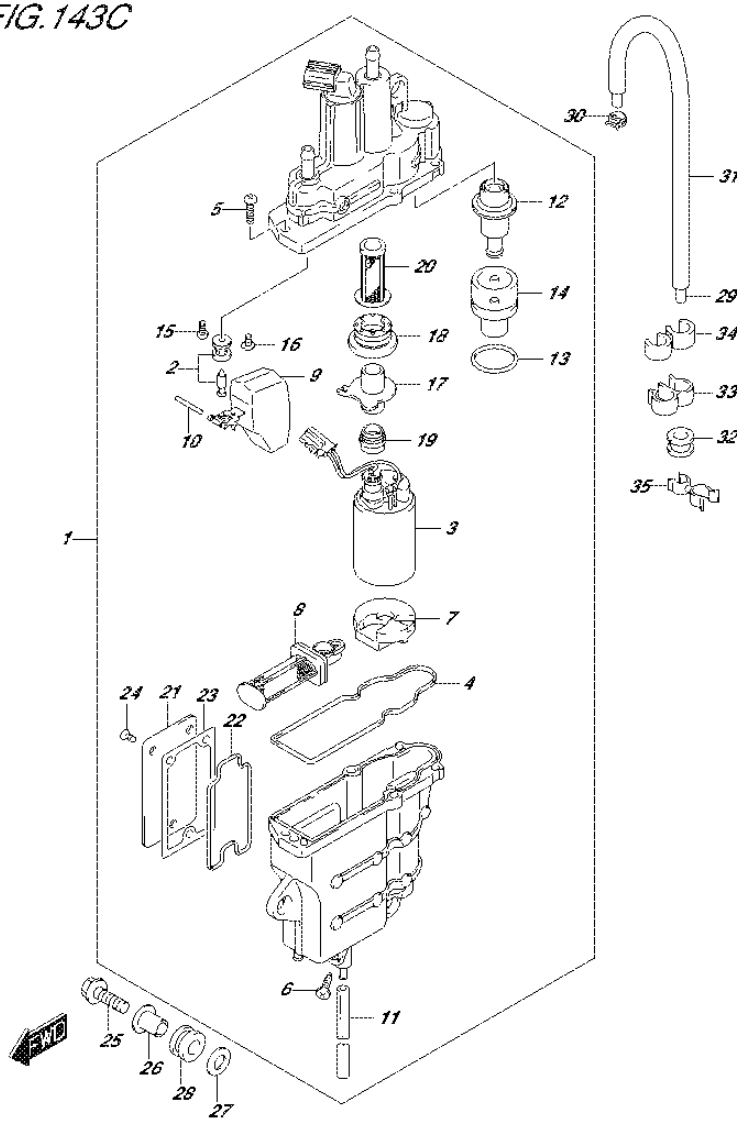

FIG.143C (1-E-4) FUEL VAPOR SEPARATOR (DF40ATH E01)

REF NO.	PART NO.	DESCRIPTION	Q'TY	REMARKS
1	15600-88L02	SEPARATOR ASSY, FUEL VAPOR	1	
2	13370-88L00	.VALVE ASSY, NEEDLE	1	
3	15200-88L00	.PUMP ASSY, FUEL	1	
4	15626-88L00	.SEAL	1	
5	15628-99E00	.SCREW (L:15)	5	
6	15629-99E10	.SCREW, DRAIN	1	
7	15641-88L00	.SPACER	1	
8	15642-88L00	.FILTER ASSY	1	
9	15650-99E00	.FLOAT	1	
10	15654-88L00	.PIN	1	
11	15683-87J00	.HOSE, DRAIN (L:120)	1	
12	15760-88L00	.REGULATOR ASSY	1	
13	15644-88L00	.O RING	1	
14	15645-88L00	.HOLDER, REGULATOR	1	
15	02112-0408A	.SCREW	1	
16	02142-0408B	.SCREW	1	
17	15643-88L00	.JOINT	1	
18	15641-88L20	.BUSH	1	
19	15641-88L40	.BUSH	1	
20	15642-88L10	.FILTER	1	
21	15612-88L00	.COVER	1	
22	15613-88L00	.O RING	1	
23	15613-92J00	.GASKET	1	
24	15614-88L00	.SCREW	3	
25	01550-06307	BOLT	3	
26	09169-06075	WASHER	3	
27	09160-06084	WASHER (6.5X18X1.6)	3	
28	09320-09039	CUSHION	3	
29	09352-50823-00B	HOSE (5X8.2X2000)	1	L:2000->770
30	09401-08412	CLIP	1	
31	18498-88L10	PROTECTOR, EVAP HOSE (L:730)	1	
32	09320-08076	GROMMET	1	
33	09408-00043	CLAMP	1	
34	09408-00121	CLAMP	1	
35	09408-00145	CLIP	1	

FIG.143D

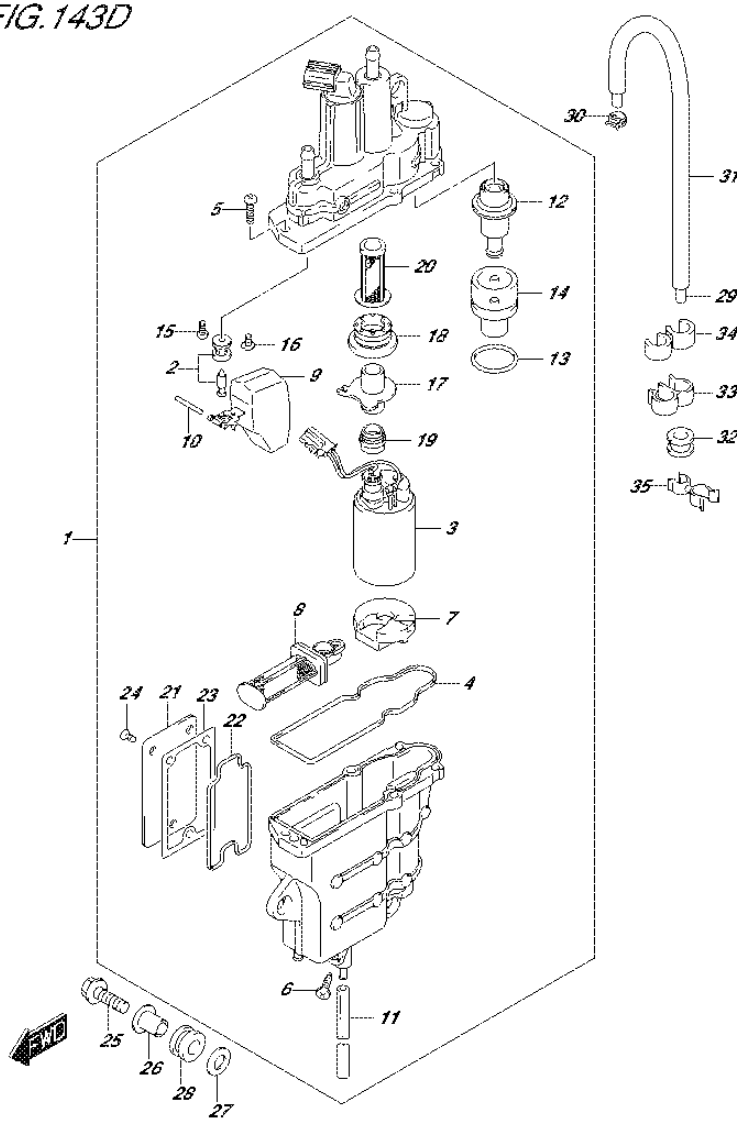

DF60A_E01_016_143D
FUEL VAPOR SEPARATOR

FIG.143D (1-E-5) FUEL VAPOR SEPARATOR (DF40AST E34)

REF NO.	PART NO.	DESCRIPTION	Q'TY	REMARKS
1	15600-88L02	SEPARATOR ASSY, FUEL VAPOR	1	
2	13370-88L00	.VALVE ASSY, NEEDLE	1	
3	15200-88L00	.PUMP ASSY, FUEL	1	
4	15626-88L00	.SEAL	1	
5	15628-99E00	.SCREW (L:15)	5	
6	15629-99E10	.SCREW, DRAIN	1	
7	15641-88L00	.SPACER	1	
8	15642-88L00	.FILTER ASSY	1	
9	15650-99E00	.FLOAT	1	
10	15654-88L00	.PIN	1	
11	15683-87J00	.HOSE, DRAIN (L:120)	1	
12	15760-88L00	.REGULATOR ASSY	1	
13	15644-88L00	.O RING	1	
14	15645-88L00	.HOLDER, REGULATOR	1	
15	02112-0408A	.SCREW	1	
16	02142-0408B	.SCREW	1	
17	15643-88L00	.JOINT	1	
18	15641-88L20	.BUSH	1	
19	15641-88L40	.BUSH	1	
20	15642-88L10	.FILTER	1	
21	15612-88L00	.COVER	1	
22	15613-88L00	.O RING	1	
23	15613-92J00	.GASKET	1	
24	15614-88L00	.SCREW	3	
25	01550-06307	BOLT	3	
26	09169-06075	WASHER	3	
27	09160-06084	WASHER (6.5X18X1.6)	3	
28	09320-09039	CUSHION	3	
29	09352-50823-00B	HOSE (5X8.2X2000)	1	L:2000->770
30	09401-08412	CLIP	1	
31	18498-88L10	PROTECTOR, EVAP HOSE (L:730)	1	
32	09320-08076	GROMMET	1	
33	09408-00043	CLAMP	1	
34	09408-00121	CLAMP	1	
35	09408-00145	CLIP	1	

FIG.143E

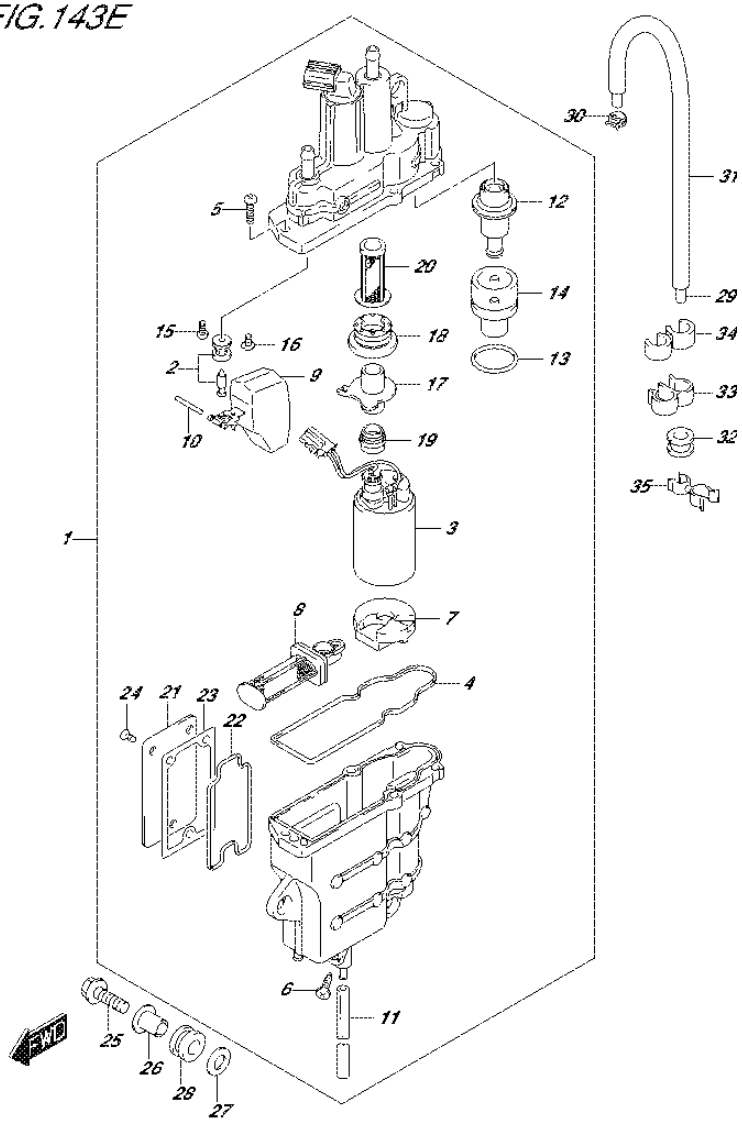

FIG.143E (1-E-6) FUEL VAPOR SEPARATOR (DF50A E01)

REF NO.	PART NO.	DESCRIPTION	Q'TY	REMARKS
1	15600-88L02	SEPARATOR ASSY, FUEL VAPOR	1	
2	13370-88L00	.VALVE ASSY, NEEDLE	1	
3	15200-88L00	.PUMP ASSY, FUEL	1	
4	15626-88L00	.SEAL	1	
5	15628-99E00	.SCREW (L:15)	5	
6	15629-99E10	.SCREW, DRAIN	1	
7	15641-88L00	.SPACER	1	
8	15642-88L00	.FILTER ASSY	1	
9	15650-99E00	.FLOAT	1	
10	15654-88L00	.PIN	1	
11	15683-87J00	.HOSE, DRAIN (L:120)	1	
12	15760-88L00	.REGULATOR ASSY	1	
13	15644-88L00	.O RING	1	
14	15645-88L00	.HOLDER, REGULATOR	1	
15	02112-0408A	.SCREW	1	
16	02142-0408B	.SCREW	1	
17	15643-88L00	.JOINT	1	
18	15641-88L20	.BUSH	1	
19	15641-88L40	.BUSH	1	
20	15642-88L10	.FILTER	1	
21	15612-88L00	.COVER	1	
22	15613-88L00	.O RING	1	
23	15613-92J00	.GASKET	1	
24	15614-88L00	.SCREW	3	
25	01550-06307	BOLT	3	
26	09169-06075	WASHER	3	
27	09160-06084	WASHER (6.5X18X1.6)	3	
28	09320-09039	CUSHION	3	
29	09352-50823-00B	HOSE (5X8.2X2000)	1	L:2000->770
30	09401-08412	CLIP	1	
31	18498-88L10	PROTECTOR, EVAP HOSE (L:730)	1	
32	09320-08076	GROMMET	1	
33	09408-00043	CLAMP	1	
34	09408-00121	CLAMP	1	
35	09408-00145	CLIP	1	

FIG.143F

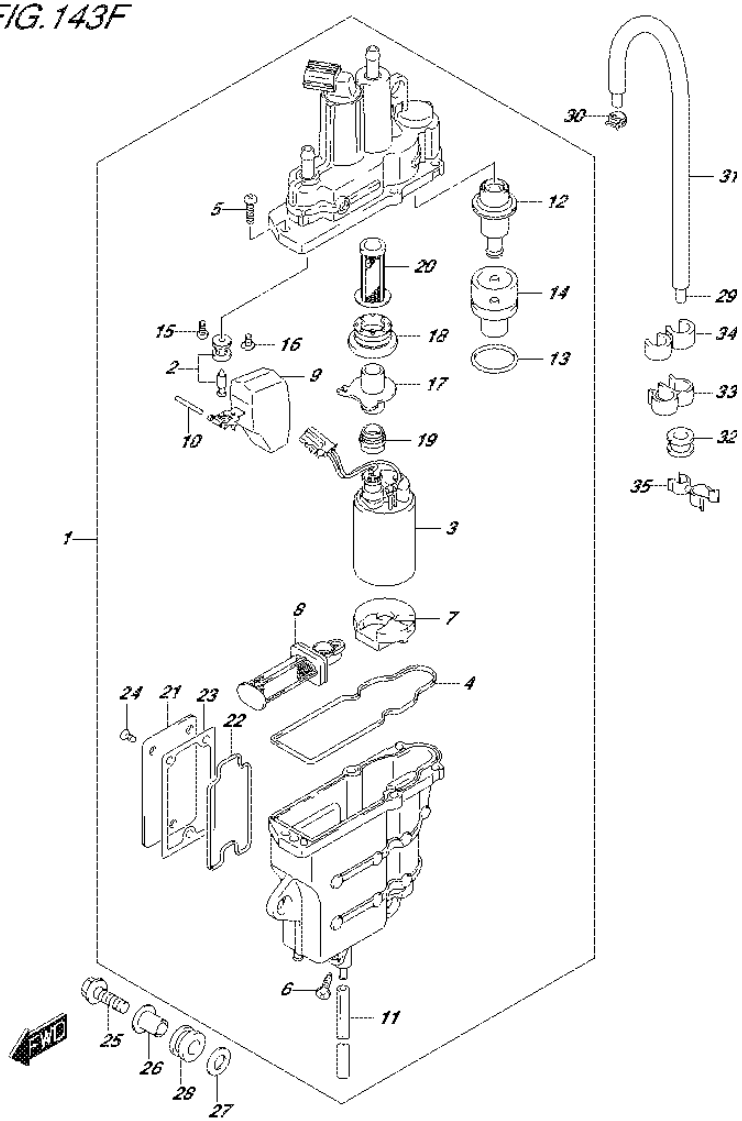

FIG.143F (1-E-7) FUEL VAPOR SEPARATOR (DF50ATH E01)

REF NO.	PART NO.	DESCRIPTION	Q'TY	REMARKS
1	15600-88L02	SEPARATOR ASSY, FUEL VAPOR	1	
2	13370-88L00	.VALVE ASSY, NEEDLE	1	
3	15200-88L00	.PUMP ASSY, FUEL	1	
4	15626-88L00	.SEAL	1	
5	15628-99E00	.SCREW (L:15)	5	
6	15629-99E10	.SCREW, DRAIN	1	
7	15641-88L00	.SPACER	1	
8	15642-88L00	.FILTER ASSY	1	
9	15650-99E00	.FLOAT	1	
10	15654-88L00	.PIN	1	
11	15683-87J00	.HOSE, DRAIN (L:120)	1	
12	15760-88L00	.REGULATOR ASSY	1	
13	15644-88L00	.O RING	1	
14	15645-88L00	.HOLDER, REGULATOR	1	
15	02112-0408A	.SCREW	1	
16	02142-0408B	.SCREW	1	
17	15643-88L00	.JOINT	1	
18	15641-88L20	.BUSH	1	
19	15641-88L40	.BUSH	1	
20	15642-88L10	.FILTER	1	
21	15612-88L00	.COVER	1	
22	15613-88L00	.O RING	1	
23	15613-92J00	.GASKET	1	
24	15614-88L00	.SCREW	3	
25	01550-06307	BOLT	3	
26	09169-06075	WASHER	3	
27	09160-06084	WASHER (6.5X18X1.6)	3	
28	09320-09039	CUSHION	3	
29	09352-50823-00B	HOSE (5X8.2X2000)	1	L:2000->770
30	09401-08412	CLIP	1	
31	18498-88L10	PROTECTOR, EVAP HOSE (L:730)	1	
32	09320-08076	GROMMET	1	
33	09408-00043	CLAMP	1	
34	09408-00121	CLAMP	1	
35	09408-00145	CLIP	1	

FIG.143G

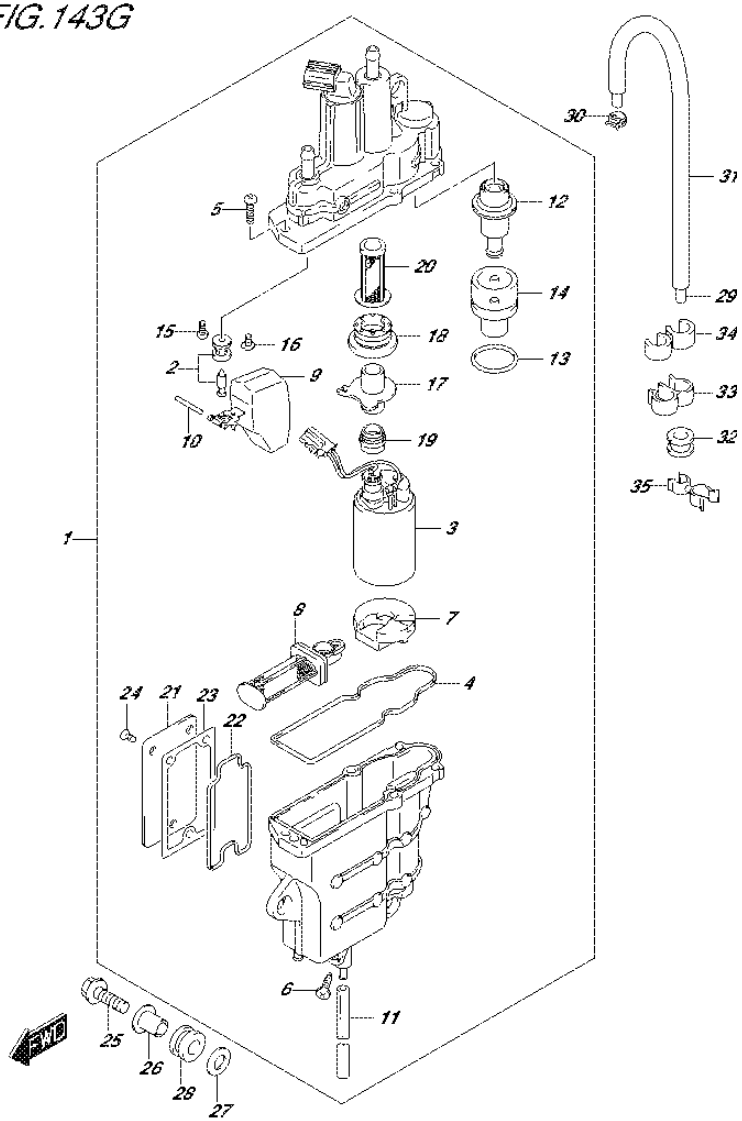

DF60A_E01_016_143G
FUEL VAPOR SEPARATOR

FIG.143G (1-E-8) FUEL VAPOR SEPARATOR (DF60A E01)

REF NO.	PART NO.	DESCRIPTION	Q'TY	REMARKS
1	15600-88L02	SEPARATOR ASSY, FUEL VAPOR	1	
2	13370-88L00	.VALVE ASSY, NEEDLE	1	
3	15200-88L00	.PUMP ASSY, FUEL	1	
4	15626-88L00	.SEAL	1	
5	15628-99E00	.SCREW (L:15)	5	
6	15629-99E10	.SCREW, DRAIN	1	
7	15641-88L00	.SPACER	1	
8	15642-88L00	.FILTER ASSY	1	
9	15650-99E00	.FLOAT	1	
10	15654-88L00	.PIN	1	
11	15683-87J00	.HOSE, DRAIN (L:120)	1	
12	15760-88L00	.REGULATOR ASSY	1	
13	15644-88L00	.O RING	1	
14	15645-88L00	.HOLDER, REGULATOR	1	
15	02112-0408A	.SCREW	1	
16	02142-0408B	.SCREW	1	
17	15643-88L00	.JOINT	1	
18	15641-88L20	.BUSH	1	
19	15641-88L40	.BUSH	1	
20	15642-88L10	.FILTER	1	
21	15612-88L00	.COVER	1	
22	15613-88L00	.O RING	1	
23	15613-92J00	.GASKET	1	
24	15614-88L00	.SCREW	3	
25	01550-06307	BOLT	3	
26	09169-06075	WASHER	3	
27	09160-06084	WASHER (6.5X18X1.6)	3	
28	09320-09039	CUSHION	3	
29	09352-50823-00B	HOSE (5X8.2X2000)	1	L:2000->770
30	09401-08412	CLIP	1	
31	18498-88L10	PROTECTOR, EVAP HOSE (L:730)	1	
32	09320-08076	GROMMET	1	
33	09408-00043	CLAMP	1	
34	09408-00121	CLAMP	1	
35	09408-00145	CLIP	1	

FIG.143H

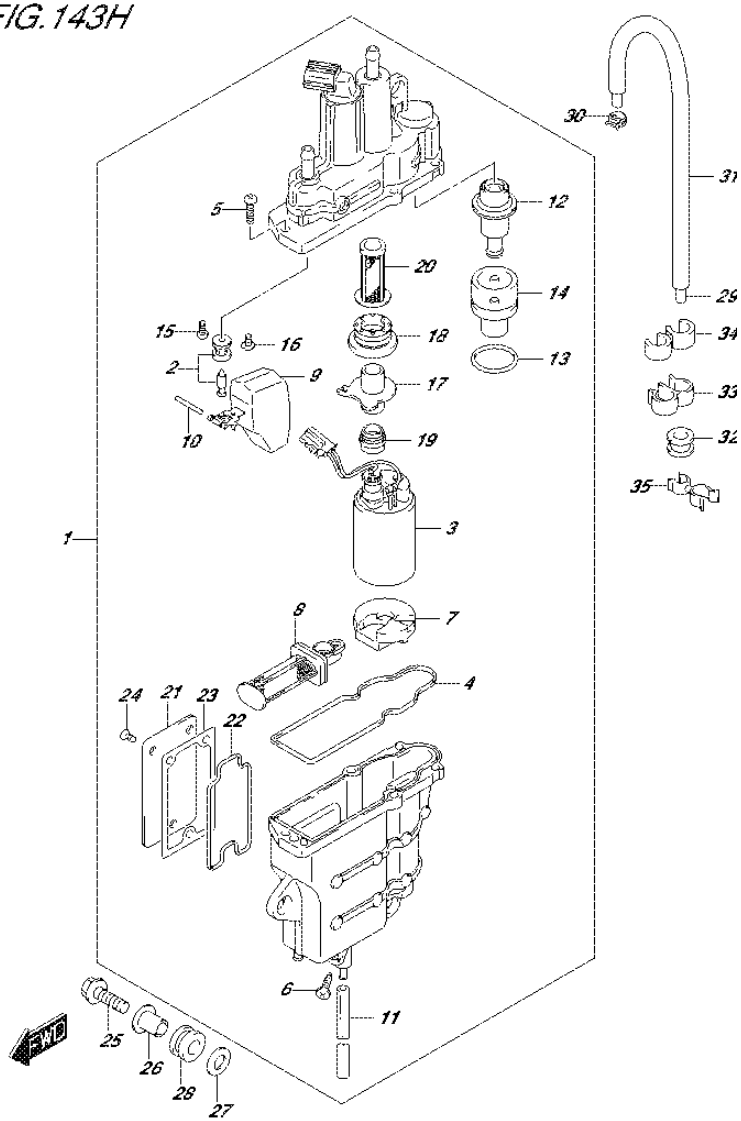

FIG.143H (1-E-9) FUEL VAPOR SEPARATOR (DF60A E40)

REF NO.	PART NO.	DESCRIPTION	Q'TY	REMARKS
1	15600-88L13	SEPARATOR ASSY, FUEL VAPOR	1	
2	13370-88L10	.VALVE ASSY, NEEDLE	1	
3	15200-88L10	.PUMP ASSY, FUEL	1	
4	15626-88L10	.SEAL	1	
5	15628-99E00	.SCREW (L:15)	5	
6	15629-99E10	.SCREW, DRAIN	1	
7	15641-88L10	.SPACER	1	
8	15642-88L00	.FILTER ASSY	1	
9	15650-99E00	.FLOAT	1	
10	15654-88L00	.PIN	1	
11	15683-87J00	.HOSE, DRAIN (L:120)	1	
12	15760-88L00	.REGULATOR ASSY	1	
13	15644-88L10	.O RING	1	
14	15645-88L00	.HOLDER, REGULATOR	1	
15	13614-89J00	.SCREW	1	
16	13614-93J00	.SCREW	1	
17	15643-88L00	.JOINT	1	
18	15641-88L31	.BUSH	1	
19	15641-88L51	.BUSH	1	
20	15642-88L10	.FILTER	1	
21	15612-88L00	.COVER	1	
22	15613-88L00	.O RING	1	
23	15613-92J00	.GASKET	1	
24	15614-88L00	.SCREW	3	
25	01550-06307	BOLT	3	
26	09169-06075	WASHER	3	
27	09160-06084	WASHER (6.5X18X1.6)	3	
28	09320-09039	CUSHION	3	
29	09352-50823-00B	HOSE (5X8.2X2000)	1	L:2000->770
30	09401-08412	CLIP	1	
31	18498-88L10	PROTECTOR, EVAP HOSE (L:730)	1	
32	09320-08076	GROMMET	1	
33	09408-00043	CLAMP	1	
34	09408-00121	CLAMP	1	
35	09408-00145	CLIP	1	

FIG.143J

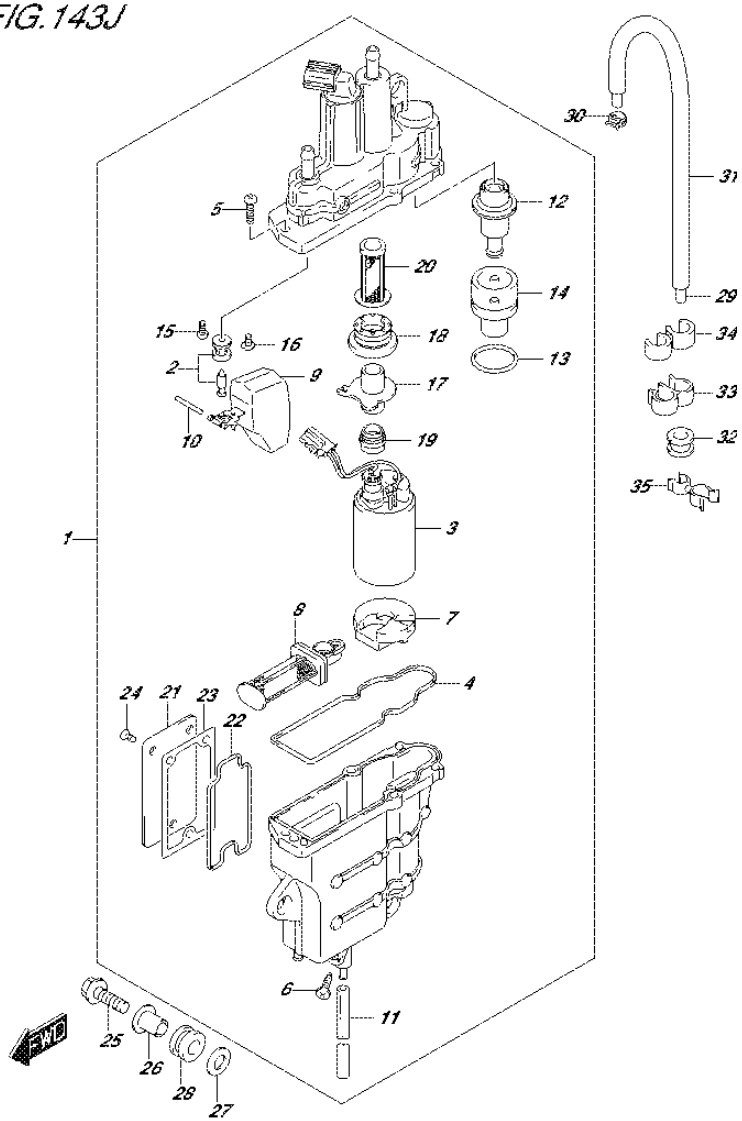

FIG.143J (1-E-10) FUEL VAPOR SEPARATOR (DF60AQH E01)

REF NO.	PART NO.	DESCRIPTION	Q'TY	REMARKS
1	15600-88L02	SEPARATOR ASSY, FUEL VAPOR	1	
2	13370-88L00	.VALVE ASSY, NEEDLE	1	
3	15200-88L00	.PUMP ASSY, FUEL	1	
4	15626-88L00	.SEAL	1	
5	15628-99E00	.SCREW (L:15)	5	
6	15629-99E10	.SCREW, DRAIN	1	
7	15641-88L00	.SPACER	1	
8	15642-88L00	.FILTER ASSY	1	
9	15650-99E00	.FLOAT	1	
10	15654-88L00	.PIN	1	
11	15683-87J00	.HOSE, DRAIN (L:120)	1	
12	15760-88L00	.REGULATOR ASSY	1	
13	15644-88L00	.O RING	1	
14	15645-88L00	.HOLDER, REGULATOR	1	
15	02112-0408A	.SCREW	1	
16	02142-0408B	.SCREW	1	
17	15643-88L00	.JOINT	1	
18	15641-88L20	.BUSH	1	
19	15641-88L40	.BUSH	1	
20	15642-88L10	.FILTER	1	
21	15612-88L00	.COVER	1	
22	15613-88L00	.O RING	1	
23	15613-92J00	.GASKET	1	
24	15614-88L00	.SCREW	3	
25	01550-06307	BOLT	3	
26	09169-06075	WASHER	3	
27	09160-06084	WASHER (6.5X18X1.6)	3	
28	09320-09039	CUSHION	3	
29	09352-50823-00B	HOSE (5X8.2X2000)	1	L:2000->770
30	09401-08412	CLIP	1	
31	18498-88L10	PROTECTOR, EVAP HOSE (L:730)	1	
32	09320-08076	GROMMET	1	
33	09408-00043	CLAMP	1	
34	09408-00121	CLAMP	1	
35	09408-00145	CLIP	1	

FIG.143K

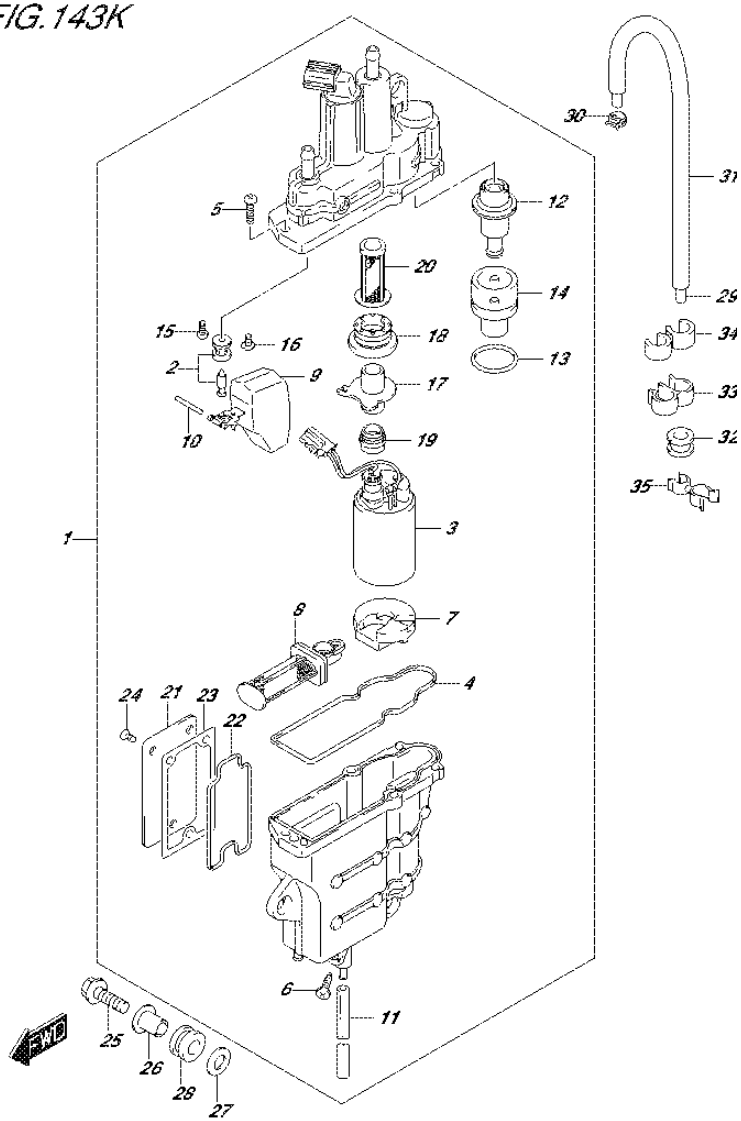

FIG.143K (1-E-11) FUEL VAPOR SEPARATOR (DF60AQH E40)

REF NO.	PART NO.	DESCRIPTION	Q'TY	REMARKS
1	15600-88L13	SEPARATOR ASSY, FUEL VAPOR	1	
2	13370-88L10	.VALVE ASSY, NEEDLE	1	
3	15200-88L10	.PUMP ASSY, FUEL	1	
4	15626-88L10	.SEAL	1	
5	15628-99E00	.SCREW (L:15)	5	
6	15629-99E10	.SCREW, DRAIN	1	
7	15641-88L10	.SPACER	1	
8	15642-88L00	.FILTER ASSY	1	
9	15650-99E00	.FLOAT	1	
10	15654-88L00	.PIN	1	
11	15683-87J00	.HOSE, DRAIN (L:120)	1	
12	15760-88L00	.REGULATOR ASSY	1	
13	15644-88L10	.O RING	1	
14	15645-88L00	.HOLDER, REGULATOR	1	
15	13614-89J00	.SCREW	1	
16	13614-93J00	.SCREW	1	
17	15643-88L00	.JOINT	1	
18	15641-88L31	.BUSH	1	
19	15641-88L51	.BUSH	1	
20	15642-88L10	.FILTER	1	
21	15612-88L00	.COVER	1	
22	15613-88L00	.O RING	1	
23	15613-92J00	.GASKET	1	
24	15614-88L00	.SCREW	3	
25	01550-06307	BOLT	3	
26	09169-06075	WASHER	3	
27	09160-06084	WASHER (6.5X18X1.6)	3	
28	09320-09039	CUSHION	3	
29	09352-50823-00B	HOSE (5X8.2X2000)	1	L:2000->770
30	09401-08412	CLIP	1	
31	18498-88L10	PROTECTOR, EVAP HOSE (L:730)	1	
32	09320-08076	GROMMET	1	
33	09408-00043	CLAMP	1	
34	09408-00121	CLAMP	1	
35	09408-00145	CLIP	1	

FIG.143L

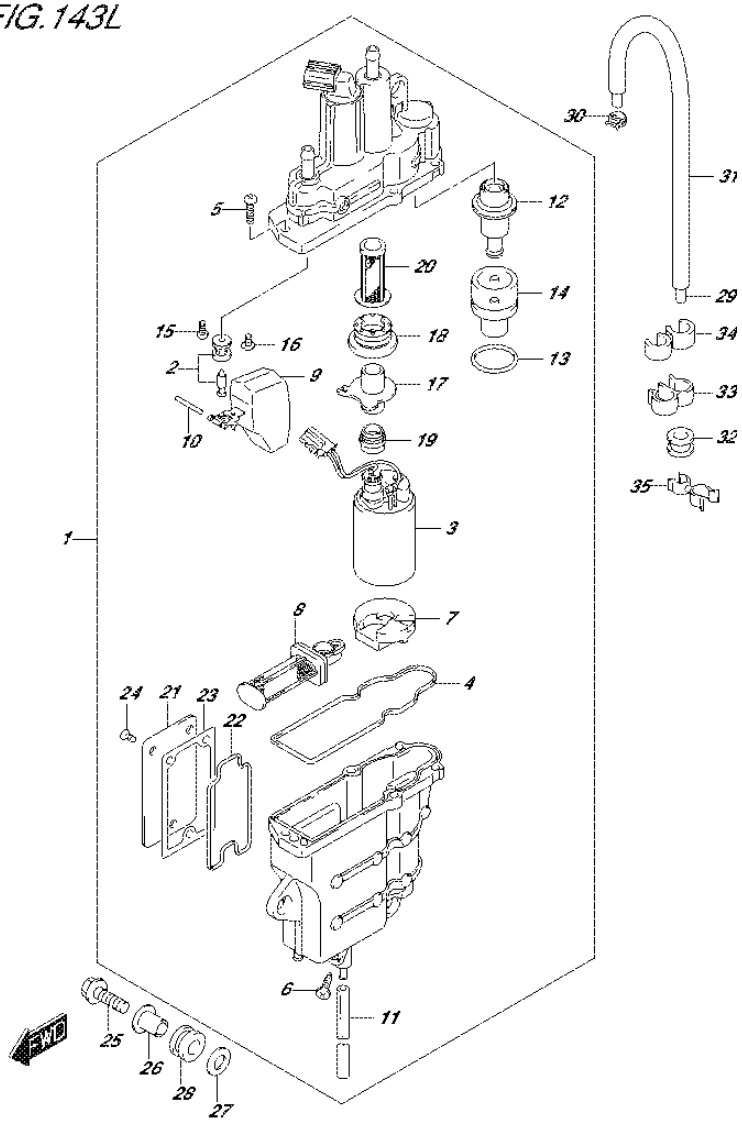

FIG.143L (1-E-12) FUEL VAPOR SEPARATOR (DF60ATH E01)

REF NO.	PART NO.	DESCRIPTION	Q'TY	REMARKS
1	15600-88L02	SEPARATOR ASSY, FUEL VAPOR	1	
2	13370-88L00	.VALVE ASSY, NEEDLE	1	
3	15200-88L00	.PUMP ASSY, FUEL	1	
4	15626-88L00	.SEAL	1	
5	15628-99E00	.SCREW (L:15)	5	
6	15629-99E10	.SCREW, DRAIN	1	
7	15641-88L00	.SPACER	1	
8	15642-88L00	.FILTER ASSY	1	
9	15650-99E00	.FLOAT	1	
10	15654-88L00	.PIN	1	
11	15683-87J00	.HOSE, DRAIN (L:120)	1	
12	15760-88L00	.REGULATOR ASSY	1	
13	15644-88L00	.O RING	1	
14	15645-88L00	.HOLDER, REGULATOR	1	
15	02112-0408A	.SCREW	1	
16	02142-0408B	.SCREW	1	
17	15643-88L00	.JOINT	1	
18	15641-88L20	.BUSH	1	
19	15641-88L40	.BUSH	1	
20	15642-88L10	.FILTER	1	
21	15612-88L00	.COVER	1	
22	15613-88L00	.O RING	1	
23	15613-92J00	.GASKET	1	
24	15614-88L00	.SCREW	3	
25	01550-06307	BOLT	3	
26	09169-06075	WASHER	3	
27	09160-06084	WASHER (6.5X18X1.6)	3	
28	09320-09039	CUSHION	3	
29	09352-50823-00B	HOSE (5X8.2X2000)	1	L:2000->770
30	09401-08412	CLIP	1	
31	18498-88L10	PROTECTOR, EVAP HOSE (L:730)	1	
32	09320-08076	GROMMET	1	
33	09408-00043	CLAMP	1	
34	09408-00121	CLAMP	1	
35	09408-00145	CLIP	1	

FIG.143M

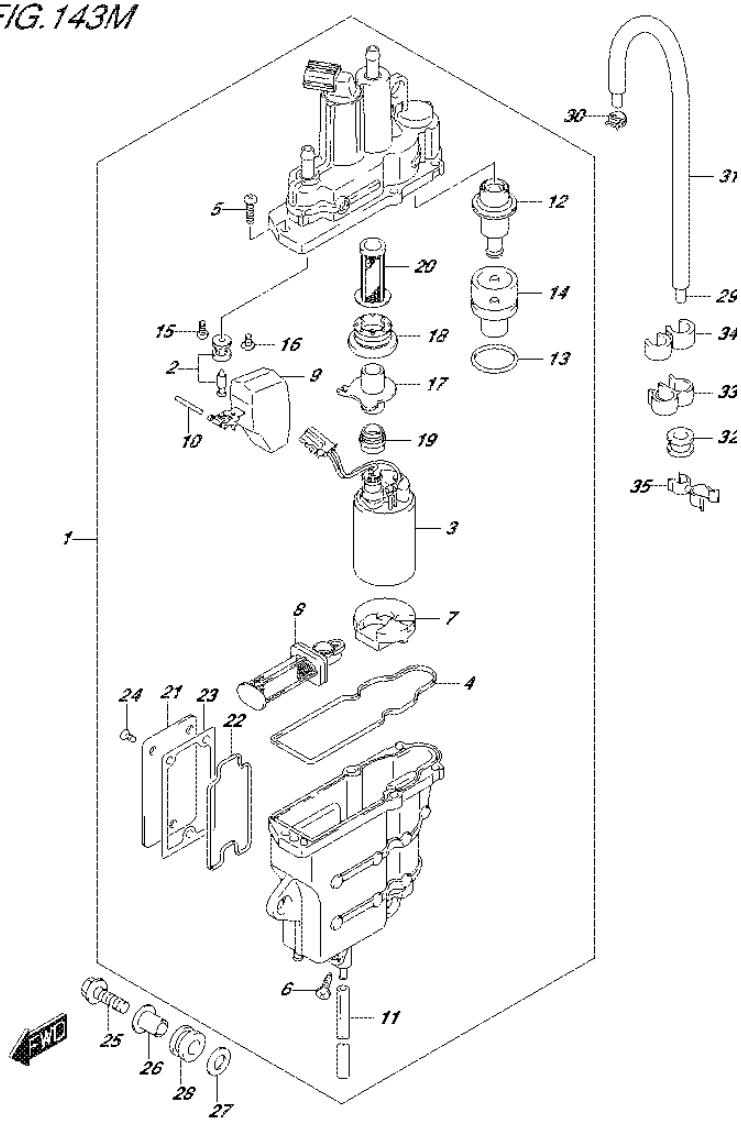

FIG.143M (1-E-13) FUEL VAPOR SEPARATOR (DF60ATH E40)

REF NO.	PART NO.	DESCRIPTION	Q'TY	REMARKS
1	15600-88L13	SEPARATOR ASSY, FUEL VAPOR	1	
2	13370-88L10	.VALVE ASSY, NEEDLE	1	
3	15200-88L10	.PUMP ASSY, FUEL	1	
4	15626-88L10	.SEAL	1	
5	15628-99E00	.SCREW (L:15)	5	
6	15629-99E10	.SCREW, DRAIN	1	
7	15641-88L10	.SPACER	1	
8	15642-88L00	.FILTER ASSY	1	
9	15650-99E00	.FLOAT	1	
10	15654-88L00	.PIN	1	
11	15683-87J00	.HOSE, DRAIN (L:120)	1	
12	15760-88L00	.REGULATOR ASSY	1	
13	15644-88L10	.O RING	1	
14	15645-88L00	.HOLDER, REGULATOR	1	
15	13614-89J00	.SCREW	1	
16	13614-93J00	.SCREW	1	
17	15643-88L00	.JOINT	1	
18	15641-88L31	.BUSH	1	
19	15641-88L51	.BUSH	1	
20	15642-88L10	.FILTER	1	
21	15612-88L00	.COVER	1	
22	15613-88L00	.O RING	1	
23	15613-92J00	.GASKET	1	
24	15614-88L00	.SCREW	3	
25	01550-06307	BOLT	3	
26	09169-06075	WASHER	3	
27	09160-06084	WASHER (6.5X18X1.6)	3	
28	09320-09039	CUSHION	3	
29	09352-50823-00B	HOSE (5X8.2X2000)	1	L:2000->770
30	09401-08412	CLIP	1	
31	18498-88L10	PROTECTOR, EVAP HOSE (L:730)	1	
32	09320-08076	GROMMET	1	
33	09408-00043	CLAMP	1	
34	09408-00121	CLAMP	1	
35	09408-00145	CLIP	1	

FIG.143N

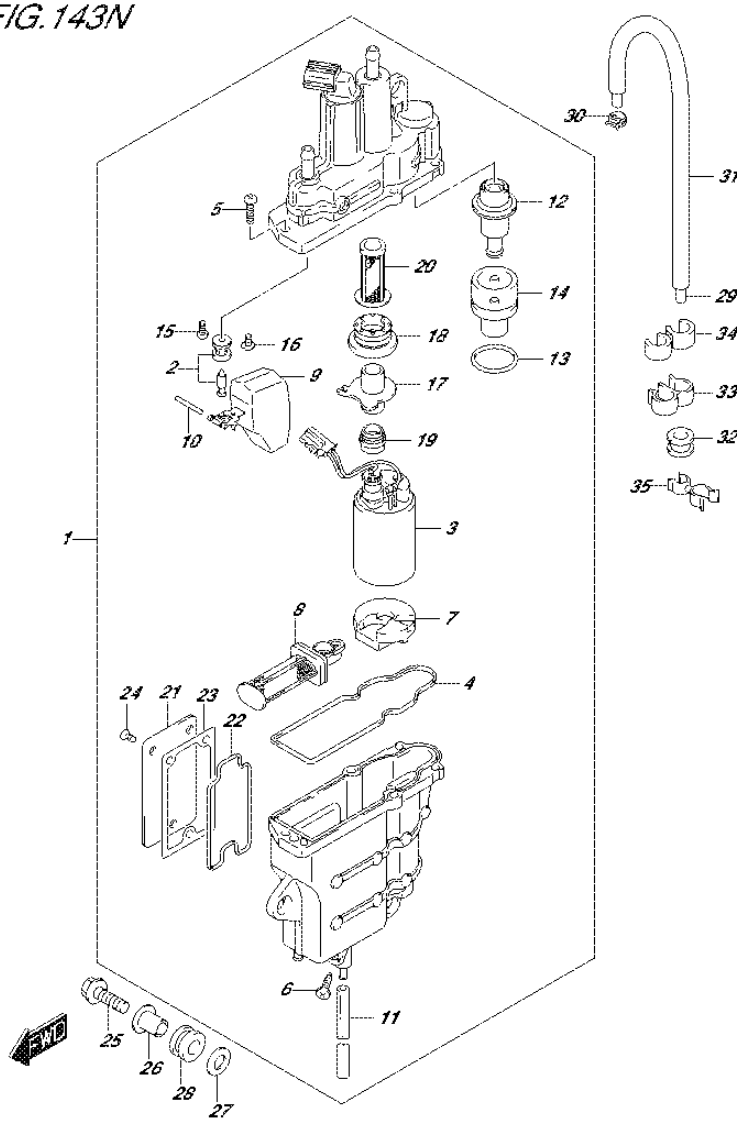

DF60A_E01_016_143N
FUEL VAPOR SEPARATOR

FIG.143N (1-E-14) FUEL VAPOR SEPARATOR (DF50AVT E01)

REF NO.	PART NO.	DESCRIPTION	Q'TY	REMARKS
1	15600-88L02	SEPARATOR ASSY, FUEL VAPOR	1	
2	13370-88L00	.VALVE ASSY, NEEDLE	1	
3	15200-88L00	.PUMP ASSY, FUEL	1	
4	15626-88L00	.SEAL	1	
5	15628-99E00	.SCREW (L:15)	5	
6	15629-99E10	.SCREW, DRAIN	1	
7	15641-88L00	.SPACER	1	
8	15642-88L00	.FILTER ASSY	1	
9	15650-99E00	.FLOAT	1	
10	15654-88L00	.PIN	1	
11	15683-87J00	.HOSE, DRAIN (L:120)	1	
12	15760-88L00	.REGULATOR ASSY	1	
13	15644-88L00	.O RING	1	
14	15645-88L00	.HOLDER, REGULATOR	1	
15	02112-0408A	.SCREW	1	
16	02142-0408B	.SCREW	1	
17	15643-88L00	.JOINT	1	
18	15641-88L20	.BUSH	1	
19	15641-88L40	.BUSH	1	
20	15642-88L10	.FILTER	1	
21	15612-88L00	.COVER	1	
22	15613-88L00	.O RING	1	
23	15613-92J00	.GASKET	1	
24	15614-88L00	.SCREW	3	
25	01550-06307	BOLT	3	
26	09169-06075	WASHER	3	
27	09160-06084	WASHER (6.5X18X1.6)	3	
28	09320-09039	CUSHION	3	
29	09352-50823-00B	HOSE (5X8.2X2000)	1	L:2000->770
30	09401-08412	CLIP	1	
31	18498-88L10	PROTECTOR, EVAP HOSE (L:730)	1	
32	09320-08076	GROMMET	1	
33	09408-00043	CLAMP	1	
34	09408-00121	CLAMP	1	
35	09408-00145	CLIP	1	

FIG.143P

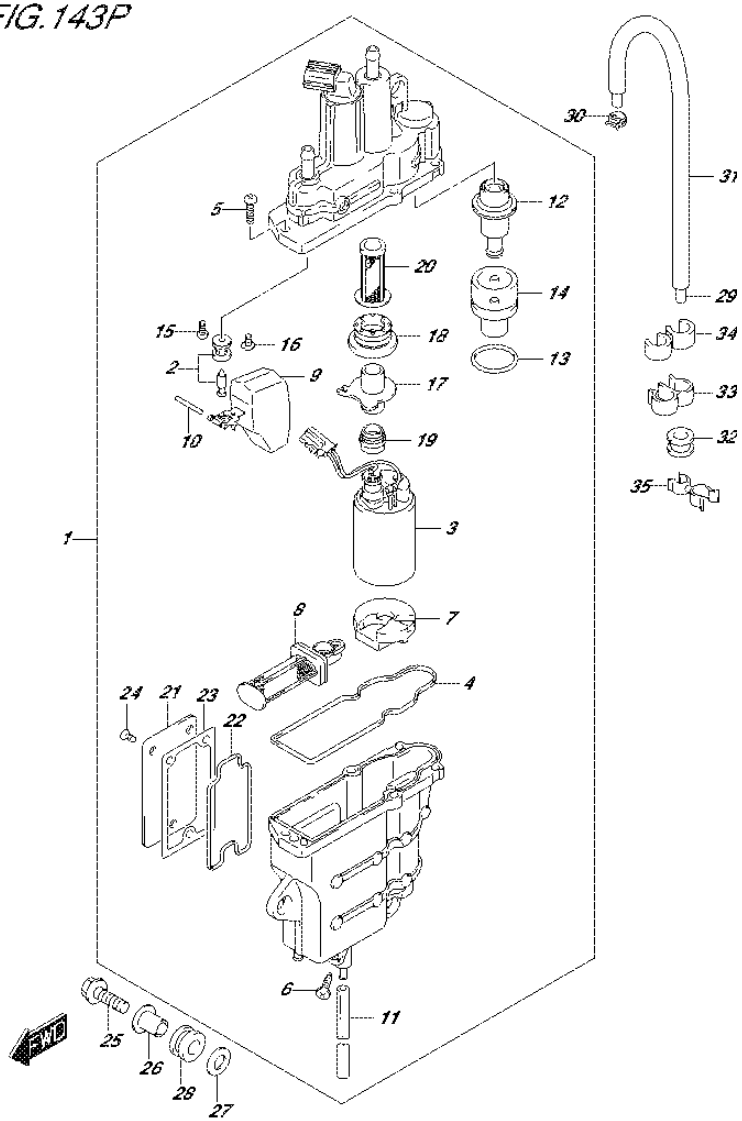

FIG.143P (1-E-15) FUEL VAPOR SEPARATOR (DF50AVTH E01)

REF NO.	PART NO.	DESCRIPTION	Q'TY	REMARKS
1	15600-88L02	SEPARATOR ASSY, FUEL VAPOR	1	
2	13370-88L00	.VALVE ASSY, NEEDLE	1	
3	15200-88L00	.PUMP ASSY, FUEL	1	
4	15626-88L00	.SEAL	1	
5	15628-99E00	.SCREW (L:15)	5	
6	15629-99E10	.SCREW, DRAIN	1	
7	15641-88L00	.SPACER	1	
8	15642-88L00	.FILTER ASSY	1	
9	15650-99E00	.FLOAT	1	
10	15654-88L00	.PIN	1	
11	15683-87J00	.HOSE, DRAIN (L:120)	1	
12	15760-88L00	.REGULATOR ASSY	1	
13	15644-88L00	.O RING	1	
14	15645-88L00	.HOLDER, REGULATOR	1	
15	02112-0408A	.SCREW	1	
16	02142-0408B	.SCREW	1	
17	15643-88L00	.JOINT	1	
18	15641-88L20	.BUSH	1	
19	15641-88L40	.BUSH	1	
20	15642-88L10	.FILTER	1	
21	15612-88L00	.COVER	1	
22	15613-88L00	.O RING	1	
23	15613-92J00	.GASKET	1	
24	15614-88L00	.SCREW	3	
25	01550-06307	BOLT	3	
26	09169-06075	WASHER	3	
27	09160-06084	WASHER (6.5X18X1.6)	3	
28	09320-09039	CUSHION	3	
29	09352-50823-00B	HOSE (5X8.2X2000)	1	L:2000->770
30	09401-08412	CLIP	1	
31	18498-88L10	PROTECTOR, EVAP HOSE (L:730)	1	
32	09320-08076	GROMMET	1	
33	09408-00043	CLAMP	1	
34	09408-00121	CLAMP	1	
35	09408-00145	CLIP	1	

FIG.143R

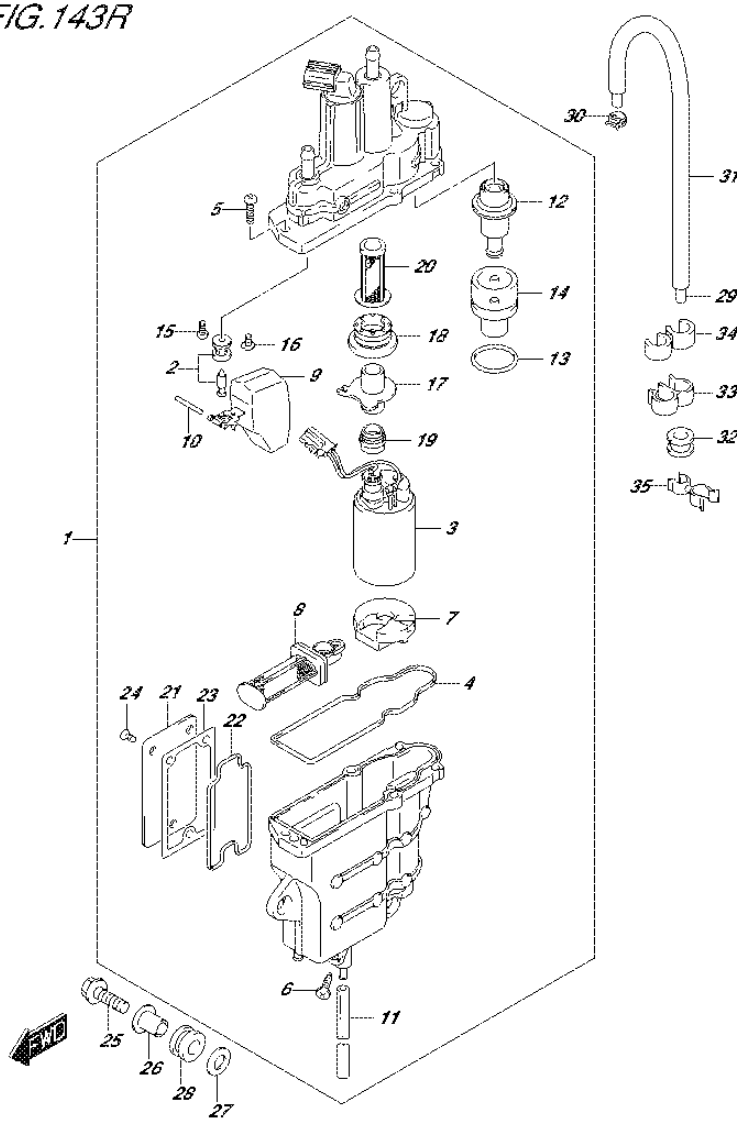

DF60A_E01_016_143R
FUEL VAPOR SEPARATOR

FIG.143R (1-F-2) FUEL VAPOR SEPARATOR (DF60AVT E01)

REF NO.	PART NO.	DESCRIPTION	Q'TY	REMARKS
1	15600-88L02	SEPARATOR ASSY, FUEL VAPOR	1	
2	13370-88L00	.VALVE ASSY, NEEDLE	1	
3	15200-88L00	.PUMP ASSY, FUEL	1	
4	15626-88L00	.SEAL	1	
5	15628-99E00	.SCREW (L:15)	5	
6	15629-99E10	.SCREW, DRAIN	1	
7	15641-88L00	.SPACER	1	
8	15642-88L00	.FILTER ASSY	1	
9	15650-99E00	.FLOAT	1	
10	15654-88L00	.PIN	1	
11	15683-87J00	.HOSE, DRAIN (L:120)	1	
12	15760-88L00	.REGULATOR ASSY	1	
13	15644-88L00	.O RING	1	
14	15645-88L00	.HOLDER, REGULATOR	1	
15	02112-0408A	.SCREW	1	
16	02142-0408B	.SCREW	1	
17	15643-88L00	.JOINT	1	
18	15641-88L20	.BUSH	1	
19	15641-88L40	.BUSH	1	
20	15642-88L10	.FILTER	1	
21	15612-88L00	.COVER	1	
22	15613-88L00	.O RING	1	
23	15613-92J00	.GASKET	1	
24	15614-88L00	.SCREW	3	
25	01550-06307	BOLT	3	
26	09169-06075	WASHER	3	
27	09160-06084	WASHER (6.5X18X1.6)	3	
28	09320-09039	CUSHION	3	
29	09352-50823-00B	HOSE (5X8.2X2000)	1	L:2000->770
30	09401-08412	CLIP	1	
31	18498-88L10	PROTECTOR, EVAP HOSE (L:730)	1	
32	09320-08076	GROMMET	1	
33	09408-00043	CLAMP	1	
34	09408-00121	CLAMP	1	
35	09408-00145	CLIP	1	

FIG.143S

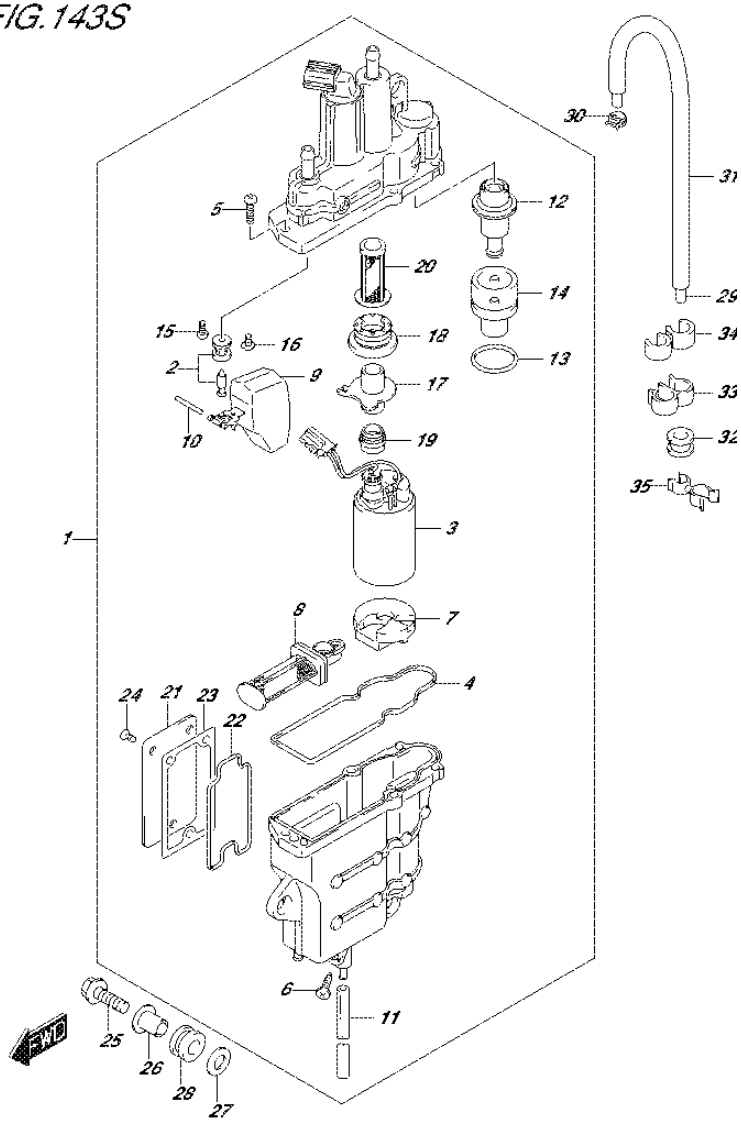

FIG.143S (1-F-3) FUEL VAPOR SEPARATOR (DF60AVT E40)

REF NO.	PART NO.	DESCRIPTION	Q'TY	REMARKS
1	15600-88L13	SEPARATOR ASSY, FUEL VAPOR	1	
2	13370-88L10	.VALVE ASSY, NEEDLE	1	
3	15200-88L10	.PUMP ASSY, FUEL	1	
4	15626-88L10	.SEAL	1	
5	15628-99E00	.SCREW (L:15)	5	
6	15629-99E10	.SCREW, DRAIN	1	
7	15641-88L10	.SPACER	1	
8	15642-88L00	.FILTER ASSY	1	
9	15650-99E00	.FLOAT	1	
10	15654-88L00	.PIN	1	
11	15683-87J00	.HOSE, DRAIN (L:120)	1	
12	15760-88L00	.REGULATOR ASSY	1	
13	15644-88L10	.O RING	1	
14	15645-88L00	.HOLDER, REGULATOR	1	
15	13614-89J00	.SCREW	1	
16	13614-93J00	.SCREW	1	
17	15643-88L00	.JOINT	1	
18	15641-88L31	.BUSH	1	
19	15641-88L51	.BUSH	1	
20	15642-88L10	.FILTER	1	
21	15612-88L00	.COVER	1	
22	15613-88L00	.O RING	1	
23	15613-92J00	.GASKET	1	
24	15614-88L00	.SCREW	3	
25	01550-06307	BOLT	3	
26	09169-06075	WASHER	3	
27	09160-06084	WASHER (6.5X18X1.6)	3	
28	09320-09039	CUSHION	3	
29	09352-50823-00B	HOSE (5X8.2X2000)	1	L:2000->770
30	09401-08412	CLIP	1	
31	18498-88L10	PROTECTOR, EVAP HOSE (L:730)	1	
32	09320-08076	GROMMET	1	
33	09408-00043	CLAMP	1	
34	09408-00121	CLAMP	1	
35	09408-00145	CLIP	1	

FIG.143T

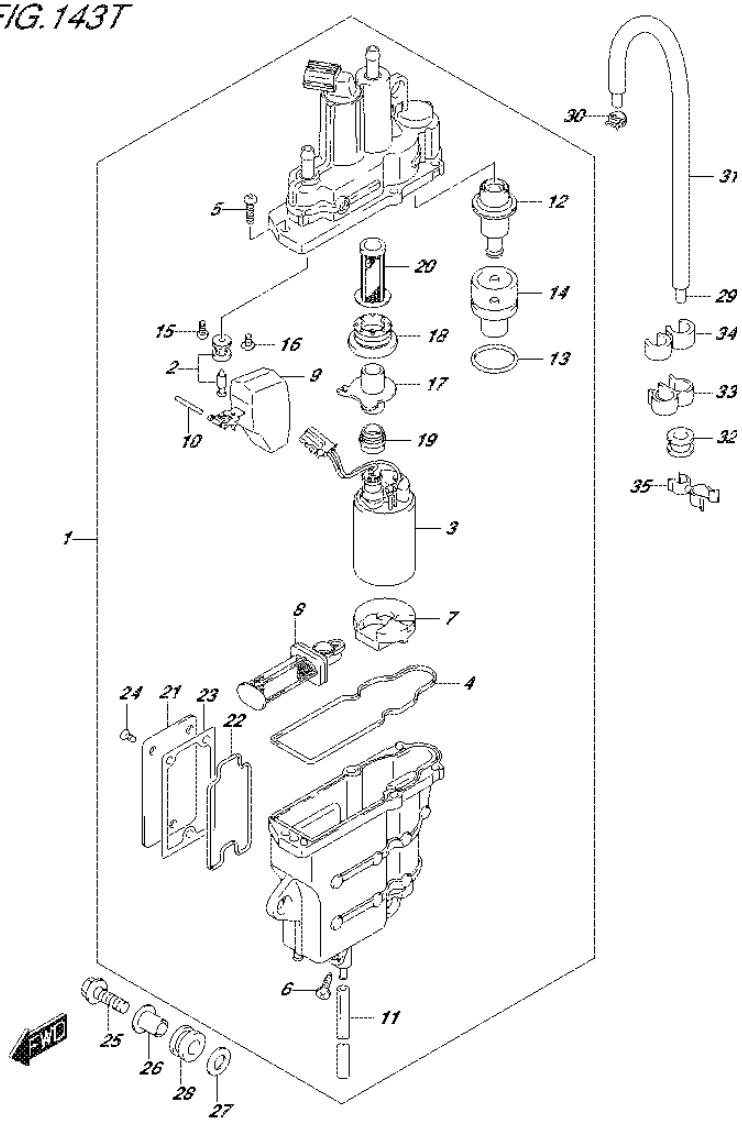

FIG.143T (1-F-4) FUEL VAPOR SEPARATOR (DF60AVTH E01)

REF NO.	PART NO.	DESCRIPTION	Q'TY	REMARKS
1	15600-88L02	SEPARATOR ASSY, FUEL VAPOR	1	
2	13370-88L00	.VALVE ASSY, NEEDLE	1	
3	15200-88L00	.PUMP ASSY, FUEL	1	
4	15626-88L00	.SEAL	1	
5	15628-99E00	.SCREW (L:15)	5	
6	15629-99E10	.SCREW, DRAIN	1	
7	15641-88L00	.SPACER	1	
8	15642-88L00	.FILTER ASSY	1	
9	15650-99E00	.FLOAT	1	
10	15654-88L00	.PIN	1	
11	15683-87J00	.HOSE, DRAIN (L:120)	1	
12	15760-88L00	.REGULATOR ASSY	1	
13	15644-88L00	.O RING	1	
14	15645-88L00	.HOLDER, REGULATOR	1	
15	02112-0408A	.SCREW	1	
16	02142-0408B	.SCREW	1	
17	15643-88L00	.JOINT	1	
18	15641-88L20	.BUSH	1	
19	15641-88L40	.BUSH	1	
20	15642-88L10	.FILTER	1	
21	15612-88L00	.COVER	1	
22	15613-88L00	.O RING	1	
23	15613-92J00	.GASKET	1	
24	15614-88L00	.SCREW	3	
25	01550-06307	BOLT	3	
26	09169-06075	WASHER	3	
27	09160-06084	WASHER (6.5X18X1.6)	3	
28	09320-09039	CUSHION	3	
29	09352-50823-00B	HOSE (5X8.2X2000)	1	L:2000->770
30	09401-08412	CLIP	1	
31	18498-88L10	PROTECTOR, EVAP HOSE (L:730)	1	
32	09320-08076	GROMMET	1	
33	09408-00043	CLAMP	1	
34	09408-00121	CLAMP	1	
35	09408-00145	CLIP	1	

FIG.143U

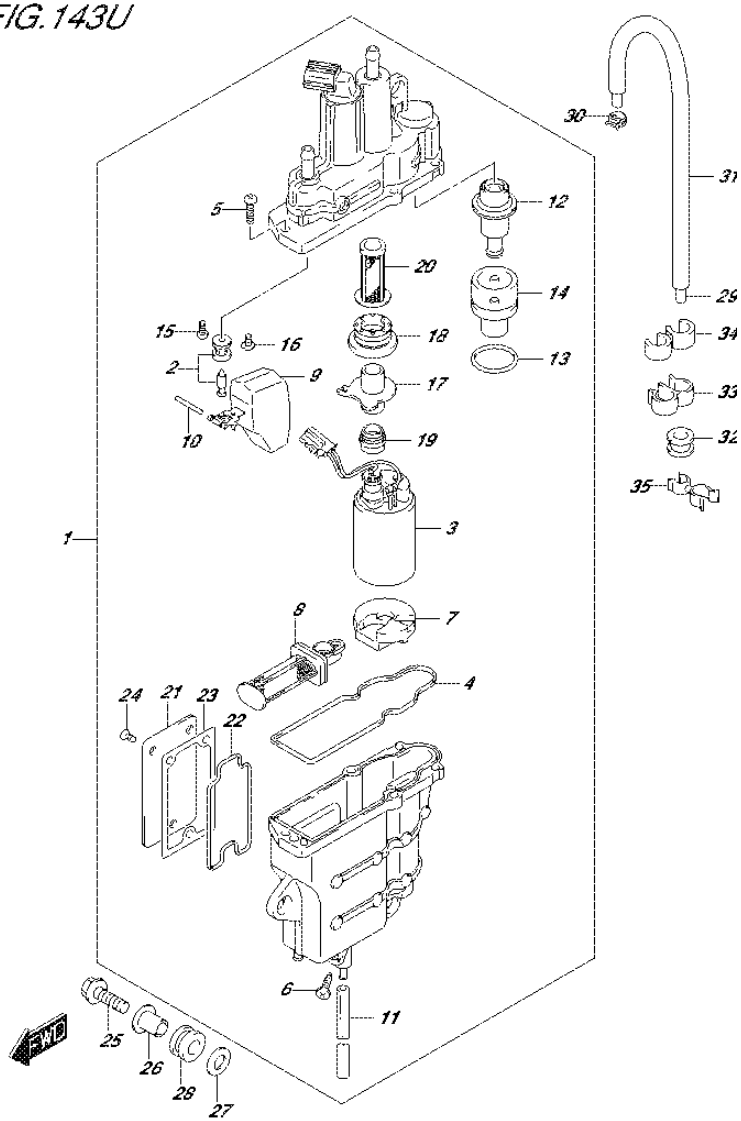

FIG.143U (1-F-5) FUEL VAPOR SEPARATOR (DF60AVTH E40)

REF NO.	PART NO.	DESCRIPTION	Q'TY	REMARKS
1	15600-88L13	SEPARATOR ASSY, FUEL VAPOR	1	
2	13370-88L10	.VALVE ASSY, NEEDLE	1	
3	15200-88L10	.PUMP ASSY, FUEL	1	
4	15626-88L10	.SEAL	1	
5	15628-99E00	.SCREW (L:15)	5	
6	15629-99E10	.SCREW, DRAIN	1	
7	15641-88L10	.SPACER	1	
8	15642-88L00	.FILTER ASSY	1	
9	15650-99E00	.FLOAT	1	
10	15654-88L00	.PIN	1	
11	15683-87J00	.HOSE, DRAIN (L:120)	1	
12	15760-88L00	.REGULATOR ASSY	1	
13	15644-88L10	.O RING	1	
14	15645-88L00	.HOLDER, REGULATOR	1	
15	13614-89J00	.SCREW	1	
16	13614-93J00	.SCREW	1	
17	15643-88L00	.JOINT	1	
18	15641-88L31	.BUSH	1	
19	15641-88L51	.BUSH	1	
20	15642-88L10	.FILTER	1	
21	15612-88L00	.COVER	1	
22	15613-88L00	.O RING	1	
23	15613-92J00	.GASKET	1	
24	15614-88L00	.SCREW	3	
25	01550-06307	BOLT	3	
26	09169-06075	WASHER	3	
27	09160-06084	WASHER (6.5X18X1.6)	3	
28	09320-09039	CUSHION	3	
29	09352-50823-00B	HOSE (5X8.2X2000)	1	L:2000->770
30	09401-08412	CLIP	1	
31	18498-88L10	PROTECTOR, EVAP HOSE (L:730)	1	
32	09320-08076	GROMMET	1	
33	09408-00043	CLAMP	1	
34	09408-00121	CLAMP	1	
35	09408-00145	CLIP	1	

FIG.144A

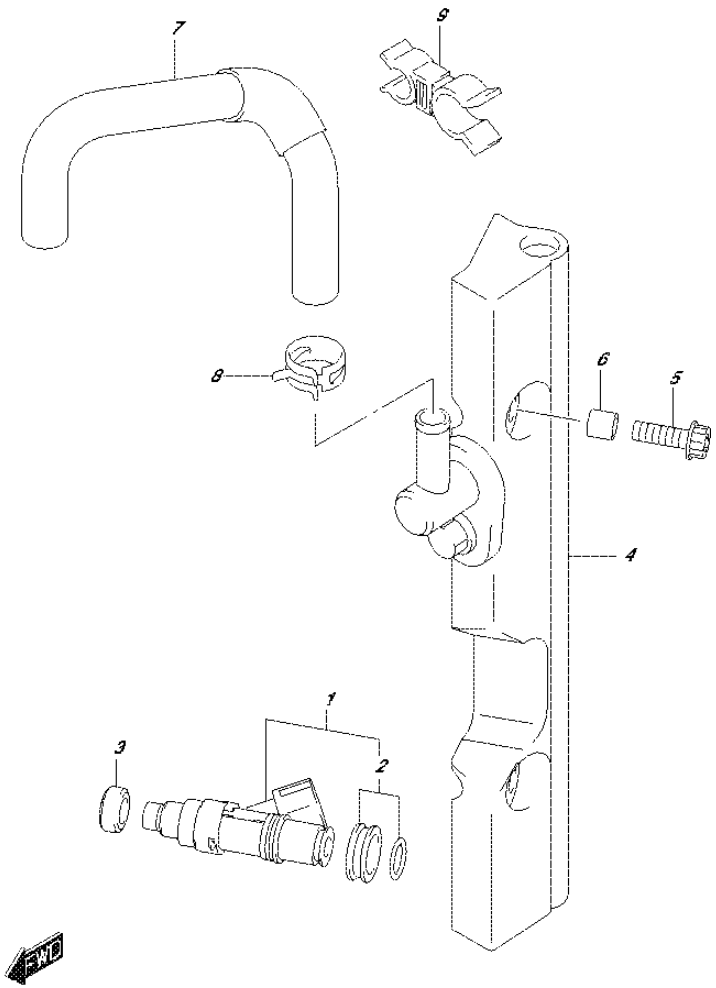

FIG.144A (1-F-6) FUEL INJECTOR (DF40A E01)

REF NO.	PART NO.	DESCRIPTION	Q'TY	REMARKS
1	15710-85K00	INJECTOR ASSY, FUEL	3	
2	15716-65DT0	.GROMMET SET	3	
3	09320-08062	CUSHION	3	
4	15750-88L10	PIPE, DELIVERY	1	
5	07120-06357	BOLT	2	
6	09180-06198	SPACER (6.2X12X16)	2	
7	15681-88L10	HOSE (SEPARATOR TO DLVY)	1	
8	09401-11425	CLIP	2	
9	09408-00174	CLAMP	1	

FIG.144B

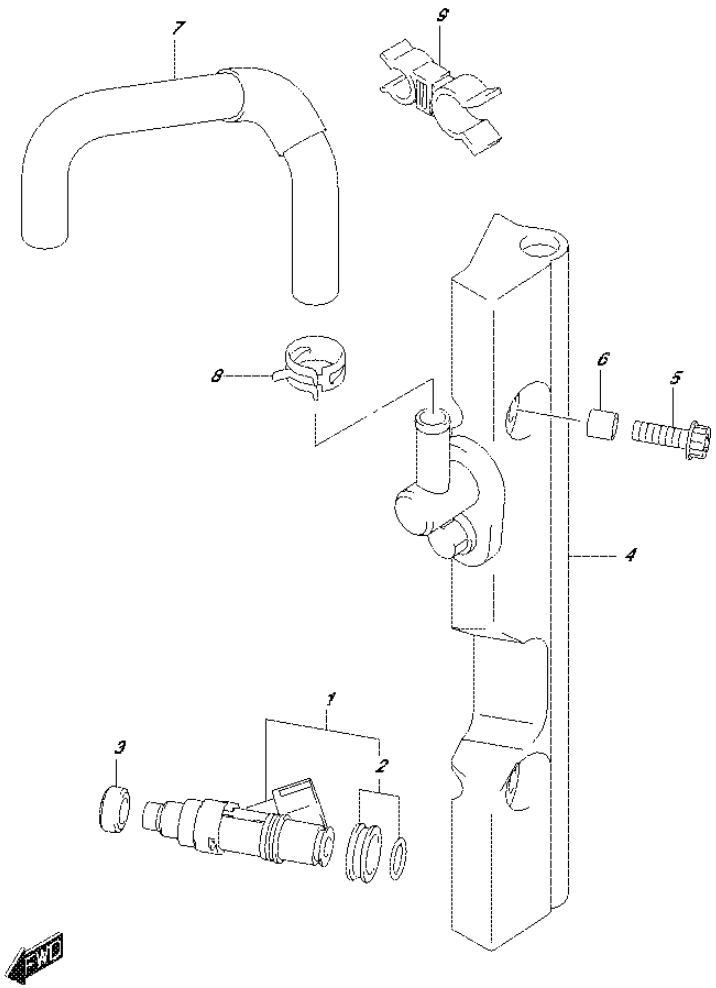

FIG.144B (1-F-7) FUEL INJECTOR (DF40AQH E01)

REF NO.	PART NO.	DESCRIPTION	Q'TY	REMARKS
1	15710-85K00	INJECTOR ASSY, FUEL	3	
2	15716-65DT0	.GROMMET SET	3	
3	09320-08062	CUSHION	3	
4	15750-88L10	PIPE, DELIVERY	1	
5	07120-06357	BOLT	2	
6	09180-06198	SPACER (6.2X12X16)	2	
7	15681-88L10	HOSE (SEPARATOR TO DLVY)	1	
8	09401-11425	CLIP	2	
9	09408-00174	CLAMP	1	

DF60A_E01_016_144B
FUEL INJECTOR

FIG.144C

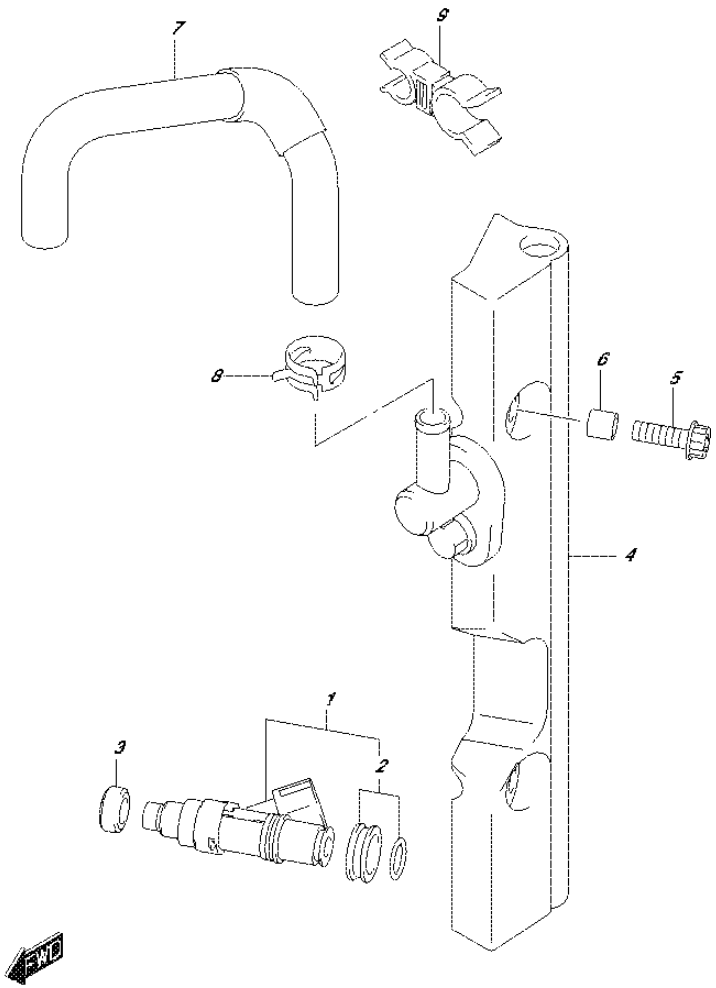

FIG.144C (1-F-8) FUEL INJECTOR (DF40ATH E01)

REF NO.	PART NO.	DESCRIPTION	Q'TY	REMARKS
1	15710-85K00	INJECTOR ASSY, FUEL	3	
2	15716-65DT0	.GROMMET SET	3	
3	09320-08062	CUSHION	3	
4	15750-88L10	PIPE, DELIVERY	1	
5	07120-06357	BOLT	2	
6	09180-06198	SPACER (6.2X12X16)	2	
7	15681-88L10	HOSE (SEPARATOR TO DLVY)	1	
8	09401-11425	CLIP	2	
9	09408-00174	CLAMP	1	

DF60A_E01_016_144C
FUEL INJECTOR

FIG.144D

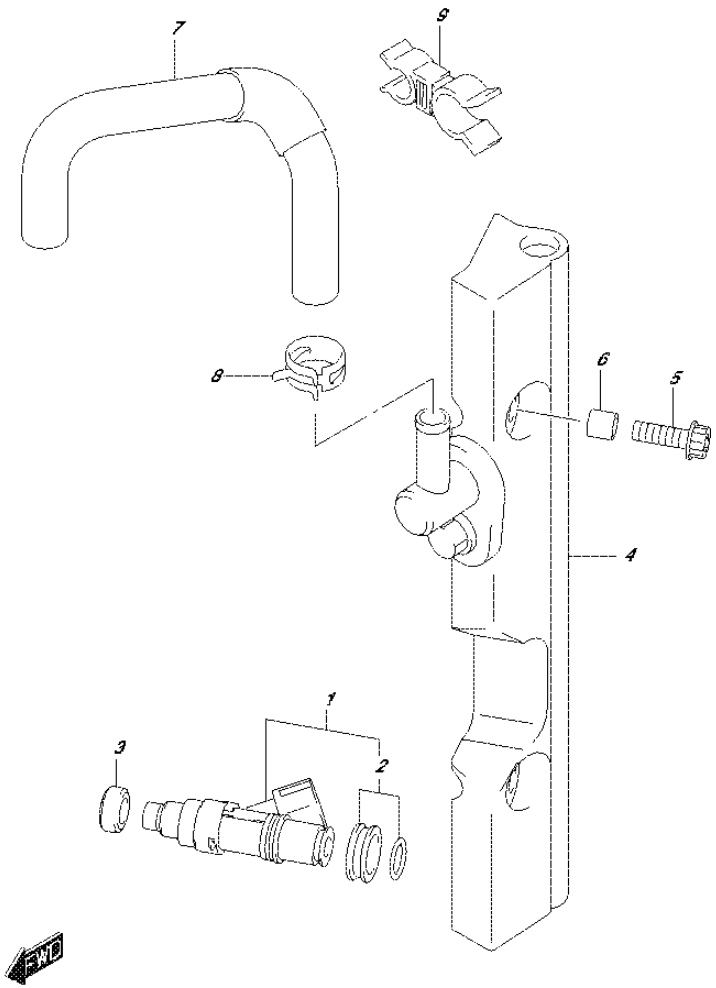

FIG.144D (1-F-9) FUEL INJECTOR (DF40AST E34)

REF NO.	PART NO.	DESCRIPTION	Q'TY	REMARKS
1	15710-85K00	INJECTOR ASSY, FUEL	3	
2	15716-65DT0	.GROMMET SET	3	
3	09320-08062	CUSHION	3	
4	15750-88L10	PIPE, DELIVERY	1	
5	07120-06357	BOLT	2	
6	09180-06198	SPACER (6.2X12X16)	2	
7	15681-88L10	HOSE (SEPARATOR TO DLVY)	1	
8	09401-11425	CLIP	2	
9	09408-00174	CLAMP	1	

DF60A_E01_016_144D
FUEL INJECTOR

FIG.144E

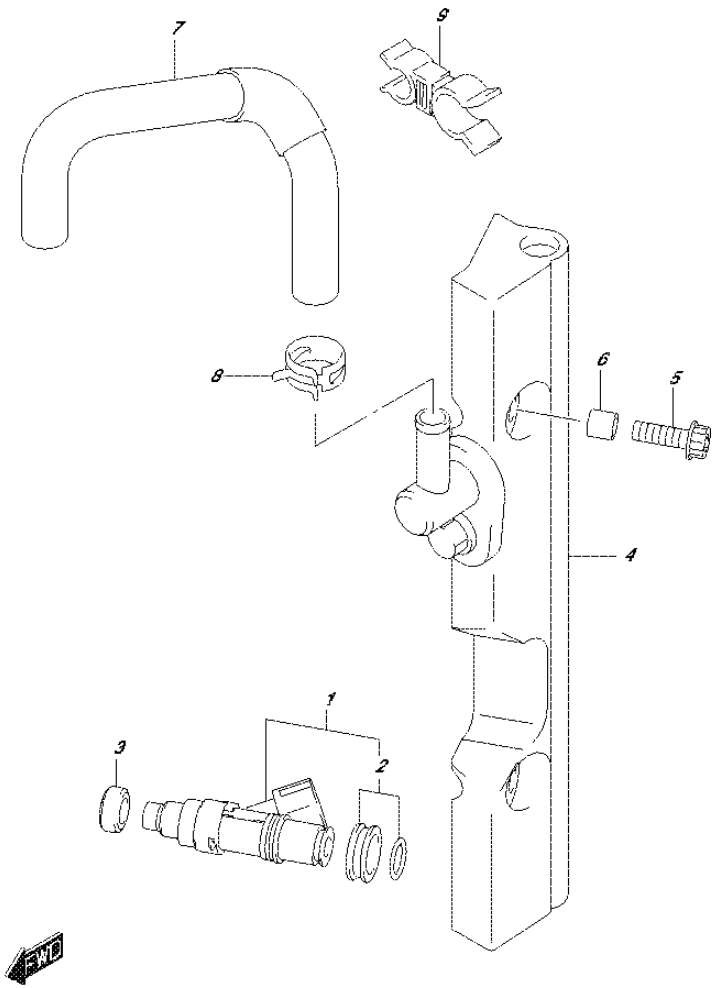

FIG.144E (1-F-10) FUEL INJECTOR (DF50A E01)

REF NO.	PART NO.	DESCRIPTION	Q'TY	REMARKS
1	15710-85K00	INJECTOR ASSY, FUEL	3	
2	15716-65DT0	.GROMMET SET	3	
3	09320-08062	CUSHION	3	
4	15750-88L10	PIPE, DELIVERY	1	
5	07120-06357	BOLT	2	
6	09180-06198	SPACER (6.2X12X16)	2	
7	15681-88L10	HOSE (SEPARATOR TO DLVY)	1	
8	09401-11425	CLIP	2	
9	09408-00174	CLAMP	1	

FIG.144F

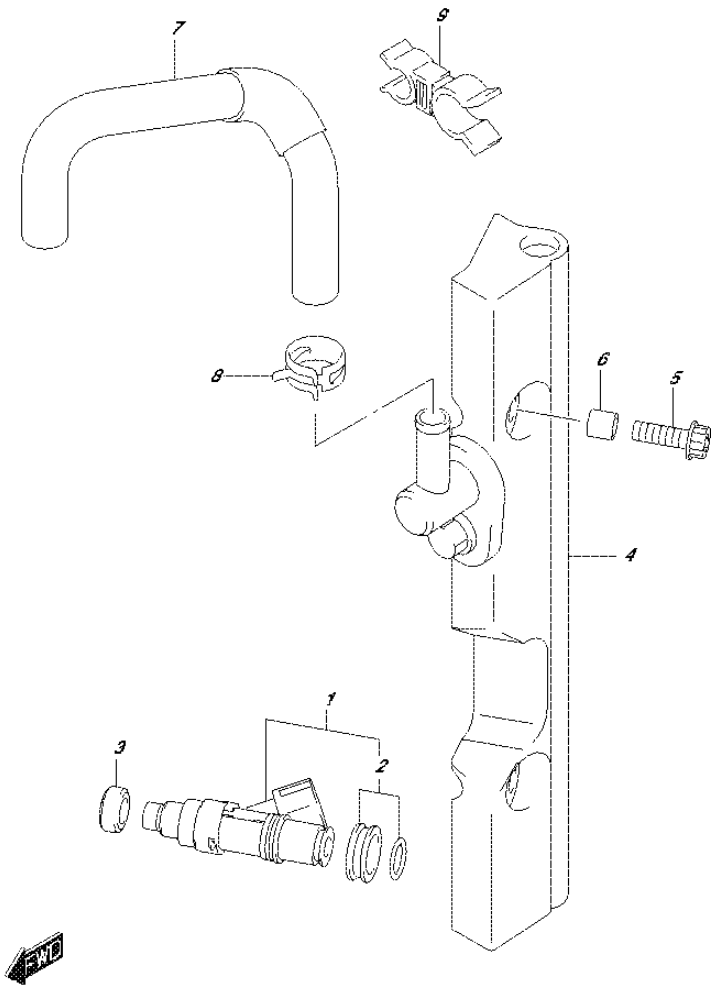

FIG.144F (1-F-11) FUEL INJECTOR (DF50ATH E01)

REF NO.	PART NO.	DESCRIPTION	Q'TY	REMARKS
1	15710-85K00	INJECTOR ASSY, FUEL	3	
2	15716-65DT0	.GROMMET SET	3	
3	09320-08062	CUSHION	3	
4	15750-88L10	PIPE, DELIVERY	1	
5	07120-06357	BOLT	2	
6	09180-06198	SPACER (6.2X12X16)	2	
7	15681-88L10	HOSE (SEPARATOR TO DLVY)	1	
8	09401-11425	CLIP	2	
9	09408-00174	CLAMP	1	

FIG.144G

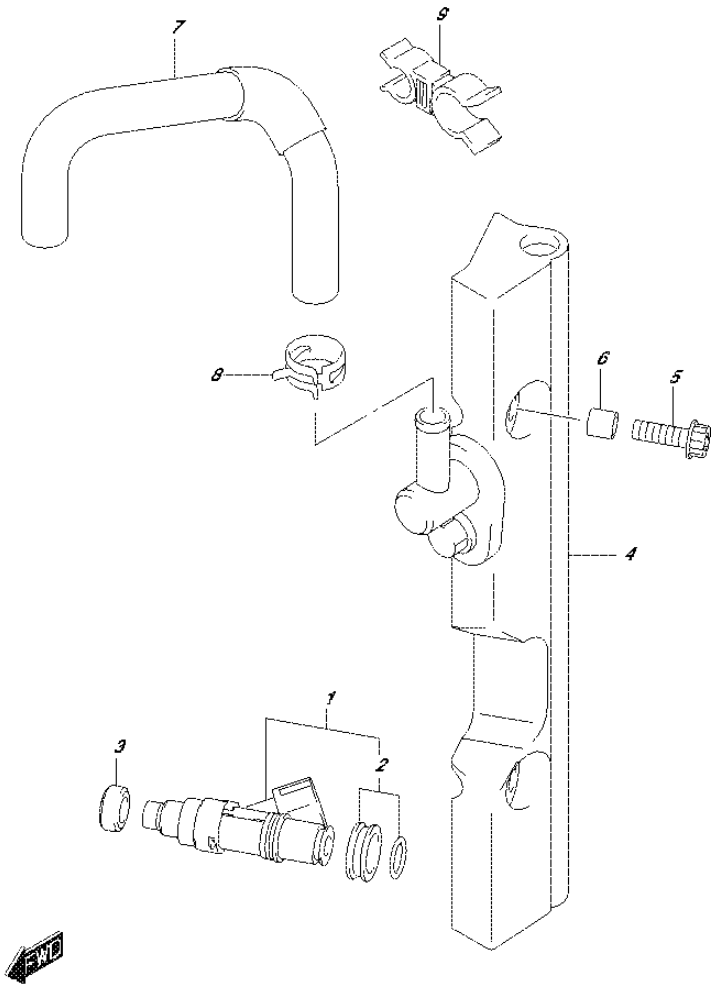

FIG.144G (1-F-12) FUEL INJECTOR (DF60A E01)

REF NO.	PART NO.	DESCRIPTION	Q'TY	REMARKS
1	15710-85K00	INJECTOR ASSY, FUEL	3	
2	15716-65DT0	.GROMMET SET	3	
3	09320-08062	CUSHION	3	
4	15750-88L10	PIPE, DELIVERY	1	
5	07120-06357	BOLT	2	
6	09180-06198	SPACER (6.2X12X16)	2	
7	15681-88L10	HOSE (SEPARATOR TO DLVY)	1	
8	09401-11425	CLIP	2	
9	09408-00174	CLAMP	1	

FIG.144H

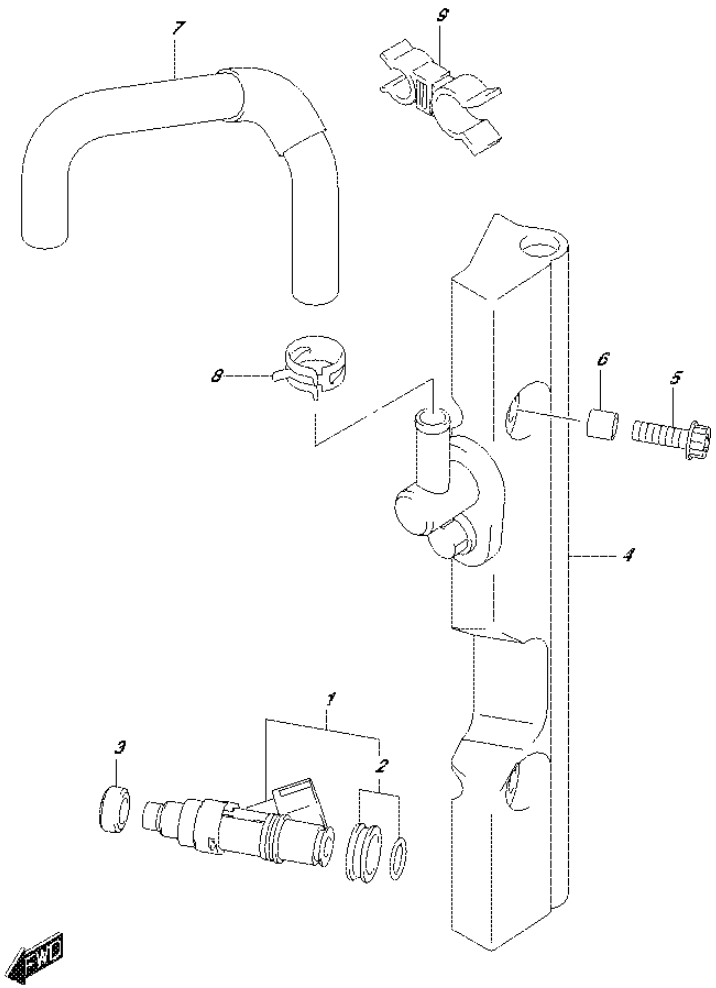

FIG.144H (1-F-13) FUEL INJECTOR (DF60A E40)

REF NO.	PART NO.	DESCRIPTION	Q'TY	REMARKS
1	15710-85K00	INJECTOR ASSY, FUEL	3	
2	15716-65DT0	.GROMMET SET	3	
3	09320-08062	CUSHION	3	
4	15750-88L20	PIPE, DELIVERY	1	
5	07120-06357	BOLT	2	
6	09180-06198	SPACER (6.2X12X16)	2	
7	15681-88L10	HOSE (SEPARATOR TO DLVY)	1	
8	09401-11425	CLIP	2	
9	09408-00174	CLAMP	1	

FIG.144J

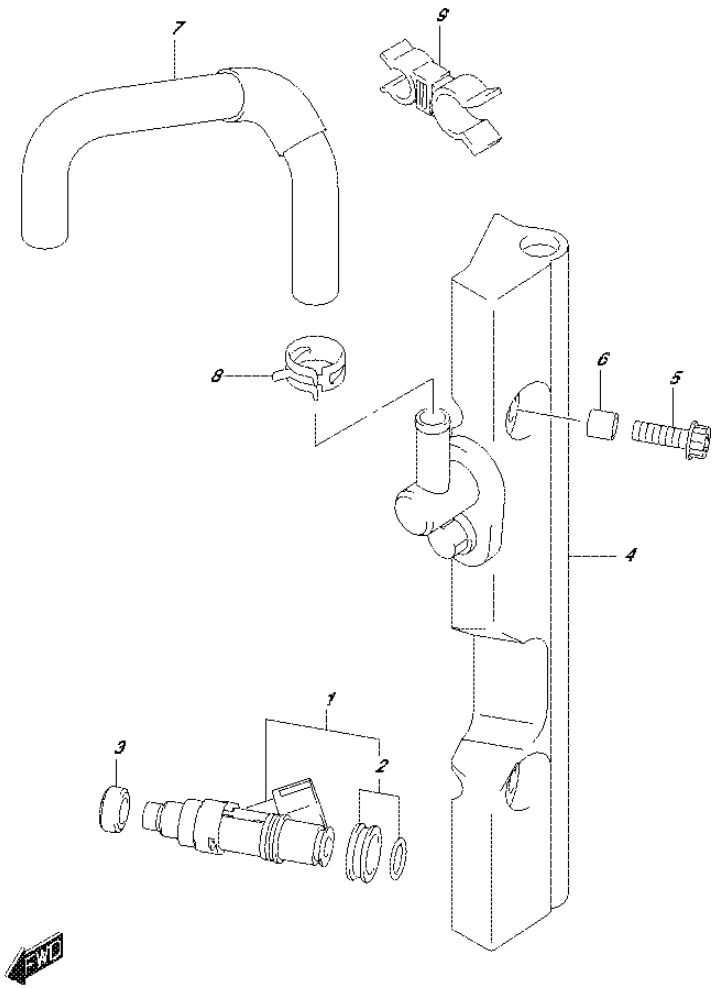

FIG.144J (1-F-14) FUEL INJECTOR (DF60AQH E01)

REF NO.	PART NO.	DESCRIPTION	Q'TY	REMARKS
1	15710-85K00	INJECTOR ASSY, FUEL	3	
2	15716-65DT0	.GROMMET SET	3	
3	09320-08062	CUSHION	3	
4	15750-88L10	PIPE, DELIVERY	1	
5	07120-06357	BOLT	2	
6	09180-06198	SPACER (6.2X12X16)	2	
7	15681-88L10	HOSE (SEPARATOR TO DLVY)	1	
8	09401-11425	CLIP	2	
9	09408-00174	CLAMP	1	

DF60A_E01_016_144J
FUEL INJECTOR

FIG.144K

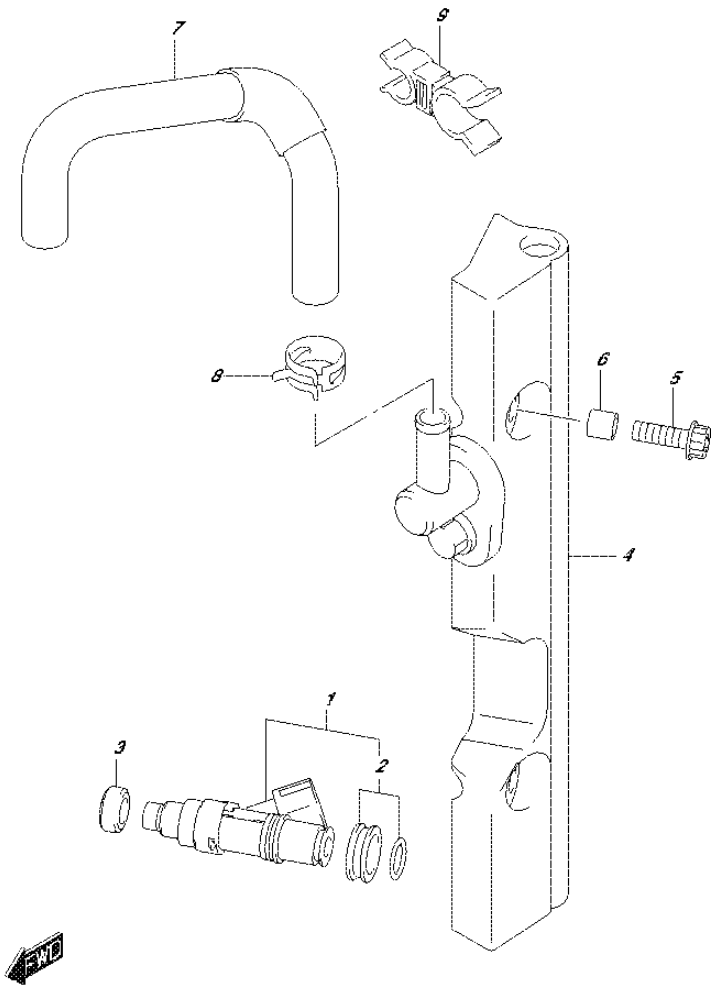

FIG.144K (1-F-15) FUEL INJECTOR (DF60AQH E40)

REF NO.	PART NO.	DESCRIPTION	Q'TY	REMARKS
1	15710-85K00	INJECTOR ASSY, FUEL	3	
2	15716-65DT0	.GROMMET SET	3	
3	09320-08062	CUSHION	3	
4	15750-88L20	PIPE, DELIVERY	1	
5	07120-06357	BOLT	2	
6	09180-06198	SPACER (6.2X12X16)	2	
7	15681-88L10	HOSE (SEPARATOR TO DLVY)	1	
8	09401-11425	CLIP	2	
9	09408-00174	CLAMP	1	

FIG.144L

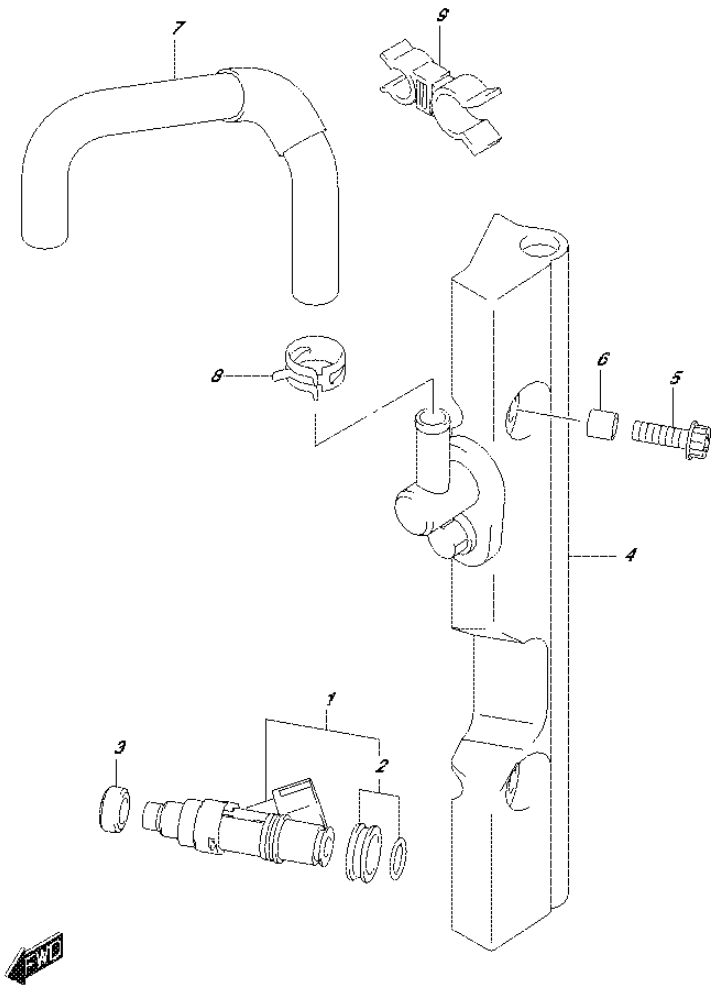

FIG.144L (1-G-2) FUEL INJECTOR (DF60ATH E01)

REF NO.	PART NO.	DESCRIPTION	Q'TY	REMARKS
1	15710-85K00	INJECTOR ASSY, FUEL	3	
2	15716-65DT0	.GROMMET SET	3	
3	09320-08062	CUSHION	3	
4	15750-88L10	PIPE, DELIVERY	1	
5	07120-06357	BOLT	2	
6	09180-06198	SPACER (6.2X12X16)	2	
7	15681-88L10	HOSE (SEPARATOR TO DLVY)	1	
8	09401-11425	CLIP	2	
9	09408-00174	CLAMP	1	

DF60A_E01_016_144L
FUEL INJECTOR

FIG.144M

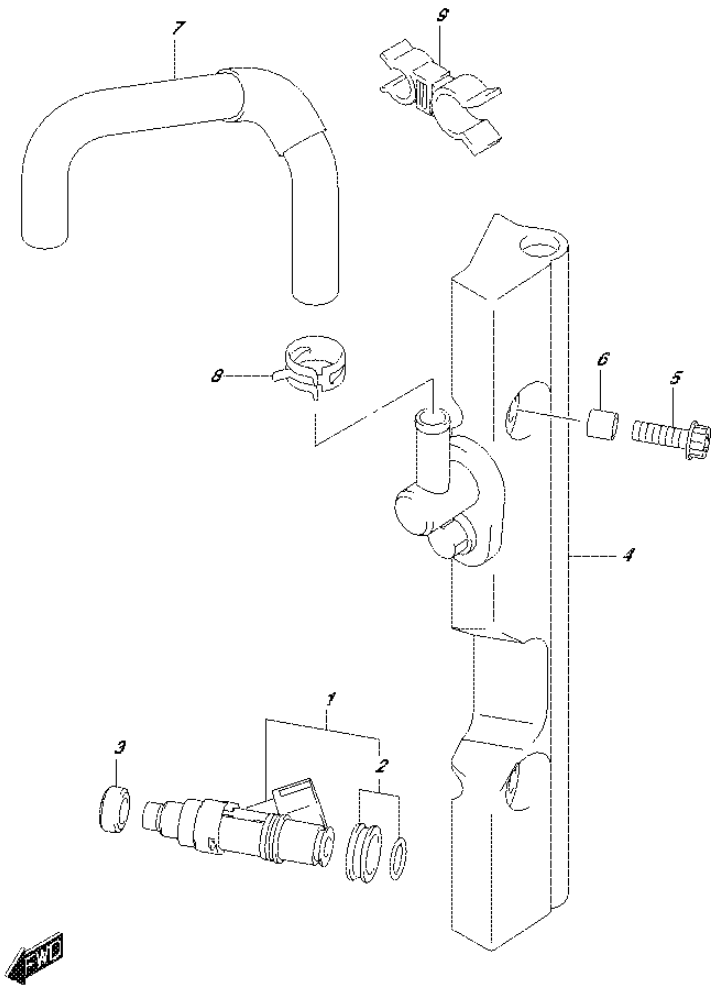

FIG.144M (1-G-3) FUEL INJECTOR (DF60ATH E40)

REF NO.	PART NO.	DESCRIPTION	Q'TY	REMARKS
1	15710-85K00	INJECTOR ASSY, FUEL	3	
2	15716-65DT0	.GROMMET SET	3	
3	09320-08062	CUSHION	3	
4	15750-88L20	PIPE, DELIVERY	1	
5	07120-06357	BOLT	2	
6	09180-06198	SPACER (6.2X12X16)	2	
7	15681-88L10	HOSE (SEPARATOR TO DLVY)	1	
8	09401-11425	CLIP	2	
9	09408-00174	CLAMP	1	

FIG.144N

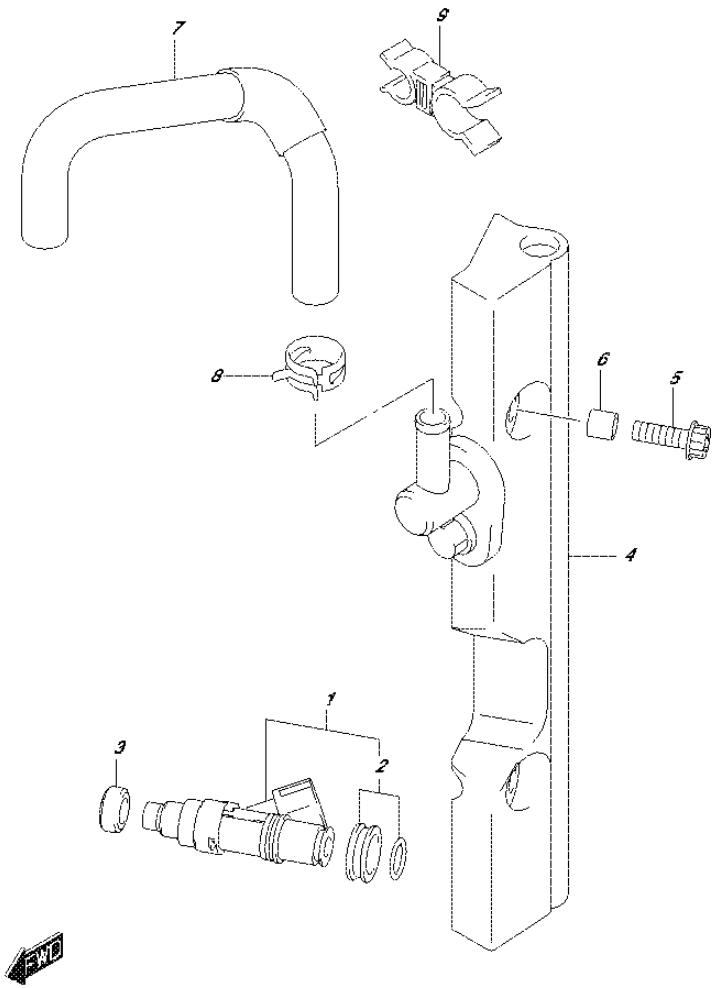

FIG.144N (1-G-4) FUEL INJECTOR (DF50AVT E01)

REF NO.	PART NO.	DESCRIPTION	Q'TY	REMARKS
1	15710-85K00	INJECTOR ASSY, FUEL	3	
2	15716-65DT0	.GROMMET SET	3	
3	09320-08062	CUSHION	3	
4	15750-88L10	PIPE, DELIVERY	1	
5	07120-06357	BOLT	2	
6	09180-06198	SPACER (6.2X12X16)	2	
7	15681-88L10	HOSE (SEPARATOR TO DLVY)	1	
8	09401-11425	CLIP	2	
9	09408-00174	CLAMP	1	

FIG.144P

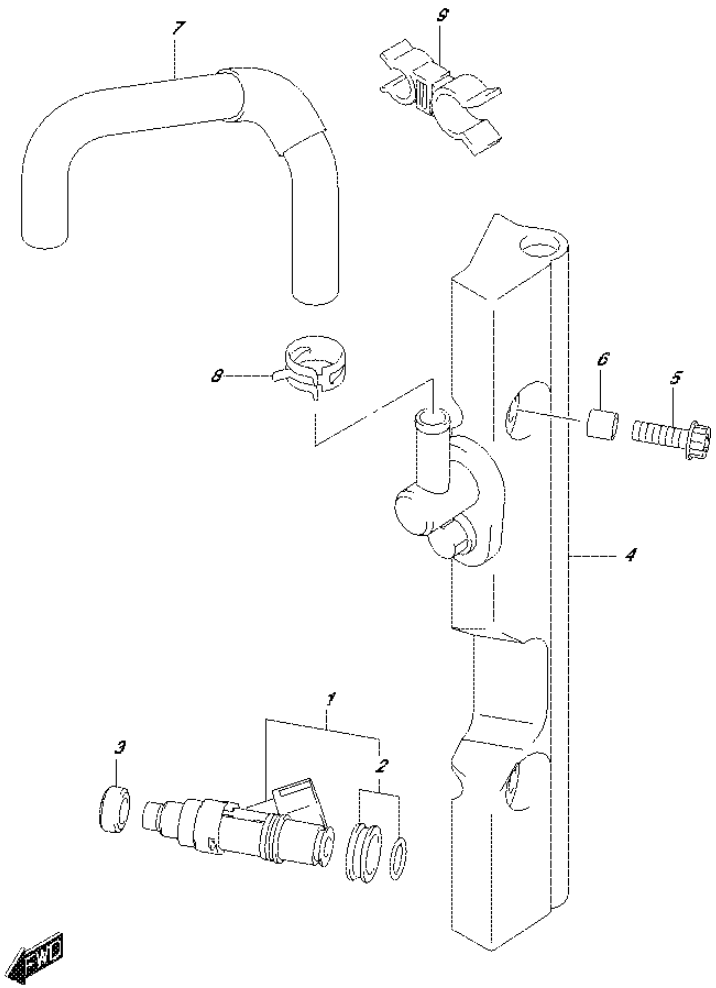

FIG.144P (1-G-5) FUEL INJECTOR (DF50AVTH E01)

REF NO.	PART NO.	DESCRIPTION	Q'TY	REMARKS
1	15710-85K00	INJECTOR ASSY, FUEL	3	
2	15716-65DT0	.GROMMET SET	3	
3	09320-08062	CUSHION	3	
4	15750-88L10	PIPE, DELIVERY	1	
5	07120-06357	BOLT	2	
6	09180-06198	SPACER (6.2X12X16)	2	
7	15681-88L10	HOSE (SEPARATOR TO DLVY)	1	
8	09401-11425	CLIP	2	
9	09408-00174	CLAMP	1	

FIG.144R

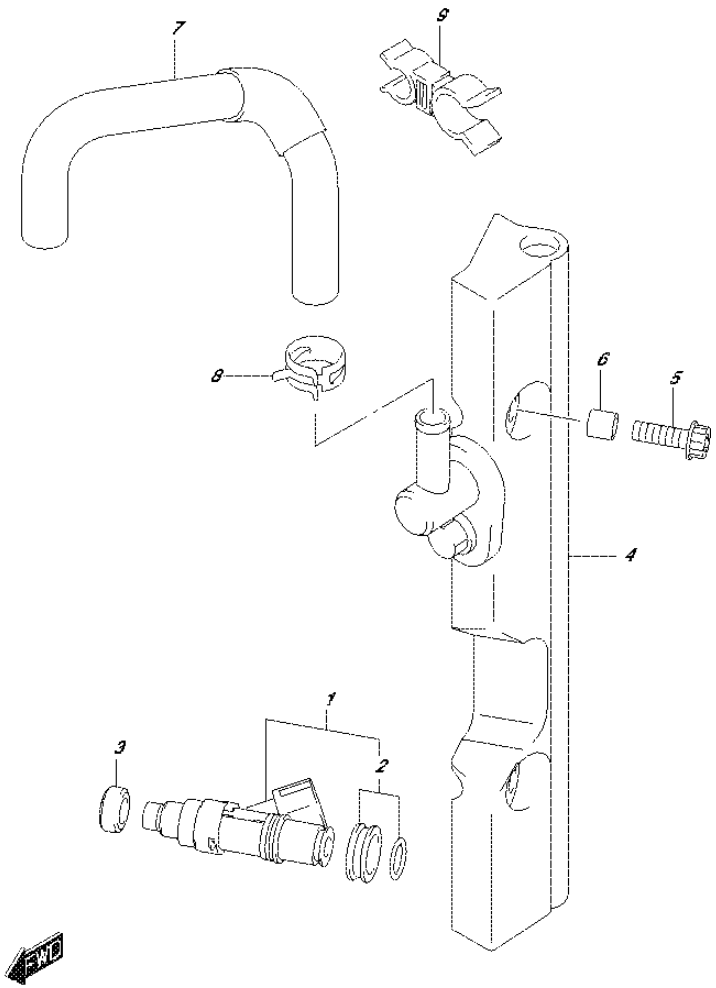

FIG.144R (1-G-6) FUEL INJECTOR (DF60AVT E01)

REF NO.	PART NO.	DESCRIPTION	Q'TY	REMARKS
1	15710-85K00	INJECTOR ASSY, FUEL	3	
2	15716-65DT0	.GROMMET SET	3	
3	09320-08062	CUSHION	3	
4	15750-88L10	PIPE, DELIVERY	1	
5	07120-06357	BOLT	2	
6	09180-06198	SPACER (6.2X12X16)	2	
7	15681-88L10	HOSE (SEPARATOR TO DLVY)	1	
8	09401-11425	CLIP	2	
9	09408-00174	CLAMP	1	

FIG.144S

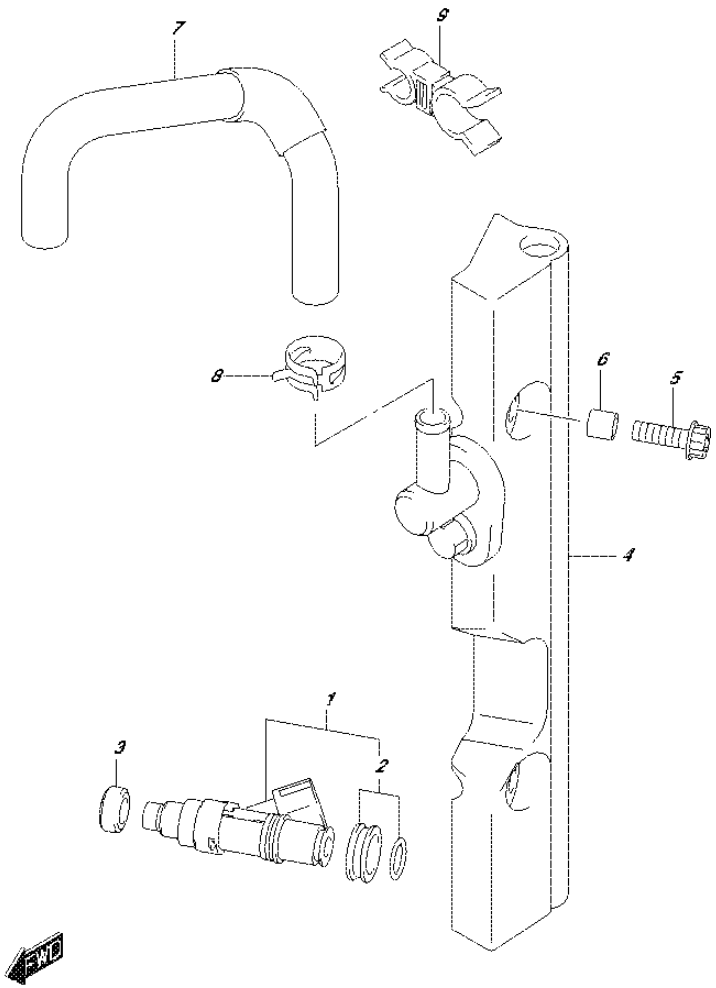

FIG.144S (1-G-7) FUEL INJECTOR (DF60AVT E40)

REF NO.	PART NO.	DESCRIPTION	Q'TY	REMARKS
1	15710-85K00	INJECTOR ASSY, FUEL	3	
2	15716-65DT0	.GROMMET SET	3	
3	09320-08062	CUSHION	3	
4	15750-88L20	PIPE, DELIVERY	1	
5	07120-06357	BOLT	2	
6	09180-06198	SPACER (6.2X12X16)	2	
7	15681-88L10	HOSE (SEPARATOR TO DLVY)	1	
8	09401-11425	CLIP	2	
9	09408-00174	CLAMP	1	

FIG.144T

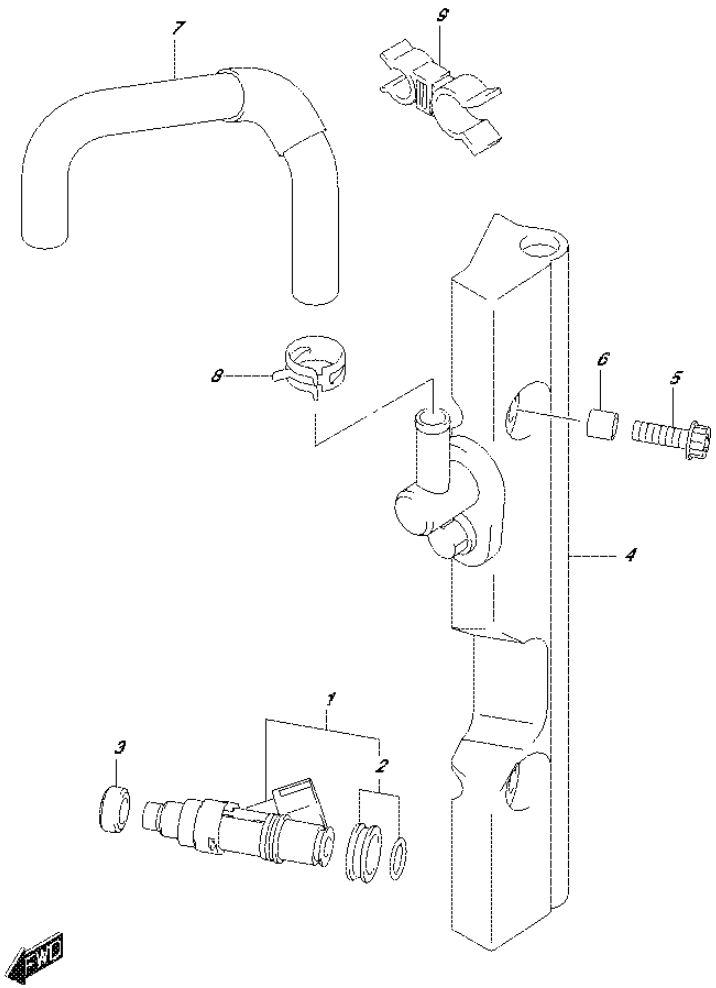

FIG.144T (1-G-8) FUEL INJECTOR (DF60AVTH E01)

REF NO.	PART NO.	DESCRIPTION	Q'TY	REMARKS
1	15710-85K00	INJECTOR ASSY, FUEL	3	
2	15716-65DT0	.GROMMET SET	3	
3	09320-08062	CUSHION	3	
4	15750-88L10	PIPE, DELIVERY	1	
5	07120-06357	BOLT	2	
6	09180-06198	SPACER (6.2X12X16)	2	
7	15681-88L10	HOSE (SEPARATOR TO DLVY)	1	
8	09401-11425	CLIP	2	
9	09408-00174	CLAMP	1	

FIG.144U

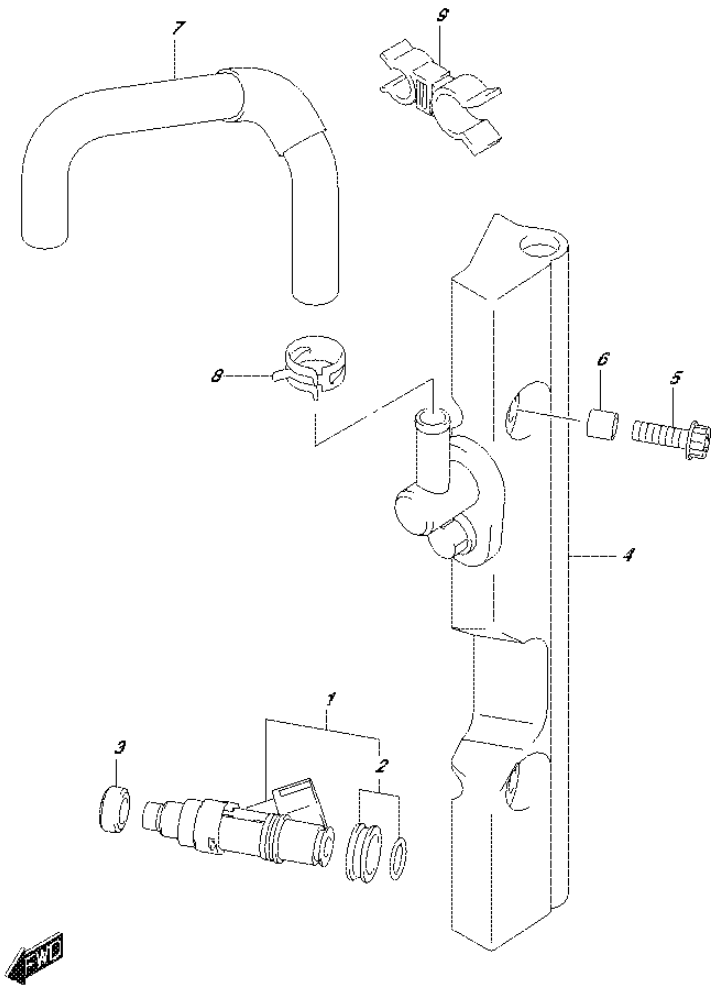

FIG.144U (1-G-9) FUEL INJECTOR (DF60AVTH E40)

REF NO.	PART NO.	DESCRIPTION	Q'TY	REMARKS
1	15710-85K00	INJECTOR ASSY, FUEL	3	
2	15716-65DT0	.GROMMET SET	3	
3	09320-08062	CUSHION	3	
4	15750-88L20	PIPE, DELIVERY	1	
5	07120-06357	BOLT	2	
6	09180-06198	SPACER (6.2X12X16)	2	
7	15681-88L10	HOSE (SEPARATOR TO DLVY)	1	
8	09401-11425	CLIP	2	
9	09408-00174	CLAMP	1	

FIG.146A

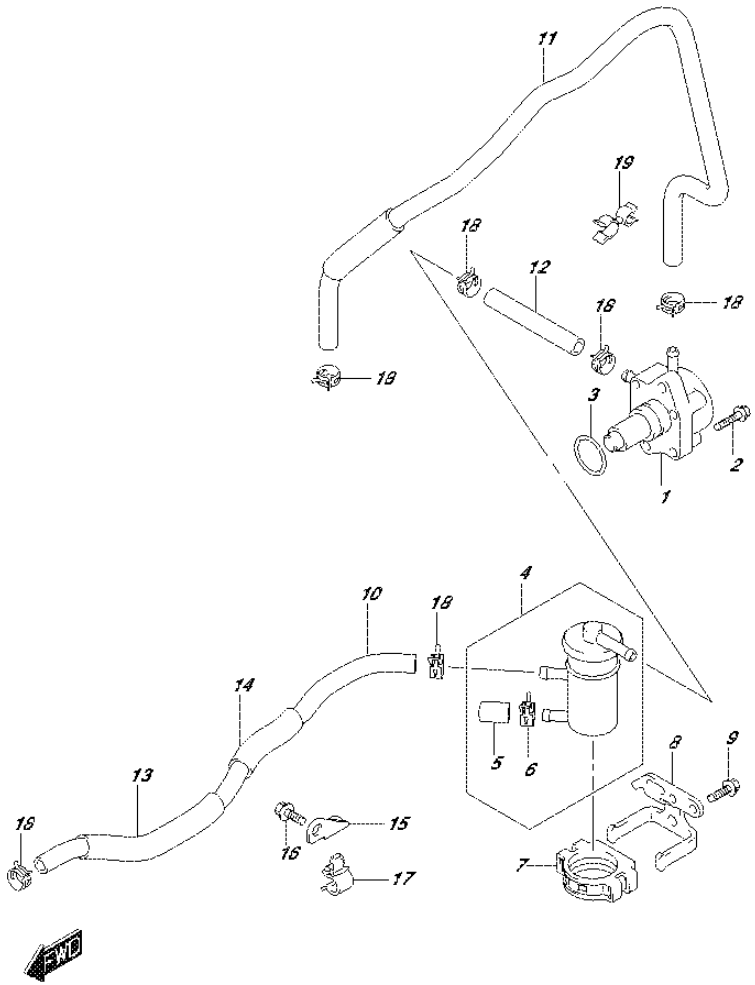

FIG.146A (1-G-10) FUEL PUMP

REF NO.	PART NO.	DESCRIPTION	Q'TY	REMARKS
1	15100-90J11	PUMP ASSY, FUEL	1	
2	01550-06257	BOLT	2	
3	09280-26005	O RING (D:2.4,ID:26.2)	1	
4	15410-88L00	FILTER, FUEL	1	
5	15419-87J00	.CAP, FUEL FILTER	1	
6	09401-11423	.CLIP	1	
7	15422-96J00	CLAMP, FILTER	1	
8	15421-88L00	BRACKET, FUEL FILTER	1	
9	01550-06167	BOLT	2	
10	15191-88L10	HOSE, FUEL (CONN TO FILTER)	1	
11	15192-88L20	HOSE, FUEL (PUMP TO SEPARATOR)	1	
12	09343-70503-080	HOSE (7X12X80)	1	
13	18498-99E10	PROTECTOR, FUEL HOSE NO.1	1	L:610->230
14	18498-96J20	PROTECTOR, FUEL HOSE NO.2	1	L:370->95
15	15197-88L00	BRACKET, FUEL HOSE CLAMP	1	
16	01550-06127	BOLT	1	
17	09403-11320	CLAMP	3	
18	09401-11423	CLIP	5	
19	09408-00145	CLIP	1	

FIG.160A

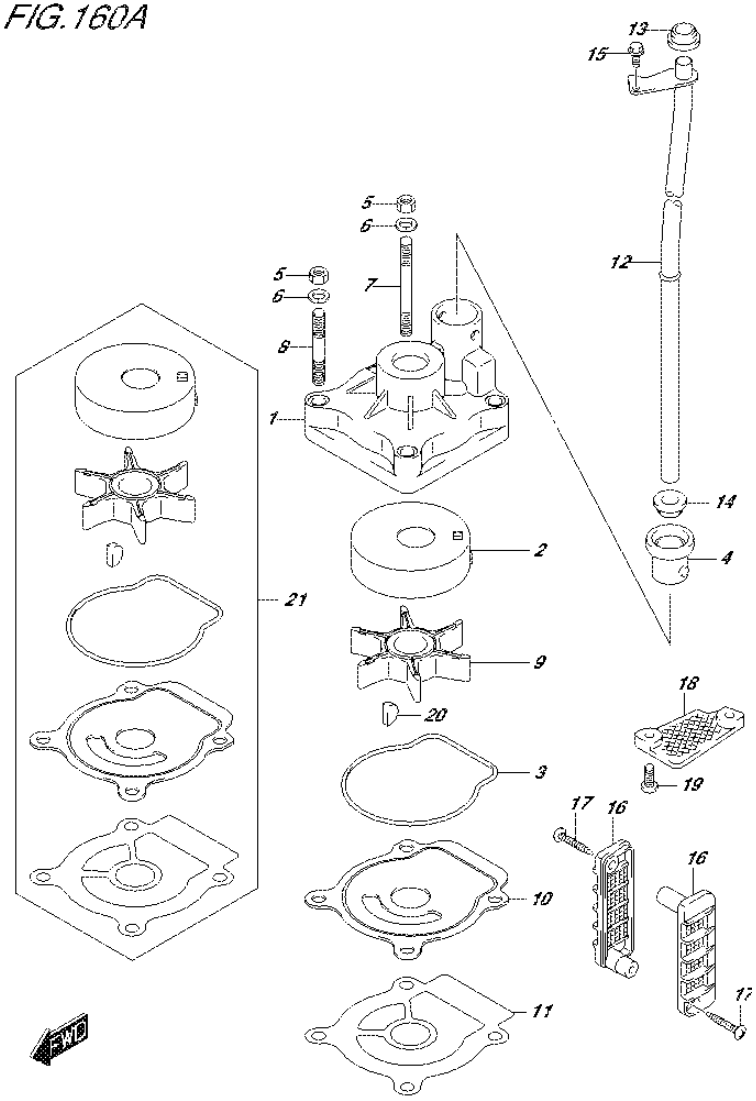

FIG.160A (1-G-11) WATER PUMP (DF40A E01)

REF NO.	PART NO.	DESCRIPTION	Q'TY	REMARKS
1	17410-88L00	CASE, WATER PUMP	1	
2	17413-95J00	SLEEVE, WATER PUMP CASE	1	
3	17416-95J00	SEALING, WATER PUMP CASE	1	
4	17564-88L00	BUSH, WATER PUMP CASE	1	
5	29141-93J00	NUT	4	
6	29162-93J00	WASHER, LOCK	4	
7	09108-06143	STUD BOLT	2	
8	09108-06144	STUD BOLT	2	
9	17461-96312	IMPELLER, WATER PUMP	1	
10	17471-95J01	PANEL, PUMP CASE UNDER	1	
11	17472-96303	GASKET, PUMP CASE UNDER	1	
12-1	17560-88L00	TUBE, WATER (S)	1	W/TRANSOM(S)
12-2	17560-88L10	TUBE, WATER (L)	1	W/TRANSOM(L)
13	17562-87L00	GROMMET, WATER TUBE UPPER	1	
14	17562-87L00	GROMMET, WATER TUBE LOWER	1	W/TRANSOM(L)
15	09116-06236	BOLT (6X16)	1	
16	17631-96320	FILTER, WATER	2	
17	03142-04309	SCREW	2	
18-1	17635-87E00	FILTER, SUB WATER	1	
18-2	17635-87E10	PLATE, GEAR CASE	1	OPT
19	09125-05046	SCREW (5X12)	2	
20	09420-04006	KEY	1	
21	17400-88L00	WATER PUMP REPAIR KIT	1	OPT

FIG.160B

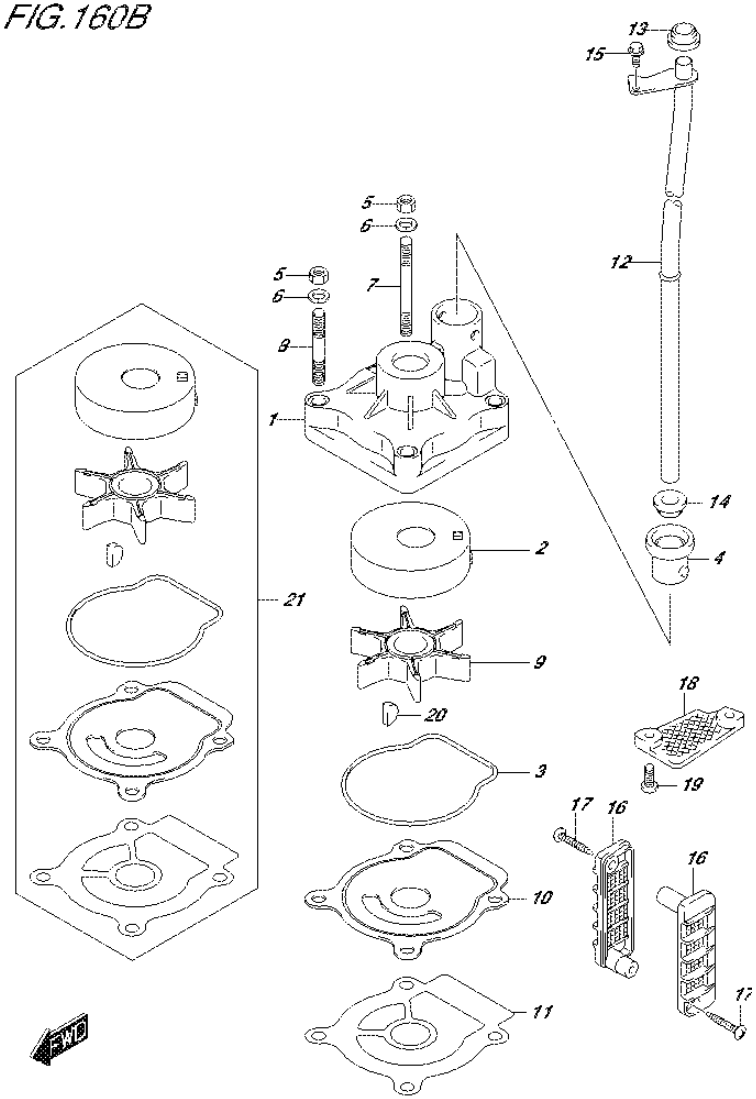

FIG.160B (1-G-12) WATER PUMP (DF40AQH E01)

REF NO.	PART NO.	DESCRIPTION	Q'TY	REMARKS
1	17410-88L00	CASE, WATER PUMP	1	
2	17413-95J00	SLEEVE, WATER PUMP CASE	1	
3	17416-95J00	SEALING, WATER PUMP CASE	1	
4	17564-88L00	BUSH, WATER PUMP CASE	1	
5	29141-93J00	NUT	4	
6	29162-93J00	WASHER, LOCK	4	
7	09108-06143	STUD BOLT	2	
8	09108-06144	STUD BOLT	2	
9	17461-96312	IMPELLER, WATER PUMP	1	
10	17471-95J01	PANEL, PUMP CASE UNDER	1	
11	17472-96303	GASKET, PUMP CASE UNDER	1	
12	17560-88L10	TUBE, WATER (L)	1	
13	17562-87L00	GROMMET, WATER TUBE UPPER	1	
14	17562-87L00	GROMMET, WATER TUBE LOWER	1	
15	09116-06236	BOLT (6X16)	1	
16	17631-96320	FILTER, WATER	2	
17	03142-04309	SCREW	2	
18-1	17635-87E00	FILTER, SUB WATER	1	
18-2	17635-87E10	PLATE, GEAR CASE	1	OPT
19	09125-05046	SCREW (5X12)	2	
20	09420-04006	KEY	1	
21	17400-88L00	WATER PUMP REPAIR KIT	1	OPT

FIG.160C

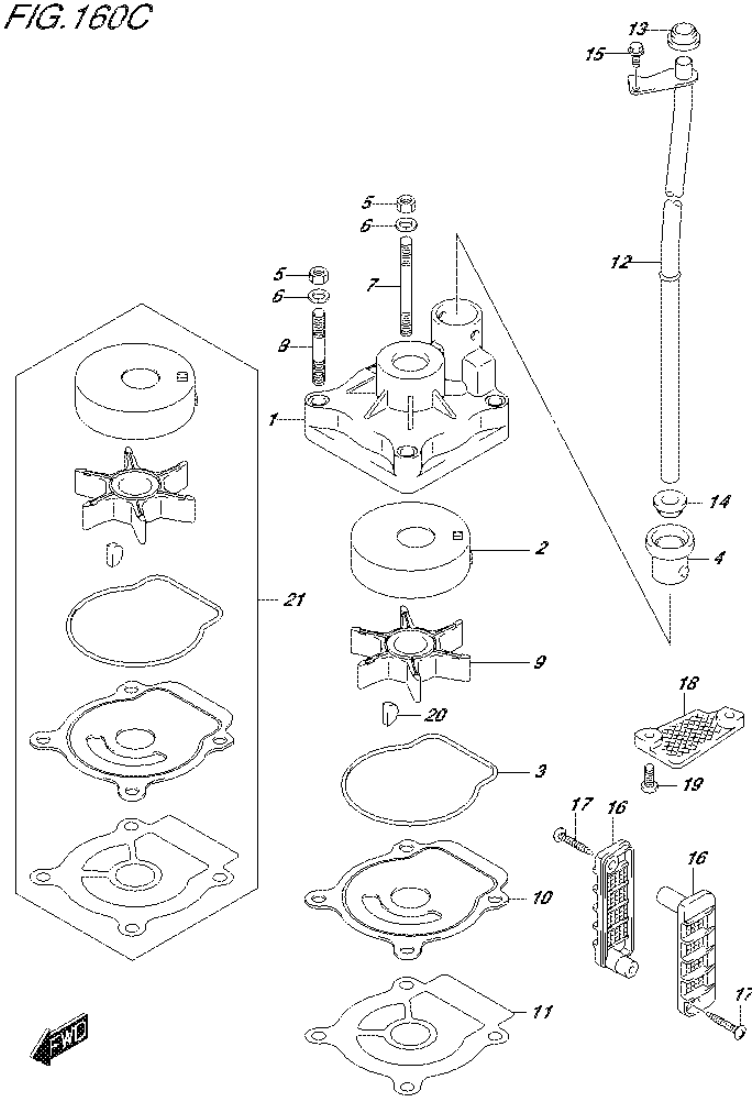

FIG.160C (1-G-13) WATER PUMP (DF40ATH E01)

REF NO.	PART NO.	DESCRIPTION	Q'TY	REMARKS
1	17410-88L00	CASE, WATER PUMP	1	
2	17413-95J00	SLEEVE, WATER PUMP CASE	1	
3	17416-95J00	SEALING, WATER PUMP CASE	1	
4	17564-88L00	BUSH, WATER PUMP CASE	1	
5	29141-93J00	NUT	4	
6	29162-93J00	WASHER, LOCK	4	
7	09108-06143	STUD BOLT	2	
8	09108-06144	STUD BOLT	2	
9	17461-96312	IMPELLER, WATER PUMP	1	
10	17471-95J01	PANEL, PUMP CASE UNDER	1	
11	17472-96303	GASKET, PUMP CASE UNDER	1	
12	17560-88L10	TUBE, WATER (L)	1	
13	17562-87L00	GROMMET, WATER TUBE UPPER	1	
14	17562-87L00	GROMMET, WATER TUBE LOWER	1	
15	09116-06236	BOLT (6X16)	1	
16	17631-96320	FILTER, WATER	2	
17	03142-04309	SCREW	2	
18-1	17635-87E00	FILTER, SUB WATER	1	
18-2	17635-87E10	PLATE, GEAR CASE	1	OPT
19	09125-05046	SCREW (5X12)	2	
20	09420-04006	KEY	1	
21	17400-88L00	WATER PUMP REPAIR KIT	1	OPT

FIG.160D

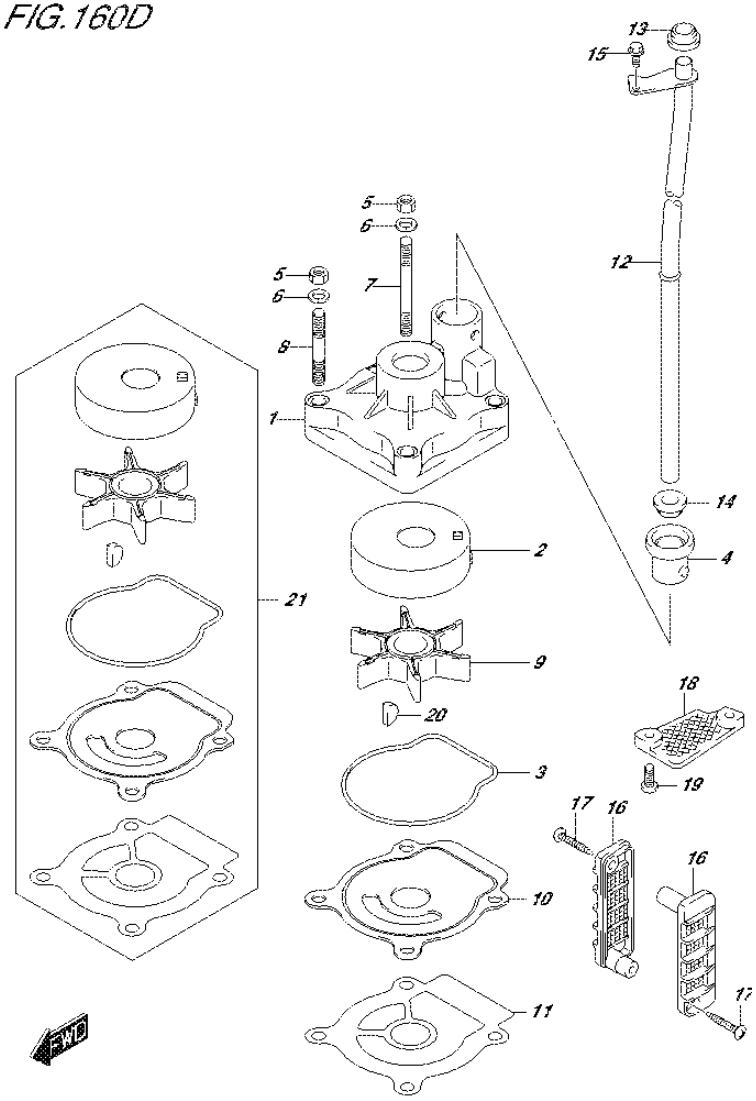

FIG.160D (1-G-14) WATER PUMP (DF40AST E34)

REF NO.	PART NO.	DESCRIPTION	Q'TY	REMARKS
1	17410-88L00	CASE, WATER PUMP	1	
2	17413-95J00	SLEEVE, WATER PUMP CASE	1	
3	17416-95J00	SEALING, WATER PUMP CASE	1	
4	17564-88L00	BUSH, WATER PUMP CASE	1	
5	29141-93J00	NUT	4	
6	29162-93J00	WASHER, LOCK	4	
7	09108-06143	STUD BOLT	2	
8	09108-06144	STUD BOLT	2	
9	17461-96312	IMPELLER, WATER PUMP	1	
10	17471-95J01	PANEL, PUMP CASE UNDER	1	
11	17472-96303	GASKET, PUMP CASE UNDER	1	
12-1	17560-88L00	TUBE, WATER (S)	1	W/TRANSOM(S)
12-2	17560-88L10	TUBE, WATER (L)	1	W/TRANSOM(L)
13	17562-87L00	GROMMET, WATER TUBE UPPER	1	
14	17562-87L00	GROMMET, WATER TUBE LOWER	1	W/TRANSOM(L)
15	09116-06236	BOLT (6X16)	1	
16	17631-96320	FILTER, WATER	2	
17	03142-04309	SCREW	2	
18-1	17635-87E00	FILTER, SUB WATER	1	
18-2	17635-87E10	PLATE, GEAR CASE	1	OPT
19	09125-05046	SCREW (5X12)	2	
20	09420-04006	KEY	1	
21	17400-88L00	WATER PUMP REPAIR KIT	1	OPT

FIG.160E

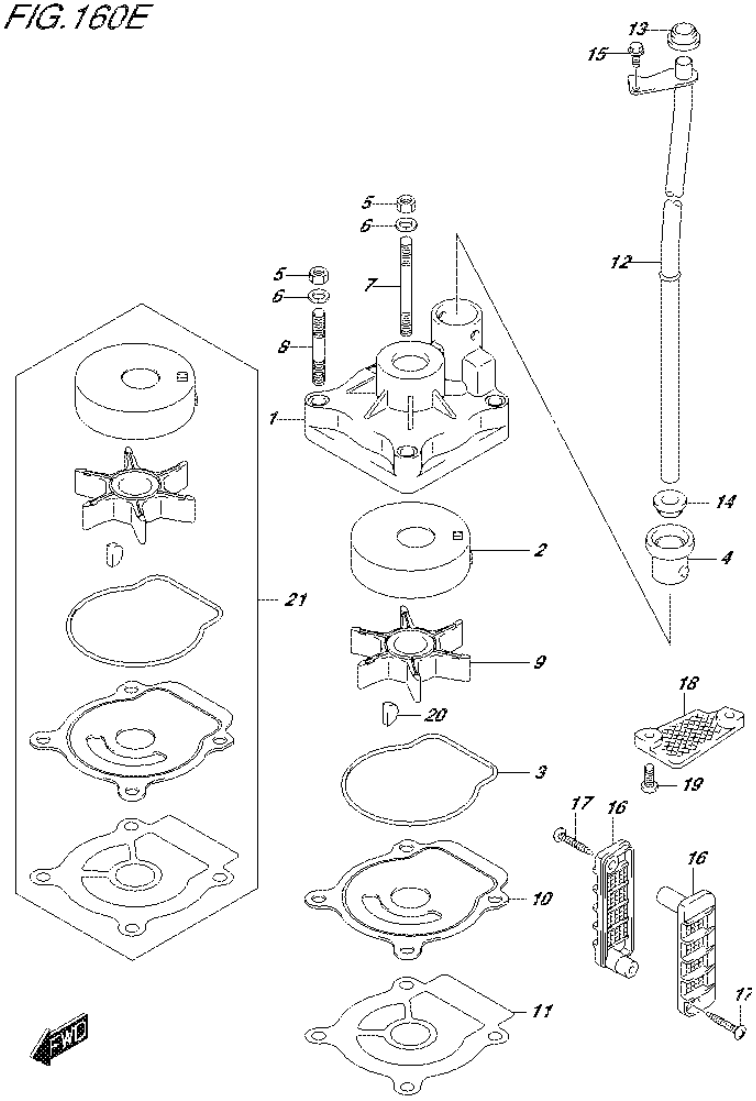

FIG.160E (1-G-15) WATER PUMP (DF50A E01)

REF NO.	PART NO.	DESCRIPTION	Q'TY	REMARKS
1	17410-88L00	CASE, WATER PUMP	1	
2	17413-95J00	SLEEVE, WATER PUMP CASE	1	
3	17416-95J00	SEALING, WATER PUMP CASE	1	
4	17564-88L00	BUSH, WATER PUMP CASE	1	
5	29141-93J00	NUT	4	
6	29162-93J00	WASHER, LOCK	4	
7	09108-06143	STUD BOLT	2	
8	09108-06144	STUD BOLT	2	
9	17461-96312	IMPELLER, WATER PUMP	1	
10	17471-95J01	PANEL, PUMP CASE UNDER	1	
11	17472-96303	GASKET, PUMP CASE UNDER	1	
12-1	17560-88L00	TUBE, WATER (S)	1	W/TRANSOM(S)
12-2	17560-88L10	TUBE, WATER (L)	1	W/TRANSOM(L)
13	17562-87L00	GROMMET, WATER TUBE UPPER	1	
14	17562-87L00	GROMMET, WATER TUBE LOWER	1	W/TRANSOM(L)
15	09116-06236	BOLT (6X16)	1	
16	17631-96320	FILTER, WATER	2	
17	03142-04309	SCREW	2	
18-1	17635-87E00	FILTER, SUB WATER	1	
18-2	17635-87E10	PLATE, GEAR CASE	1	OPT
19	09125-05046	SCREW (5X12)	2	
20	09420-04006	KEY	1	
21	17400-88L00	WATER PUMP REPAIR KIT	1	OPT

FIG.160F

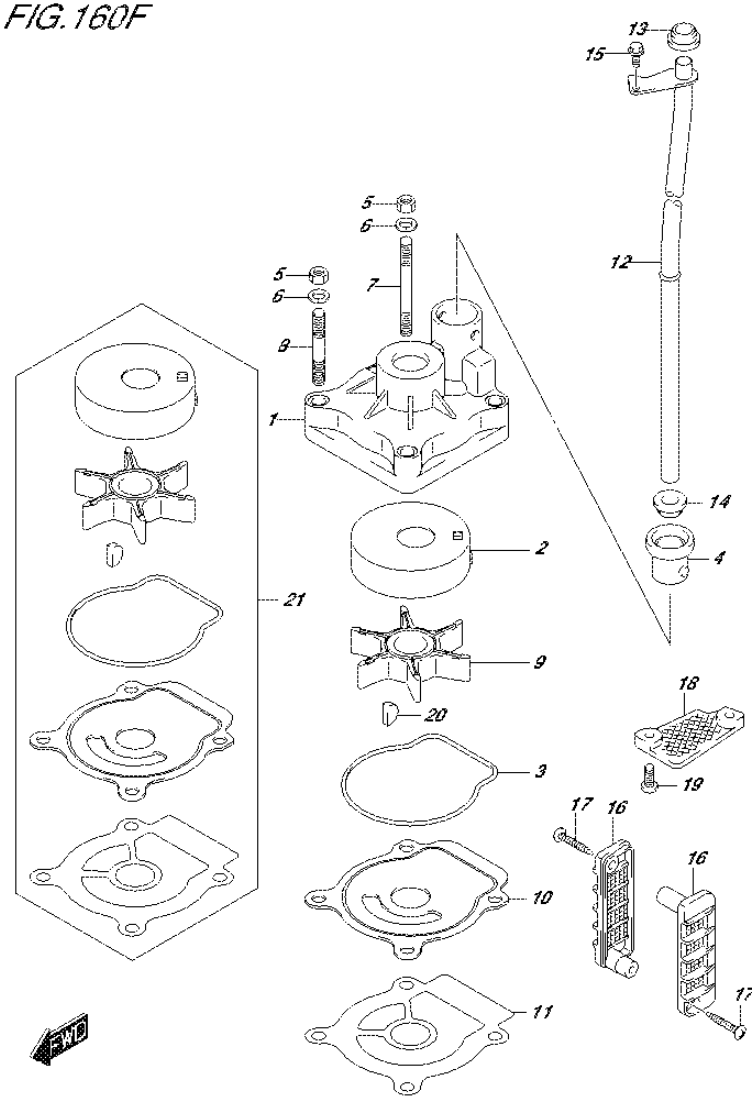

FIG.160F (1-H-2) WATER PUMP (DF50ATH E01)

REF NO.	PART NO.	DESCRIPTION	Q'TY	REMARKS
1	17410-88L00	CASE, WATER PUMP	1	
2	17413-95J00	SLEEVE, WATER PUMP CASE	1	
3	17416-95J00	SEALING, WATER PUMP CASE	1	
4	17564-88L00	BUSH, WATER PUMP CASE	1	
5	29141-93J00	NUT	4	
6	29162-93J00	WASHER, LOCK	4	
7	09108-06143	STUD BOLT	2	
8	09108-06144	STUD BOLT	2	
9	17461-96312	IMPELLER, WATER PUMP	1	
10	17471-95J01	PANEL, PUMP CASE UNDER	1	
11	17472-96303	GASKET, PUMP CASE UNDER	1	
12	17560-88L10	TUBE, WATER (L)	1	
13	17562-87L00	GROMMET, WATER TUBE UPPER	1	
14	17562-87L00	GROMMET, WATER TUBE LOWER	1	
15	09116-06236	BOLT (6X16)	1	
16	17631-96320	FILTER, WATER	2	
17	03142-04309	SCREW	2	
18-1	17635-87E00	FILTER, SUB WATER	1	
18-2	17635-87E10	PLATE, GEAR CASE	1	OPT
19	09125-05046	SCREW (5X12)	2	
20	09420-04006	KEY	1	
21	17400-88L00	WATER PUMP REPAIR KIT	1	OPT

FIG.160G

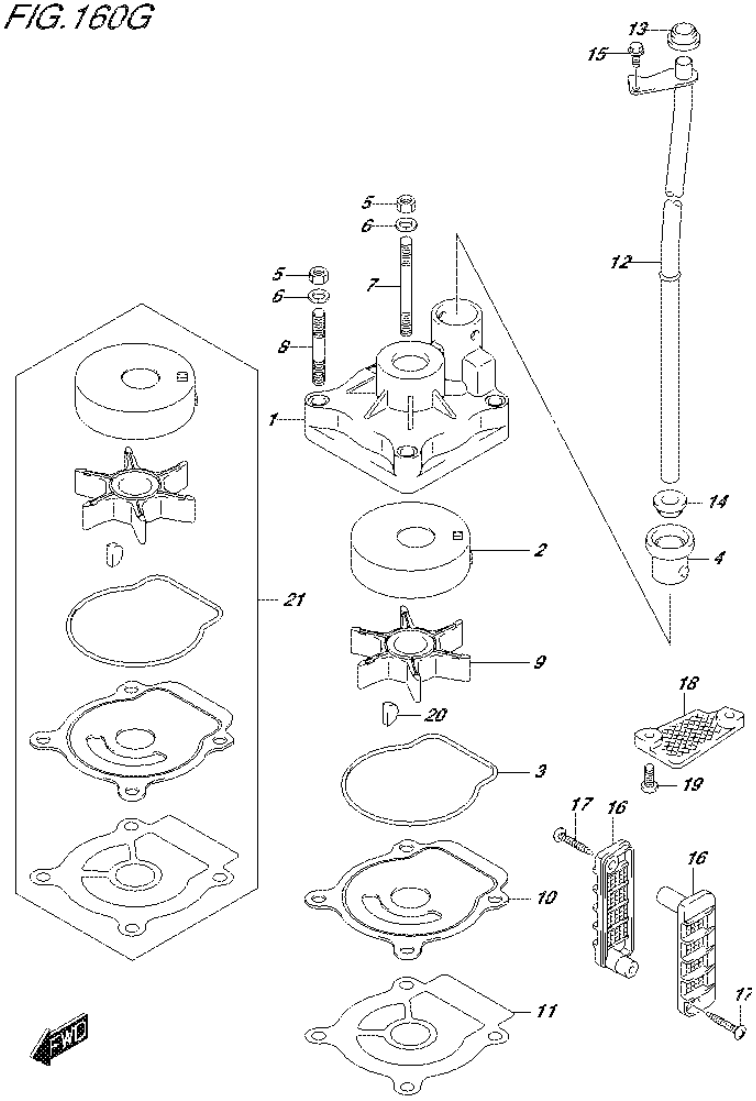

FIG.160G (1-H-3) WATER PUMP (DF60A E01)

REF NO.	PART NO.	DESCRIPTION	Q'TY	REMARKS
1	17410-88L00	CASE, WATER PUMP	1	
2	17413-95J00	SLEEVE, WATER PUMP CASE	1	
3	17416-95J00	SEALING, WATER PUMP CASE	1	
4	17564-88L00	BUSH, WATER PUMP CASE	1	
5	29141-93J00	NUT	4	
6	29162-93J00	WASHER, LOCK	4	
7	09108-06143	STUD BOLT	2	
8	09108-06144	STUD BOLT	2	
9	17461-96312	IMPELLER, WATER PUMP	1	
10	17471-95J01	PANEL, PUMP CASE UNDER	1	
11	17472-96303	GASKET, PUMP CASE UNDER	1	
12-1	17560-88L00	TUBE, WATER (S)	1	W/TRANSOM(S)
12-2	17560-88L10	TUBE, WATER (L)	1	W/TRANSOM(L)
12-3	17560-88L20	TUBE, WATER (X)	1	W/TRANSOM(X)
13	17562-87L00	GROMMET, WATER TUBE UPPER	1	
14	17562-87L00	GROMMET, WATER TUBE LOWER	1	W/TRANSOM(L) W/TRANSOM(X)
15	09116-06236	BOLT (6X16)	1	
16	17631-96320	FILTER, WATER	2	
17	03142-04309	SCREW	2	
18-1	17635-87E00	FILTER, SUB WATER	1	
18-2	17635-87E10	PLATE, GEAR CASE	1	OPT
19	09125-05046	SCREW (5X12)	2	
20	09420-04006	KEY	1	
21	17400-88L00	WATER PUMP REPAIR KIT	1	OPT

FIG.160H

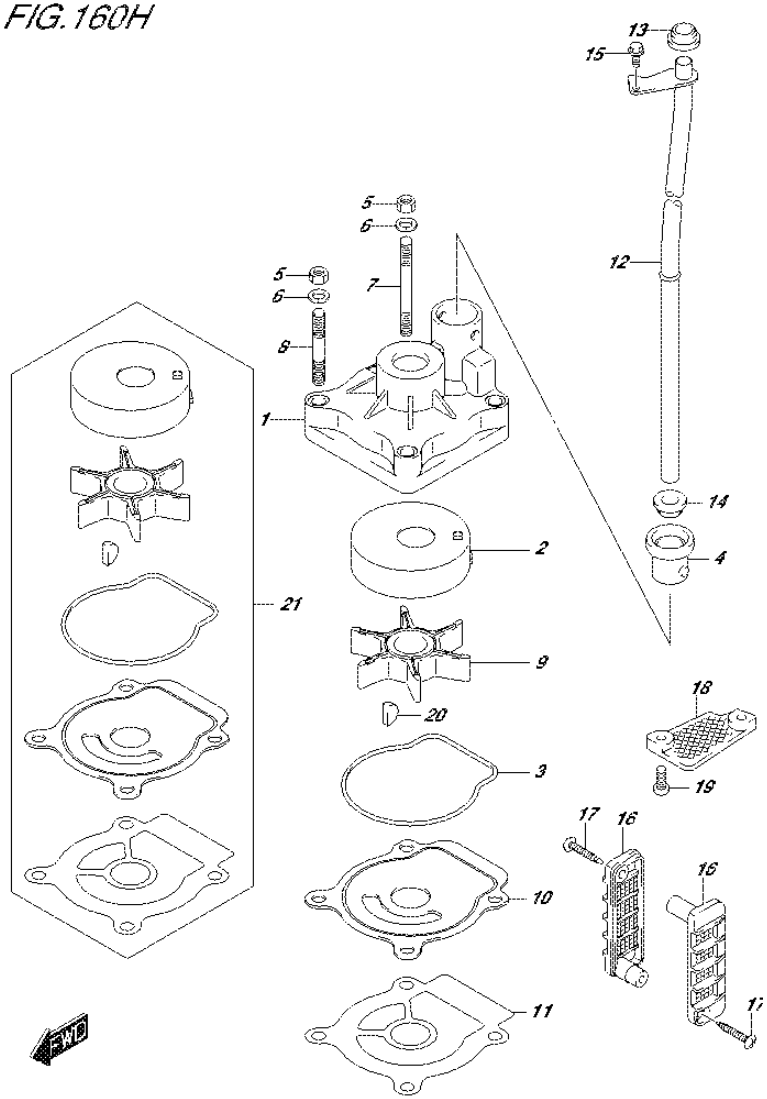

FIG.160H (1-H-4) WATER PUMP (DF60A E40)

REF NO.	PART NO.	DESCRIPTION	Q'TY	REMARKS
1	17410-88L00	CASE, WATER PUMP	1	
2	17413-95J10	SLEEVE, WATER PUMP CASE	1	
3	17416-95J00	SEALING, WATER PUMP CASE	1	
4	17564-88L00	BUSH, WATER PUMP CASE	1	
5	29141-93J00	NUT	4	
6	29162-93J00	WASHER, LOCK	4	
7	09108-06143	STUD BOLT	2	
8	09108-06144	STUD BOLT	2	
9	17461-96312	IMPELLER, WATER PUMP	1	
10	17471-95J10	PANEL, PUMP CASE UNDER	1	
11	17472-96303	GASKET, PUMP CASE UNDER	1	
12-1	17560-88L10	TUBE, WATER (L)	1	W/TRANSOM(L)
12-2	17560-88L20	TUBE, WATER (X)	1	W/TRANSOM(X)
13	17562-87L00	GROMMET, WATER TUBE UPPER	1	
14	17562-87L00	GROMMET, WATER TUBE LOWER	1	
15	09116-06236	BOLT (6X16)	1	
16	17631-96320	FILTER, WATER	2	
17	03142-04309	SCREW	2	
18-1	17635-87E00	FILTER, SUB WATER	1	
18-2	17635-87E10	PLATE, GEAR CASE	1	OPT
19	09125-05046	SCREW (5X12)	2	
20	09420-04006	KEY	1	
21	17400-88L00	WATER PUMP REPAIR KIT	1	OPT

FIG.160J

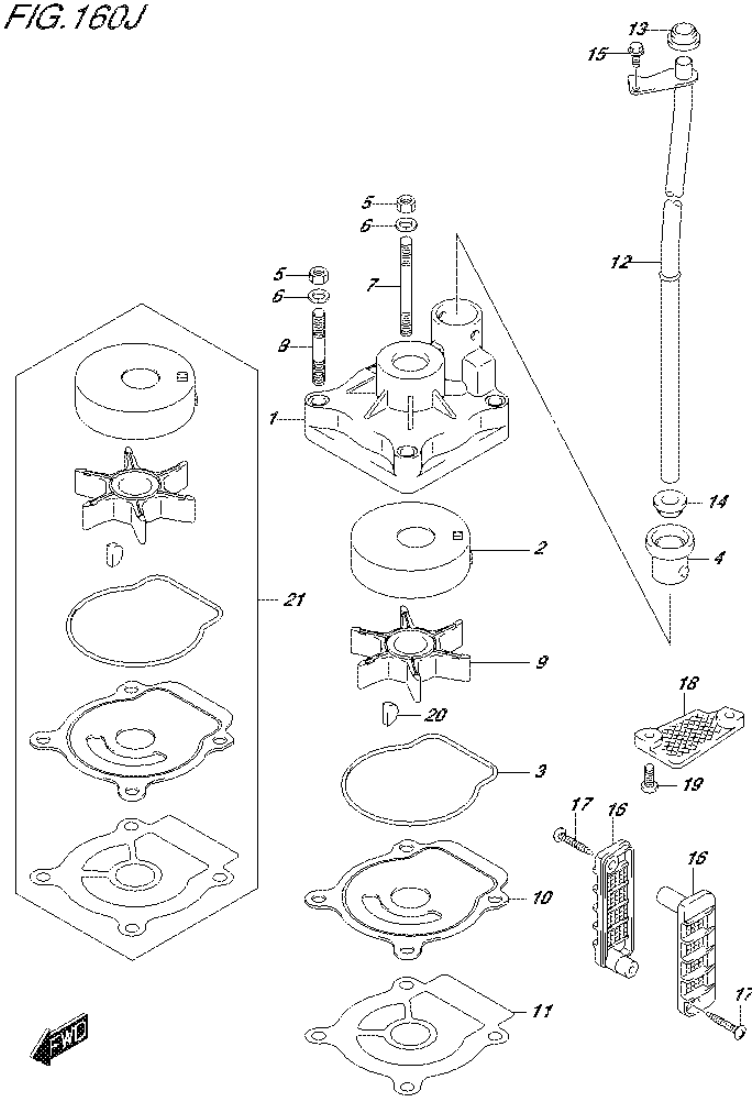

FIG.160J (1-H-5) WATER PUMP (DF60AQH E01)

REF NO.	PART NO.	DESCRIPTION	Q'TY	REMARKS
1	17410-88L00	CASE, WATER PUMP	1	
2	17413-95J00	SLEEVE, WATER PUMP CASE	1	
3	17416-95J00	SEALING, WATER PUMP CASE	1	
4	17564-88L00	BUSH, WATER PUMP CASE	1	
5	29141-93J00	NUT	4	
6	29162-93J00	WASHER, LOCK	4	
7	09108-06143	STUD BOLT	2	
8	09108-06144	STUD BOLT	2	
9	17461-96312	IMPELLER, WATER PUMP	1	
10	17471-95J01	PANEL, PUMP CASE UNDER	1	
11	17472-96303	GASKET, PUMP CASE UNDER	1	
12-1	17560-88L10	TUBE, WATER (L)	1	W/TRANSOM(L)
12-2	17560-88L20	TUBE, WATER (X)	1	W/TRANSOM(X)
13	17562-87L00	GROMMET, WATER TUBE UPPER	1	
14	17562-87L00	GROMMET, WATER TUBE LOWER	1	
15	09116-06236	BOLT (6X16)	1	
16	17631-96320	FILTER, WATER	2	
17	03142-04309	SCREW	2	
18-1	17635-87E00	FILTER, SUB WATER	1	
18-2	17635-87E10	PLATE, GEAR CASE	1	OPT
19	09125-05046	SCREW (5X12)	2	
20	09420-04006	KEY	1	
21	17400-88L00	WATER PUMP REPAIR KIT	1	OPT

FIG.160K

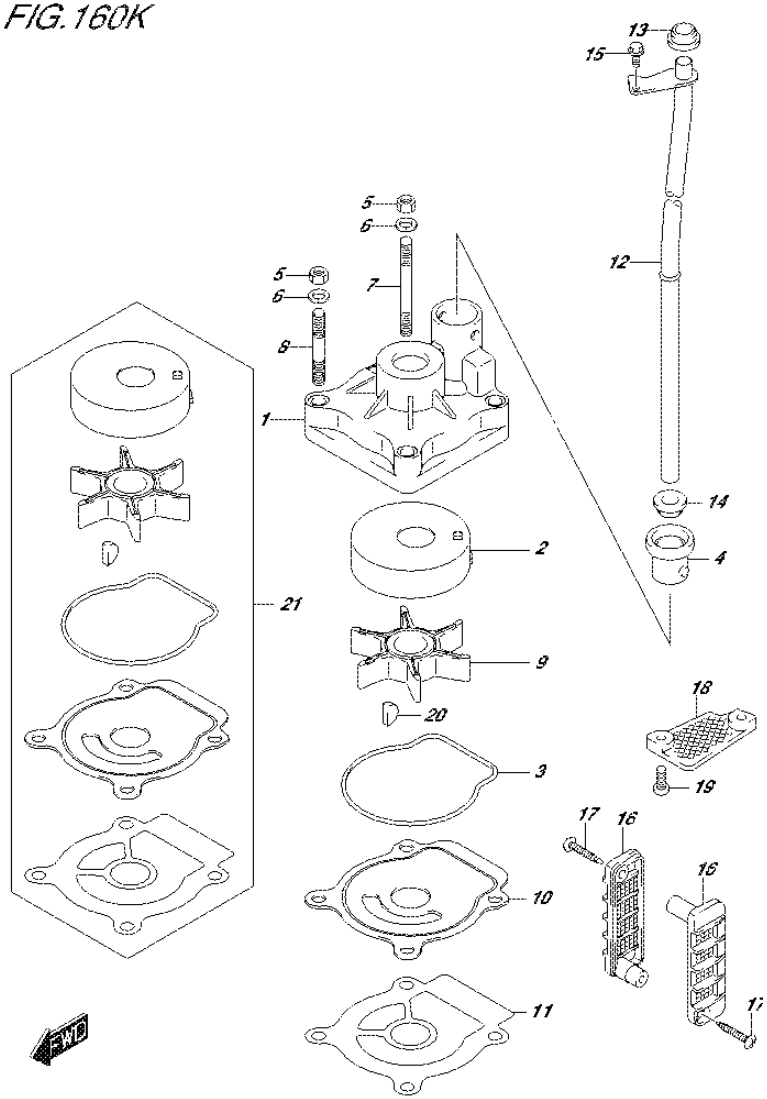

FIG.160K (1-H-6) WATER PUMP (DF60AQH E40)

REF NO.	PART NO.	DESCRIPTION	Q'TY	REMARKS
1	17410-88L00	CASE, WATER PUMP	1	
2	17413-95J10	SLEEVE, WATER PUMP CASE	1	
3	17416-95J00	SEALING, WATER PUMP CASE	1	
4	17564-88L00	BUSH, WATER PUMP CASE	1	
5	29141-93J00	NUT	4	
6	29162-93J00	WASHER, LOCK	4	
7	09108-06143	STUD BOLT	2	
8	09108-06144	STUD BOLT	2	
9	17461-96312	IMPELLER, WATER PUMP	1	
10	17471-95J10	PANEL, PUMP CASE UNDER	1	
11	17472-96303	GASKET, PUMP CASE UNDER	1	
12-1	17560-88L10	TUBE, WATER (L)	1	W/TRANSOM(L)
12-2	17560-88L20	TUBE, WATER (X)	1	W/TRANSOM(X)
13	17562-87L00	GROMMET, WATER TUBE UPPER	1	
14	17562-87L00	GROMMET, WATER TUBE LOWER	1	
15	09116-06236	BOLT (6X16)	1	
16	17631-96320	FILTER, WATER	2	
17	03142-04309	SCREW	2	
18-1	17635-87E00	FILTER, SUB WATER	1	
18-2	17635-87E10	PLATE, GEAR CASE	1	OPT
19	09125-05046	SCREW (5X12)	2	
20	09420-04006	KEY	1	
21	17400-88L00	WATER PUMP REPAIR KIT	1	OPT

FIG.160L

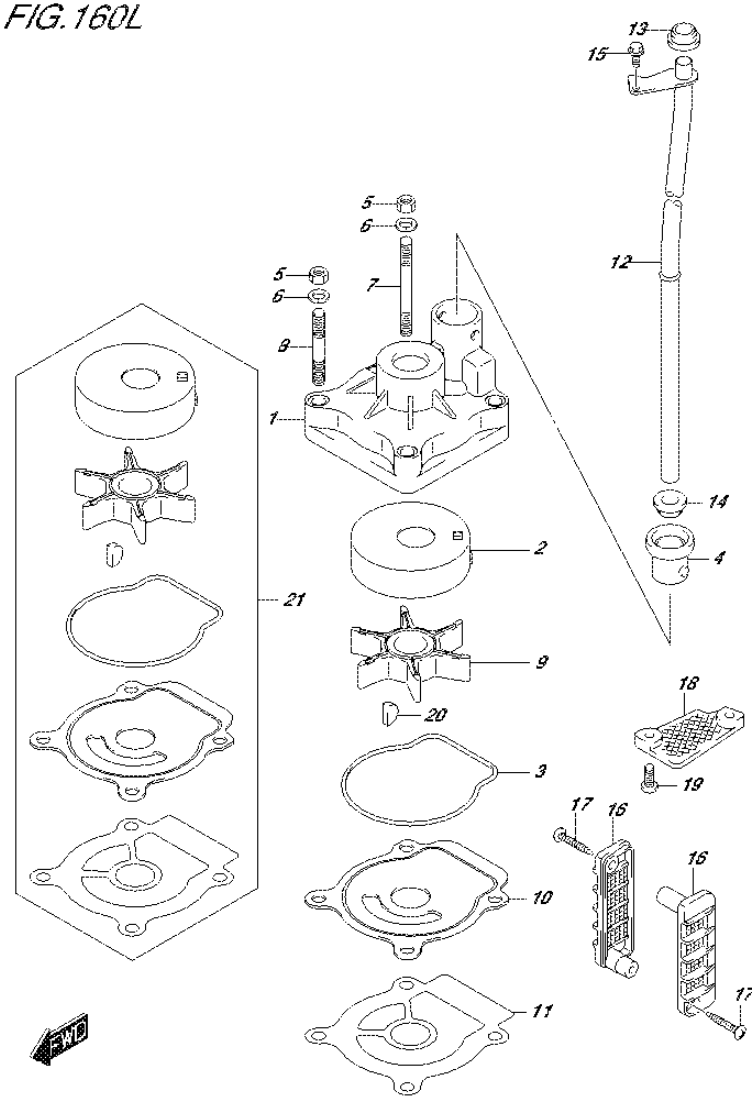

FIG.160L (1-H-7) WATER PUMP (DF60ATH E01)

REF NO.	PART NO.	DESCRIPTION	Q'TY	REMARKS
1	17410-88L00	CASE, WATER PUMP	1	
2	17413-95J00	SLEEVE, WATER PUMP CASE	1	
3	17416-95J00	SEALING, WATER PUMP CASE	1	
4	17564-88L00	BUSH, WATER PUMP CASE	1	
5	29141-93J00	NUT	4	
6	29162-93J00	WASHER, LOCK	4	
7	09108-06143	STUD BOLT	2	
8	09108-06144	STUD BOLT	2	
9	17461-96312	IMPELLER, WATER PUMP	1	
10	17471-95J01	PANEL, PUMP CASE UNDER	1	
11	17472-96303	GASKET, PUMP CASE UNDER	1	
12-1	17560-88L10	TUBE, WATER (L)	1	W/TRANSOM(L)
12-2	17560-88L20	TUBE, WATER (X)	1	W/TRANSOM(X)
13	17562-87L00	GROMMET, WATER TUBE UPPER	1	
14	17562-87L00	GROMMET, WATER TUBE LOWER	1	
15	09116-06236	BOLT (6X16)	1	
16	17631-96320	FILTER, WATER	2	
17	03142-04309	SCREW	2	
18-1	17635-87E00	FILTER, SUB WATER	1	
18-2	17635-87E10	PLATE, GEAR CASE	1	OPT
19	09125-05046	SCREW (5X12)	2	
20	09420-04006	KEY	1	
21	17400-88L00	WATER PUMP REPAIR KIT	1	OPT

FIG.160M

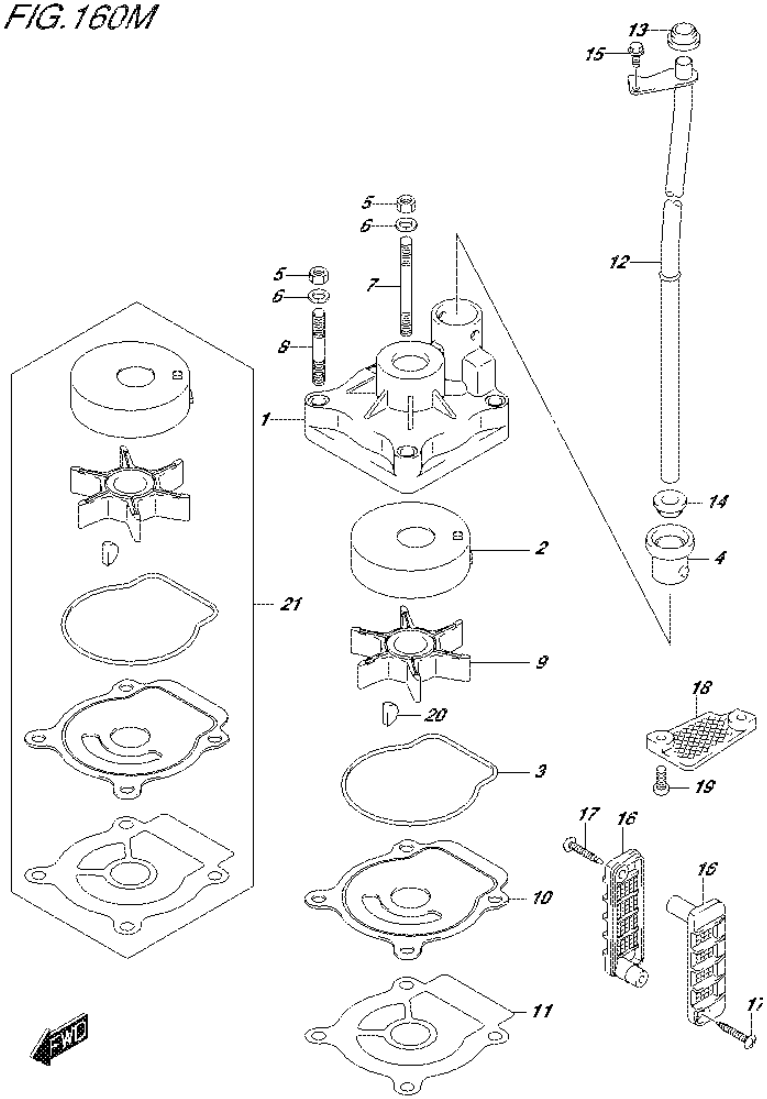

FIG.160M (1-H-8) WATER PUMP (DF60ATH E40)

REF NO.	PART NO.	DESCRIPTION	Q'TY	REMARKS
1	17410-88L00	CASE, WATER PUMP	1	
2	17413-95J10	SLEEVE, WATER PUMP CASE	1	
3	17416-95J00	SEALING, WATER PUMP CASE	1	
4	17564-88L00	BUSH, WATER PUMP CASE	1	
5	29141-93J00	NUT	4	
6	29162-93J00	WASHER, LOCK	4	
7	09108-06143	STUD BOLT	2	
8	09108-06144	STUD BOLT	2	
9	17461-96312	IMPELLER, WATER PUMP	1	
10	17471-95J10	PANEL, PUMP CASE UNDER	1	
11	17472-96303	GASKET, PUMP CASE UNDER	1	
12-1	17560-88L10	TUBE, WATER (L)	1	W/TRANSOM(L)
12-2	17560-88L20	TUBE, WATER (X)	1	W/TRANSOM(X)
13	17562-87L00	GROMMET, WATER TUBE UPPER	1	
14	17562-87L00	GROMMET, WATER TUBE LOWER	1	
15	09116-06236	BOLT (6X16)	1	
16	17631-96320	FILTER, WATER	2	
17	03142-04309	SCREW	2	
18-1	17635-87E00	FILTER, SUB WATER	1	
18-2	17635-87E10	PLATE, GEAR CASE	1	OPT
19	09125-05046	SCREW (5X12)	2	
20	09420-04006	KEY	1	
21	17400-88L00	WATER PUMP REPAIR KIT	1	OPT

FIG.160N

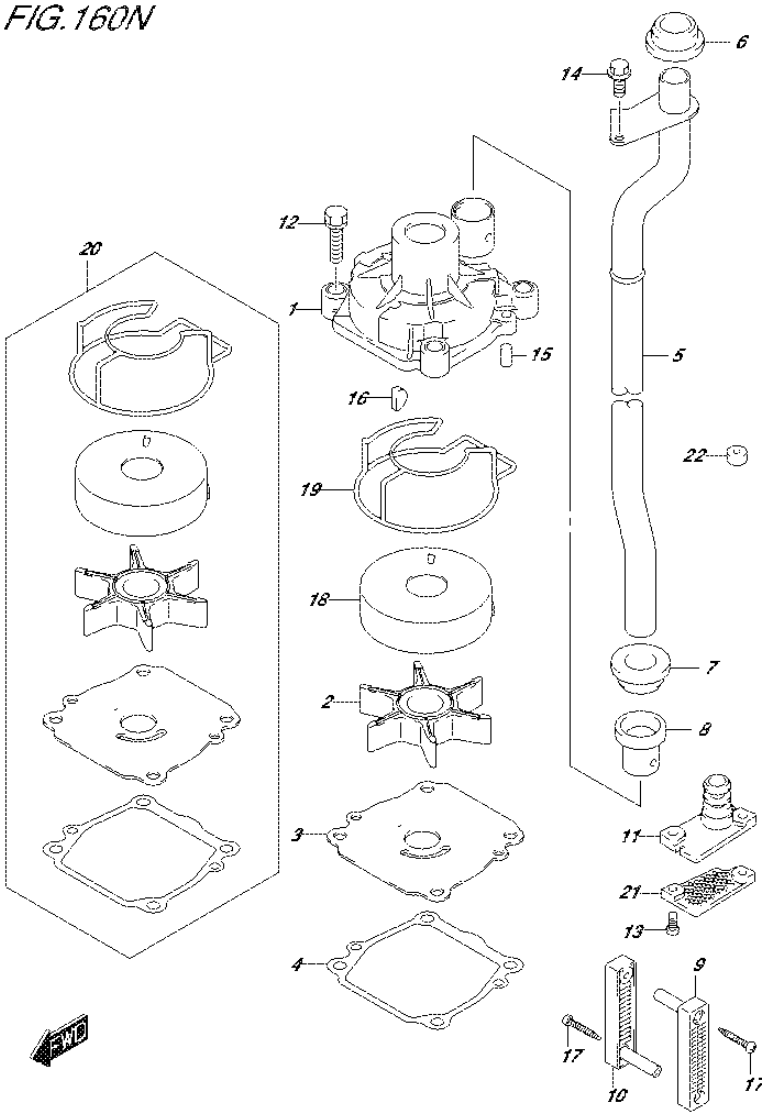

FIG.160N (1-H-9) WATER PUMP (DF50AVT E01)

REF NO.	PART NO.	DESCRIPTION	Q'TY	REMARKS
1	17410-99E10	CASE, WATER PUMP	1	
2	17461-87E12	IMPELLER, WATER PUMP	1	
3	17471-99E00	PANEL, PUMP CASE UNDER	1	
4	17472-87E10	GASKET, PUMP CASE PANEL	1	
5	17560-88L30	TUBE, WATER (L)	1	
6	17562-87L00	BUSH, WATER TUBE UPPER	1	
7	17562-87L00	BUSH, WATER TUBE LOWER	1	
8	17564-87D00	BUSH, WATER PUMP CASE	1	
9	17631-90J00	FILTER, WATER PORT SIDE	1	
10	17632-90J00	FILTER, WATER STBD SIDE	1	
11	17635-90J00	PLUG, SUB WATER TUBE	1	
12	29116-93J10	BOLT	4	
13	09125-05046	SCREW (5X12)	2	
14	09116-06236	BOLT (6X16)	1	
15	09202-06031	PIN (6X12)	2	
16	09420-04009	KEY	1	
17	09132-04034	SCREW (4X18)	2	
18	17413-99E11	SLEEVE, WATER PUMP CASE	1	
19	17416-99E10	SEALING, WATER PUMP CASE	1	
20	17400-99E10	KIT, WATER PUMP REPAIR	1	OPT
21	17635-87E10	PLATE, GEAR CASE	1	OPT
22	55321-87J10	ANODE (MAGNESIUM)	1	OPT

FIG.160P

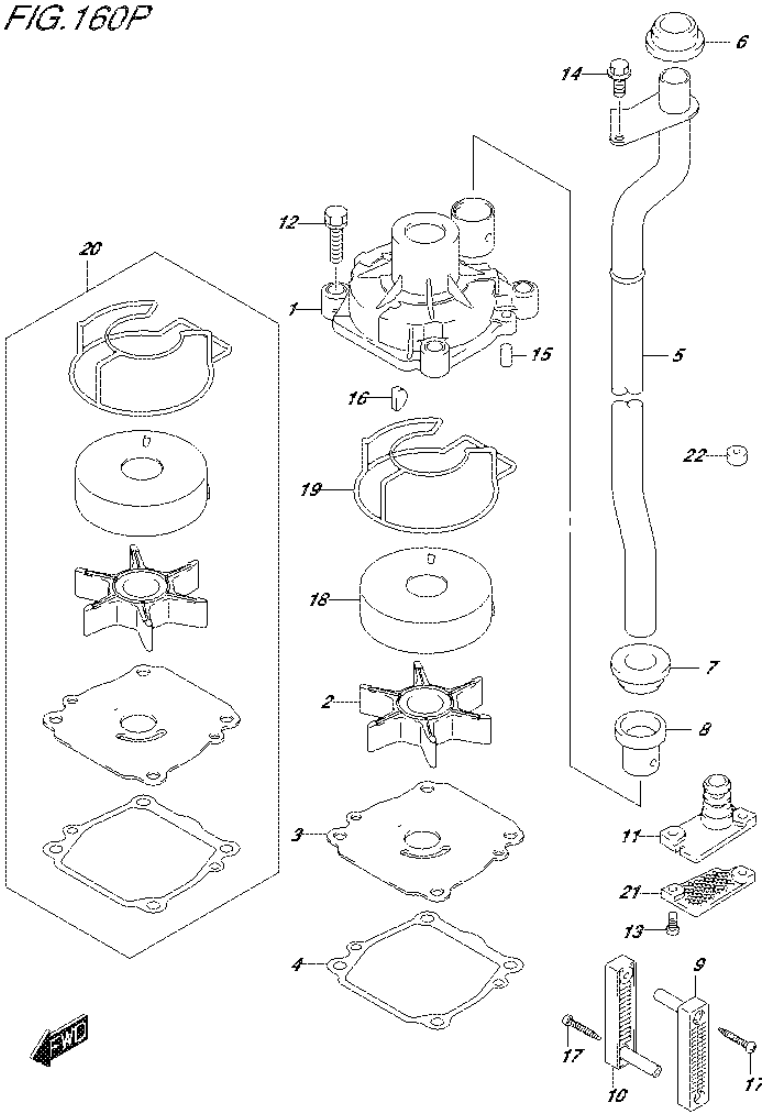

FIG.160P (1-H-10) WATER PUMP (DF50AVTH E01)

REF NO.	PART NO.	DESCRIPTION	Q'TY	REMARKS
1	17410-99E10	CASE, WATER PUMP	1	
2	17461-87E12	IMPELLER, WATER PUMP	1	
3	17471-99E00	PANEL, PUMP CASE UNDER	1	
4	17472-87E10	GASKET, PUMP CASE PANEL	1	
5	17560-88L30	TUBE, WATER (L)	1	
6	17562-87L00	BUSH, WATER TUBE UPPER	1	
7	17562-87L00	BUSH, WATER TUBE LOWER	1	
8	17564-87D00	BUSH, WATER PUMP CASE	1	
9	17631-90J00	FILTER, WATER PORT SIDE	1	
10	17632-90J00	FILTER, WATER STBD SIDE	1	
11	17635-90J00	PLUG, SUB WATER TUBE	1	
12	29116-93J10	BOLT	4	
13	09125-05046	SCREW (5X12)	2	
14	09116-06236	BOLT (6X16)	1	
15	09202-06031	PIN (6X12)	2	
16	09420-04009	KEY	1	
17	09132-04034	SCREW (4X18)	2	
18	17413-99E11	SLEEVE, WATER PUMP CASE	1	
19	17416-99E10	SEALING, WATER PUMP CASE	1	
20	17400-99E10	KIT, WATER PUMP REPAIR	1	OPT
21	17635-87E10	PLATE, GEAR CASE	1	OPT
22	55321-87J10	ANODE (MAGNESIUM)	1	OPT

FIG.160R

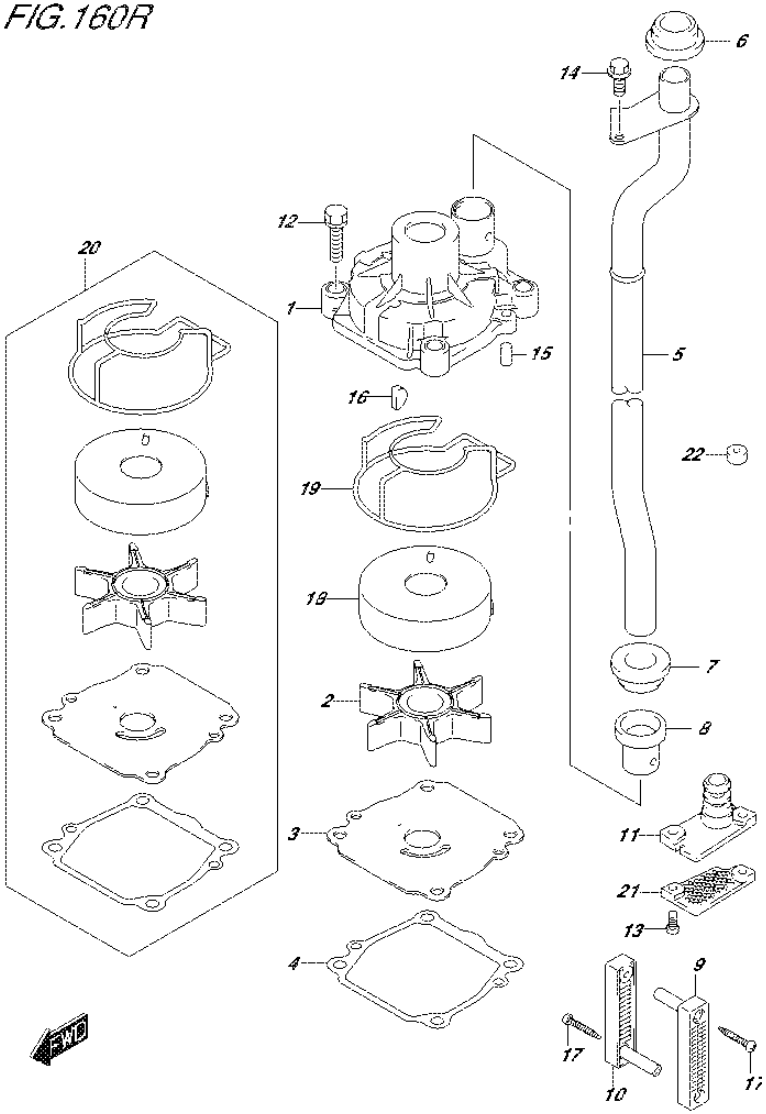

FIG.160R (1-H-11) WATER PUMP (DF60AVT E01)

REF NO.	PART NO.	DESCRIPTION	Q'TY	REMARKS
1	17410-99E10	CASE, WATER PUMP	1	
2	17461-87E12	IMPELLER, WATER PUMP	1	
3	17471-99E00	PANEL, PUMP CASE UNDER	1	
4	17472-87E10	GASKET, PUMP CASE PANEL	1	
5-1	17560-88L30	TUBE, WATER (L)	1	W/TRANSOM(L)
5-2	17560-88L40	TUBE, WATER (X)	1	W/TRANSOM(X)
6	17562-87L00	BUSH, WATER TUBE UPPER	1	
7	17562-87L00	BUSH, WATER TUBE LOWER	1	
8	17564-87D00	BUSH, WATER PUMP CASE	1	
9	17631-90J00	FILTER, WATER PORT SIDE	1	
10	17632-90J00	FILTER, WATER STBD SIDE	1	
11	17635-90J00	PLUG, SUB WATER TUBE	1	
12	29116-93J10	BOLT	4	
13	09125-05046	SCREW (5X12)	2	
14	09116-06236	BOLT (6X16)	1	
15	09202-06031	PIN (6X12)	2	
16	09420-04009	KEY	1	
17	09132-04034	SCREW (4X18)	2	
18	17413-99E11	SLEEVE, WATER PUMP CASE	1	
19	17416-99E10	SEALING, WATER PUMP CASE	1	
20	17400-99E10	KIT, WATER PUMP REPAIR	1	OPT
21	17635-87E10	PLATE, GEAR CASE	1	OPT
22	55321-87J10	ANODE (MAGNESIUM)	1	OPT

FIG.160S

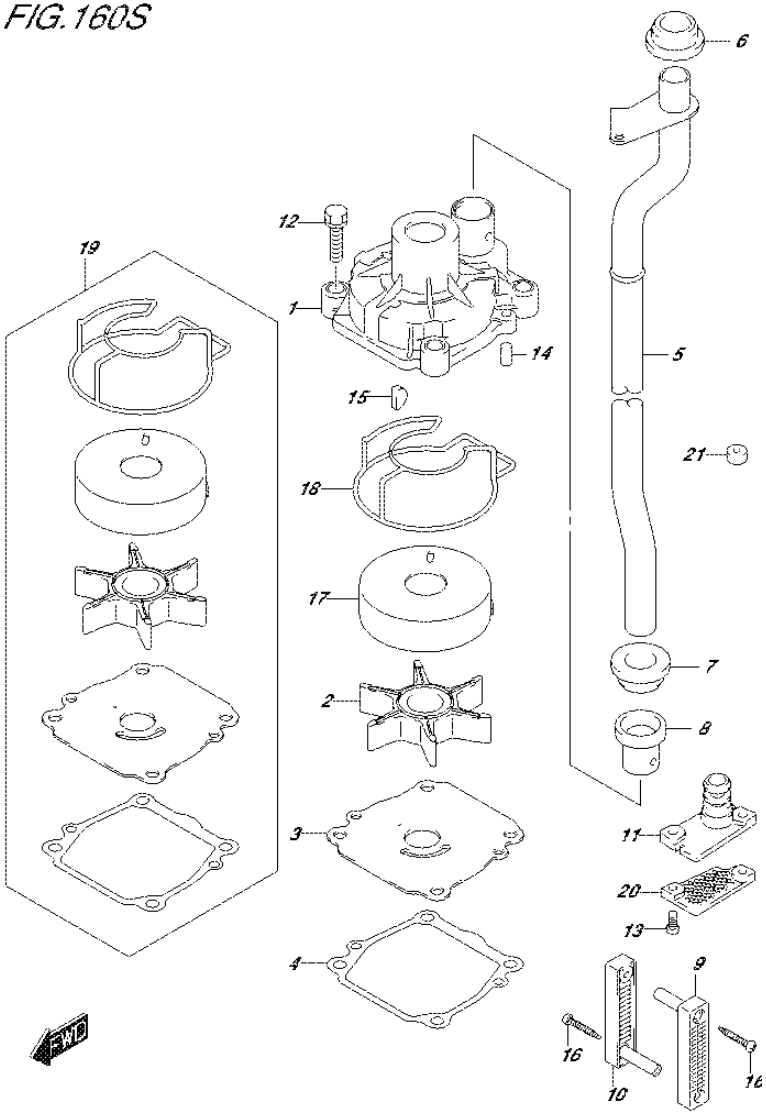

FIG.160S (1-H-12) WATER PUMP (DF60AVT E40)

REF NO.	PART NO.	DESCRIPTION	Q'TY	REMARKS
1	17410-99E10	CASE, WATER PUMP	1	
2	17461-87E12	IMPELLER, WATER PUMP	1	
3	17471-99E10	PANEL, PUMP CASE UNDER	1	
4	17472-87E10	GASKET, PUMP CASE PANEL	1	
5-1	17560-88L30	TUBE, WATER (L)	1	W/TRANSOM(L)
5-2	17560-88L40	TUBE, WATER (X)	1	W/TRANSOM(X)
6	17562-87L00	BUSH, WATER TUBE UPPER	1	
7	17562-87L00	BUSH, WATER TUBE LOWER	1	
8	17564-87D00	BUSH, WATER PUMP CASE	1	
9	17631-90J00	FILTER, WATER PORT SIDE	1	
10	17632-90J00	FILTER, WATER STBD SIDE	1	
11	17635-90J00	PLUG, SUB WATER TUBE	1	
12	29116-93J10	BOLT	4	
13	09125-05046	SCREW (5X12)	2	
14	09202-06031	PIN (6X12)	2	
15	09420-04009	KEY	1	
16	09132-04034	SCREW (4X18)	2	
17	17413-99E21	SLEEVE, WATER PUMP CASE	1	
18	17416-99E10	SEALING, WATER PUMP CASE	1	
19	17400-99E10	KIT, WATER PUMP REPAIR	1	OPT
20	17635-87E10	PLATE, GEAR CASE	1	OPT
21	55321-87J10	ANODE (MAGNESIUM)	1	OPT

FIG.160T

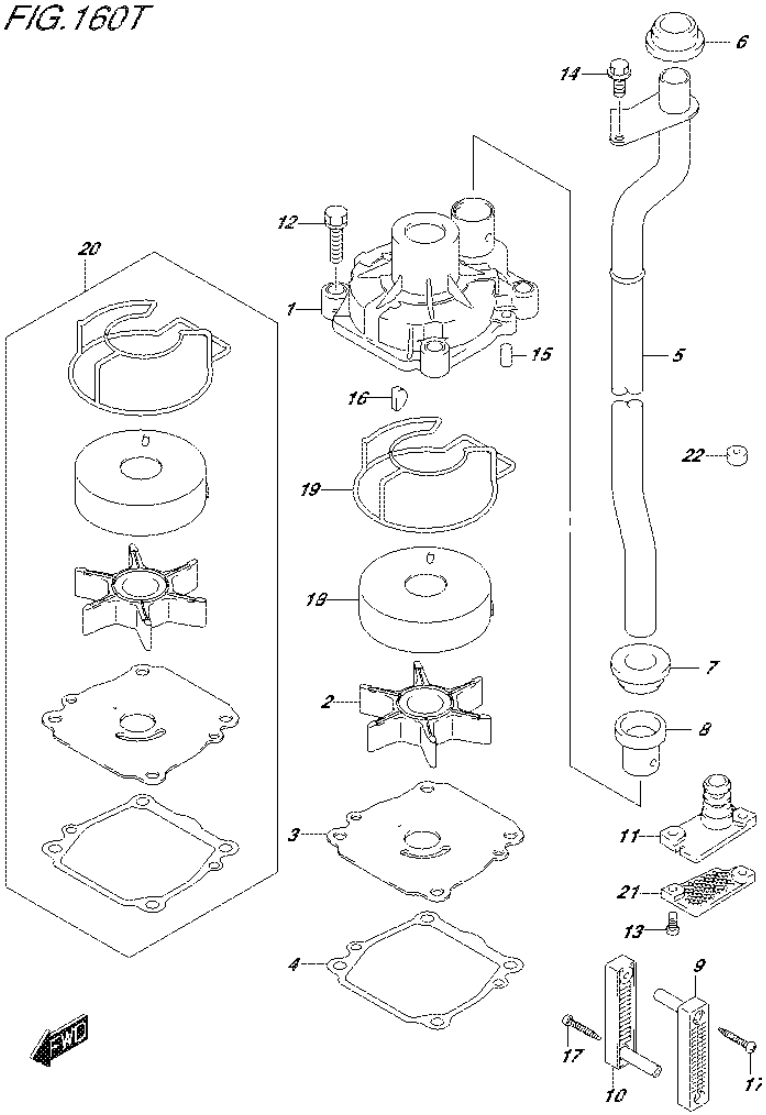

FIG.160T (1-H-13) WATER PUMP (DF60AVTH E01)

REF NO.	PART NO.	DESCRIPTION	Q'TY	REMARKS
1	17410-99E10	CASE, WATER PUMP	1	
2	17461-87E12	IMPELLER, WATER PUMP	1	
3	17471-99E00	PANEL, PUMP CASE UNDER	1	
4	17472-87E10	GASKET, PUMP CASE PANEL	1	
5-1	17560-88L30	TUBE, WATER (L)	1	W/TRANSOM(L)
5-2	17560-88L40	TUBE, WATER (X)	1	W/TRANSOM(X)
6	17562-87L00	BUSH, WATER TUBE UPPER	1	
7	17562-87L00	BUSH, WATER TUBE LOWER	1	
8	17564-87D00	BUSH, WATER PUMP CASE	1	
9	17631-90J00	FILTER, WATER PORT SIDE	1	
10	17632-90J00	FILTER, WATER STBD SIDE	1	
11	17635-90J00	PLUG, SUB WATER TUBE	1	
12	29116-93J10	BOLT	4	
13	09125-05046	SCREW (5X12)	2	
14	09116-06236	BOLT (6X16)	1	
15	09202-06031	PIN (6X12)	2	
16	09420-04009	KEY	1	
17	09132-04034	SCREW (4X18)	2	
18	17413-99E11	SLEEVE, WATER PUMP CASE	1	
19	17416-99E10	SEALING, WATER PUMP CASE	1	
20	17400-99E10	KIT, WATER PUMP REPAIR	1	OPT
21	17635-87E10	PLATE, GEAR CASE	1	OPT
22	55321-87J10	ANODE (MAGNESIUM)	1	OPT

FIG.160U

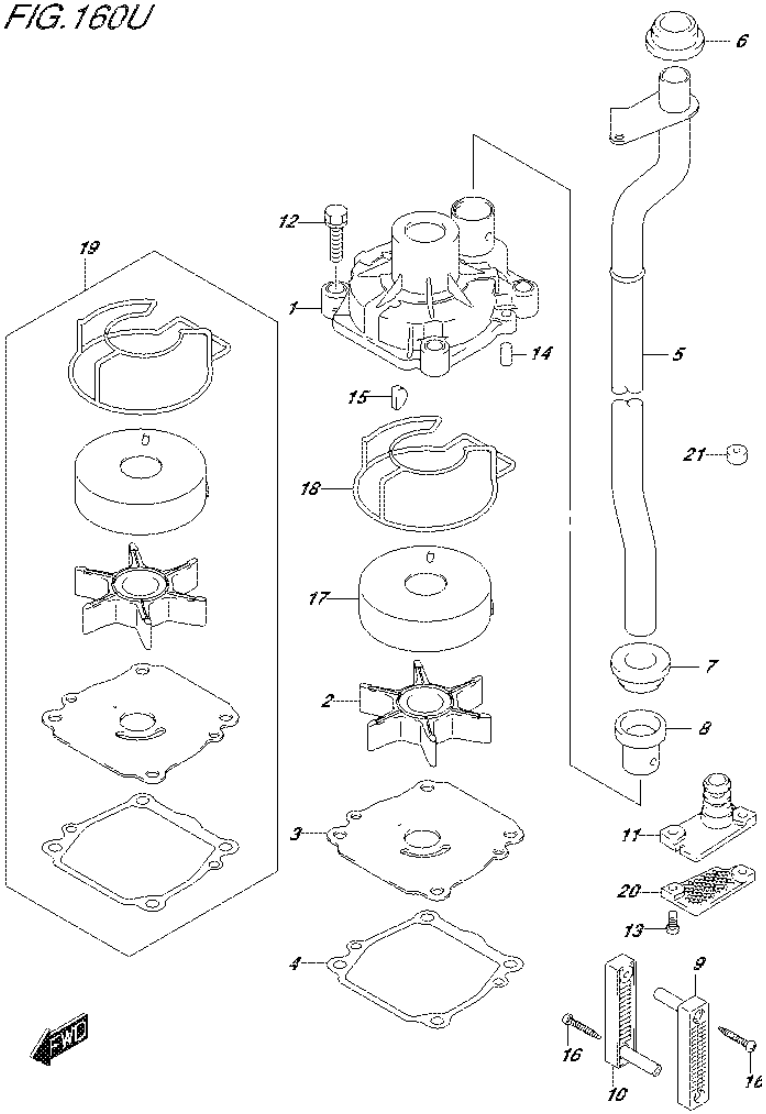

FIG.160U (1-H-14) WATER PUMP (DF60AVTH E40)

REF NO.	PART NO.	DESCRIPTION	Q'TY	REMARKS
1	17410-99E10	CASE, WATER PUMP	1	
2	17461-87E12	IMPELLER, WATER PUMP	1	
3	17471-99E10	PANEL, PUMP CASE UNDER	1	
4	17472-87E10	GASKET, PUMP CASE PANEL	1	
5-1	17560-88L30	TUBE, WATER (L)	1	W/TRANSOM(L)
5-2	17560-88L40	TUBE, WATER (X)	1	W/TRANSOM(X)
6	17562-87L00	BUSH, WATER TUBE UPPER	1	
7	17562-87L00	BUSH, WATER TUBE LOWER	1	
8	17564-87D00	BUSH, WATER PUMP CASE	1	
9	17631-90J00	FILTER, WATER PORT SIDE	1	
10	17632-90J00	FILTER, WATER STBD SIDE	1	
11	17635-90J00	PLUG, SUB WATER TUBE	1	
12	29116-93J10	BOLT	4	
13	09125-05046	SCREW (5X12)	2	
14	09202-06031	PIN (6X12)	2	
15	09420-04009	KEY	1	
16	09132-04034	SCREW (4X18)	2	
17	17413-99E21	SLEEVE, WATER PUMP CASE	1	
18	17416-99E10	SEALING, WATER PUMP CASE	1	
19	17400-99E10	KIT, WATER PUMP REPAIR	1	OPT
20	17635-87E10	PLATE, GEAR CASE	1	OPT
21	55321-87J10	ANODE (MAGNESIUM)	1	OPT

FIG.162A

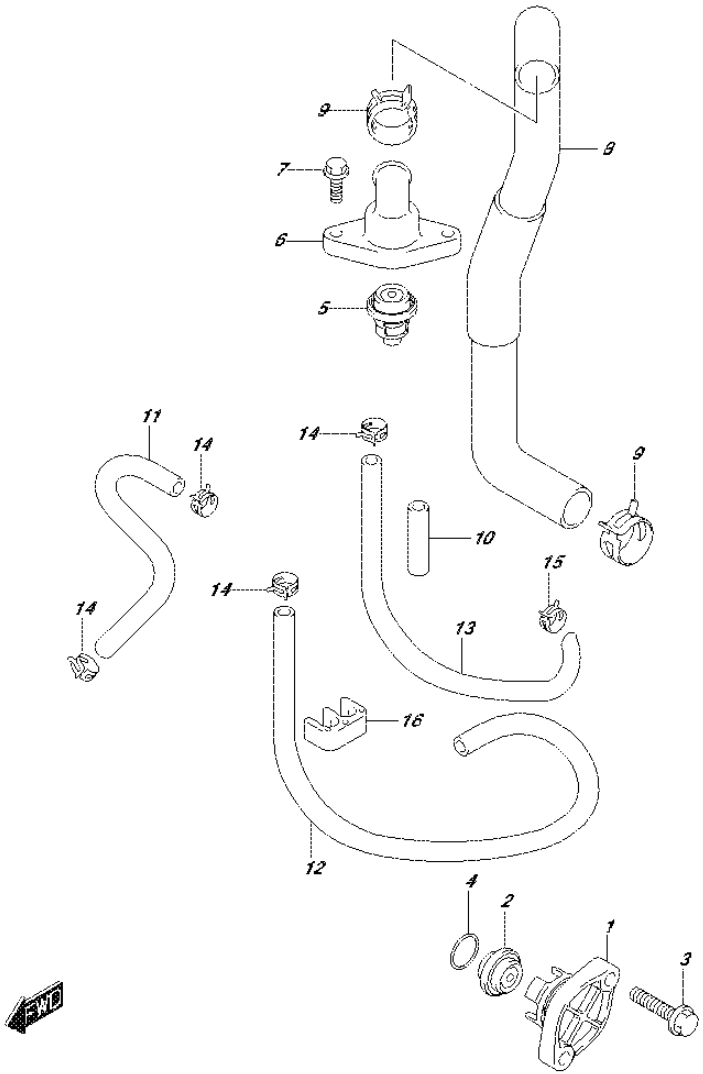

FIG.162A (1-H-15) THERMOSTAT (DF40A E01)

REF NO.	PART NO.	DESCRIPTION	Q'TY	REMARKS
1-1	17611-90J00-0EP	COVER, WATER PRESS VALVE (BLACK)	1	
1-2	17611-90J00-Y5S	COVER, WATER PRESS VALVE (WHITE)	1	
2	17660-99E01	VALVE, WATER PRESSURE	1	
3	09116-06121	BOLT (6X25)	2	
4	09280-26006	O RING (D:3.1,ID:26.4)	1	
5	17670-93953	THERMOSTAT (60C)	1	
6	17681-88L00	COVER, THERMOSTAT	1	
7	01550-06207	BOLT	2	
8	11196-88L00	HOSE, WATER RETURN	1	
9	09401-25406	CLIP	2	
10	18498-94J20	PROTECTOR, WATER HOSE	2	L:320->50
11	17712-88L00	HOSE (SEPARATOR TO INSP)	1	
12	09352-50903-600	HOSE (5X9X600)	1	L:600->500
13	09359-50901-980	HOSE	1	L:980->250
14	09401-08413	CLIP	4	
15	09401-10415	CLIP	1	
16	09408-00175	CLAMP	1	

FIG.162B

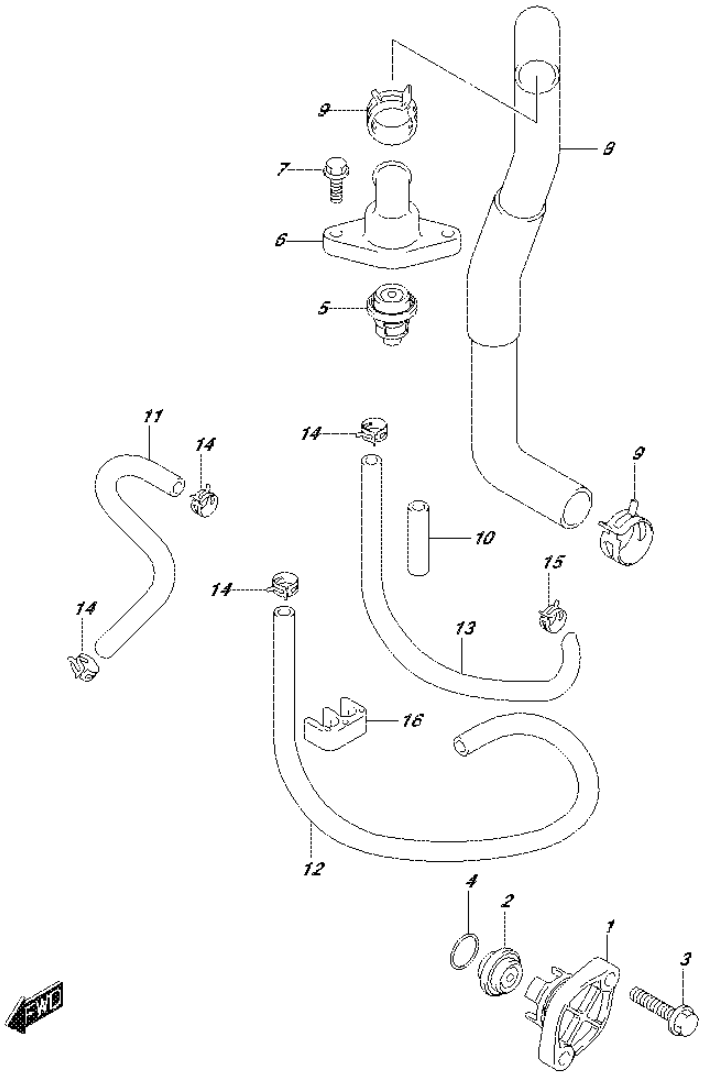

FIG.162B (1-I-2) THERMOSTAT (DF40AQH E01)

REF NO.	PART NO.	DESCRIPTION	Q'TY	REMARKS
1	17611-90J00-0EP	COVER, WATER PRESS VALVE (BLACK)	1	
2	17660-99E01	VALVE, WATER PRESSURE	1	
3	09116-06121	BOLT (6X25)	2	
4	09280-26006	O RING (D:3.1,ID:26.4)	1	
5	17670-93953	THERMOSTAT (60C)	1	
6	17681-88L00	COVER, THERMOSTAT	1	
7	01550-06207	BOLT	2	
8	11196-88L00	HOSE, WATER RETURN	1	
9	09401-25406	CLIP	2	
10	18498-94J20	PROTECTOR, WATER HOSE	2	L:320->50
11	17712-88L00	HOSE (SEPARATOR TO INSP)	1	
12	09352-50903-600	HOSE (5X9X600)	1	L:600->500
13	09359-50901-980	HOSE	1	L:980->250
14	09401-08413	CLIP	4	
15	09401-10415	CLIP	1	
16	09408-00175	CLAMP	1	

FIG.162C

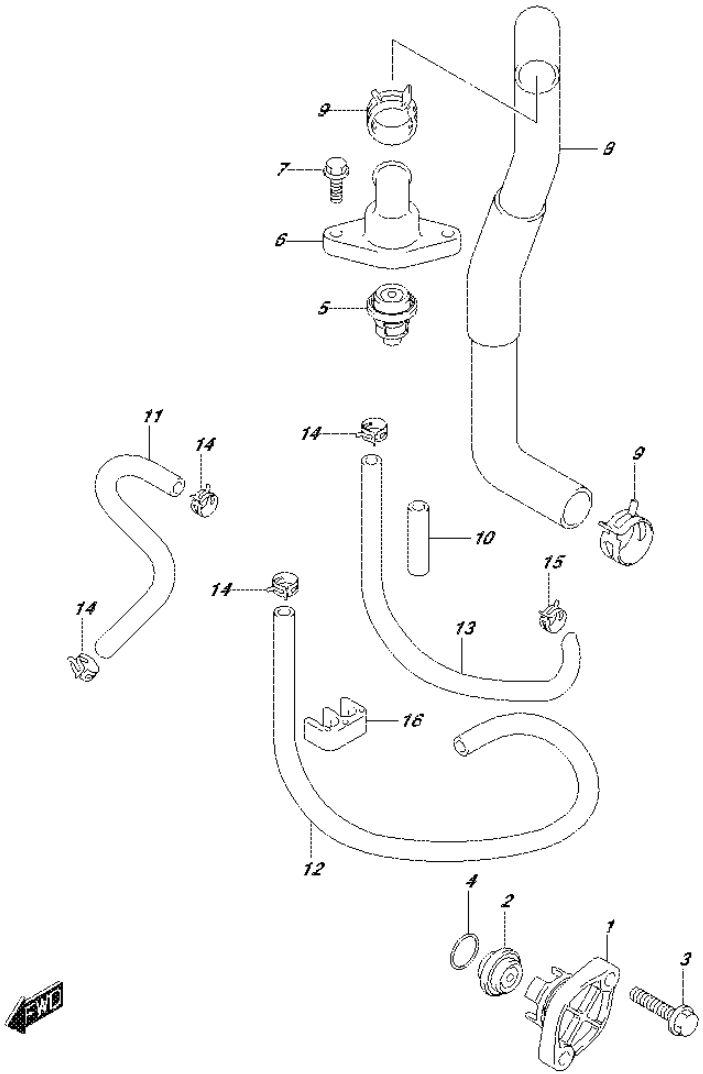

FIG.162C (1-I-3) THERMOSTAT (DF40ATH E01)

REF NO.	PART NO.	DESCRIPTION	Q'TY	REMARKS
1	17611-90J00-0EP	COVER, WATER PRESS VALVE (BLACK)	1	
2	17660-99E01	VALVE, WATER PRESSURE	1	
3	09116-06121	BOLT (6X25)	2	
4	09280-26006	O RING (D:3.1,ID:26.4)	1	
5	17670-93953	THERMOSTAT (60C)	1	
6	17681-88L00	COVER, THERMOSTAT	1	
7	01550-06207	BOLT	2	
8	11196-88L00	HOSE, WATER RETURN	1	
9	09401-25406	CLIP	2	
10	18498-94J20	PROTECTOR, WATER HOSE	2	L:320->50
11	17712-88L00	HOSE (SEPARATOR TO INSP)	1	
12	09352-50903-600	HOSE (5X9X600)	1	L:600->500
13	09359-50901-980	HOSE	1	L:980->250
14	09401-08413	CLIP	4	
15	09401-10415	CLIP	1	
16	09408-00175	CLAMP	1	

FIG.162D

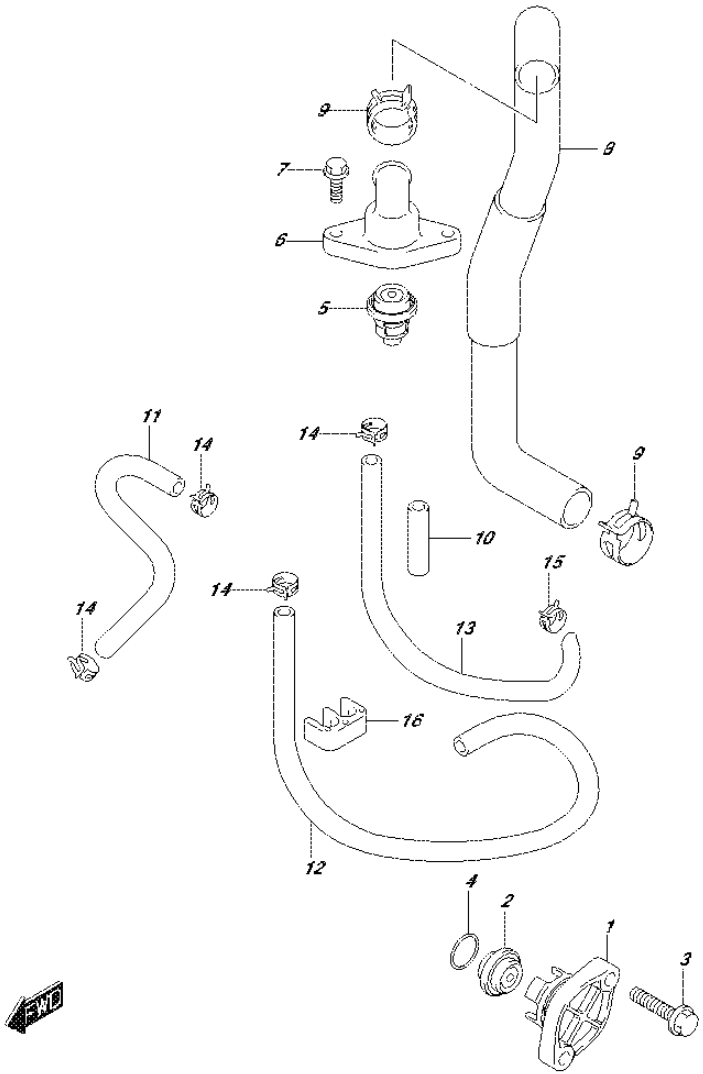

FIG.162D (1-I-4) THERMOSTAT (DF40AST E34)

REF NO.	PART NO.	DESCRIPTION	Q'TY	REMARKS
1-1	17611-90J00-0EP	COVER, WATER PRESS VALVE (BLACK)	1	
1-2	17611-90J00-Y5S	COVER, WATER PRESS VALVE (WHITE)	1	
2	17660-99E01	VALVE, WATER PRESSURE	1	
3	09116-06121	BOLT (6X25)	2	
4	09280-26006	O RING (D:3.1,ID:26.4)	1	
5	17670-93953	THERMOSTAT (60C)	1	
6	17681-88L00	COVER, THERMOSTAT	1	
7	01550-06207	BOLT	2	
8	11196-88L00	HOSE, WATER RETURN	1	
9	09401-25406	CLIP	2	
10	18498-94J20	PROTECTOR, WATER HOSE	2	L:320->50
11	17712-88L00	HOSE (SEPARATOR TO INSP)	1	
12	09352-50903-600	HOSE (5X9X600)	1	L:600->500
13	09359-50901-980	HOSE	1	L:980->250
14	09401-08413	CLIP	4	
15	09401-10415	CLIP	1	
16	09408-00175	CLAMP	1	

FIG.162E

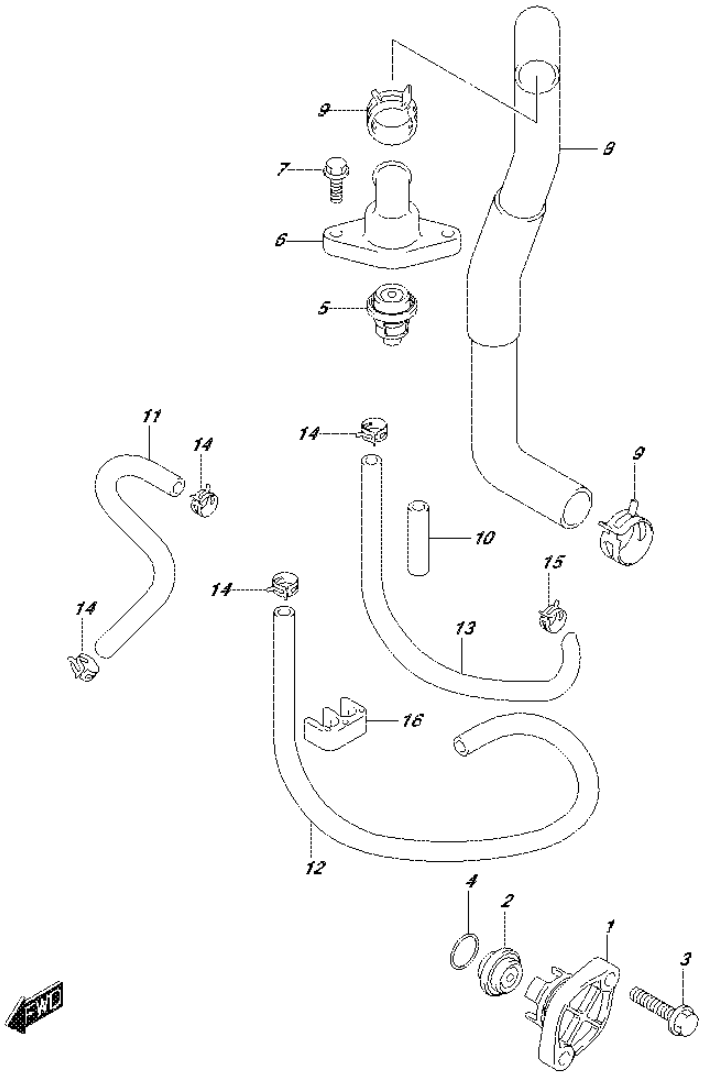

FIG.162E (1-I-5) THERMOSTAT (DF50A E01)

REF NO.	PART NO.	DESCRIPTION	Q'TY	REMARKS
1-1	17611-90J00-0EP	COVER, WATER PRESS VALVE (BLACK)	1	
1-2	17611-90J00-Y5S	COVER, WATER PRESS VALVE (WHITE)	1	
2	17660-99E01	VALVE, WATER PRESSURE	1	
3	09116-06121	BOLT (6X25)	2	
4	09280-26006	O RING (D:3.1,ID:26.4)	1	
5	17670-93953	THERMOSTAT (60C)	1	
6	17681-88L00	COVER, THERMOSTAT	1	
7	01550-06207	BOLT	2	
8	11196-88L00	HOSE, WATER RETURN	1	
9	09401-25406	CLIP	2	
10	18498-94J20	PROTECTOR, WATER HOSE	2	L:320->50
11	17712-88L00	HOSE (SEPARATOR TO INSP)	1	
12	09352-50903-600	HOSE (5X9X600)	1	L:600->500
13	09359-50901-980	HOSE	1	L:980->250
14	09401-08413	CLIP	4	
15	09401-10415	CLIP	1	
16	09408-00175	CLAMP	1	

FIG.162F

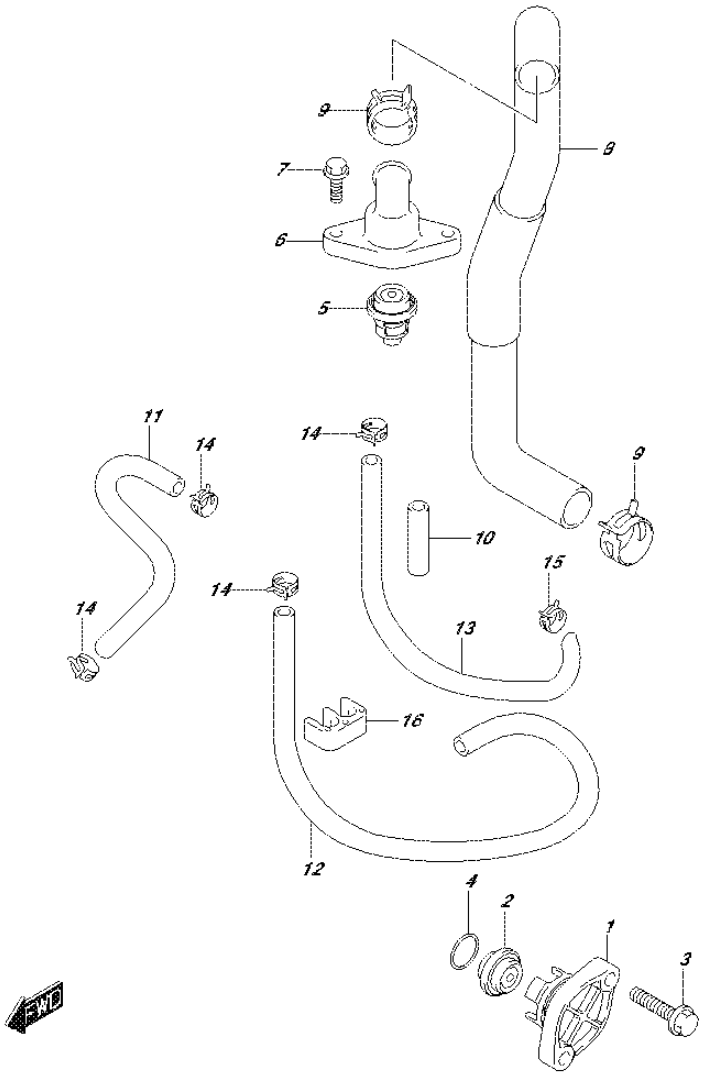

FIG.162F (1-I-6) THERMOSTAT (DF50ATH E01)

REF NO.	PART NO.	DESCRIPTION	Q'TY	REMARKS
1	17611-90J00-0EP	COVER, WATER PRESS VALVE (BLACK)	1	
2	17660-99E01	VALVE, WATER PRESSURE	1	
3	09116-06121	BOLT (6X25)	2	
4	09280-26006	O RING (D:3.1,ID:26.4)	1	
5	17670-93953	THERMOSTAT (60C)	1	
6	17681-88L00	COVER, THERMOSTAT	1	
7	01550-06207	BOLT	2	
8	11196-88L00	HOSE, WATER RETURN	1	
9	09401-25406	CLIP	2	
10	18498-94J20	PROTECTOR, WATER HOSE	2	L:320->50
11	17712-88L00	HOSE (SEPARATOR TO INSP)	1	
12	09352-50903-600	HOSE (5X9X600)	1	L:600->500
13	09359-50901-980	HOSE	1	L:980->250
14	09401-08413	CLIP	4	
15	09401-10415	CLIP	1	
16	09408-00175	CLAMP	1	

FIG.162G

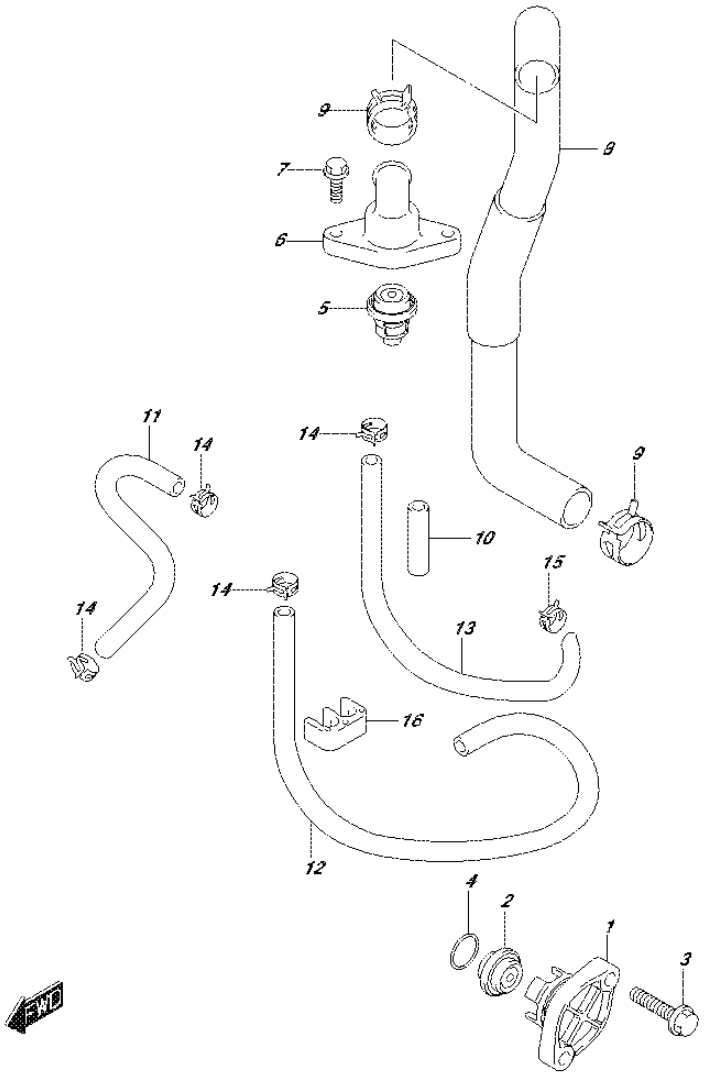

FIG.162G (1-I-7) THERMOSTAT (DF60A E01)

REF NO.	PART NO.	DESCRIPTION	Q'TY	REMARKS
1-1	17611-90J00-0EP	COVER, WATER PRESS VALVE (BLACK)	1	
1-2	17611-90J00-Y5S	COVER, WATER PRESS VALVE (WHITE)	1	
2	17660-99E01	VALVE, WATER PRESSURE	1	
3	09116-06121	BOLT (6X25)	2	
4	09280-26006	O RING (D:3.1,ID:26.4)	1	
5	17670-93953	THERMOSTAT (60C)	1	
6	17681-88L00	COVER, THERMOSTAT	1	
7	01550-06207	BOLT	2	
8	11196-88L00	HOSE, WATER RETURN	1	
9	09401-25406	CLIP	2	
10	18498-94J20	PROTECTOR, WATER HOSE	2	L:320->50
11	17712-88L00	HOSE (SEPARATOR TO INSP)	1	
12	09352-50903-600	HOSE (5X9X600)	1	L:600->500
13	09359-50901-980	HOSE	1	L:980->250
14	09401-08413	CLIP	4	
15	09401-10415	CLIP	1	
16	09408-00175	CLAMP	1	

FIG.162H

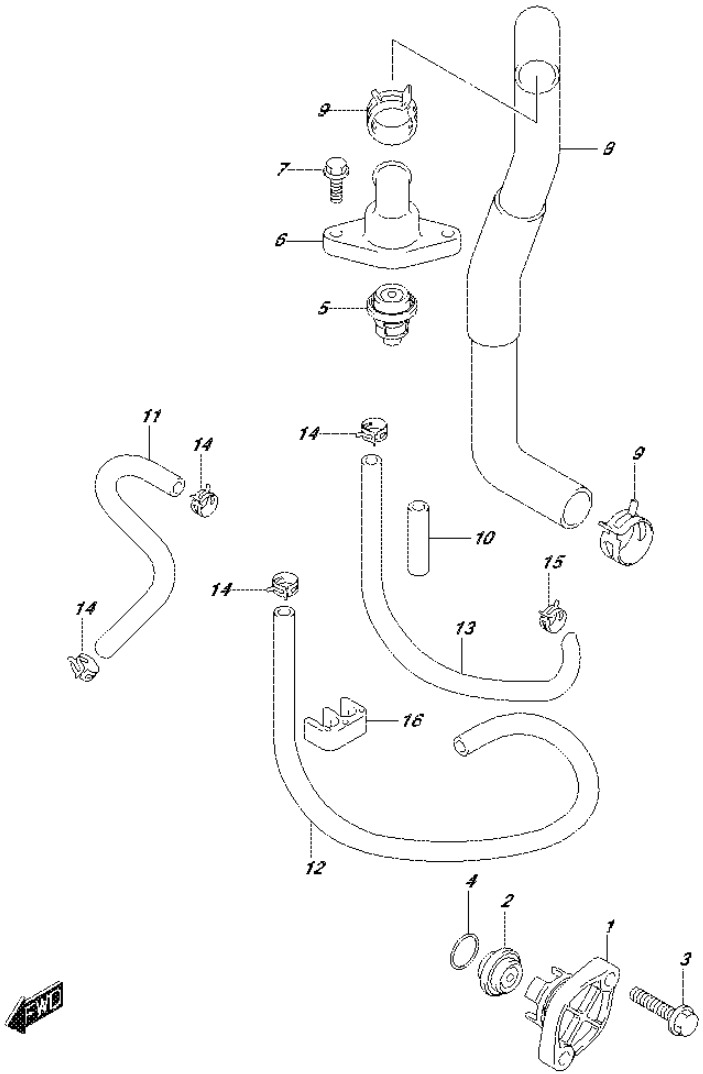

FIG.162H (1-I-8) THERMOSTAT (DF60A E40)

REF NO.	PART NO.	DESCRIPTION	Q'TY	REMARKS
1-1	17611-90J00-0EP	COVER, WATER PRESS VALVE (BLACK)	1	
1-2	17611-90J00-Y5S	COVER, WATER PRESS VALVE (WHITE)	1	
2	17660-99E01	VALVE, WATER PRESSURE	1	
3	09116-06121	BOLT (6X25)	2	
4	09280-26006	O RING (D:3.1,ID:26.4)	1	
5	17670-93953	THERMOSTAT (60C)	1	
6	17681-88L00	COVER, THERMOSTAT	1	
7	01550-06207	BOLT	2	
8	11196-88L00	HOSE, WATER RETURN	1	
9	09401-25406	CLIP	2	
10	18498-94J20	PROTECTOR, WATER HOSE	2	L:320->50
11	17712-88L00	HOSE (SEPARATOR TO INSP)	1	
12	09352-50903-600	HOSE (5X9X600)	1	L:600->500
13	09359-50901-980	HOSE	1	L:980->250
14	09401-08413	CLIP	4	
15	09401-10415	CLIP	1	
16	09408-00175	CLAMP	1	

FIG.162J

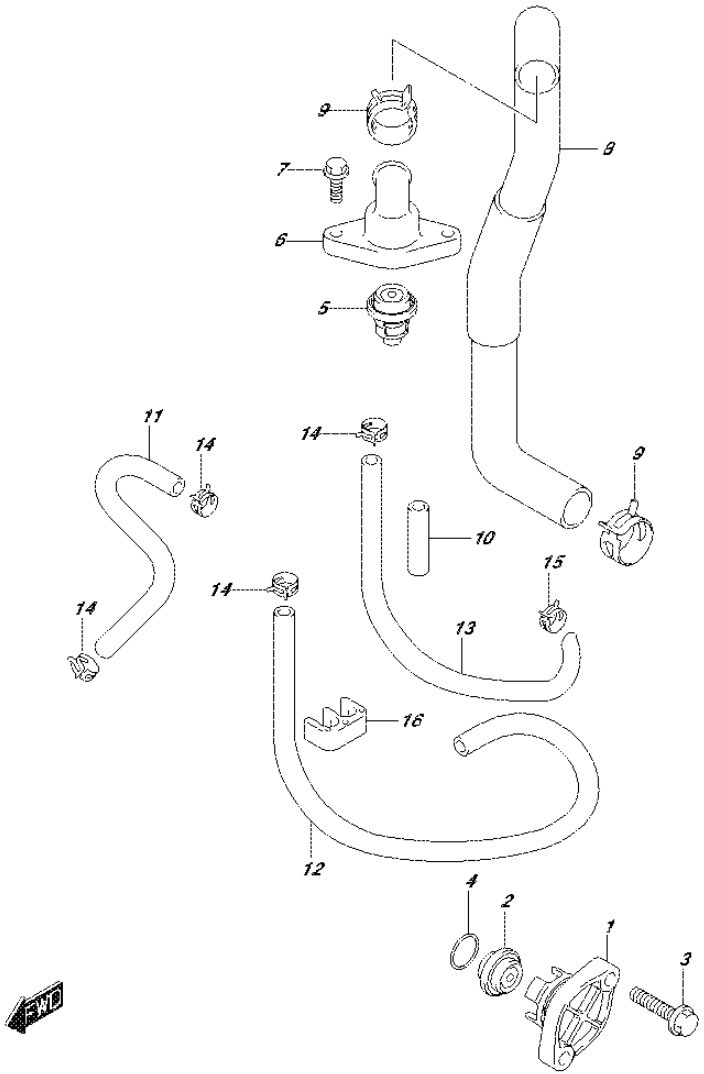

FIG.162J (1-I-9) THERMOSTAT (DF60AQH E01)

REF NO.	PART NO.	DESCRIPTION	Q'TY	REMARKS
1	17611-90J00-0EP	COVER, WATER PRESS VALVE (BLACK)	1	
2	17660-99E01	VALVE, WATER PRESSURE	1	
3	09116-06121	BOLT (6X25)	2	
4	09280-26006	O RING (D:3.1,ID:26.4)	1	
5	17670-93953	THERMOSTAT (60C)	1	
6	17681-88L00	COVER, THERMOSTAT	1	
7	01550-06207	BOLT	2	
8	11196-88L00	HOSE, WATER RETURN	1	
9	09401-25406	CLIP	2	
10	18498-94J20	PROTECTOR, WATER HOSE	2	L:320->50
11	17712-88L00	HOSE (SEPARATOR TO INSP)	1	
12	09352-50903-600	HOSE (5X9X600)	1	L:600->500
13	09359-50901-980	HOSE	1	L:980->250
14	09401-08413	CLIP	4	
15	09401-10415	CLIP	1	
16	09408-00175	CLAMP	1	

FIG.162K

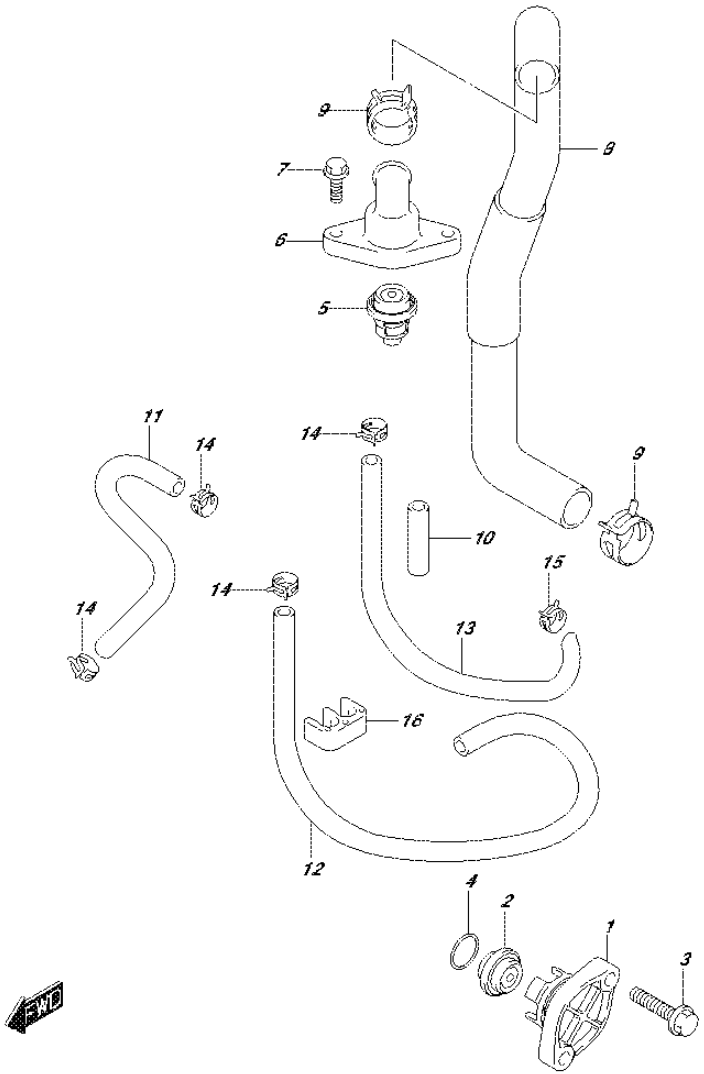

FIG.162K (1-I-10) THERMOSTAT (DF60AQH E40)

REF NO.	PART NO.	DESCRIPTION	Q'TY	REMARKS
1	17611-90J00-0EP	COVER, WATER PRESS VALVE (BLACK)	1	
2	17660-99E01	VALVE, WATER PRESSURE	1	
3	09116-06121	BOLT (6X25)	2	
4	09280-26006	O RING (D:3.1,ID:26.4)	1	
5	17670-93953	THERMOSTAT (60C)	1	
6	17681-88L00	COVER, THERMOSTAT	1	
7	01550-06207	BOLT	2	
8	11196-88L00	HOSE, WATER RETURN	1	
9	09401-25406	CLIP	2	
10	18498-94J20	PROTECTOR, WATER HOSE	2	L:320->50
11	17712-88L00	HOSE (SEPARATOR TO INSP)	1	
12	09352-50903-600	HOSE (5X9X600)	1	L:600->500
13	09359-50901-980	HOSE	1	L:980->250
14	09401-08413	CLIP	4	
15	09401-10415	CLIP	1	
16	09408-00175	CLAMP	1	

FIG.162L

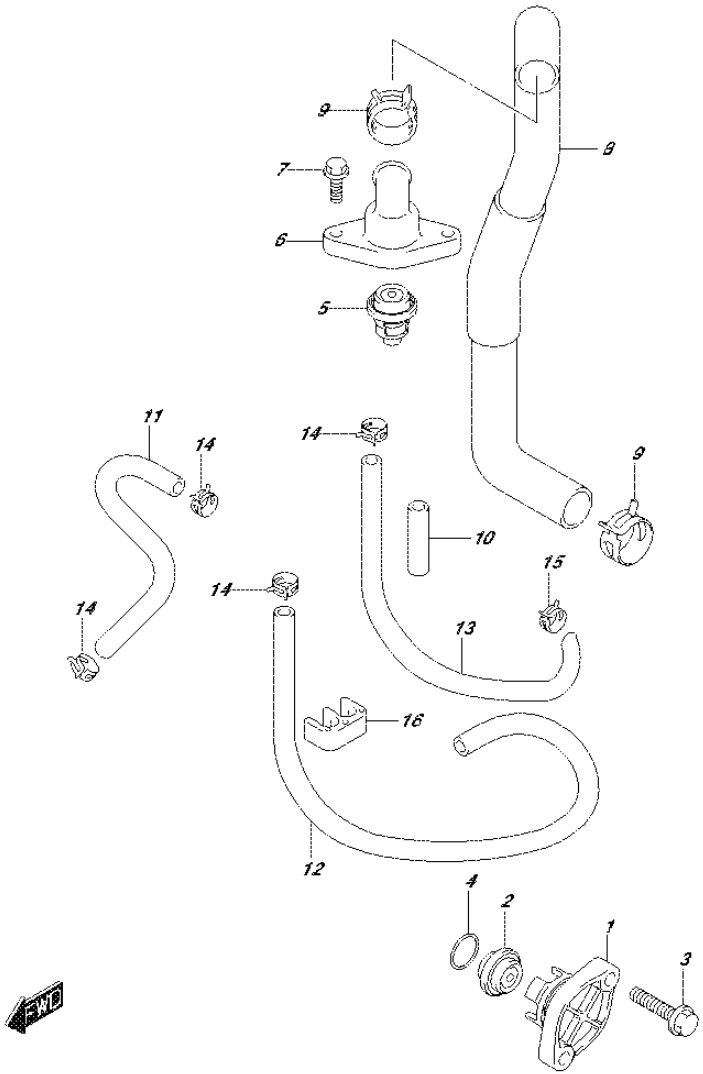

FIG.162L (1-I-11) THERMOSTAT (DF60ATH E01)

REF NO.	PART NO.	DESCRIPTION	Q'TY	REMARKS
1	17611-90J00-0EP	COVER, WATER PRESS VALVE (BLACK)	1	
2	17660-99E01	VALVE, WATER PRESSURE	1	
3	09116-06121	BOLT (6X25)	2	
4	09280-26006	O RING (D:3.1,ID:26.4)	1	
5	17670-93953	THERMOSTAT (60C)	1	
6	17681-88L00	COVER, THERMOSTAT	1	
7	01550-06207	BOLT	2	
8	11196-88L00	HOSE, WATER RETURN	1	
9	09401-25406	CLIP	2	
10	18498-94J20	PROTECTOR, WATER HOSE	2	L:320->50
11	17712-88L00	HOSE (SEPARATOR TO INSP)	1	
12	09352-50903-600	HOSE (5X9X600)	1	L:600->500
13	09359-50901-980	HOSE	1	L:980->250
14	09401-08413	CLIP	4	
15	09401-10415	CLIP	1	
16	09408-00175	CLAMP	1	

FIG.162M

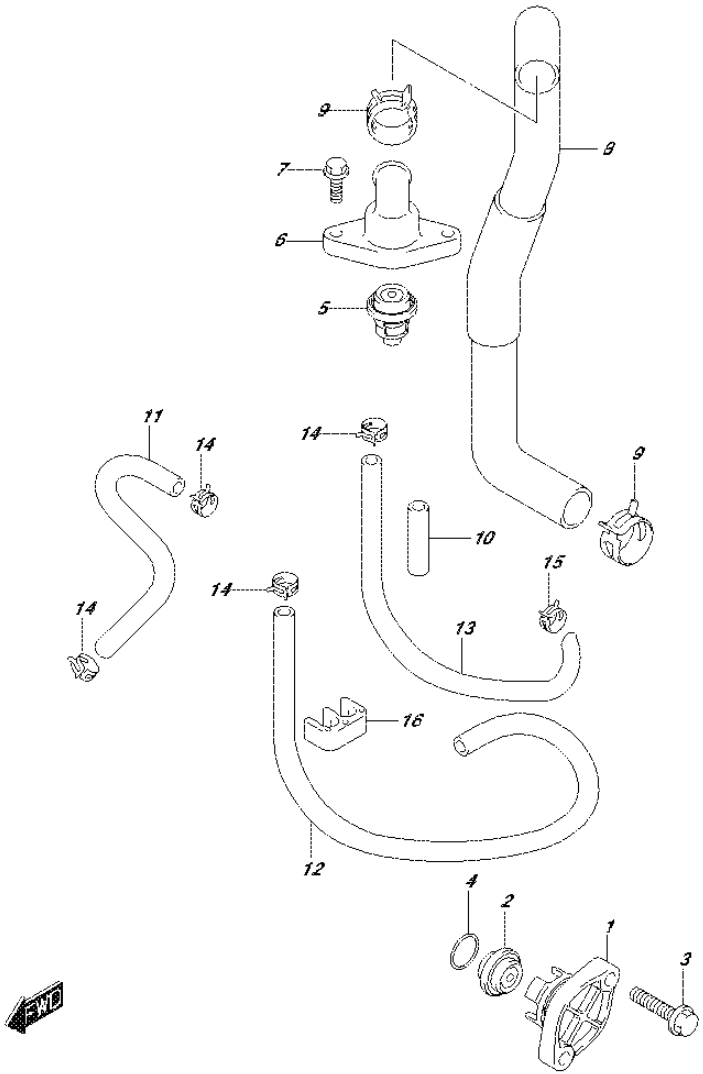

FIG.162M (1-I-12) THERMOSTAT (DF60ATH E40)

REF NO.	PART NO.	DESCRIPTION	Q'TY	REMARKS
1	17611-90J00-0EP	COVER, WATER PRESS VALVE (BLACK)	1	
2	17660-99E01	VALVE, WATER PRESSURE	1	
3	09116-06121	BOLT (6X25)	2	
4	09280-26006	O RING (D:3.1,ID:26.4)	1	
5	17670-93953	THERMOSTAT (60C)	1	
6	17681-88L00	COVER, THERMOSTAT	1	
7	01550-06207	BOLT	2	
8	11196-88L00	HOSE, WATER RETURN	1	
9	09401-25406	CLIP	2	
10	18498-94J20	PROTECTOR, WATER HOSE	2	L:320->50
11	17712-88L00	HOSE (SEPARATOR TO INSP)	1	
12	09352-50903-600	HOSE (5X9X600)	1	L:600->500
13	09359-50901-980	HOSE	1	L:980->250
14	09401-08413	CLIP	4	
15	09401-10415	CLIP	1	
16	09408-00175	CLAMP	1	

FIG.162N

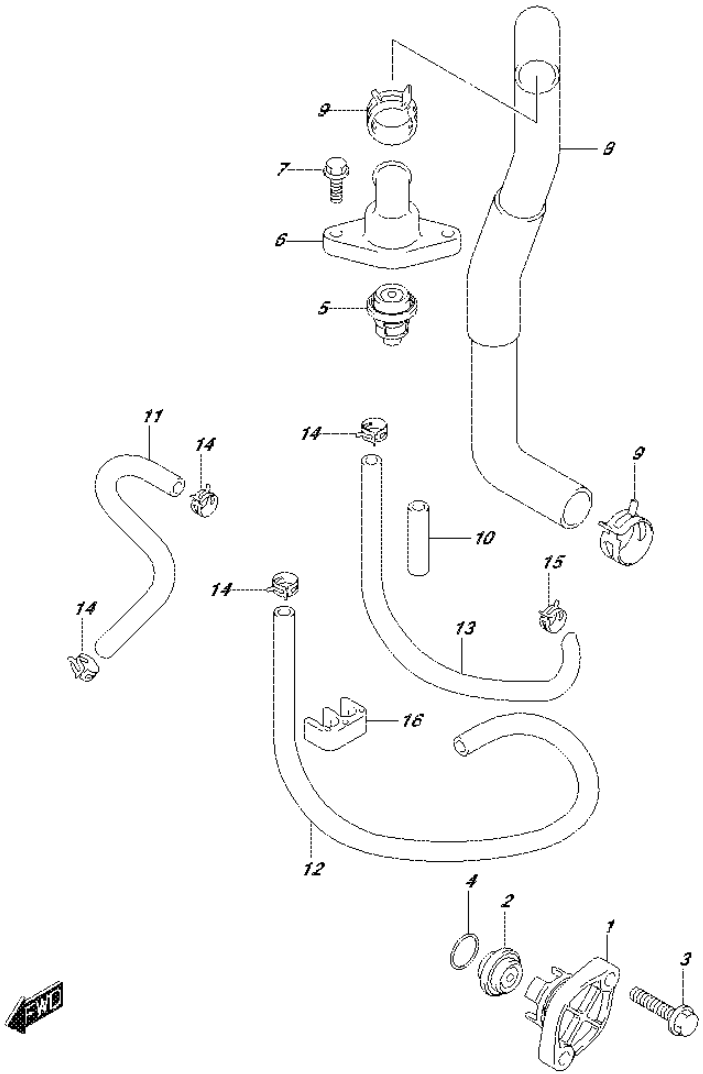

FIG.162N (1-I-13) THERMOSTAT (DF50AVT E01)

REF NO.	PART NO.	DESCRIPTION	Q'TY	REMARKS
1	17611-90J00-0EP	COVER, WATER PRESS VALVE (BLACK)	1	
2	17660-99E01	VALVE, WATER PRESSURE	1	
3	09116-06121	BOLT (6X25)	2	
4	09280-26006	O RING (D:3.1,ID:26.4)	1	
5	17670-93953	THERMOSTAT (60C)	1	
6	17681-88L00	COVER, THERMOSTAT	1	
7	01550-06207	BOLT	2	
8	11196-88L00	HOSE, WATER RETURN	1	
9	09401-25406	CLIP	2	
10	18498-94J20	PROTECTOR, WATER HOSE	2	L:320->50
11	17712-88L00	HOSE (SEPARATOR TO INSP)	1	
12	09352-50903-600	HOSE (5X9X600)	1	L:600->500
13	09359-50901-980	HOSE	1	L:980->250
14	09401-08413	CLIP	4	
15	09401-10415	CLIP	1	
16	09408-00175	CLAMP	1	

FIG.162P

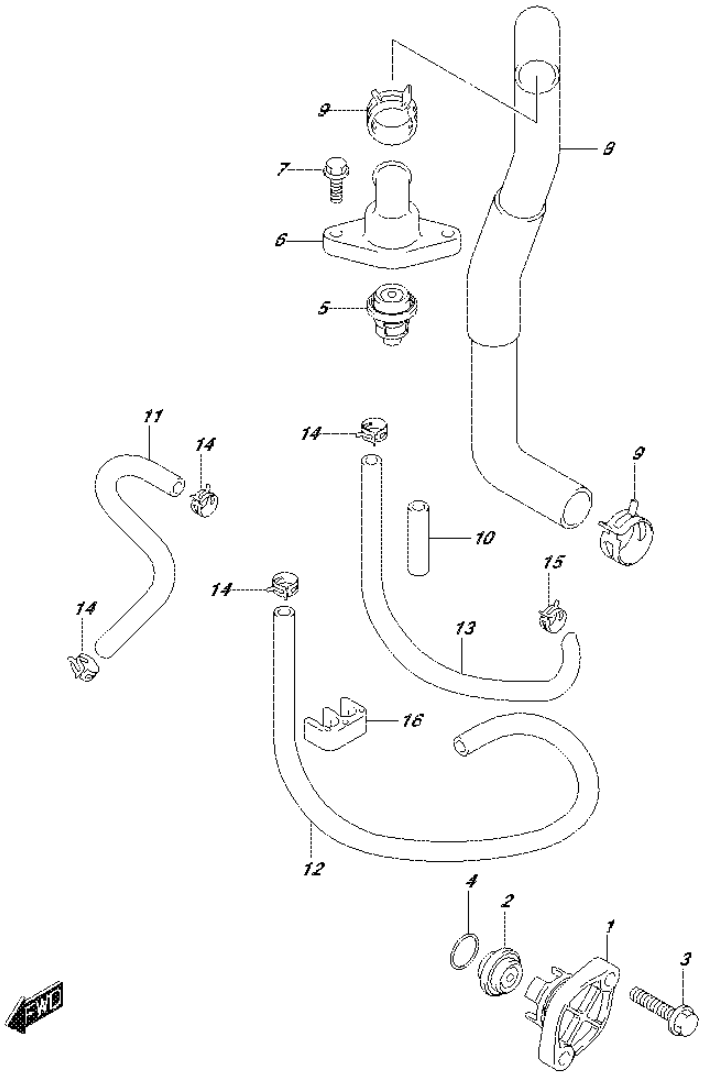

FIG.162P (1-I-14) THERMOSTAT (DF50AVTH E01)

REF NO.	PART NO.	DESCRIPTION	Q'TY	REMARKS
1	17611-90J00-0EP	COVER, WATER PRESS VALVE (BLACK)	1	
2	17660-99E01	VALVE, WATER PRESSURE	1	
3	09116-06121	BOLT (6X25)	2	
4	09280-26006	O RING (D:3.1,ID:26.4)	1	
5	17670-93953	THERMOSTAT (60C)	1	
6	17681-88L00	COVER, THERMOSTAT	1	
7	01550-06207	BOLT	2	
8	11196-88L00	HOSE, WATER RETURN	1	
9	09401-25406	CLIP	2	
10	18498-94J20	PROTECTOR, WATER HOSE	2	L:320->50
11	17712-88L00	HOSE (SEPARATOR TO INSP)	1	
12	09352-50903-600	HOSE (5X9X600)	1	L:600->500
13	09359-50901-980	HOSE	1	L:980->250
14	09401-08413	CLIP	4	
15	09401-10415	CLIP	1	
16	09408-00175	CLAMP	1	

FIG.162R

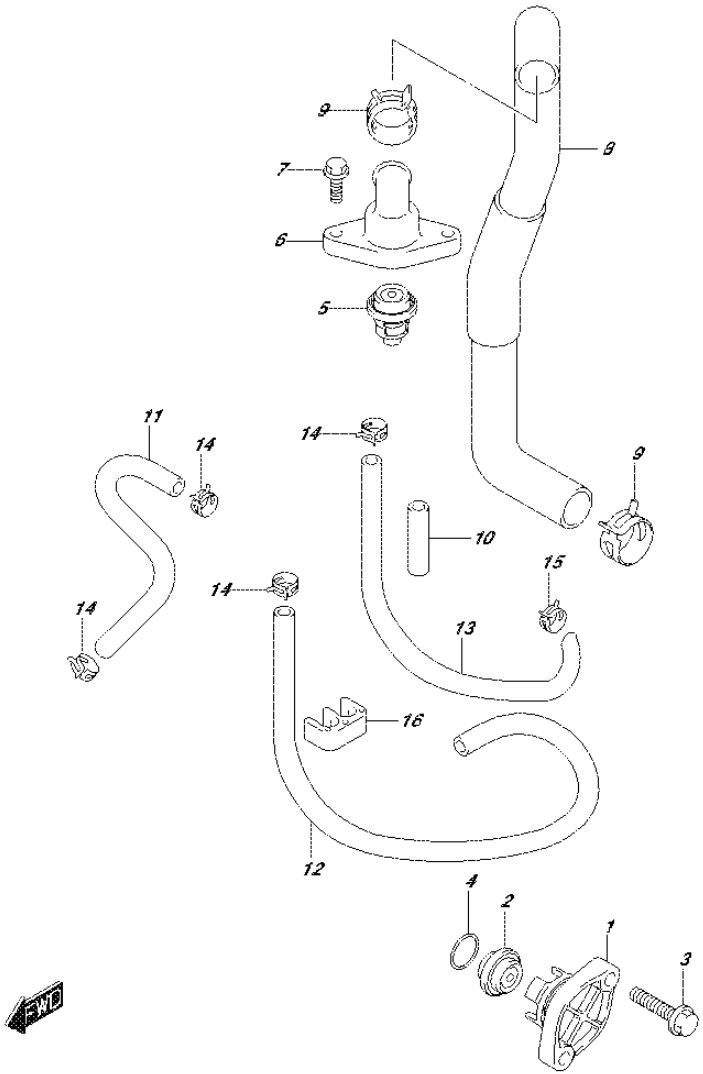

FIG.162R (1-I-15) THERMOSTAT (DF60AVT E01)

REF NO.	PART NO.	DESCRIPTION	Q'TY	REMARKS
1	17611-90J00-0EP	COVER, WATER PRESS VALVE (BLACK)	1	
2	17660-99E01	VALVE, WATER PRESSURE	1	
3	09116-06121	BOLT (6X25)	2	
4	09280-26006	O RING (D:3.1,ID:26.4)	1	
5	17670-93953	THERMOSTAT (60C)	1	
6	17681-88L00	COVER, THERMOSTAT	1	
7	01550-06207	BOLT	2	
8	11196-88L00	HOSE, WATER RETURN	1	
9	09401-25406	CLIP	2	
10	18498-94J20	PROTECTOR, WATER HOSE	2	L:320->50
11	17712-88L00	HOSE (SEPARATOR TO INSP)	1	
12	09352-50903-600	HOSE (5X9X600)	1	L:600->500
13	09359-50901-980	HOSE	1	L:980->250
14	09401-08413	CLIP	4	
15	09401-10415	CLIP	1	
16	09408-00175	CLAMP	1	

FIG.162S

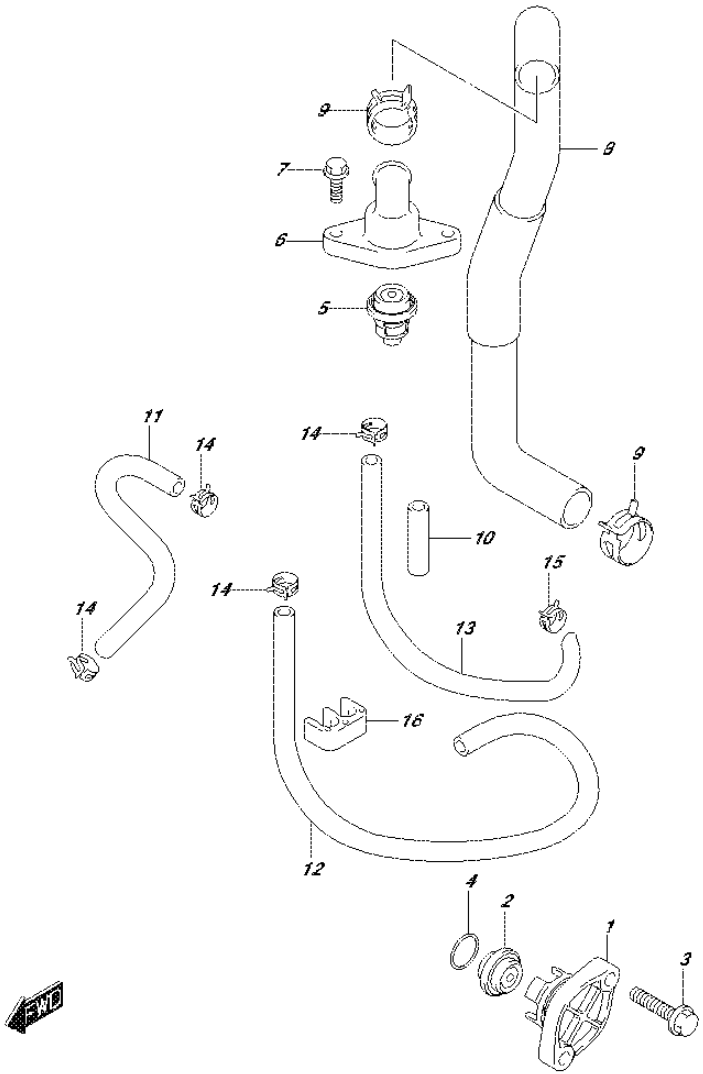

FIG.162S (1-J-2) THERMOSTAT (DF60AVT E40)

REF NO.	PART NO.	DESCRIPTION	Q'TY	REMARKS
1	17611-90J00-0EP	COVER, WATER PRESS VALVE (BLACK)	1	
2	17660-99E01	VALVE, WATER PRESSURE	1	
3	09116-06121	BOLT (6X25)	2	
4	09280-26006	O RING (D:3.1,ID:26.4)	1	
5	17670-93953	THERMOSTAT (60C)	1	
6	17681-88L00	COVER, THERMOSTAT	1	
7	01550-06207	BOLT	2	
8	11196-88L00	HOSE, WATER RETURN	1	
9	09401-25406	CLIP	2	
10	18498-94J20	PROTECTOR, WATER HOSE	2	L:320->50
11	17712-88L00	HOSE (SEPARATOR TO INSP)	1	
12	09352-50903-600	HOSE (5X9X600)	1	L:600->500
13	09359-50901-980	HOSE	1	L:980->250
14	09401-08413	CLIP	4	
15	09401-10415	CLIP	1	
16	09408-00175	CLAMP	1	

FIG.162T

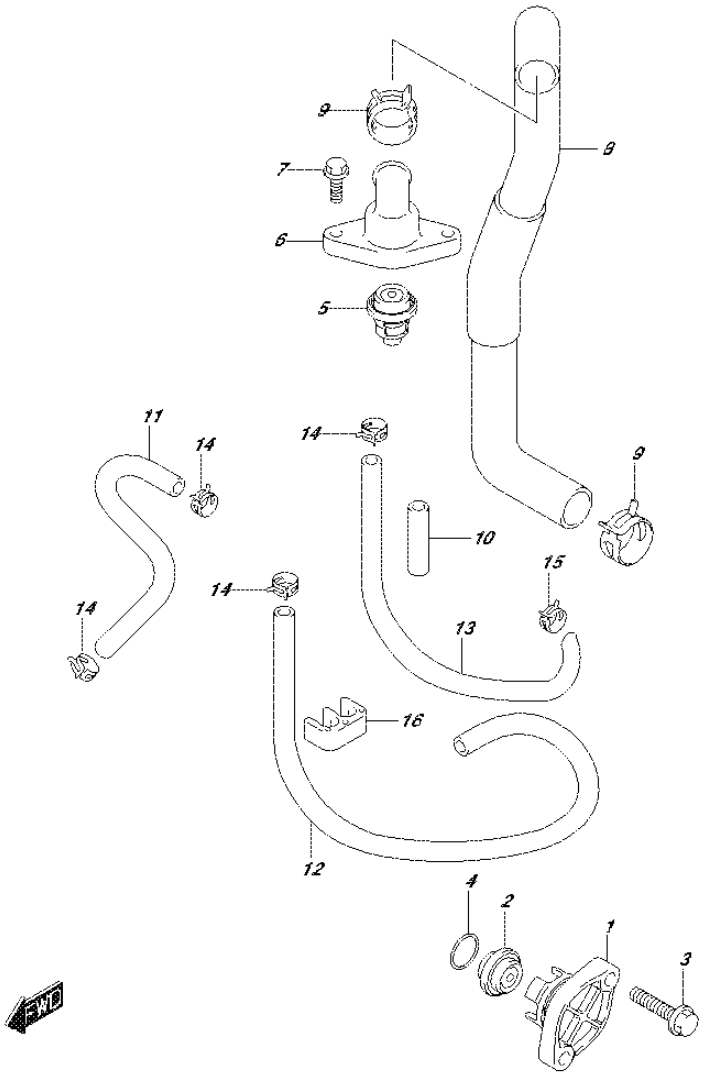

FIG.162T (1-J-3) THERMOSTAT (DF60AVTH E01)

REF NO.	PART NO.	DESCRIPTION	Q'TY	REMARKS
1	17611-90J00-0EP	COVER, WATER PRESS VALVE (BLACK)	1	
2	17660-99E01	VALVE, WATER PRESSURE	1	
3	09116-06121	BOLT (6X25)	2	
4	09280-26006	O RING (D:3.1,ID:26.4)	1	
5	17670-93953	THERMOSTAT (60C)	1	
6	17681-88L00	COVER, THERMOSTAT	1	
7	01550-06207	BOLT	2	
8	11196-88L00	HOSE, WATER RETURN	1	
9	09401-25406	CLIP	2	
10	18498-94J20	PROTECTOR, WATER HOSE	2	L:320->50
11	17712-88L00	HOSE (SEPARATOR TO INSP)	1	
12	09352-50903-600	HOSE (5X9X600)	1	L:600->500
13	09359-50901-980	HOSE	1	L:980->250
14	09401-08413	CLIP	4	
15	09401-10415	CLIP	1	
16	09408-00175	CLAMP	1	

FIG.162U

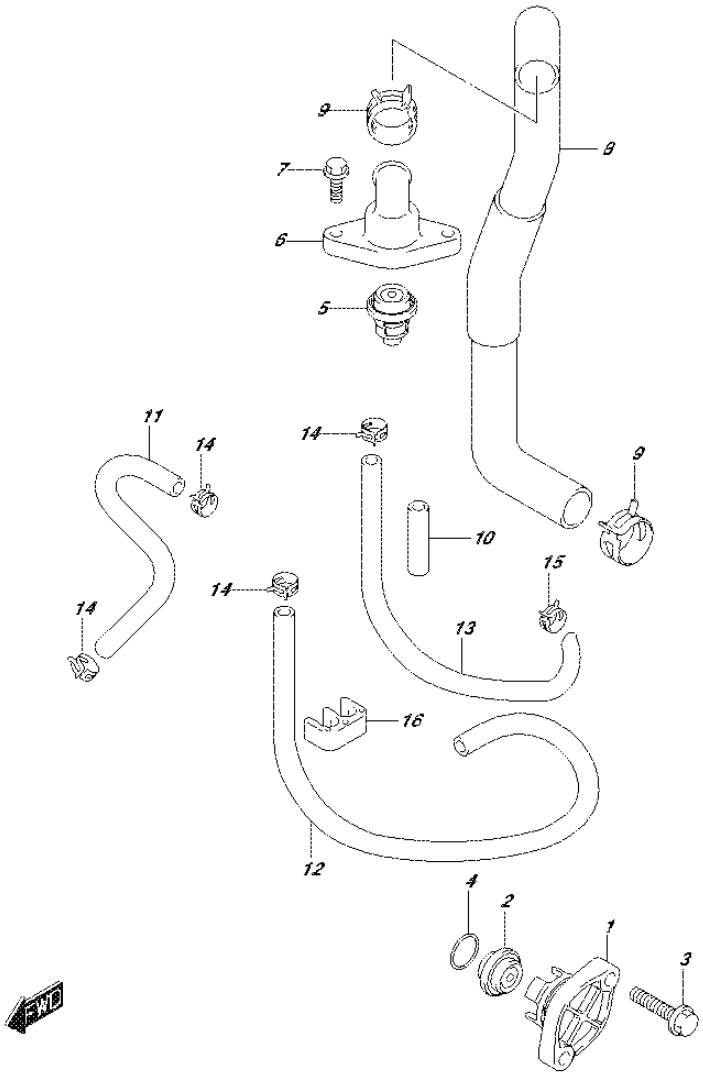

FIG.162U (1-J-4) THERMOSTAT (DF60AVTH E40)

REF NO.	PART NO.	DESCRIPTION	Q'TY	REMARKS
1	17611-90J00-0EP	COVER, WATER PRESS VALVE (BLACK)	1	
2	17660-99E01	VALVE, WATER PRESSURE	1	
3	09116-06121	BOLT (6X25)	2	
4	09280-26006	O RING (D:3.1,ID:26.4)	1	
5	17670-93953	THERMOSTAT (60C)	1	
6	17681-88L00	COVER, THERMOSTAT	1	
7	01550-06207	BOLT	2	
8	11196-88L00	HOSE, WATER RETURN	1	
9	09401-25406	CLIP	2	
10	18498-94J20	PROTECTOR, WATER HOSE	2	L:320->50
11	17712-88L00	HOSE (SEPARATOR TO INSP)	1	
12	09352-50903-600	HOSE (5X9X600)	1	L:600->500
13	09359-50901-980	HOSE	1	L:980->250
14	09401-08413	CLIP	4	
15	09401-10415	CLIP	1	
16	09408-00175	CLAMP	1	

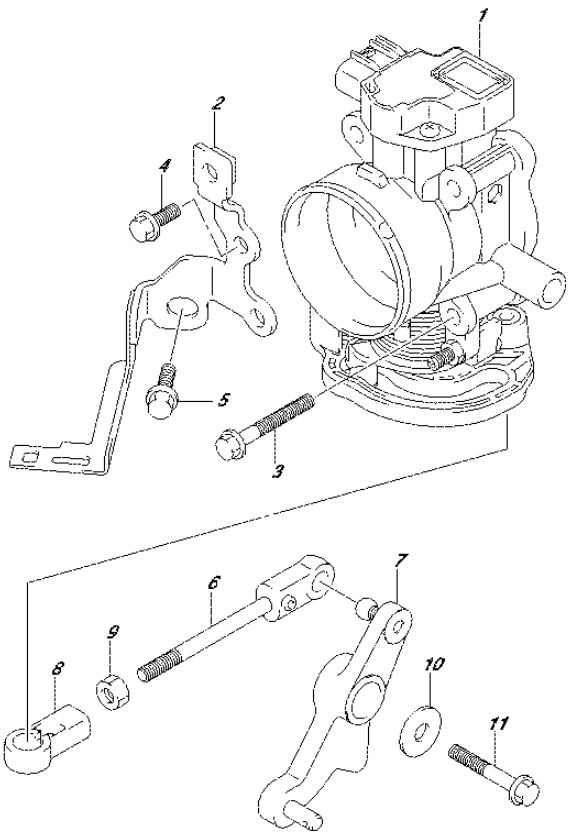

FIG.163A (1-J-5) THROTTLE BODY (DF40A E01)

REF NO.	PART NO.	DESCRIPTION	Q'TY	REMARKS
1	13300-88L01	BODY ASSY, THROTTLE	1	
2	13315-88L00	BRACKET, THROTTLE BODY	1	
3	01550-06457	BOLT	4	
4	01550-06167	BOLT	2	
5	01550-08207	BOLT	1	
6	13510-88L00	ROD, THROTTLE	1	
7	19120-88L01	LEVER, THROTTLE	1	
8	19131-95502	CONNECTOR, THROTTLE ROD	1	
9	09140-05005	NUT	1	
10	09160-06047	WASHER (6.5X20X2)	1	
11	01550-06407	BOLT	1	

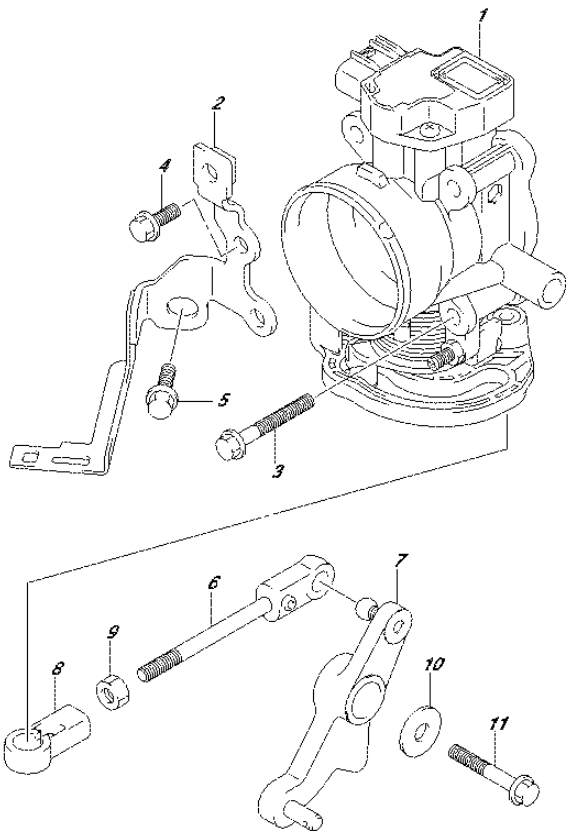

FIG.163B (1-J-6) THROTTLE BODY (DF40AQH E01)

REF NO.	PART NO.	DESCRIPTION	Q'TY	REMARKS
1	13300-88L01	BODY ASSY, THROTTLE	1	
2	13315-88L00	BRACKET, THROTTLE BODY	1	
3	01550-06457	BOLT	4	
4	01550-06167	BOLT	2	
5	01550-08207	BOLT	1	
6	13510-88L00	ROD, THROTTLE	1	
7	19120-88L11	LEVER, THROTTLE	1	
8	19131-95502	CONNECTOR, THROTTLE ROD	1	
9	09140-05005	NUT	1	
10	09160-06047	WASHER (6.5X20X2)	1	
11	01550-06407	BOLT	1	

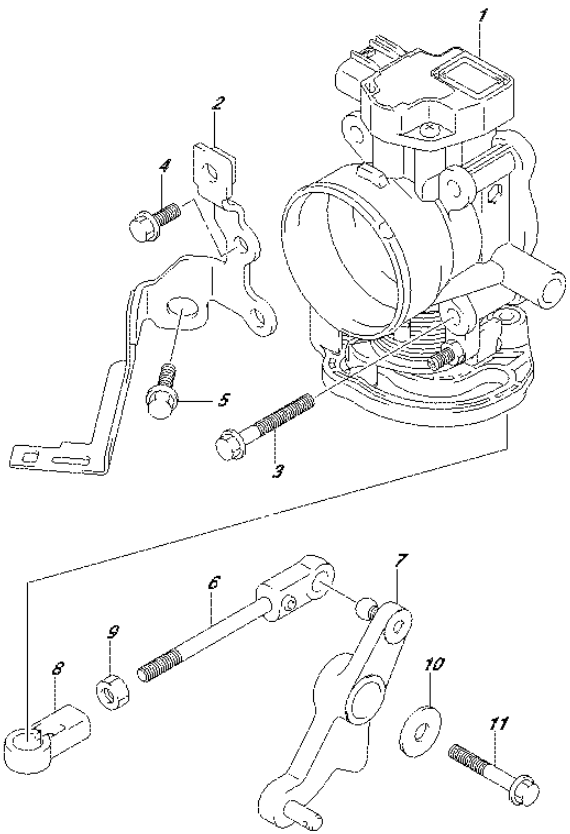

FIG.163C (1-J-7) THROTTLE BODY (DF40ATH E01)

REF NO.	PART NO.	DESCRIPTION	Q'TY	REMARKS
1	13300-88L01	BODY ASSY, THROTTLE	1	
2	13315-88L00	BRACKET, THROTTLE BODY	1	
3	01550-06457	BOLT	4	
4	01550-06167	BOLT	2	
5	01550-08207	BOLT	1	
6	13510-88L00	ROD, THROTTLE	1	
7	19120-88L11	LEVER, THROTTLE	1	
8	19131-95502	CONNECTOR, THROTTLE ROD	1	
9	09140-05005	NUT	1	
10	09160-06047	WASHER (6.5X20X2)	1	
11	01550-06407	BOLT	1	

FIG.163D

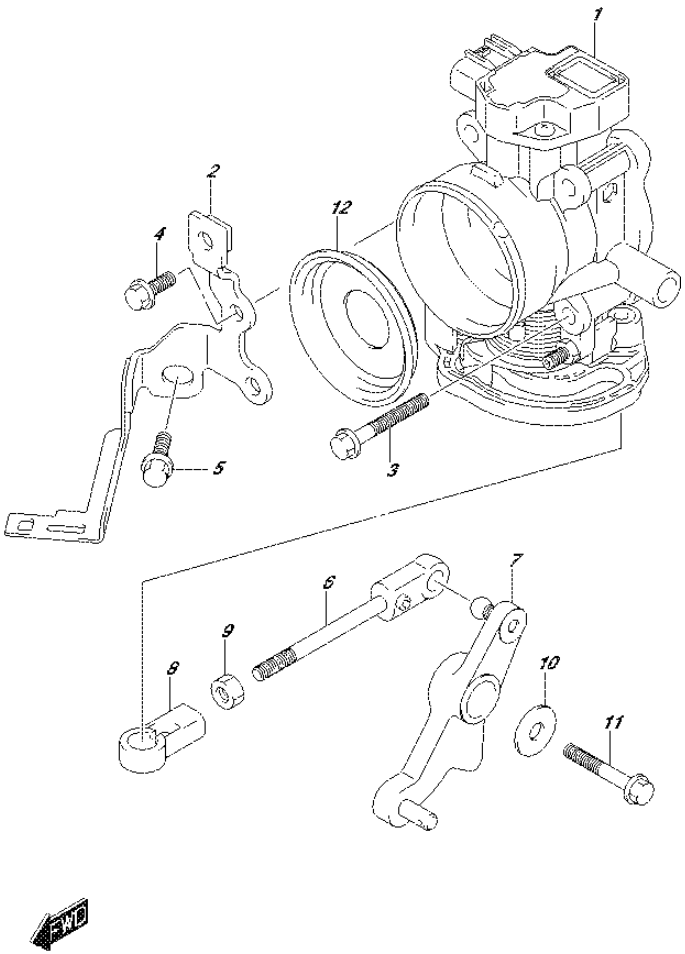

FIG.163D (1-J-8) THROTTLE BODY (DF40AST E34)

REF NO.	PART NO.	DESCRIPTION	Q'TY	REMARKS
1	13300-88L01	BODY ASSY, THROTTLE	1	
2	13315-88L00	BRACKET, THROTTLE BODY	1	
3	01550-06457	BOLT	4	
4	01550-06167	BOLT	2	
5	01550-08207	BOLT	1	
6	13510-88L00	ROD, THROTTLE	1	
7	19120-88L01	LEVER, THROTTLE	1	
8	19131-95502	CONNECTOR, THROTTLE ROD	1	
9	09140-05005	NUT	1	
10	09160-06047	WASHER (6.5X20X2)	1	
11	01550-06407	BOLT	1	
12	13815-88L00	RESTRICTOR, INTAKE	1	

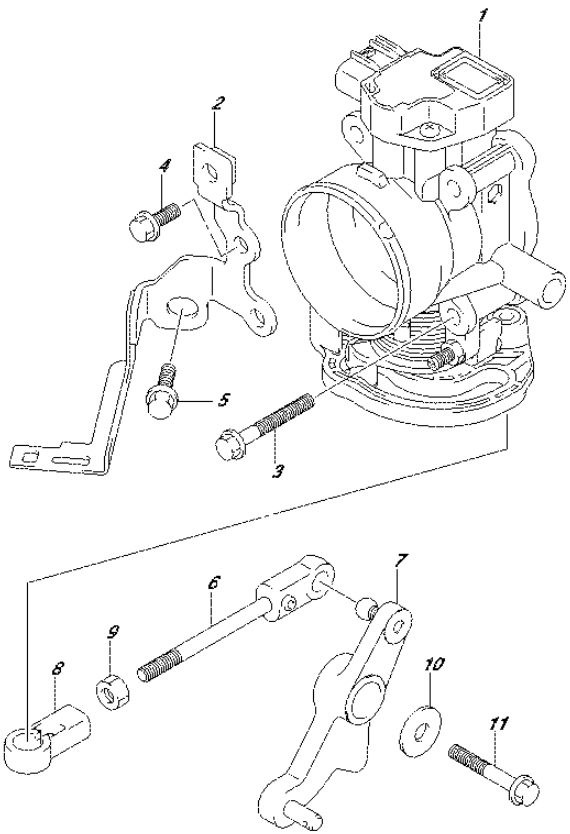

FIG.163E (1-J-9) THROTTLE BODY (DF50A E01)

REF NO.	PART NO.	DESCRIPTION	Q'TY	REMARKS
1	13300-88L01	BODY ASSY, THROTTLE	1	
2	13315-88L00	BRACKET, THROTTLE BODY	1	
3	01550-06457	BOLT	4	
4	01550-06167	BOLT	2	
5	01550-08207	BOLT	1	
6	13510-88L00	ROD, THROTTLE	1	
7	19120-88L01	LEVER, THROTTLE	1	
8	19131-95502	CONNECTOR, THROTTLE ROD	1	
9	09140-05005	NUT	1	
10	09160-06047	WASHER (6.5X20X2)	1	
11	01550-06407	BOLT	1	

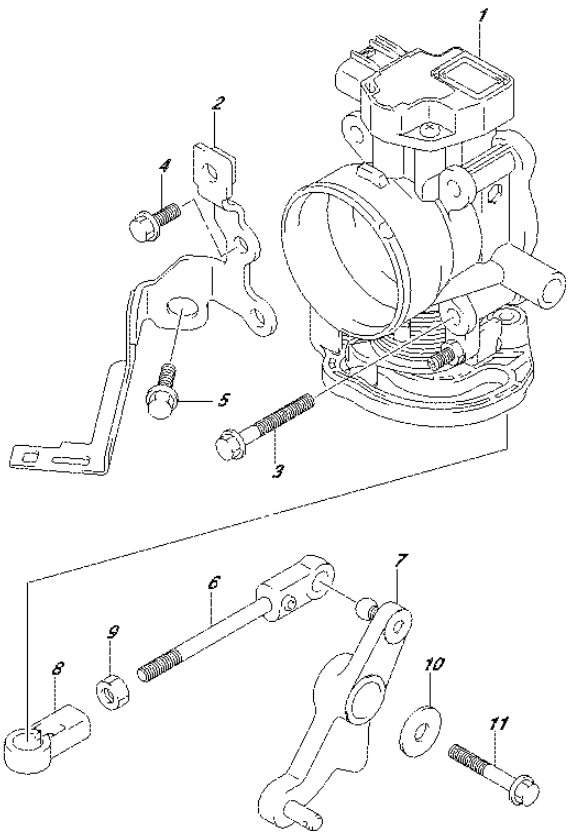

FIG.163F (1-J-10) THROTTLE BODY (DF50ATH E01)

REF NO.	PART NO.	DESCRIPTION	Q'TY	REMARKS
1	13300-88L01	BODY ASSY, THROTTLE	1	
2	13315-88L00	BRACKET, THROTTLE BODY	1	
3	01550-06457	BOLT	4	
4	01550-06167	BOLT	2	
5	01550-08207	BOLT	1	
6	13510-88L00	ROD, THROTTLE	1	
7	19120-88L11	LEVER, THROTTLE	1	
8	19131-95502	CONNECTOR, THROTTLE ROD	1	
9	09140-05005	NUT	1	
10	09160-06047	WASHER (6.5X20X2)	1	
11	01550-06407	BOLT	1	

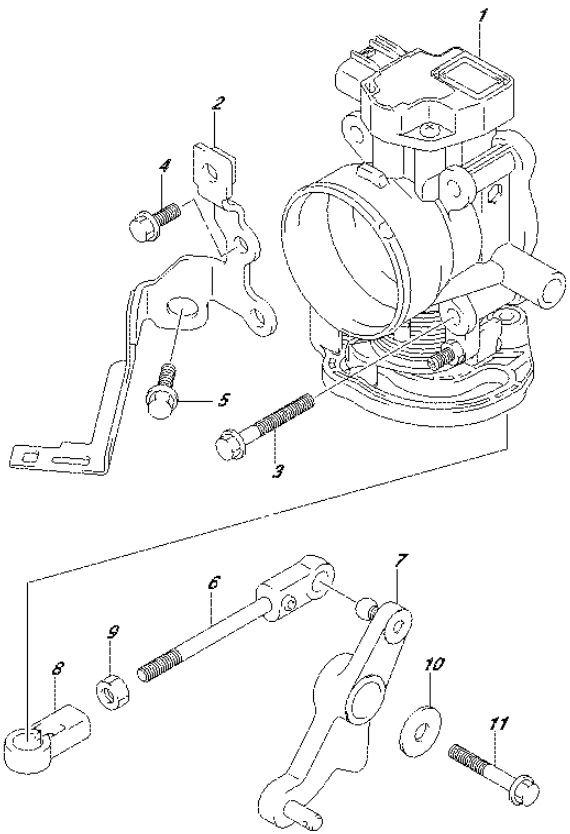

FIG.163G (1-J-11) THROTTLE BODY (DF60A E01)

REF NO.	PART NO.	DESCRIPTION	Q'TY	REMARKS
1	13300-88L01	BODY ASSY, THROTTLE	1	
2	13315-88L00	BRACKET, THROTTLE BODY	1	
3	01550-06457	BOLT	4	
4	01550-06167	BOLT	2	
5	01550-08207	BOLT	1	
6	13510-88L00	ROD, THROTTLE	1	
7	19120-88L01	LEVER, THROTTLE	1	
8	19131-95502	CONNECTOR, THROTTLE ROD	1	
9	09140-05005	NUT	1	
10	09160-06047	WASHER (6.5X20X2)	1	
11	01550-06407	BOLT	1	

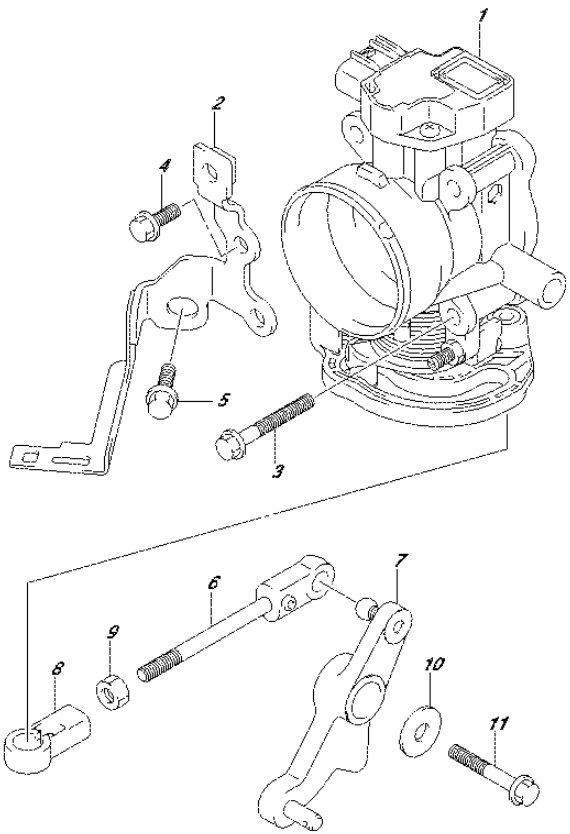

FIG.163H (1-J-12) THROTTLE BODY (DF60A E40)

REF NO.	PART NO.	DESCRIPTION	Q'TY	REMARKS
1	13300-88L01	BODY ASSY, THROTTLE	1	
2	13315-88L00	BRACKET, THROTTLE BODY	1	
3	01550-06457	BOLT	4	
4	01550-06167	BOLT	2	
5	01550-08207	BOLT	1	
6	13510-88L00	ROD, THROTTLE	1	
7	19120-88L01	LEVER, THROTTLE	1	
8	19131-95502	CONNECTOR, THROTTLE ROD	1	
9	09140-05005	NUT	1	
10	09160-06047	WASHER (6.5X20X2)	1	
11	01550-06407	BOLT	1	

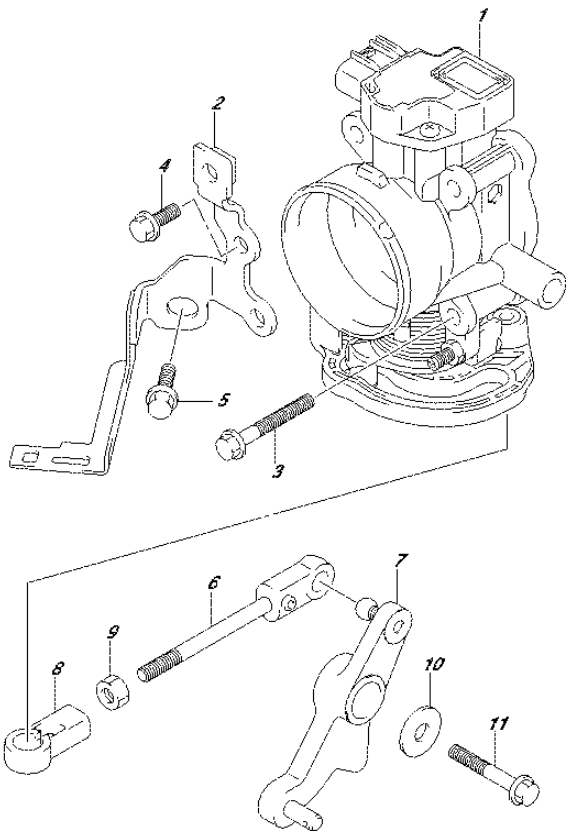

FIG.163J (1-J-13) THROTTLE BODY (DF60AQH E01)

REF NO.	PART NO.	DESCRIPTION	Q'TY	REMARKS
1	13300-88L01	BODY ASSY, THROTTLE	1	
2	13315-88L00	BRACKET, THROTTLE BODY	1	
3	01550-06457	BOLT	4	
4	01550-06167	BOLT	2	
5	01550-08207	BOLT	1	
6	13510-88L00	ROD, THROTTLE	1	
7	19120-88L11	LEVER, THROTTLE	1	
8	19131-95502	CONNECTOR, THROTTLE ROD	1	
9	09140-05005	NUT	1	
10	09160-06047	WASHER (6.5X20X2)	1	
11	01550-06407	BOLT	1	

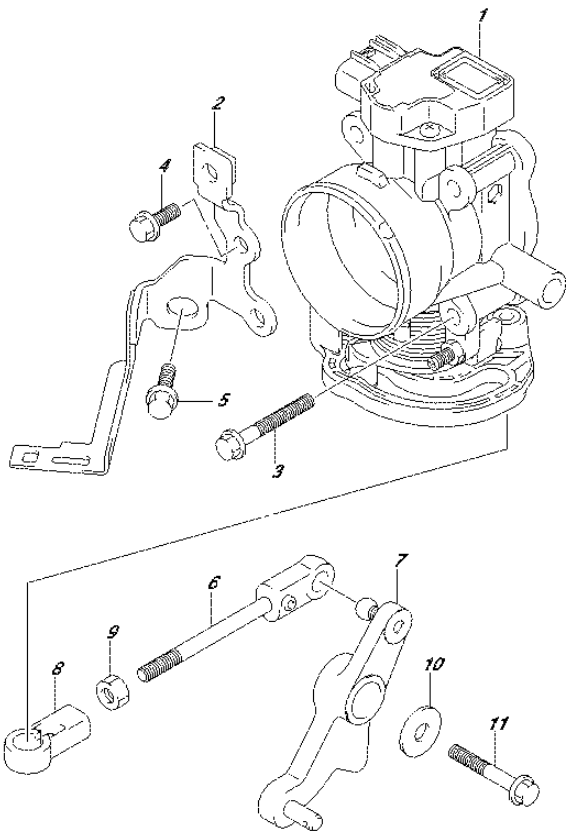

FIG.163K (1-J-14) THROTTLE BODY (DF60AQH E40)

REF NO.	PART NO.	DESCRIPTION	Q'TY	REMARKS
1	13300-88L01	BODY ASSY, THROTTLE	1	
2	13315-88L00	BRACKET, THROTTLE BODY	1	
3	01550-06457	BOLT	4	
4	01550-06167	BOLT	2	
5	01550-08207	BOLT	1	
6	13510-88L00	ROD, THROTTLE	1	
7	19120-88L11	LEVER, THROTTLE	1	
8	19131-95502	CONNECTOR, THROTTLE ROD	1	
9	09140-05005	NUT	1	
10	09160-06047	WASHER (6.5X20X2)	1	
11	01550-06407	BOLT	1	

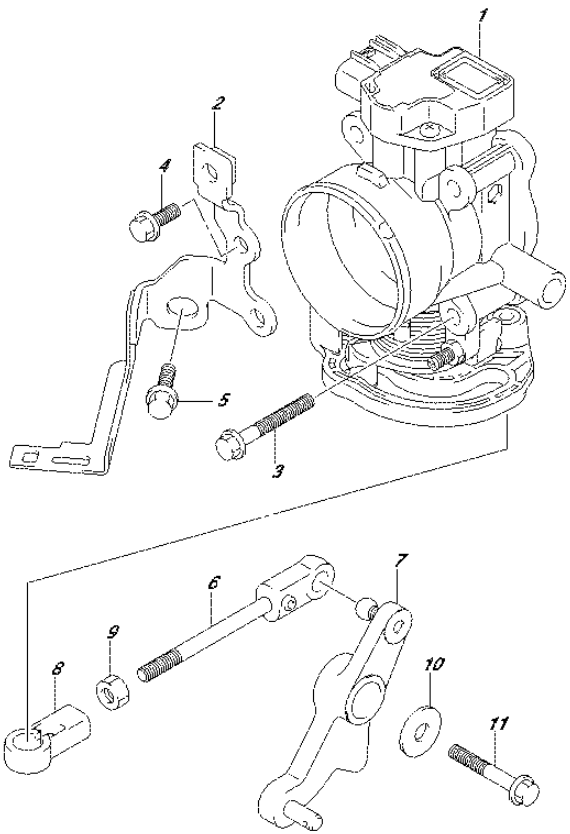

FIG.163L (1-J-15) THROTTLE BODY (DF60ATH E01)

REF NO.	PART NO.	DESCRIPTION	Q'TY	REMARKS
1	13300-88L01	BODY ASSY, THROTTLE	1	
2	13315-88L00	BRACKET, THROTTLE BODY	1	
3	01550-06457	BOLT	4	
4	01550-06167	BOLT	2	
5	01550-08207	BOLT	1	
6	13510-88L00	ROD, THROTTLE	1	
7	19120-88L11	LEVER, THROTTLE	1	
8	19131-95502	CONNECTOR, THROTTLE ROD	1	
9	09140-05005	NUT	1	
10	09160-06047	WASHER (6.5X20X2)	1	
11	01550-06407	BOLT	1	

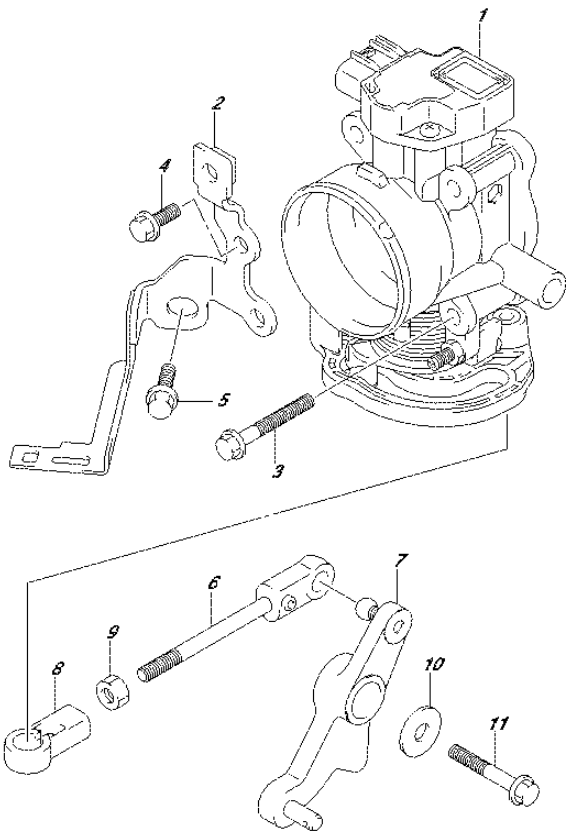

FIG.163M (1-K-2) THROTTLE BODY (DF60ATH E40)

REF NO.	PART NO.	DESCRIPTION	Q'TY	REMARKS
1	13300-88L01	BODY ASSY, THROTTLE	1	
2	13315-88L00	BRACKET, THROTTLE BODY	1	
3	01550-06457	BOLT	4	
4	01550-06167	BOLT	2	
5	01550-08207	BOLT	1	
6	13510-88L00	ROD, THROTTLE	1	
7	19120-88L11	LEVER, THROTTLE	1	
8	19131-95502	CONNECTOR, THROTTLE ROD	1	
9	09140-05005	NUT	1	
10	09160-06047	WASHER (6.5X20X2)	1	
11	01550-06407	BOLT	1	

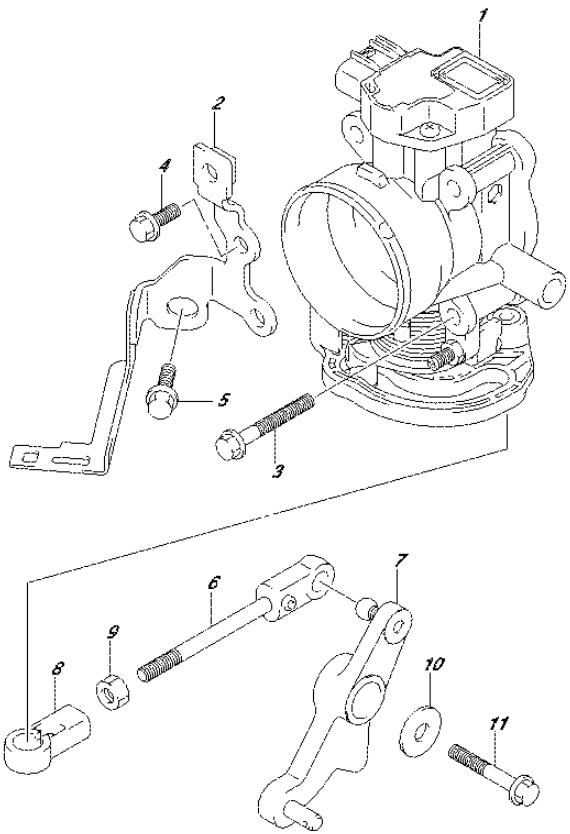

FIG.163N (1-K-3) THROTTLE BODY (DF50AVT E01)

REF NO.	PART NO.	DESCRIPTION	Q'TY	REMARKS
1	13300-88L01	BODY ASSY, THROTTLE	1	
2	13315-88L00	BRACKET, THROTTLE BODY	1	
3	01550-06457	BOLT	4	
4	01550-06167	BOLT	2	
5	01550-08207	BOLT	1	
6	13510-88L00	ROD, THROTTLE	1	
7	19120-88L01	LEVER, THROTTLE	1	
8	19131-95502	CONNECTOR, THROTTLE ROD	1	
9	09140-05005	NUT	1	
10	09160-06047	WASHER (6.5X20X2)	1	
11	01550-06407	BOLT	1	

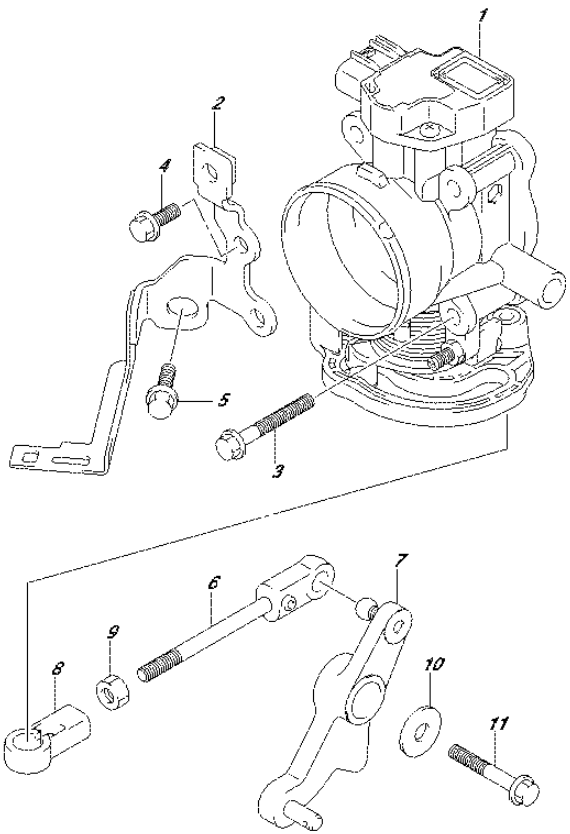

FIG.163P (1-K-4) THROTTLE BODY (DF50AVTH E01)

REF NO.	PART NO.	DESCRIPTION	Q'TY	REMARKS
1	13300-88L01	BODY ASSY, THROTTLE	1	
2	13315-88L00	BRACKET, THROTTLE BODY	1	
3	01550-06457	BOLT	4	
4	01550-06167	BOLT	2	
5	01550-08207	BOLT	1	
6	13510-88L00	ROD, THROTTLE	1	
7	19120-88L11	LEVER, THROTTLE	1	
8	19131-95502	CONNECTOR, THROTTLE ROD	1	
9	09140-05005	NUT	1	
10	09160-06047	WASHER (6.5X20X2)	1	
11	01550-06407	BOLT	1	

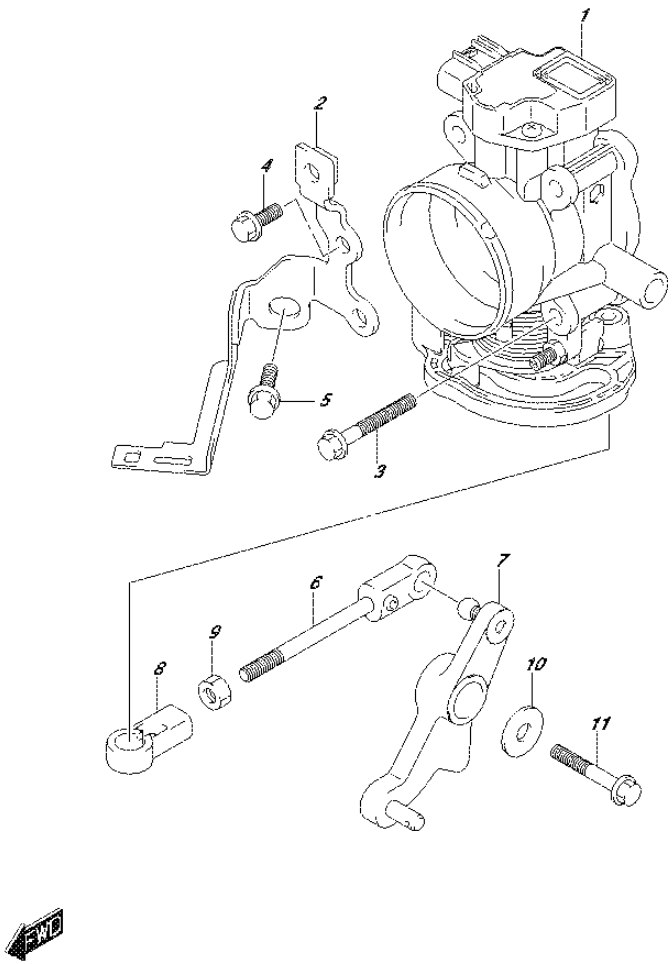

FIG.163R (1-K-5) THROTTLE BODY (DF60AVT E01)

REF NO.	PART NO.	DESCRIPTION	Q'TY	REMARKS
1	13300-88L01	BODY ASSY, THROTTLE	1	
2	13315-88L00	BRACKET, THROTTLE BODY	1	
3	01550-06457	BOLT	4	
4	01550-06167	BOLT	2	
5	01550-08207	BOLT	1	
6	13510-88L00	ROD, THROTTLE	1	
7	19120-88L01	LEVER, THROTTLE	1	
8	19131-95502	CONNECTOR, THROTTLE ROD	1	
9	09140-05005	NUT	1	
10	09160-06047	WASHER (6.5X20X2)	1	
11	01550-06407	BOLT	1	

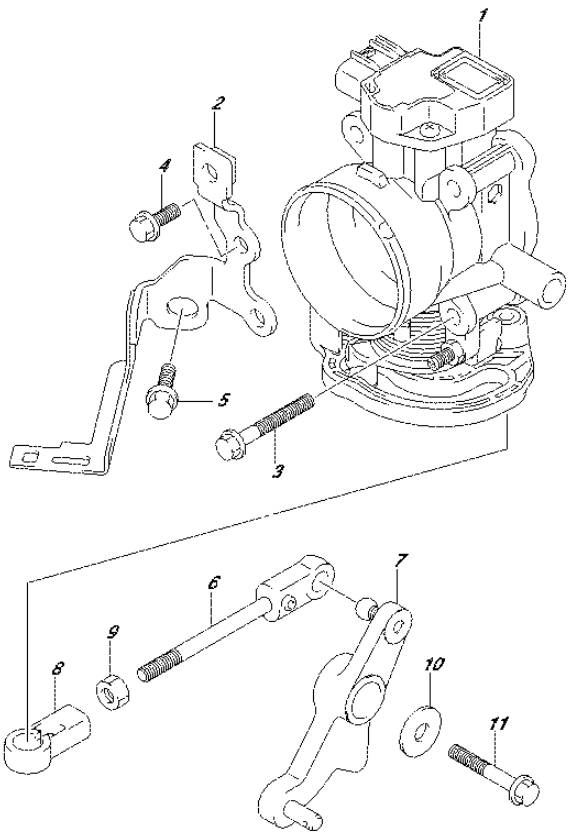

FIG.163S (1-K-6) THROTTLE BODY (DF60AVT E40)

REF NO.	PART NO.	DESCRIPTION	Q'TY	REMARKS
1	13300-88L01	BODY ASSY, THROTTLE	1	
2	13315-88L00	BRACKET, THROTTLE BODY	1	
3	01550-06457	BOLT	4	
4	01550-06167	BOLT	2	
5	01550-08207	BOLT	1	
6	13510-88L00	ROD, THROTTLE	1	
7	19120-88L01	LEVER, THROTTLE	1	
8	19131-95502	CONNECTOR, THROTTLE ROD	1	
9	09140-05005	NUT	1	
10	09160-06047	WASHER (6.5X20X2)	1	
11	01550-06407	BOLT	1	

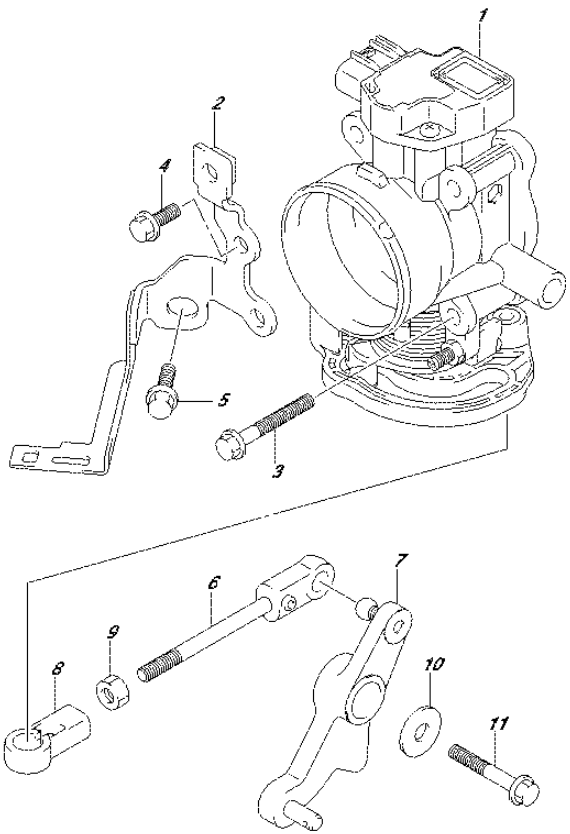

FIG.163T (1-K-7) THROTTLE BODY (DF60AVTH E01)

REF NO.	PART NO.	DESCRIPTION	Q'TY	REMARKS
1	13300-88L01	BODY ASSY, THROTTLE	1	
2	13315-88L00	BRACKET, THROTTLE BODY	1	
3	01550-06457	BOLT	4	
4	01550-06167	BOLT	2	
5	01550-08207	BOLT	1	
6	13510-88L00	ROD, THROTTLE	1	
7	19120-88L11	LEVER, THROTTLE	1	
8	19131-95502	CONNECTOR, THROTTLE ROD	1	
9	09140-05005	NUT	1	
10	09160-06047	WASHER (6.5X20X2)	1	
11	01550-06407	BOLT	1	

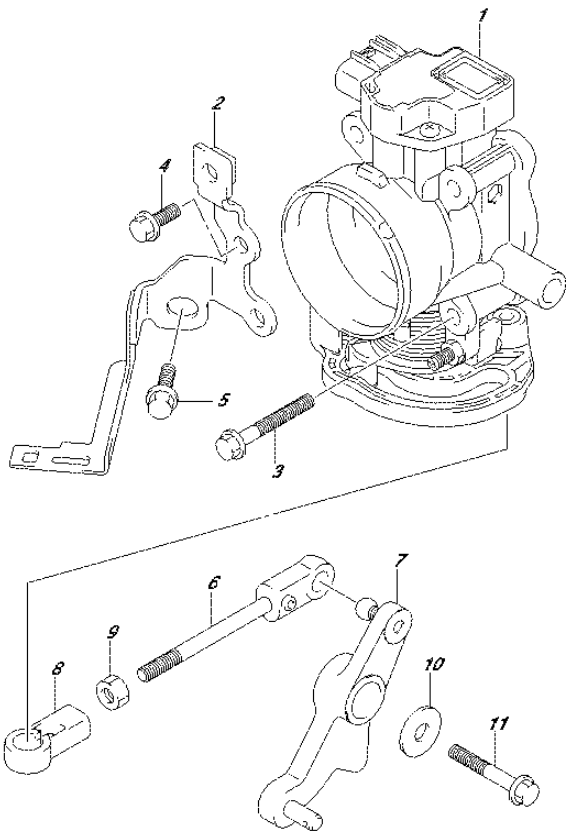

FIG.163U (1-K-8) THROTTLE BODY (DF60AVTH E40)

REF NO.	PART NO.	DESCRIPTION	Q'TY	REMARKS
1	13300-88L01	BODY ASSY, THROTTLE	1	
2	13315-88L00	BRACKET, THROTTLE BODY	1	
3	01550-06457	BOLT	4	
4	01550-06167	BOLT	2	
5	01550-08207	BOLT	1	
6	13510-88L00	ROD, THROTTLE	1	
7	19120-88L11	LEVER, THROTTLE	1	
8	19131-95502	CONNECTOR, THROTTLE ROD	1	
9	09140-05005	NUT	1	
10	09160-06047	WASHER (6.5X20X2)	1	
11	01550-06407	BOLT	1	

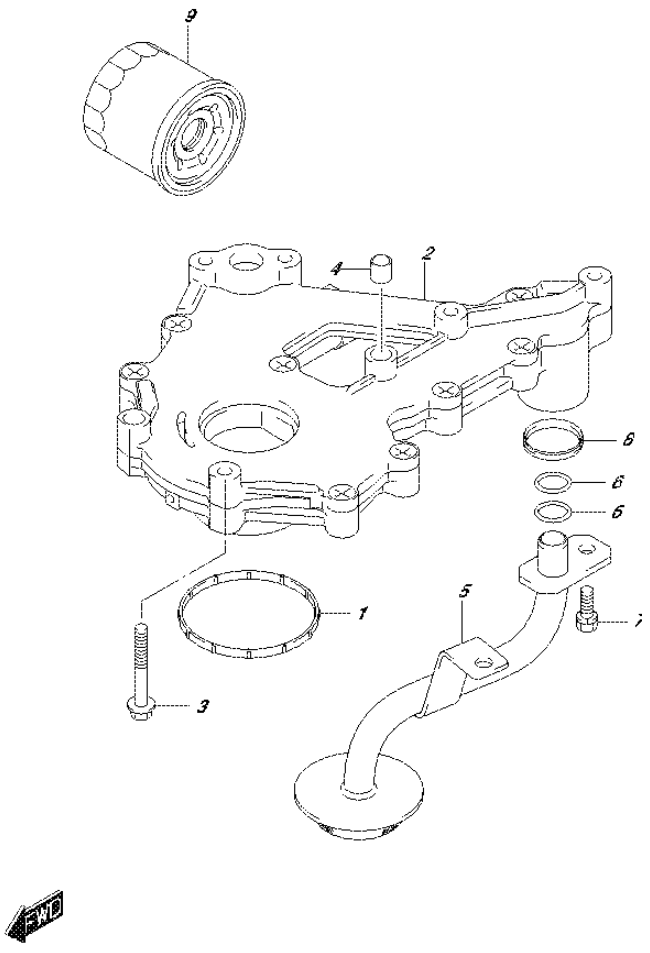

FIG.175A (1-K-9) OIL PUMP

REF NO.	PART NO.	DESCRIPTION	Q'TY	REMARKS
1	11433-88L00	GASKET, UNDER OIL SEAL	1	
2	16400-88L00	PUMP ASSY, OIL	1	
3	01547-0640A	BOLT	7	
4	04211-09109	PIN	2	
5	16520-88L00	STRAINER, OIL PUMP	1	
6	09280-12008	O RING (D:2.4,ID:12.3)	2	
7	01570-0616A	BOLT	2	
8	16519-87L00	SEAL, ENGINE HOLDER	1	
9	16510-87J00	FILTER ASSY, OIL	1	

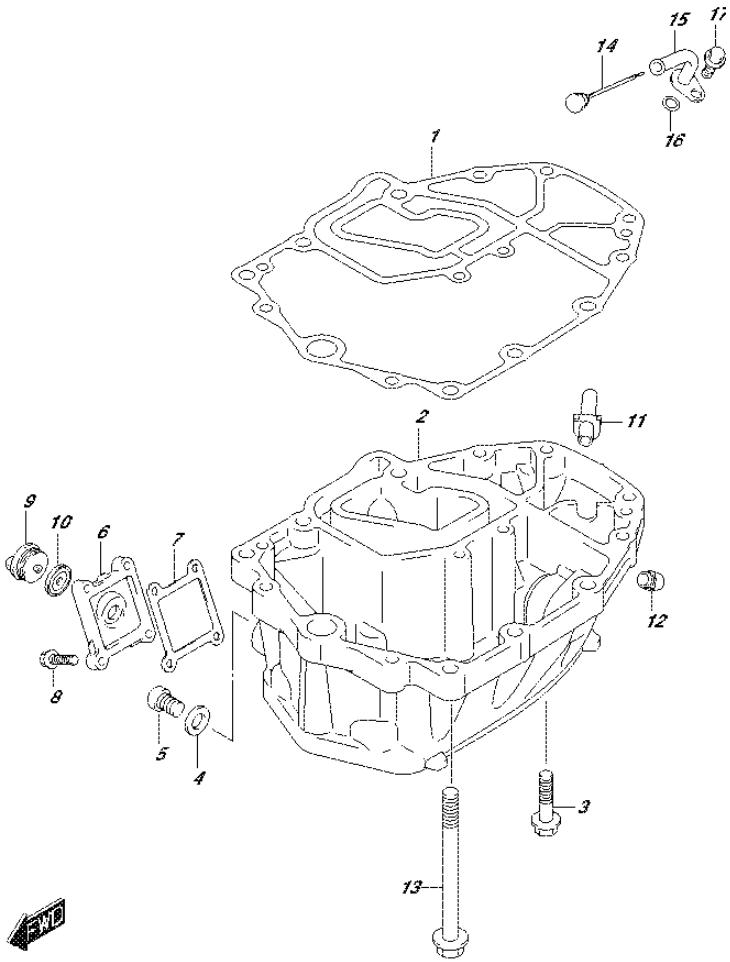

FIG.180A (1-K-10) OIL PAN (DF40A E01)

REF NO.	PART NO.	DESCRIPTION	Q'TY	REMARKS
1	11489-88L00	GASKET, OIL PAN	1	
2-1	11501-88L01-0EP	PAN, OIL (BLACK)	1	
2-2	11501-88L01-Y5S	PAN, OIL (WHITE)	1	
3	09116-08128	BOLT (8X40)	6	
4	09168-12012	GASKET (12.5X20X2.5)	1	
5	09248-12009	PLUG (12X18.65)	1	OIL DRAIN
6-1	11551-88L00-0EP	COVER, WATER JACKET OIL PAN (BLACK)	1	
6-2	11551-88L00-Y5S	COVER, WATER JACKET OIL PAN (WHITE)	1	
7	11552-88L00	GASKET, OIL PAN WTR JKT COV	1	
8	09116-06121	BOLT (6X25)	4	
9	17913-93J00	PLUG, WATER	1	
10	17914-93J00	GASKET, WATER PLUG	1	
11	11543-88L00	SILENCER, EXHAUST	1	
12	43112-99E00	PIPE, EXHAUST	1	
13	09116-10124	BOLT (10X150)	6	
14	16910-88L00	GAUGE, OIL LEVEL	1	
15	16930-88L00	GUIDE, OIL LEVEL GAUGE	1	
16	09280-09008	O RING (D:2.1,ID:8.8)	1	
17	01550-06127	BOLT	1	

FIG.180B

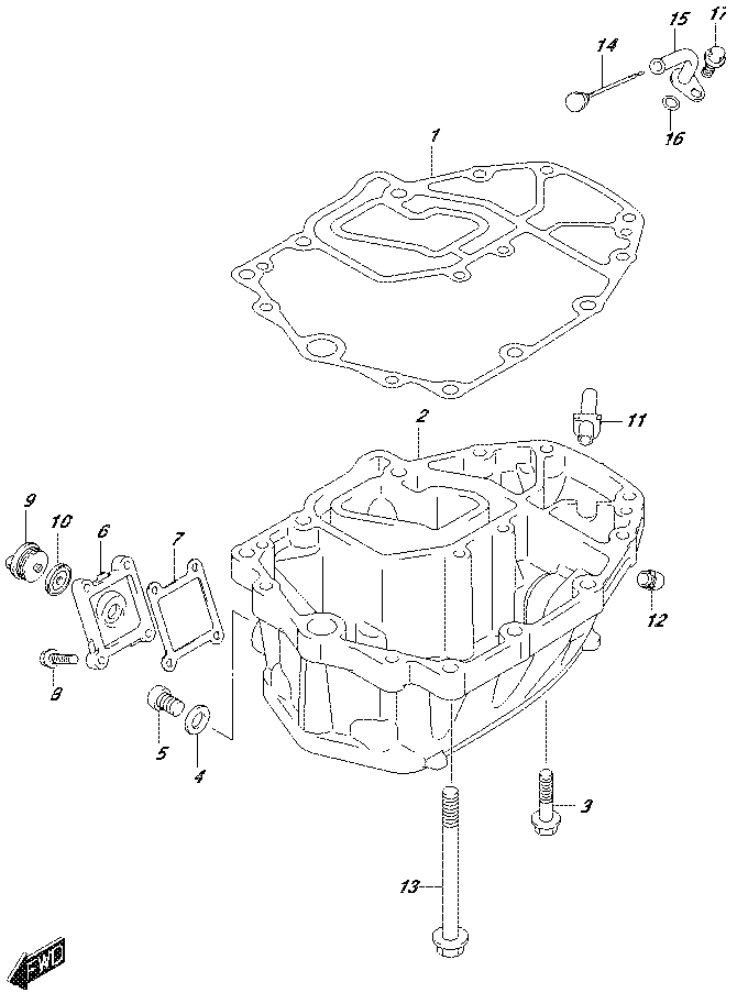

FIG.180B (1-K-11) OIL PAN (DF40AQH E01)

REF NO.	PART NO.	DESCRIPTION	Q'TY	REMARKS
1	11489-88L00	GASKET, OIL PAN	1	
2	11501-88L01-0EP	PAN, OIL (BLACK)	1	
3	09116-08128	BOLT (8X40)	6	
4	09168-12012	GASKET (12.5X20X2.5)	1	
5	09248-12009	PLUG (12X18.65)	1	OIL DRAIN
6	11551-88L00-0EP	COVER, WATER JACKET OIL PAN (BLACK)	1	
7	11552-88L00	GASKET, OIL PAN WTR JKT COV	1	
8	09116-06121	BOLT (6X25)	4	
9	17913-93J00	PLUG, WATER	1	
10	17914-93J00	GASKET, WATER PLUG	1	
11	11543-88L00	SILENCER, EXHAUST	1	
12	43112-99E00	PIPE, EXHAUST	1	
13	09116-10124	BOLT (10X150)	6	
14	16910-88L00	GAUGE, OIL LEVEL	1	
15	16930-88L00	GUIDE, OIL LEVEL GAUGE	1	
16	09280-09008	O RING (D:2.1,ID:8.8)	1	
17	01550-06127	BOLT	1	

FIG.180C

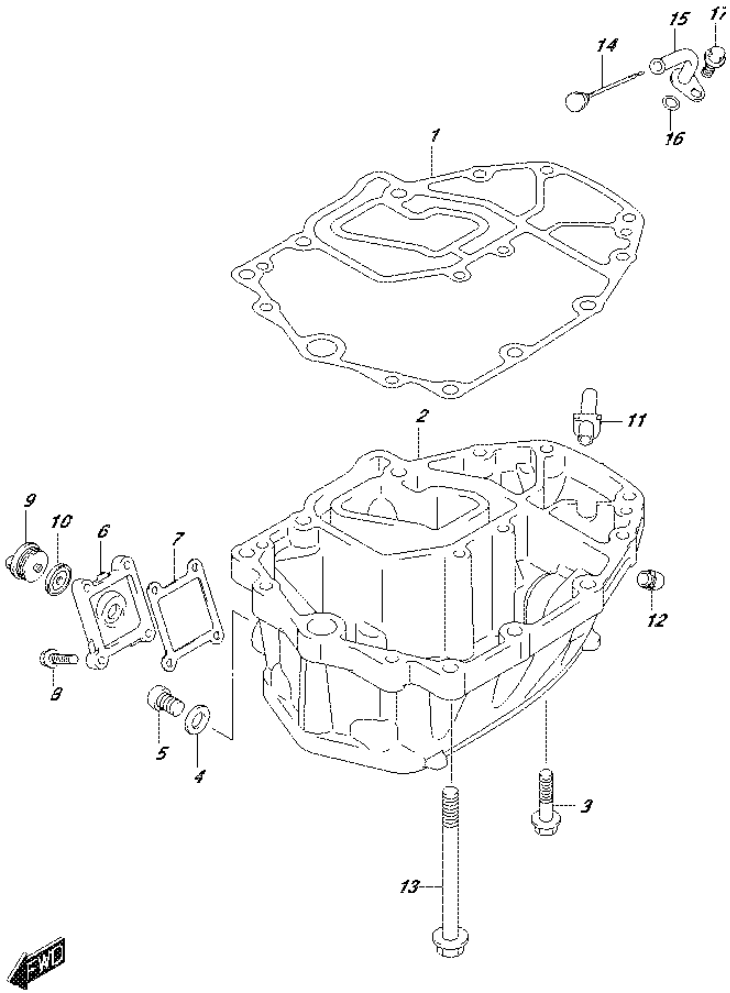

FIG.180C (1-K-12) OIL PAN (DF40ATH E01)

REF NO.	PART NO.	DESCRIPTION	Q'TY	REMARKS
1	11489-88L00	GASKET, OIL PAN	1	
2	11501-88L01-0EP	PAN, OIL (BLACK)	1	
3	09116-08128	BOLT (8X40)	6	
4	09168-12012	GASKET (12.5X20X2.5)	1	
5	09248-12009	PLUG (12X18.65)	1	OIL DRAIN
6	11551-88L00-0EP	COVER, WATER JACKET OIL PAN (BLACK)	1	
7	11552-88L00	GASKET, OIL PAN WTR JKT COV	1	
8	09116-06121	BOLT (6X25)	4	
9	17913-93J00	PLUG, WATER	1	
10	17914-93J00	GASKET, WATER PLUG	1	
11	11543-88L00	SILENCER, EXHAUST	1	
12	43112-99E00	PIPE, EXHAUST	1	
13	09116-10124	BOLT (10X150)	6	
14	16910-88L00	GAUGE, OIL LEVEL	1	
15	16930-88L00	GUIDE, OIL LEVEL GAUGE	1	
16	09280-09008	O RING (D:2.1,ID:8.8)	1	
17	01550-06127	BOLT	1	

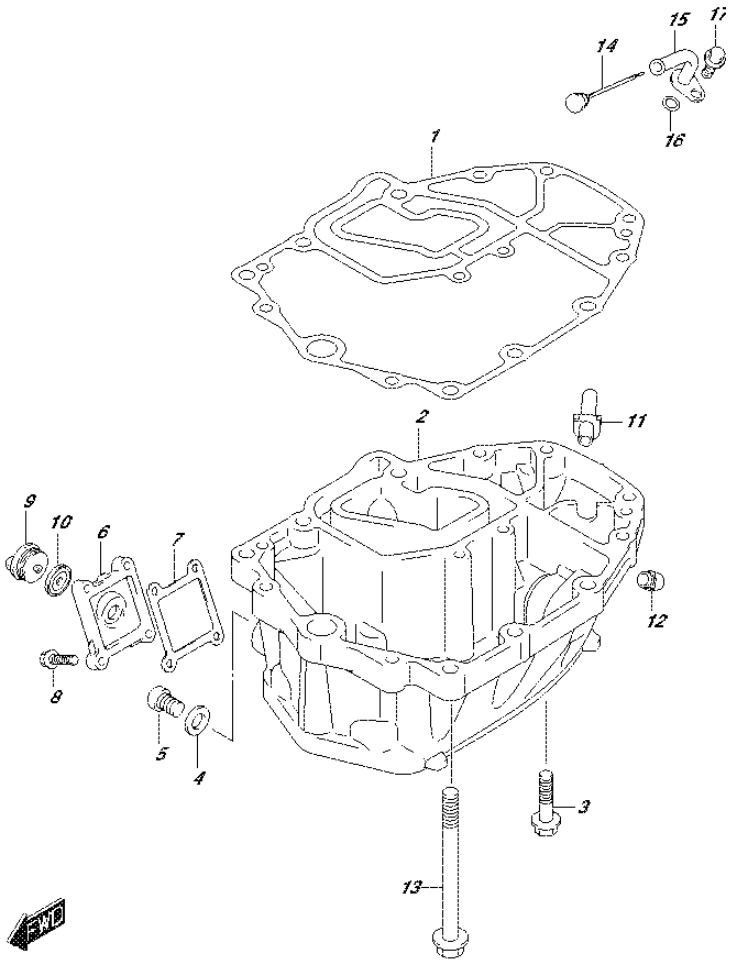

FIG.180D (1-K-13) OIL PAN (DF40AST E34)

REF NO.	PART NO.	DESCRIPTION	Q'TY	REMARKS
1	11489-88L00	GASKET, OIL PAN	1	
2-1	11501-88L01-0EP	PAN, OIL (BLACK)	1	
2-2	11501-88L01-Y5S	PAN, OIL (WHITE)	1	
3	09116-08128	BOLT (8X40)	6	
4	09168-12012	GASKET (12.5X20X2.5)	1	
5	09248-12009	PLUG (12X18.65)	1	OIL DRAIN
6-1	11551-88L00-0EP	COVER, WATER JACKET OIL PAN (BLACK)	1	
6-2	11551-88L00-Y5S	COVER, WATER JACKET OIL PAN (WHITE)	1	
7	11552-88L00	GASKET, OIL PAN WTR JKT COV	1	
8	09116-06121	BOLT (6X25)	4	
9	17913-93J00	PLUG, WATER	1	
10	17914-93J00	GASKET, WATER PLUG	1	
11	11543-88L00	SILENCER, EXHAUST	1	
12	43112-99E00	PIPE, EXHAUST	1	
13	09116-10124	BOLT (10X150)	6	
14	16910-88L00	GAUGE, OIL LEVEL	1	
15	16930-88L00	GUIDE, OIL LEVEL GAUGE	1	
16	09280-09008	O RING (D:2.1,ID:8.8)	1	
17	01550-06127	BOLT	1	

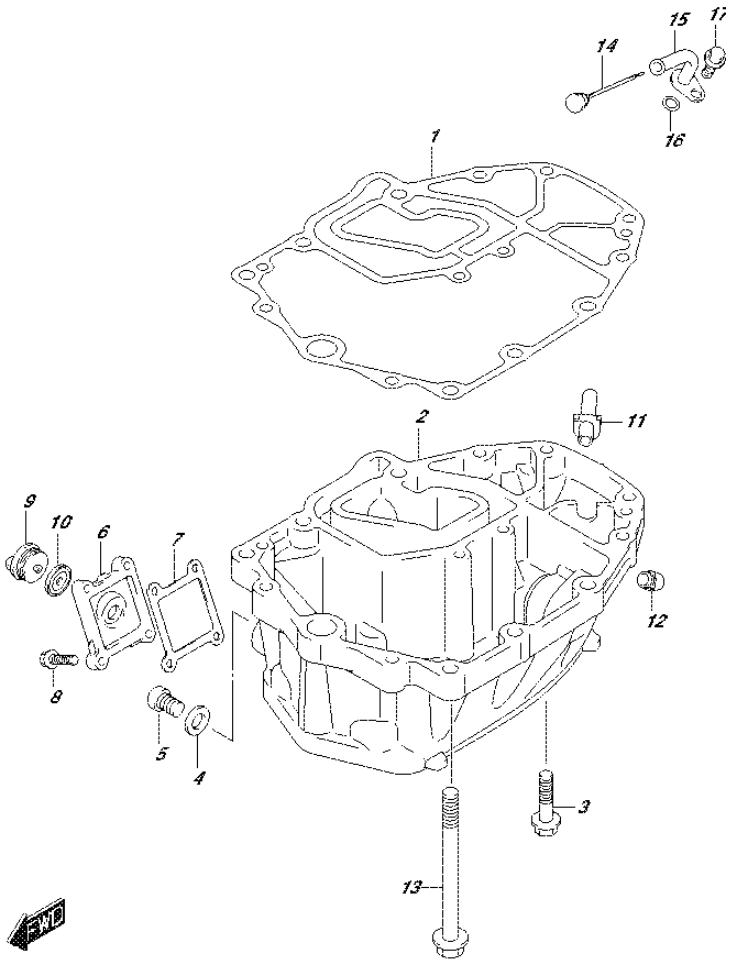

FIG.180E (1-K-14) OIL PAN (DF50A E01)

REF NO.	PART NO.	DESCRIPTION	Q'TY	REMARKS
1	11489-88L00	GASKET, OIL PAN	1	
2-1	11501-88L01-0EP	PAN, OIL (BLACK)	1	
2-2	11501-88L01-Y5S	PAN, OIL (WHITE)	1	
3	09116-08128	BOLT (8X40)	6	
4	09168-12012	GASKET (12.5X20X2.5)	1	
5	09248-12009	PLUG (12X18.65)	1	OIL DRAIN
6-1	11551-88L00-0EP	COVER, WATER JACKET OIL PAN (BLACK)	1	
6-2	11551-88L00-Y5S	COVER, WATER JACKET OIL PAN (WHITE)	1	
7	11552-88L00	GASKET, OIL PAN WTR JKT COV	1	
8	09116-06121	BOLT (6X25)	4	
9	17913-93J00	PLUG, WATER	1	
10	17914-93J00	GASKET, WATER PLUG	1	
11	11543-88L00	SILENCER, EXHAUST	1	
12	43112-99E00	PIPE, EXHAUST	1	
13	09116-10124	BOLT (10X150)	6	
14	16910-88L00	GAUGE, OIL LEVEL	1	
15	16930-88L00	GUIDE, OIL LEVEL GAUGE	1	
16	09280-09008	O RING (D:2.1,ID:8.8)	1	
17	01550-06127	BOLT	1	

FIG.180F

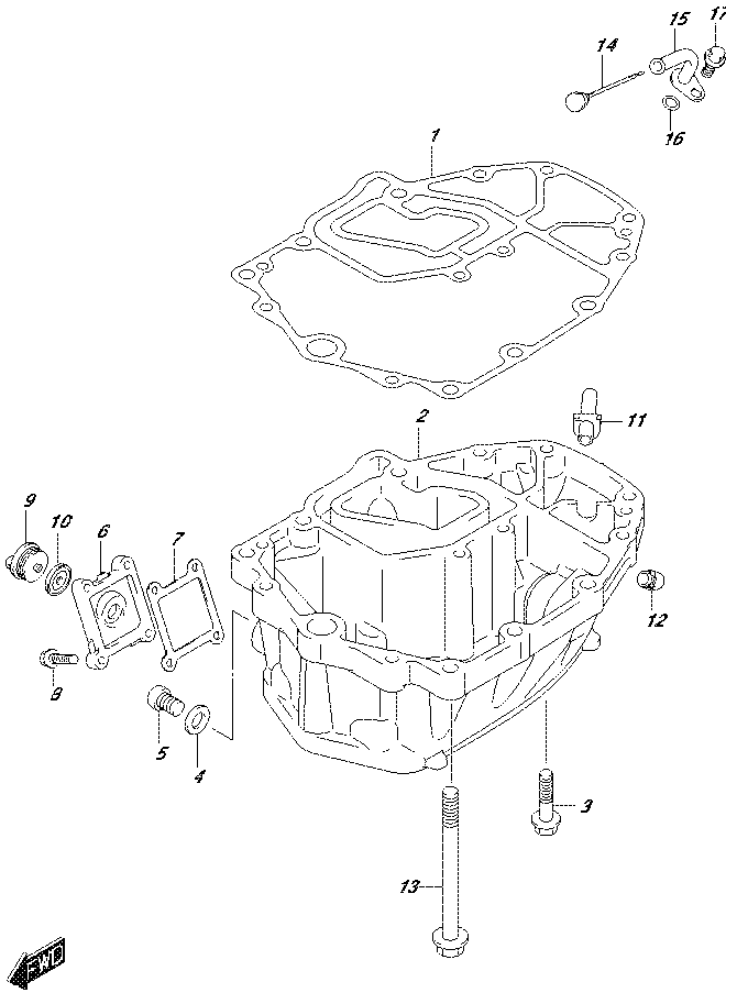

FIG.180F (1-K-15) OIL PAN (DF50ATH E01)

REF NO.	PART NO.	DESCRIPTION	Q'TY	REMARKS
1	11489-88L00	GASKET, OIL PAN	1	
2	11501-88L01-0EP	PAN, OIL (BLACK)	1	
3	09116-08128	BOLT (8X40)	6	
4	09168-12012	GASKET (12.5X20X2.5)	1	
5	09248-12009	PLUG (12X18.65)	1	OIL DRAIN
6	11551-88L00-0EP	COVER, WATER JACKET OIL PAN (BLACK)	1	
7	11552-88L00	GASKET, OIL PAN WTR JKT COV	1	
8	09116-06121	BOLT (6X25)	4	
9	17913-93J00	PLUG, WATER	1	
10	17914-93J00	GASKET, WATER PLUG	1	
11	11543-88L00	SILENCER, EXHAUST	1	
12	43112-99E00	PIPE, EXHAUST	1	
13	09116-10124	BOLT (10X150)	6	
14	16910-88L00	GAUGE, OIL LEVEL	1	
15	16930-88L00	GUIDE, OIL LEVEL GAUGE	1	
16	09280-09008	O RING (D:2.1,ID:8.8)	1	
17	01550-06127	BOLT	1	

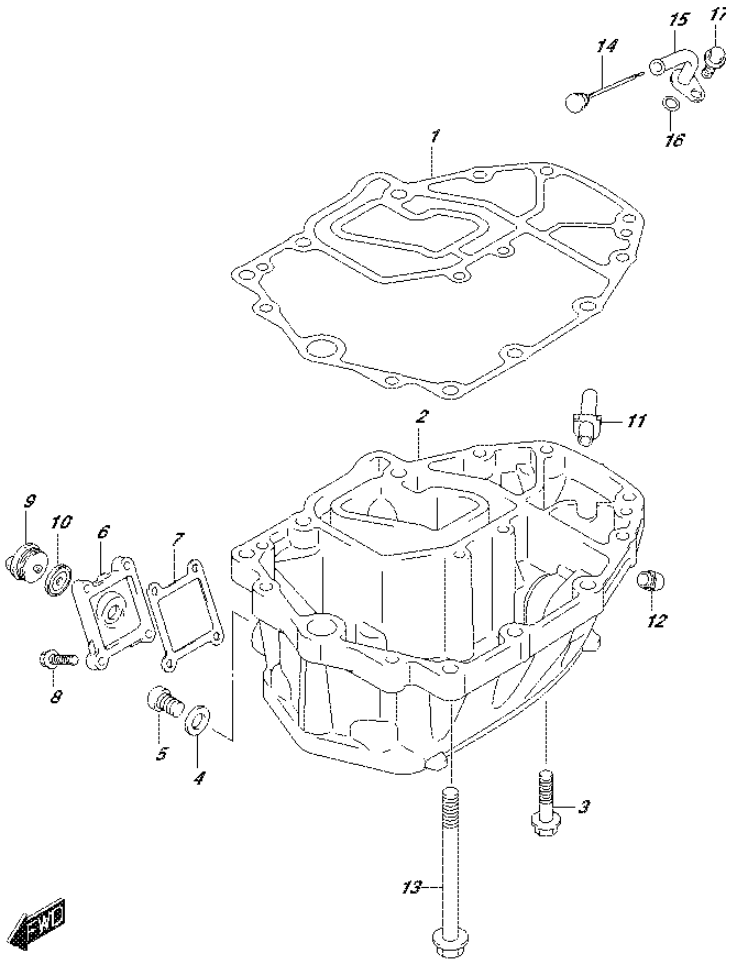

FIG.180G (1-L-2) OIL PAN (DF60A E01)

REF NO.	PART NO.	DESCRIPTION	Q'TY	REMARKS
1	11489-88L00	GASKET, OIL PAN	1	
2-1	11501-88L01-0EP	PAN, OIL (BLACK)	1	
2-2	11501-88L01-Y5S	PAN, OIL (WHITE)	1	
3	09116-08128	BOLT (8X40)	6	
4	09168-12012	GASKET (12.5X20X2.5)	1	
5	09248-12009	PLUG (12X18.65)	1	OIL DRAIN
6-1	11551-88L00-0EP	COVER, WATER JACKET OIL PAN (BLACK)	1	
6-2	11551-88L00-Y5S	COVER, WATER JACKET OIL PAN (WHITE)	1	
7	11552-88L00	GASKET, OIL PAN WTR JKT COV	1	
8	09116-06121	BOLT (6X25)	4	
9	17913-93J00	PLUG, WATER	1	
10	17914-93J00	GASKET, WATER PLUG	1	
11	11543-88L00	SILENCER, EXHAUST	1	
12	43112-99E00	PIPE, EXHAUST	1	
13	09116-10124	BOLT (10X150)	6	
14	16910-88L00	GAUGE, OIL LEVEL	1	
15	16930-88L00	GUIDE, OIL LEVEL GAUGE	1	
16	09280-09008	O RING (D:2.1,ID:8.8)	1	
17	01550-06127	BOLT	1	

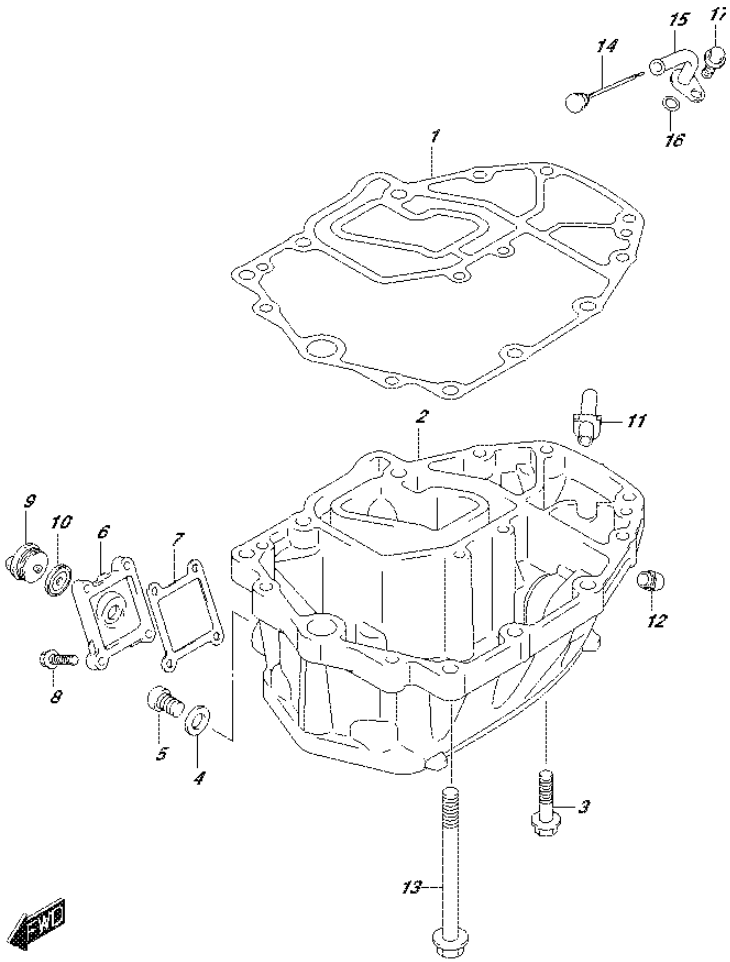

FIG.180H (1-L-3) OIL PAN (DF60A E40)

REF NO.	PART NO.	DESCRIPTION	Q'TY	REMARKS
1	11489-88L00	GASKET, OIL PAN	1	
2-1	11501-88L01-0EP	PAN, OIL (BLACK)	1	
2-2	11501-88L01-Y5S	PAN, OIL (WHITE)	1	
3	09116-08128	BOLT (8X40)	6	
4	09168-12012	GASKET (12.5X20X2.5)	1	
5	09248-12009	PLUG (12X18.65)	1	OIL DRAIN
6-1	11551-88L00-0EP	COVER, WATER JACKET OIL PAN (BLACK)	1	
6-2	11551-88L00-Y5S	COVER, WATER JACKET OIL PAN (WHITE)	1	
7	11552-88L00	GASKET, OIL PAN WTR JKT COV	1	
8	09116-06121	BOLT (6X25)	4	
9	17913-93J00	PLUG, WATER	1	
10	17914-93J00	GASKET, WATER PLUG	1	
11	11543-88L00	SILENCER, EXHAUST	1	
12	43112-99E00	PIPE, EXHAUST	1	
13	09116-10124	BOLT (10X150)	6	
14	16910-88L00	GAUGE, OIL LEVEL	1	
15	16930-88L00	GUIDE, OIL LEVEL GAUGE	1	
16	09280-09008	O RING (D:2.1,ID:8.8)	1	
17	01550-06127	BOLT	1	

FIG.180J

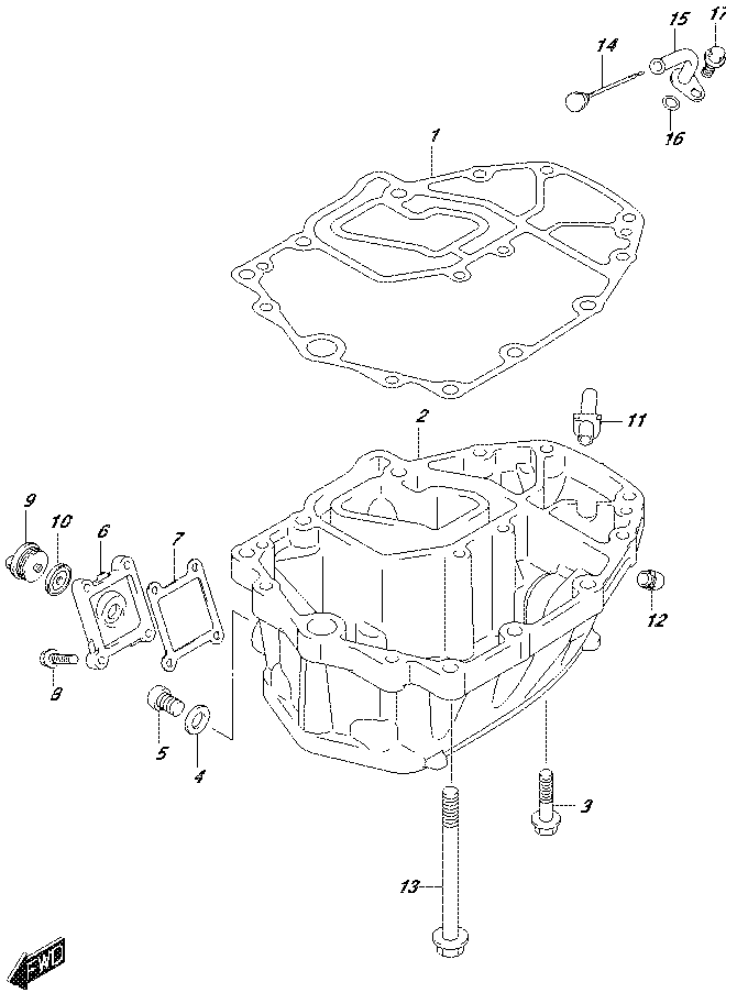

FIG.180J (1-L-4) OIL PAN (DF60A E40)

REF NO.	PART NO.	DESCRIPTION	Q'TY	REMARKS
1	11489-88L00	GASKET, OIL PAN	1	
2	11501-88L01-0EP	PAN, OIL (BLACK)	1	
3	09116-08128	BOLT (8X40)	6	
4	09168-12012	GASKET (12.5X20X2.5)	1	
5	09248-12009	PLUG (12X18.65)	1	OIL DRAIN
6	11551-88L00-0EP	COVER, WATER JACKET OIL PAN (BLACK)	1	
7	11552-88L00	GASKET, OIL PAN WTR JKT COV	1	
8	09116-06121	BOLT (6X25)	4	
9	17913-93J00	PLUG, WATER	1	
10	17914-93J00	GASKET, WATER PLUG	1	
11	11543-88L00	SILENCER, EXHAUST	1	
12	43112-99E00	PIPE, EXHAUST	1	
13	09116-10124	BOLT (10X150)	6	
14	16910-88L00	GAUGE, OIL LEVEL	1	
15	16930-88L00	GUIDE, OIL LEVEL GAUGE	1	
16	09280-09008	O RING (D:2.1,ID:8.8)	1	
17	01550-06127	BOLT	1	

FIG.180K

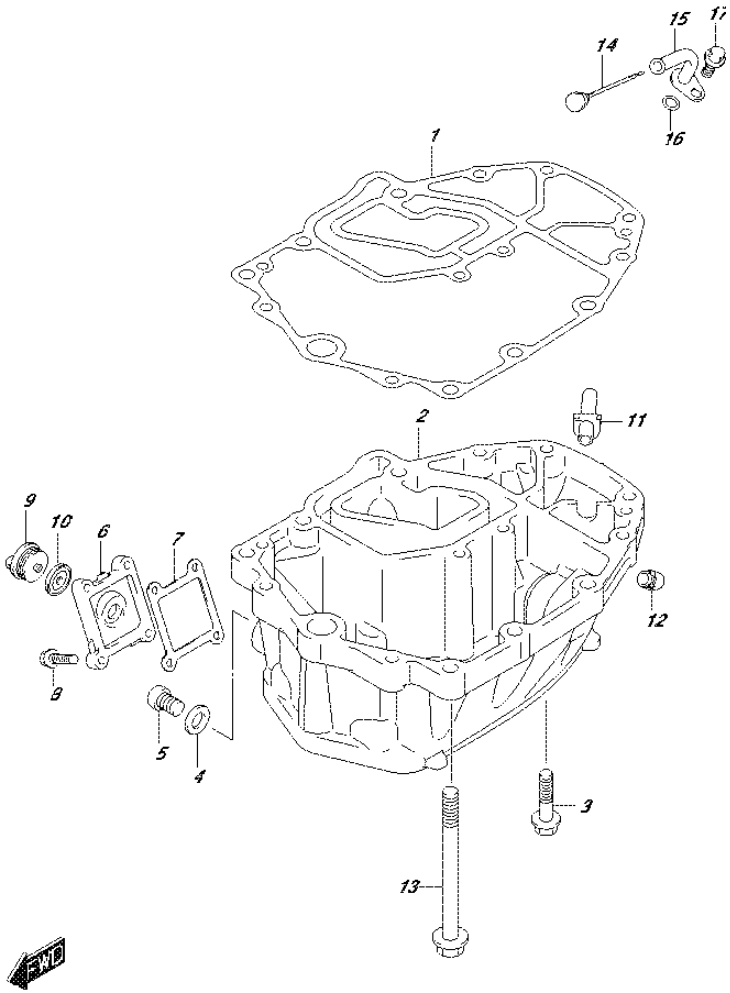

FIG.180K (1-L-5) OIL PAN (DF60AQH E01)

REF NO.	PART NO.	DESCRIPTION	Q'TY	REMARKS
1	11489-88L00	GASKET, OIL PAN	1	
2	11501-88L01-0EP	PAN, OIL (BLACK)	1	
3	09116-08128	BOLT (8X40)	6	
4	09168-12012	GASKET (12.5X20X2.5)	1	
5	09248-12009	PLUG (12X18.65)	1	OIL DRAIN
6	11551-88L00-0EP	COVER, WATER JACKET OIL PAN (BLACK)	1	
7	11552-88L00	GASKET, OIL PAN WTR JKT COV	1	
8	09116-06121	BOLT (6X25)	4	
9	17913-93J00	PLUG, WATER	1	
10	17914-93J00	GASKET, WATER PLUG	1	
11	11543-88L00	SILENCER, EXHAUST	1	
12	43112-99E00	PIPE, EXHAUST	1	
13	09116-10124	BOLT (10X150)	6	
14	16910-88L00	GAUGE, OIL LEVEL	1	
15	16930-88L00	GUIDE, OIL LEVEL GAUGE	1	
16	09280-09008	O RING (D:2.1,ID:8.8)	1	
17	01550-06127	BOLT	1	

FIG.180L

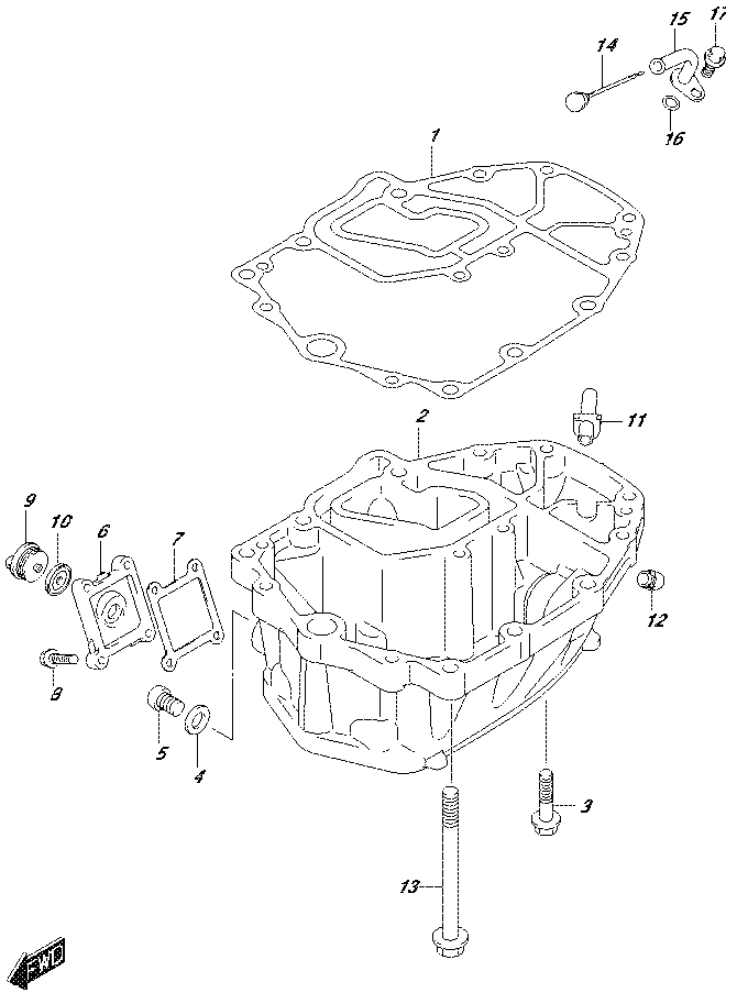

FIG.180L (1-L-6) OIL PAN (DF60AQH E40)

REF NO.	PART NO.	DESCRIPTION	Q'TY	REMARKS
1	11489-88L00	GASKET, OIL PAN	1	
2	11501-88L01-0EP	PAN, OIL (BLACK)	1	
3	09116-08128	BOLT (8X40)	6	
4	09168-12012	GASKET (12.5X20X2.5)	1	
5	09248-12009	PLUG (12X18.65)	1	OIL DRAIN
6	11551-88L00-0EP	COVER, WATER JACKET OIL PAN (BLACK)	1	
7	11552-88L00	GASKET, OIL PAN WTR JKT COV	1	
8	09116-06121	BOLT (6X25)	4	
9	17913-93J00	PLUG, WATER	1	
10	17914-93J00	GASKET, WATER PLUG	1	
11	11543-88L00	SILENCER, EXHAUST	1	
12	43112-99E00	PIPE, EXHAUST	1	
13	09116-10124	BOLT (10X150)	6	
14	16910-88L00	GAUGE, OIL LEVEL	1	
15	16930-88L00	GUIDE, OIL LEVEL GAUGE	1	
16	09280-09008	O RING (D:2.1,ID:8.8)	1	
17	01550-06127	BOLT	1	

FIG.180M

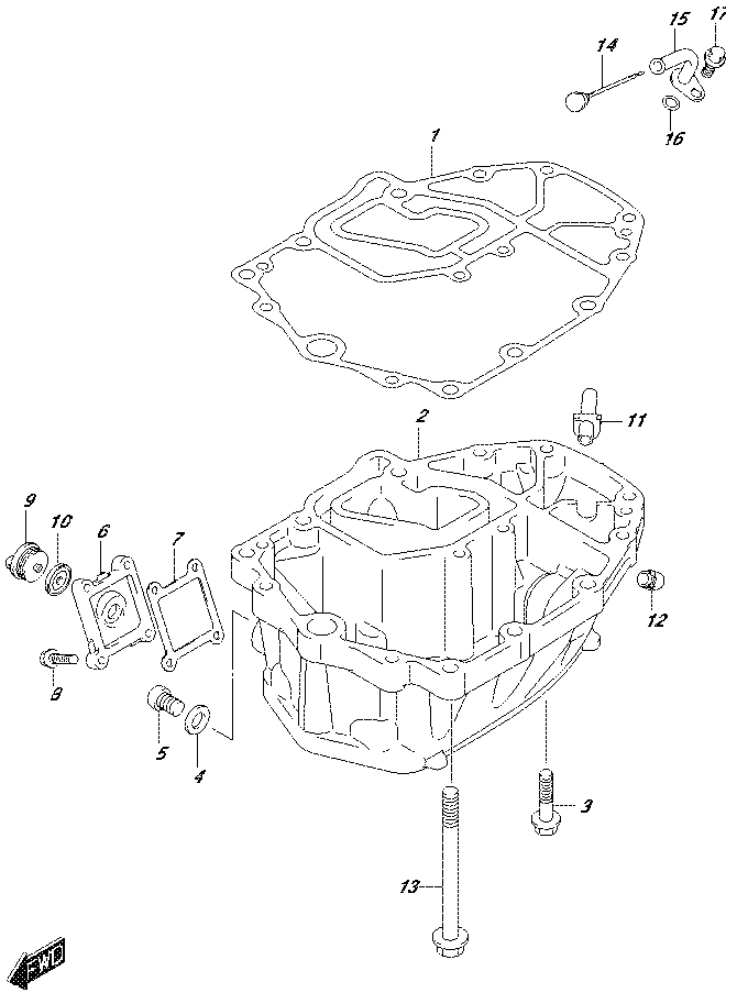

FIG.180M (1-L-7) OIL PAN (DF60ATH E01)

REF NO.	PART NO.	DESCRIPTION	Q'TY	REMARKS
1	11489-88L00	GASKET, OIL PAN	1	
2	11501-88L01-0EP	PAN, OIL (BLACK)	1	
3	09116-08128	BOLT (8X40)	6	
4	09168-12012	GASKET (12.5X20X2.5)	1	
5	09248-12009	PLUG (12X18.65)	1	OIL DRAIN
6	11551-88L00-0EP	COVER, WATER JACKET OIL PAN (BLACK)	1	
7	11552-88L00	GASKET, OIL PAN WTR JKT COV	1	
8	09116-06121	BOLT (6X25)	4	
9	17913-93J00	PLUG, WATER	1	
10	17914-93J00	GASKET, WATER PLUG	1	
11	11543-88L00	SILENCER, EXHAUST	1	
12	43112-99E00	PIPE, EXHAUST	1	
13	09116-10124	BOLT (10X150)	6	
14	16910-88L00	GAUGE, OIL LEVEL	1	
15	16930-88L00	GUIDE, OIL LEVEL GAUGE	1	
16	09280-09008	O RING (D:2.1,ID:8.8)	1	
17	01550-06127	BOLT	1	

FIG.180N

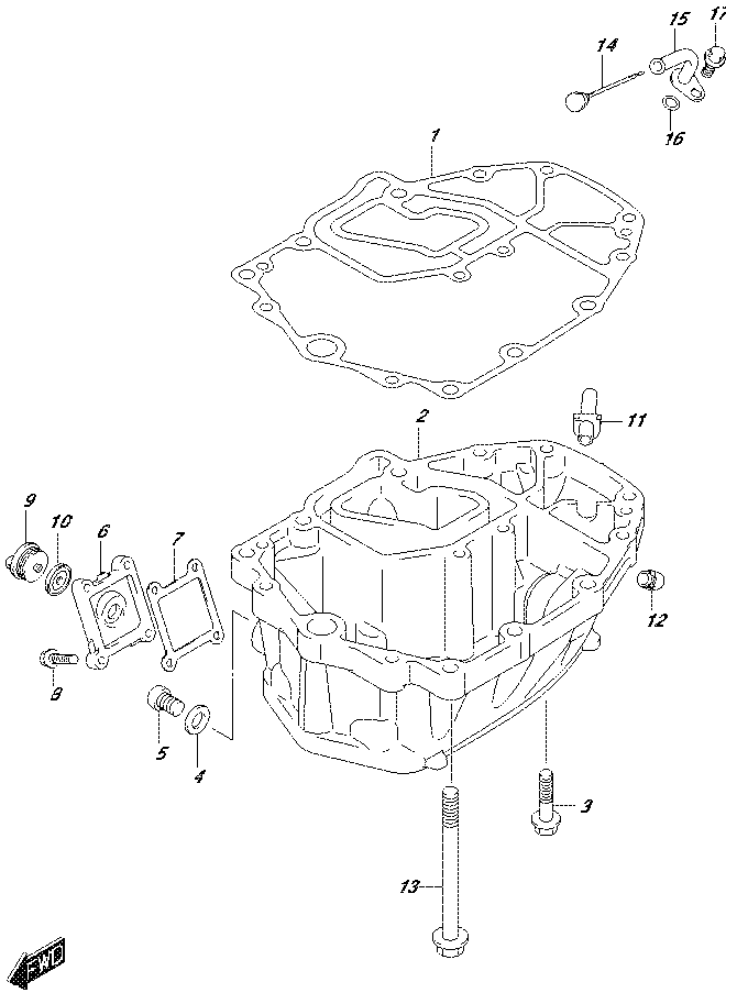

FIG.180N (1-L-8) OIL PAN (DF60ATH E40)

REF NO.	PART NO.	DESCRIPTION	Q'TY	REMARKS
1	11489-88L00	GASKET, OIL PAN	1	
2	11501-88L01-0EP	PAN, OIL (BLACK)	1	
3	09116-08128	BOLT (8X40)	6	
4	09168-12012	GASKET (12.5X20X2.5)	1	
5	09248-12009	PLUG (12X18.65)	1	OIL DRAIN
6	11551-88L00-0EP	COVER, WATER JACKET OIL PAN (BLACK)	1	
7	11552-88L00	GASKET, OIL PAN WTR JKT COV	1	
8	09116-06121	BOLT (6X25)	4	
9	17913-93J00	PLUG, WATER	1	
10	17914-93J00	GASKET, WATER PLUG	1	
11	11543-88L00	SILENCER, EXHAUST	1	
12	43112-99E00	PIPE, EXHAUST	1	
13	09116-10124	BOLT (10X150)	6	
14	16910-88L00	GAUGE, OIL LEVEL	1	
15	16930-88L00	GUIDE, OIL LEVEL GAUGE	1	
16	09280-09008	O RING (D:2.1,ID:8.8)	1	
17	01550-06127	BOLT	1	

FIG.180P

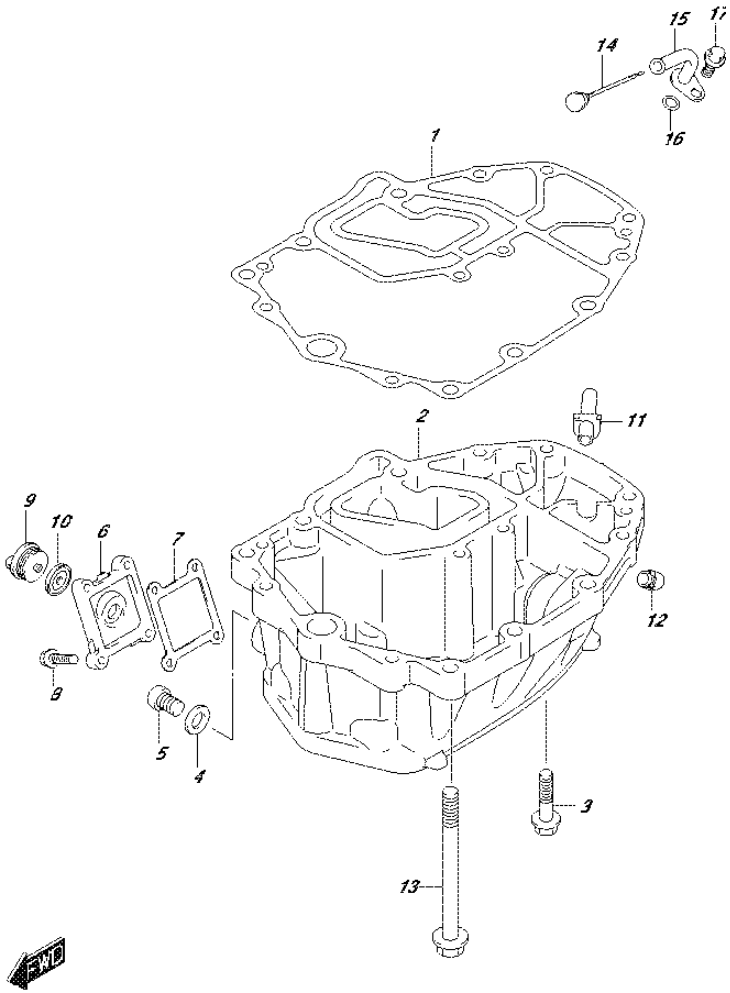

FIG.180P (1-L-9) OIL PAN (DF50AVT E01)

REF NO.	PART NO.	DESCRIPTION	Q'TY	REMARKS
1	11489-88L00	GASKET, OIL PAN	1	
2	11501-88L01-0EP	PAN, OIL (BLACK)	1	
3	09116-08128	BOLT (8X40)	6	
4	09168-12012	GASKET (12.5X20X2.5)	1	
5	09248-12009	PLUG (12X18.65)	1	OIL DRAIN
6	11551-88L00-0EP	COVER, WATER JACKET OIL PAN (BLACK)	1	
7	11552-88L00	GASKET, OIL PAN WTR JKT COV	1	
8	09116-06121	BOLT (6X25)	4	
9	17913-93J00	PLUG, WATER	1	
10	17914-93J00	GASKET, WATER PLUG	1	
11	11543-88L00	SILENCER, EXHAUST	1	
12	43112-99E00	PIPE, EXHAUST	1	
13	09116-10124	BOLT (10X150)	6	
14	16910-88L00	GAUGE, OIL LEVEL	1	
15	16930-88L00	GUIDE, OIL LEVEL GAUGE	1	
16	09280-09008	O RING (D:2.1,ID:8.8)	1	
17	01550-06127	BOLT	1	

FIG.180R

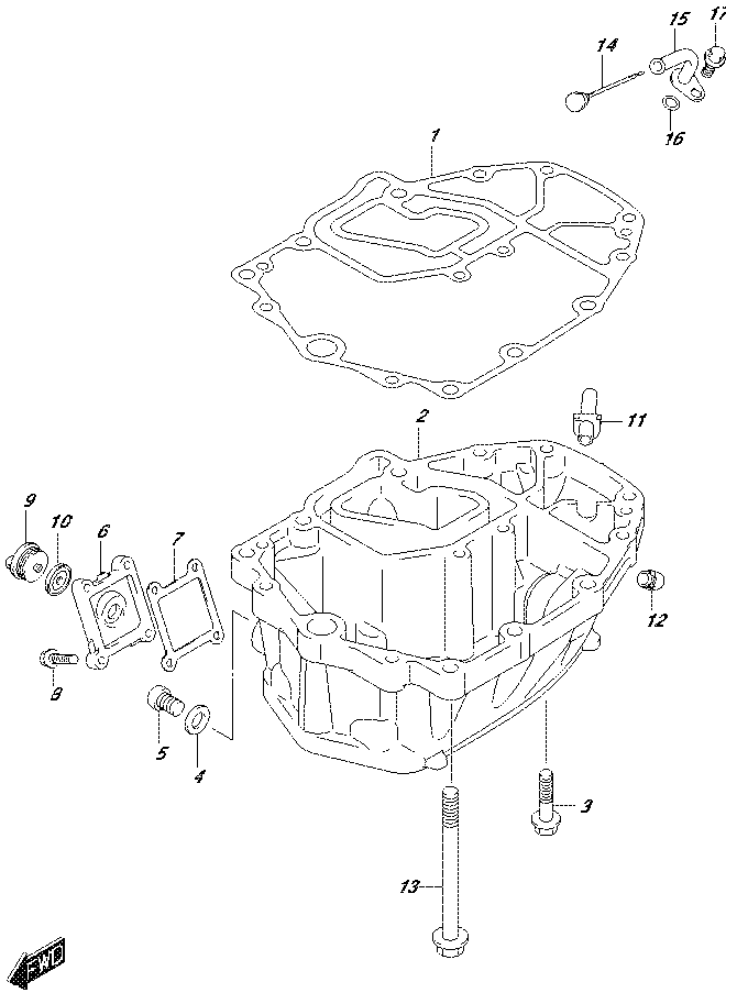

FIG.180R (1-L-10) OIL PAN (DF50AVTH E01)

REF NO.	PART NO.	DESCRIPTION	Q'TY	REMARKS
1	11489-88L00	GASKET, OIL PAN	1	
2	11501-88L01-0EP	PAN, OIL (BLACK)	1	
3	09116-08128	BOLT (8X40)	6	
4	09168-12012	GASKET (12.5X20X2.5)	1	
5	09248-12009	PLUG (12X18.65)	1	OIL DRAIN
6	11551-88L00-0EP	COVER, WATER JACKET OIL PAN (BLACK)	1	
7	11552-88L00	GASKET, OIL PAN WTR JKT COV	1	
8	09116-06121	BOLT (6X25)	4	
9	17913-93J00	PLUG, WATER	1	
10	17914-93J00	GASKET, WATER PLUG	1	
11	11543-88L00	SILENCER, EXHAUST	1	
12	43112-99E00	PIPE, EXHAUST	1	
13	09116-10124	BOLT (10X150)	6	
14	16910-88L00	GAUGE, OIL LEVEL	1	
15	16930-88L00	GUIDE, OIL LEVEL GAUGE	1	
16	09280-09008	O RING (D:2.1,ID:8.8)	1	
17	01550-06127	BOLT	1	

FIG.180S

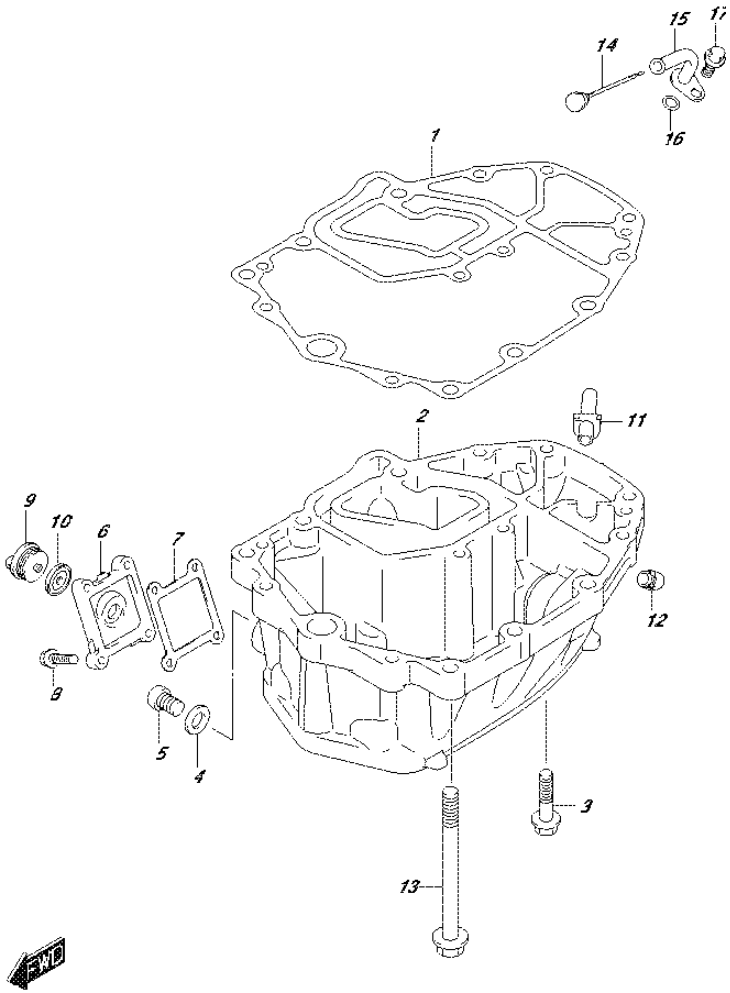

FIG.180S (1-L-11) OIL PAN (DF60AVT E01)

REF NO.	PART NO.	DESCRIPTION	Q'TY	REMARKS
1	11489-88L00	GASKET, OIL PAN	1	
2	11501-88L01-0EP	PAN, OIL (BLACK)	1	
3	09116-08128	BOLT (8X40)	6	
4	09168-12012	GASKET (12.5X20X2.5)	1	
5	09248-12009	PLUG (12X18.65)	1	OIL DRAIN
6	11551-88L00-0EP	COVER, WATER JACKET OIL PAN (BLACK)	1	
7	11552-88L00	GASKET, OIL PAN WTR JKT COV	1	
8	09116-06121	BOLT (6X25)	4	
9	17913-93J00	PLUG, WATER	1	
10	17914-93J00	GASKET, WATER PLUG	1	
11	11543-88L00	SILENCER, EXHAUST	1	
12	43112-99E00	PIPE, EXHAUST	1	
13	09116-10124	BOLT (10X150)	6	
14	16910-88L00	GAUGE, OIL LEVEL	1	
15	16930-88L00	GUIDE, OIL LEVEL GAUGE	1	
16	09280-09008	O RING (D:2.1,ID:8.8)	1	
17	01550-06127	BOLT	1	

FIG.180T

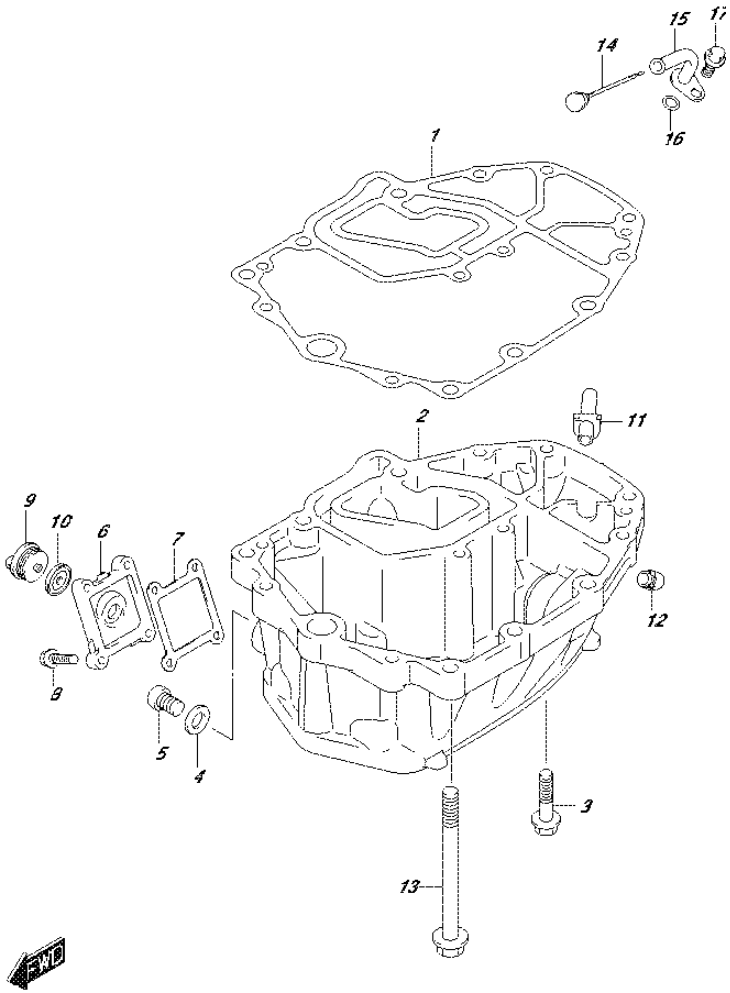

FIG.180T (1-L-12) OIL PAN (DF60AVT E40)

REF NO.	PART NO.	DESCRIPTION	Q'TY	REMARKS
1	11489-88L00	GASKET, OIL PAN	1	
2	11501-88L01-0EP	PAN, OIL (BLACK)	1	
3	09116-08128	BOLT (8X40)	6	
4	09168-12012	GASKET (12.5X20X2.5)	1	
5	09248-12009	PLUG (12X18.65)	1	OIL DRAIN
6	11551-88L00-0EP	COVER, WATER JACKET OIL PAN (BLACK)	1	
7	11552-88L00	GASKET, OIL PAN WTR JKT COV	1	
8	09116-06121	BOLT (6X25)	4	
9	17913-93J00	PLUG, WATER	1	
10	17914-93J00	GASKET, WATER PLUG	1	
11	11543-88L00	SILENCER, EXHAUST	1	
12	43112-99E00	PIPE, EXHAUST	1	
13	09116-10124	BOLT (10X150)	6	
14	16910-88L00	GAUGE, OIL LEVEL	1	
15	16930-88L00	GUIDE, OIL LEVEL GAUGE	1	
16	09280-09008	O RING (D:2.1,ID:8.8)	1	
17	01550-06127	BOLT	1	

FIG.180U

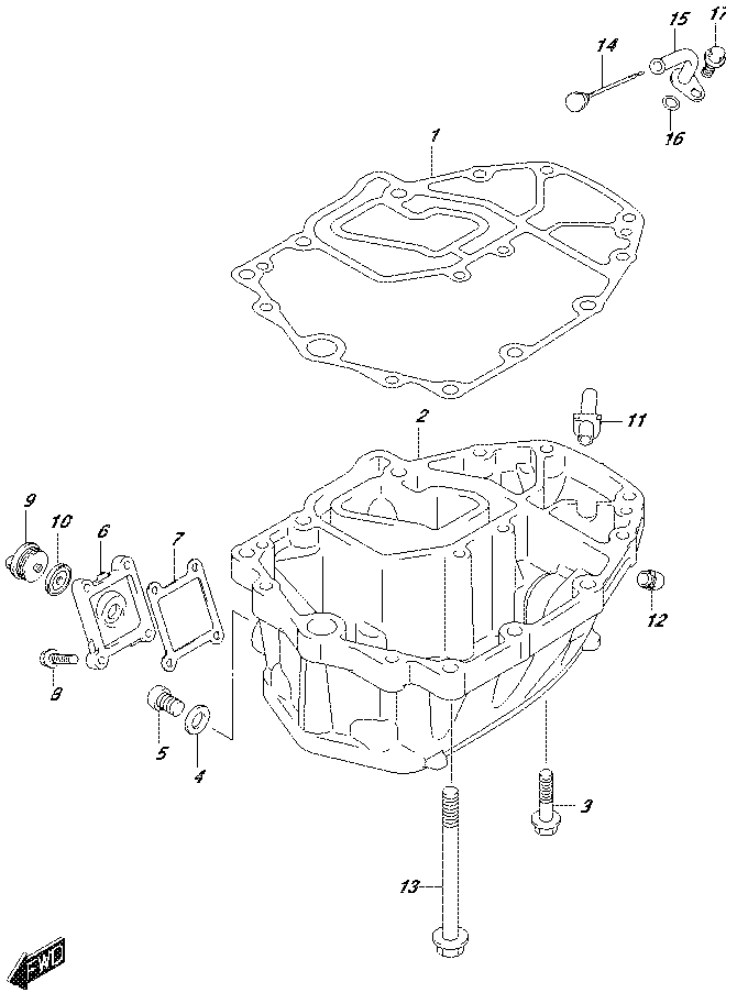

FIG.180U (1-L-13) OIL PAN (DF60AVTH E01)

REF NO.	PART NO.	DESCRIPTION	Q'TY	REMARKS
1	11489-88L00	GASKET, OIL PAN	1	
2	11501-88L01-0EP	PAN, OIL (BLACK)	1	
3	09116-08128	BOLT (8X40)	6	
4	09168-12012	GASKET (12.5X20X2.5)	1	
5	09248-12009	PLUG (12X18.65)	1	OIL DRAIN
6	11551-88L00-0EP	COVER, WATER JACKET OIL PAN (BLACK)	1	
7	11552-88L00	GASKET, OIL PAN WTR JKT COV	1	
8	09116-06121	BOLT (6X25)	4	
9	17913-93J00	PLUG, WATER	1	
10	17914-93J00	GASKET, WATER PLUG	1	
11	11543-88L00	SILENCER, EXHAUST	1	
12	43112-99E00	PIPE, EXHAUST	1	
13	09116-10124	BOLT (10X150)	6	
14	16910-88L00	GAUGE, OIL LEVEL	1	
15	16930-88L00	GUIDE, OIL LEVEL GAUGE	1	
16	09280-09008	O RING (D:2.1,ID:8.8)	1	
17	01550-06127	BOLT	1	

FIG.204A

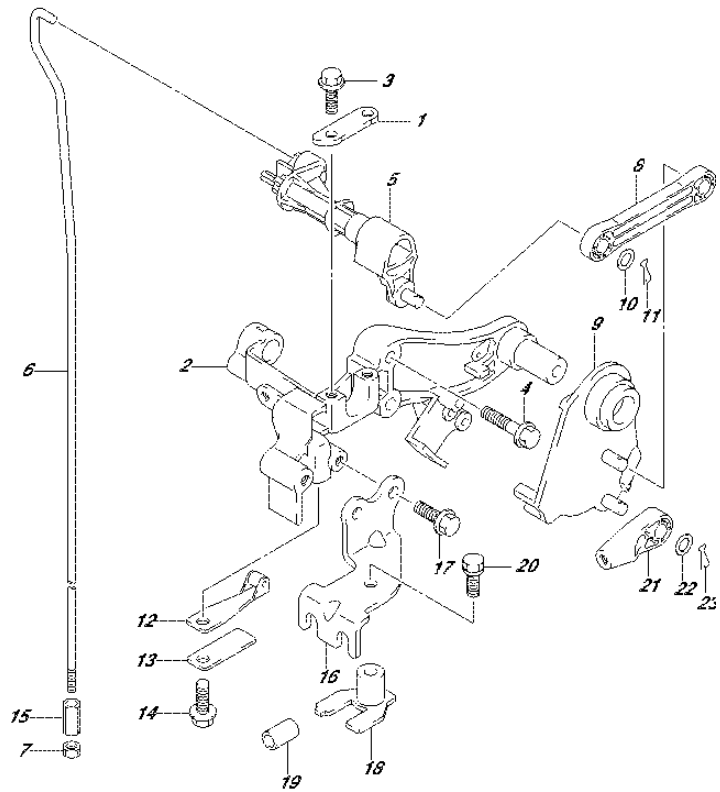

FIG.204A (1-L-14) CLUTCH SHAFT (DF40A E01)

REF NO.	PART NO.	DESCRIPTION	Q'TY	REMARKS
1	21126-88L00	HOLDER, CLUTCH SHAFT	1	
2	21151-88L00	HOLDER, CLUTCH LEVER	1	
3	01550-06167	BOLT	2	
4	01550-06307	BOLT	2	
5	21210-88L00	SHAFT, CLUTCH	1	
6-1	23111-88L00	ROD, CLUTCH (S)	1	W/TRANSOM(S)
6-2	23111-88L10	ROD, CLUTCH (L)	1	W/TRANSOM(L)
7	29141-93J00	NUT, CLUTCH ROD	1	
8	23115-88L00	LINK, CLUTCH LEVER	1	
9	23210-88L00	LEVER, CLUTCH CONTROL	1	
10	09160-06055	WASHER (7X12X1)	2	
11	09385-06012	CLIP	2	
12	23213-89J01	SPRING, NOTCH PLATE NO.1	1	
13	23214-89J00	SPRING, NOTCH PLATE NO.2	1	
14	01550-06127	BOLT	1	
15	23311-95J00	TURNBUCKLE, CLUTCH ROD	1	
16	67341-88L01	HOLDER, REMOCON CABLE	1	
17	01550-06167	BOLT	2	
18	67343-88L01	STOPPER, REMOCON CABLE	1	
19	09352-70103-600	HOSE (7X10.2X600)	2	L:600->14
20	01570-06167	BOLT	1	
21	67467-89J01	CONNECTOR, REMOCON CABLE	2	
22	09160-06055	WASHER (7X12X1)	2	
23	09385-06012	CLIP	2	

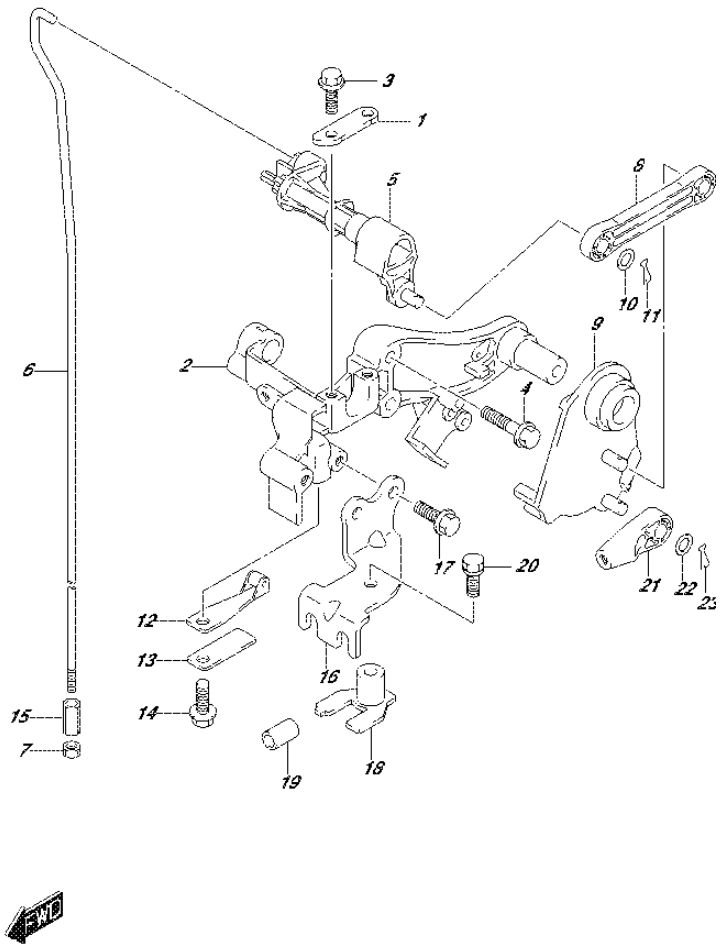

FIG.204B (1-L-15) CLUTCH SHAFT (DF40AQH E01)

REF NO.	PART NO.	DESCRIPTION	Q'TY	REMARKS
1	21126-88L00	HOLDER, CLUTCH SHAFT	1	
2	21151-88L00	HOLDER, CLUTCH LEVER	1	
3	01550-06167	BOLT	2	
4	01550-06307	BOLT	2	
5	21210-88L00	SHAFT, CLUTCH	1	
6	23111-88L10	ROD, CLUTCH (L)	1	
7	29141-93J00	NUT, CLUTCH ROD	1	
8	23115-88L00	LINK, CLUTCH LEVER	1	
9	23210-88L00	LEVER, CLUTCH CONTROL	1	
10	09160-06055	WASHER (7X12X1)	2	
11	09385-06012	CLIP	2	
12	23213-89J01	SPRING, NOTCH PLATE NO.1	1	
13	23214-89J00	SPRING, NOTCH PLATE NO.2	1	
14	01550-06127	BOLT	1	
15	23311-95J00	TURNBUCKLE, CLUTCH ROD	1	
16	67341-88L01	HOLDER, REMOCON CABLE	1	
17	01550-06167	BOLT	2	
18	67343-88L01	STOPPER, REMOCON CABLE	1	
19	09352-70103-600	HOSE (7X10.2X600)	2	L:600->14
20	01570-06167	BOLT	1	
21	67467-89J01	CONNECTOR, REMOCON CABLE	2	
22	09160-06055	WASHER (7X12X1)	2	
23	09385-06012	CLIP	2	

FIG.204C

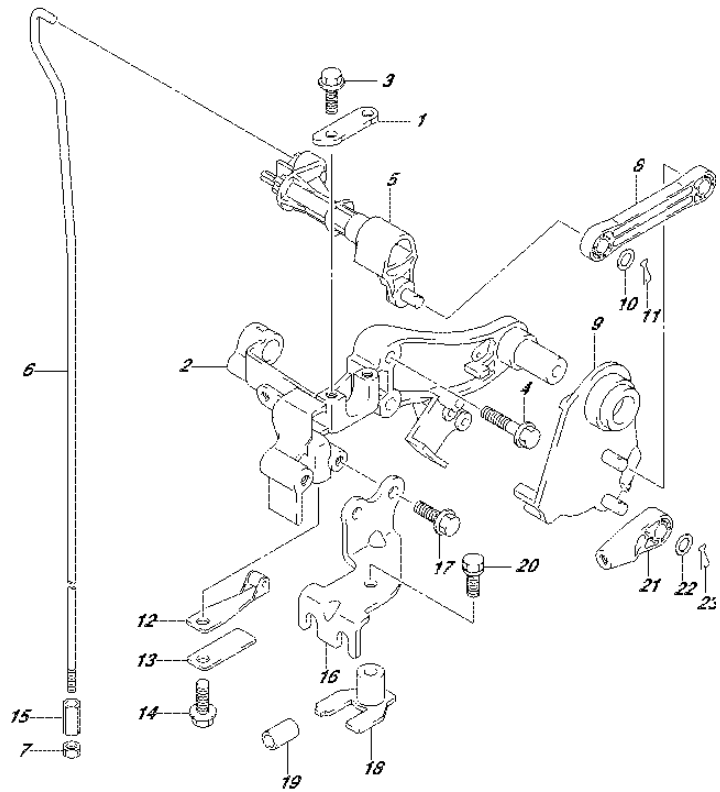

FIG.204C (2-B-2) CLUTCH SHAFT (DF40ATH E01)

REF NO.	PART NO.	DESCRIPTION	Q'TY	REMARKS
1	21126-88L00	HOLDER, CLUTCH SHAFT	1	
2	21151-88L00	HOLDER, CLUTCH LEVER	1	
3	01550-06167	BOLT	2	
4	01550-06307	BOLT	2	
5	21210-88L00	SHAFT, CLUTCH	1	
6	23111-88L10	ROD, CLUTCH (L)	1	
7	29141-93J00	NUT, CLUTCH ROD	1	
8	23115-88L00	LINK, CLUTCH LEVER	1	
9	23210-88L00	LEVER, CLUTCH CONTROL	1	
10	09160-06055	WASHER (7X12X1)	2	
11	09385-06012	CLIP	2	
12	23213-89J01	SPRING, NOTCH PLATE NO.1	1	
13	23214-89J00	SPRING, NOTCH PLATE NO.2	1	
14	01550-06127	BOLT	1	
15	23311-95J00	TURNBUCKLE, CLUTCH ROD	1	
16	67341-88L01	HOLDER, REMOCON CABLE	1	
17	01550-06167	BOLT	2	
18	67343-88L01	STOPPER, REMOCON CABLE	1	
19	09352-70103-600	HOSE (7X10.2X600)	2	L:600->14
20	01570-06167	BOLT	1	
21	67467-89J01	CONNECTOR, REMOCON CABLE	2	
22	09160-06055	WASHER (7X12X1)	2	
23	09385-06012	CLIP	2	

FIG.204D

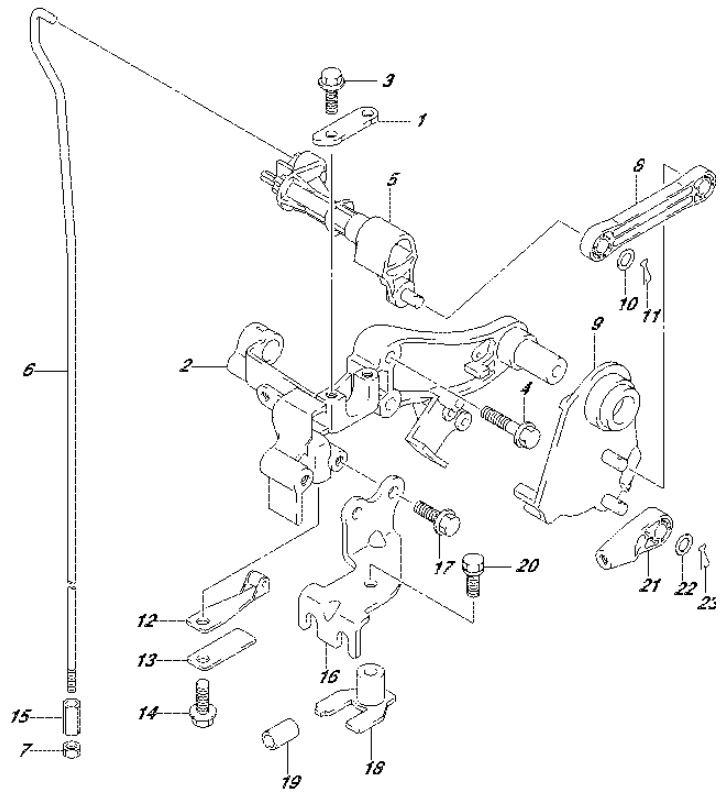

FIG.204D (2-B-3) CLUTCH SHAFT (DF40AST E34)

REF NO.	PART NO.	DESCRIPTION	Q'TY	REMARKS
1	21126-88L00	HOLDER, CLUTCH SHAFT	1	
2	21151-88L00	HOLDER, CLUTCH LEVER	1	
3	01550-06167	BOLT	2	
4	01550-06307	BOLT	2	
5	21210-88L00	SHAFT, CLUTCH	1	
6-1	23111-88L00	ROD, CLUTCH (S)	1	W/TRANSOM(S)
6-2	23111-88L10	ROD, CLUTCH (L)	1	W/TRANSOM(L)
7	29141-93J00	NUT, CLUTCH ROD	1	
8	23115-88L00	LINK, CLUTCH LEVER	1	
9	23210-88L00	LEVER, CLUTCH CONTROL	1	
10	09160-06055	WASHER (7X12X1)	2	
11	09385-06012	CLIP	2	
12	23213-89J01	SPRING, NOTCH PLATE NO.1	1	
13	23214-89J00	SPRING, NOTCH PLATE NO.2	1	
14	01550-06127	BOLT	1	
15	23311-95J00	TURNBUCKLE, CLUTCH ROD	1	
16	67341-88L01	HOLDER, REMOCON CABLE	1	
17	01550-06167	BOLT	2	
18	67343-88L01	STOPPER, REMOCON CABLE	1	
19	09352-70103-600	HOSE (7X10.2X600)	2	L:600->14
20	01570-06167	BOLT	1	
21	67467-89J01	CONNECTOR, REMOCON CABLE	2	
22	09160-06055	WASHER (7X12X1)	2	
23	09385-06012	CLIP	2	

FIG.204E

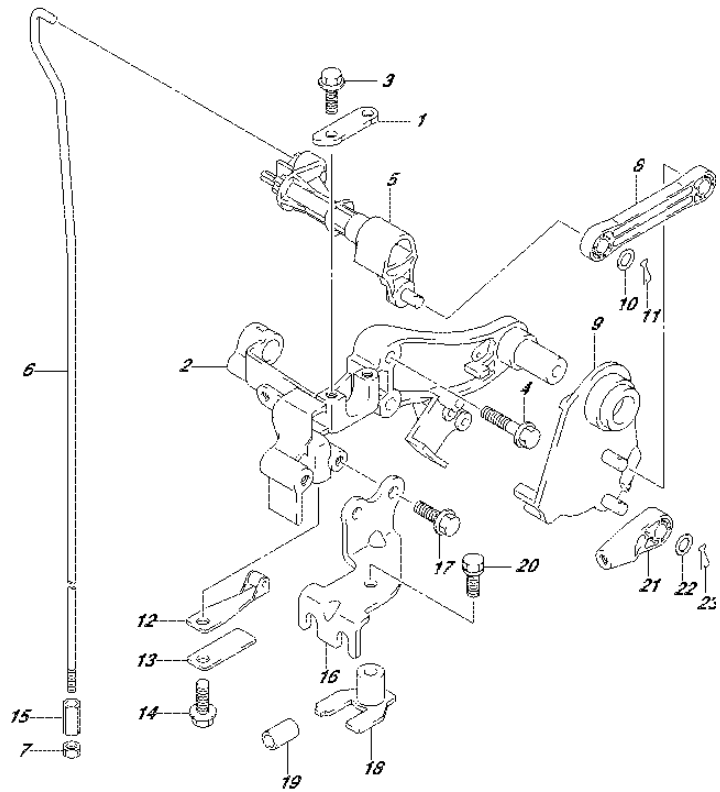

FIG.204E (2-B-4) CLUTCH SHAFT (DF50A E01)

REF NO.	PART NO.	DESCRIPTION	Q'TY	REMARKS
1	21126-88L00	HOLDER, CLUTCH SHAFT	1	
2	21151-88L00	HOLDER, CLUTCH LEVER	1	
3	01550-06167	BOLT	2	
4	01550-06307	BOLT	2	
5	21210-88L00	SHAFT, CLUTCH	1	
6-1	23111-88L00	ROD, CLUTCH (S)	1	W/TRANSOM(S)
6-2	23111-88L10	ROD, CLUTCH (L)	1	W/TRANSOM(L)
7	29141-93J00	NUT, CLUTCH ROD	1	
8	23115-88L00	LINK, CLUTCH LEVER	1	
9	23210-88L00	LEVER, CLUTCH CONTROL	1	
10	09160-06055	WASHER (7X12X1)	2	
11	09385-06012	CLIP	2	
12	23213-89J01	SPRING, NOTCH PLATE NO.1	1	
13	23214-89J00	SPRING, NOTCH PLATE NO.2	1	
14	01550-06127	BOLT	1	
15	23311-95J00	TURNBUCKLE, CLUTCH ROD	1	
16	67341-88L01	HOLDER, REMOCON CABLE	1	
17	01550-06167	BOLT	2	
18	67343-88L01	STOPPER, REMOCON CABLE	1	
19	09352-70103-600	HOSE (7X10.2X600)	2	L:600->14
20	01570-06167	BOLT	1	
21	67467-89J01	CONNECTOR, REMOCON CABLE	2	
22	09160-06055	WASHER (7X12X1)	2	
23	09385-06012	CLIP	2	

FIG.204F

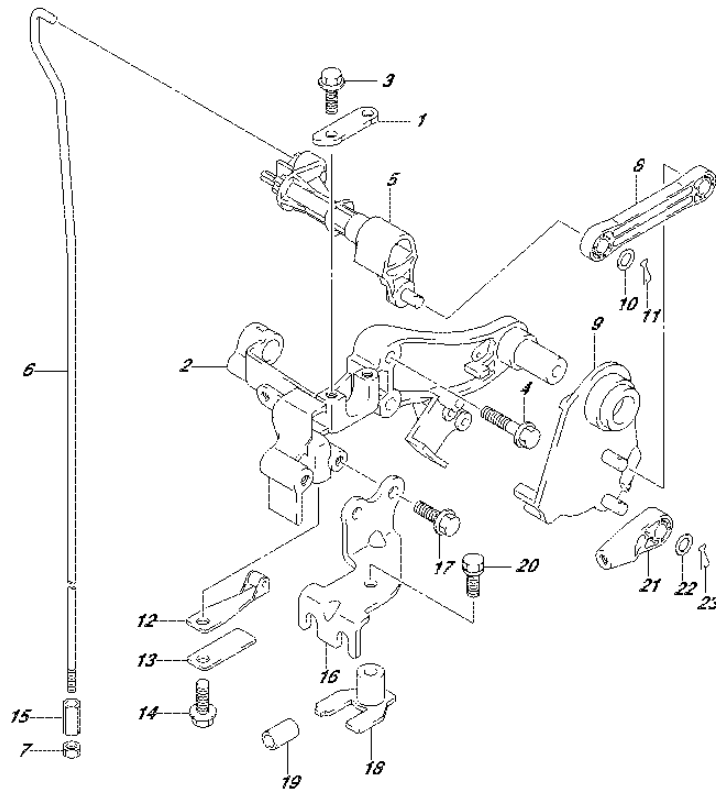

FIG.204F (2-B-5) CLUTCH SHAFT (DF50ATH E01)

REF NO.	PART NO.	DESCRIPTION	Q'TY	REMARKS
1	21126-88L00	HOLDER, CLUTCH SHAFT	1	
2	21151-88L00	HOLDER, CLUTCH LEVER	1	
3	01550-06167	BOLT	2	
4	01550-06307	BOLT	2	
5	21210-88L00	SHAFT, CLUTCH	1	
6	23111-88L10	ROD, CLUTCH (L)	1	
7	29141-93J00	NUT, CLUTCH ROD	1	
8	23115-88L00	LINK, CLUTCH LEVER	1	
9	23210-88L00	LEVER, CLUTCH CONTROL	1	
10	09160-06055	WASHER (7X12X1)	2	
11	09385-06012	CLIP	2	
12	23213-89J01	SPRING, NOTCH PLATE NO.1	1	
13	23214-89J00	SPRING, NOTCH PLATE NO.2	1	
14	01550-06127	BOLT	1	
15	23311-95J00	TURNBUCKLE, CLUTCH ROD	1	
16	67341-88L01	HOLDER, REMOCON CABLE	1	
17	01550-06167	BOLT	2	
18	67343-88L01	STOPPER, REMOCON CABLE	1	
19	09352-70103-600	HOSE (7X10.2X600)	2	L:600->14
20	01570-06167	BOLT	1	
21	67467-89J01	CONNECTOR, REMOCON CABLE	2	
22	09160-06055	WASHER (7X12X1)	2	
23	09385-06012	CLIP	2	

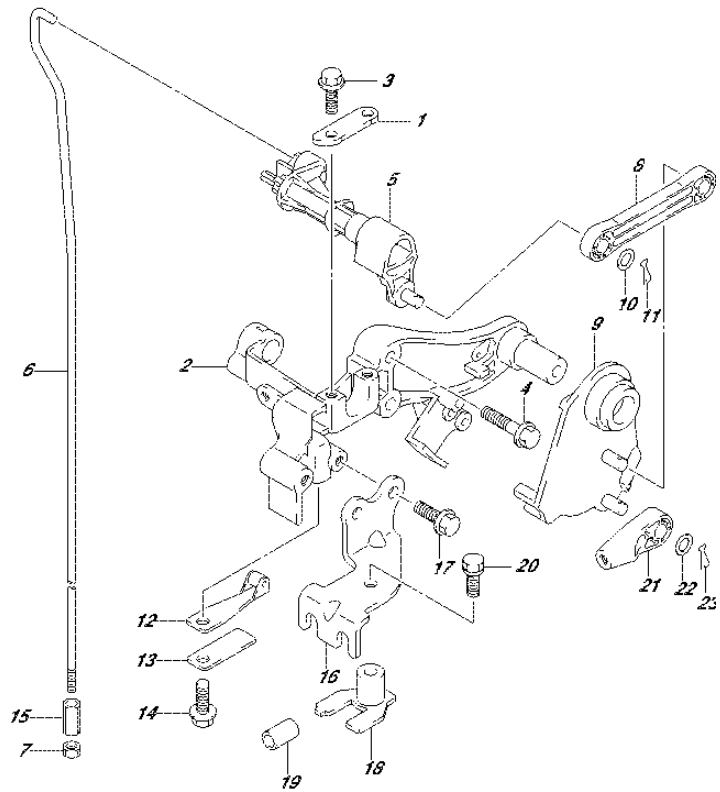

FIG.204G (2-B-6) CLUTCH SHAFT (DF60A E01)

REF NO.	PART NO.	DESCRIPTION	Q'TY	REMARKS
1	21126-88L00	HOLDER, CLUTCH SHAFT	1	
2	21151-88L00	HOLDER, CLUTCH LEVER	1	
3	01550-06167	BOLT	2	
4	01550-06307	BOLT	2	
5	21210-88L00	SHAFT, CLUTCH	1	
6-1	23111-88L00	ROD, CLUTCH (S)	1	W/TRANSOM(S)
6-2	23111-88L10	ROD, CLUTCH (L)	1	W/TRANSOM(L)
7	29141-93J00	NUT, CLUTCH ROD	1	
8	23115-88L00	LINK, CLUTCH LEVER	1	
9	23210-88L00	LEVER, CLUTCH CONTROL	1	
10	09160-06055	WASHER (7X12X1)	2	
11	09385-06012	CLIP	2	
12	23213-89J01	SPRING, NOTCH PLATE NO.1	1	
13	23214-89J00	SPRING, NOTCH PLATE NO.2	1	
14	01550-06127	BOLT	1	
15	23311-95J00	TURNBUCKLE, CLUTCH ROD	1	
16	67341-88L01	HOLDER, REMOCON CABLE	1	
17	01550-06167	BOLT	2	
18	67343-88L01	STOPPER, REMOCON CABLE	1	
19	09352-70103-600	HOSE (7X10.2X600)	2	L:600->14
20	01570-06167	BOLT	1	
21	67467-89J01	CONNECTOR, REMOCON CABLE	2	
22	09160-06055	WASHER (7X12X1)	2	
23	09385-06012	CLIP	2	

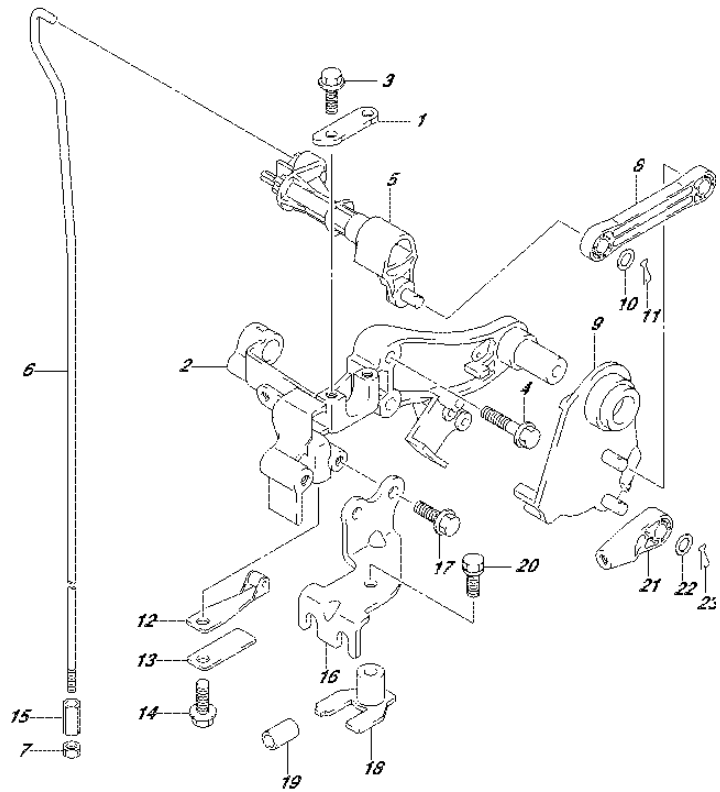

FIG.204H (2-B-7) CLUTCH SHAFT (DF60A E40)

REF NO.	PART NO.	DESCRIPTION	Q'TY	REMARKS
1	21126-88L00	HOLDER, CLUTCH SHAFT	1	
2	21151-88L00	HOLDER, CLUTCH LEVER	1	
3	01550-06167	BOLT	2	
4	01550-06307	BOLT	2	
5	21210-88L00	SHAFT, CLUTCH	1	
6	23111-88L10	ROD, CLUTCH (L)	1	
7	29141-93J00	NUT, CLUTCH ROD	1	
8	23115-88L00	LINK, CLUTCH LEVER	1	
9	23210-88L00	LEVER, CLUTCH CONTROL	1	
10	09160-06055	WASHER (7X12X1)	2	
11	09385-06012	CLIP	2	
12	23213-89J01	SPRING, NOTCH PLATE NO.1	1	
13	23214-89J00	SPRING, NOTCH PLATE NO.2	1	
14	01550-06127	BOLT	1	
15	23311-95J00	TURNBUCKLE, CLUTCH ROD	1	
16	67341-88L01	HOLDER, REMOCON CABLE	1	
17	01550-06167	BOLT	2	
18	67343-88L01	STOPPER, REMOCON CABLE	1	
19	09352-70103-600	HOSE (7X10.2X600)	2	L:600->14
20	01570-06167	BOLT	1	
21	67467-89J01	CONNECTOR, REMOCON CABLE	2	
22	09160-06055	WASHER (7X12X1)	2	
23	09385-06012	CLIP	2	

FIG.204J

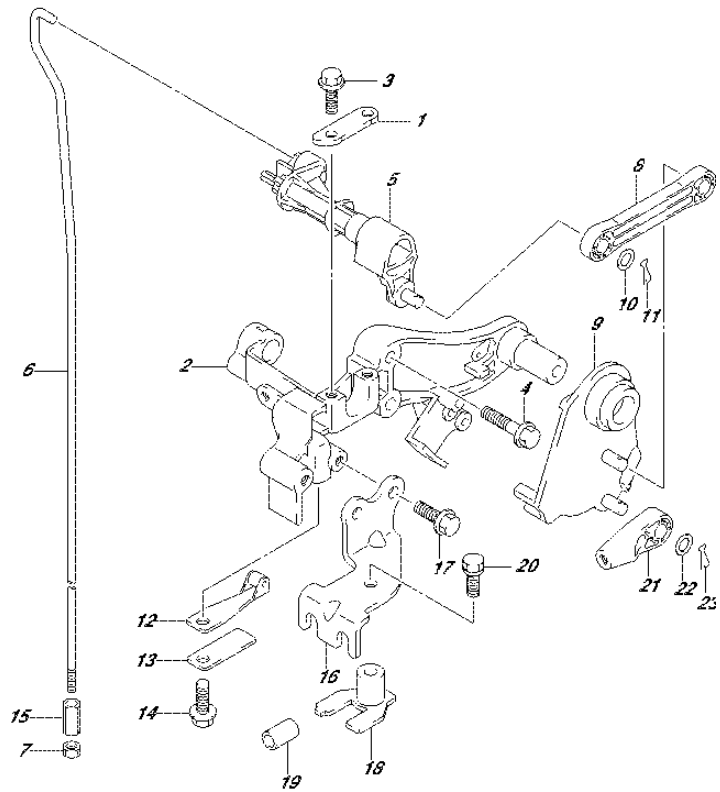

FIG.204J (2-B-8) CLUTCH SHAFT (DF60AQH E01)

REF NO.	PART NO.	DESCRIPTION	Q'TY	REMARKS
1	21126-88L00	HOLDER, CLUTCH SHAFT	1	
2	21151-88L00	HOLDER, CLUTCH LEVER	1	
3	01550-06167	BOLT	2	
4	01550-06307	BOLT	2	
5	21210-88L00	SHAFT, CLUTCH	1	
6	23111-88L10	ROD, CLUTCH (L)	1	
7	29141-93J00	NUT, CLUTCH ROD	1	
8	23115-88L00	LINK, CLUTCH LEVER	1	
9	23210-88L00	LEVER, CLUTCH CONTROL	1	
10	09160-06055	WASHER (7X12X1)	2	
11	09385-06012	CLIP	2	
12	23213-89J01	SPRING, NOTCH PLATE NO.1	1	
13	23214-89J00	SPRING, NOTCH PLATE NO.2	1	
14	01550-06127	BOLT	1	
15	23311-95J00	TURNBUCKLE, CLUTCH ROD	1	
16	67341-88L01	HOLDER, REMOCON CABLE	1	
17	01550-06167	BOLT	2	
18	67343-88L01	STOPPER, REMOCON CABLE	1	
19	09352-70103-600	HOSE (7X10.2X600)	2	L:600->14
20	01570-06167	BOLT	1	
21	67467-89J01	CONNECTOR, REMOCON CABLE	2	
22	09160-06055	WASHER (7X12X1)	2	
23	09385-06012	CLIP	2	

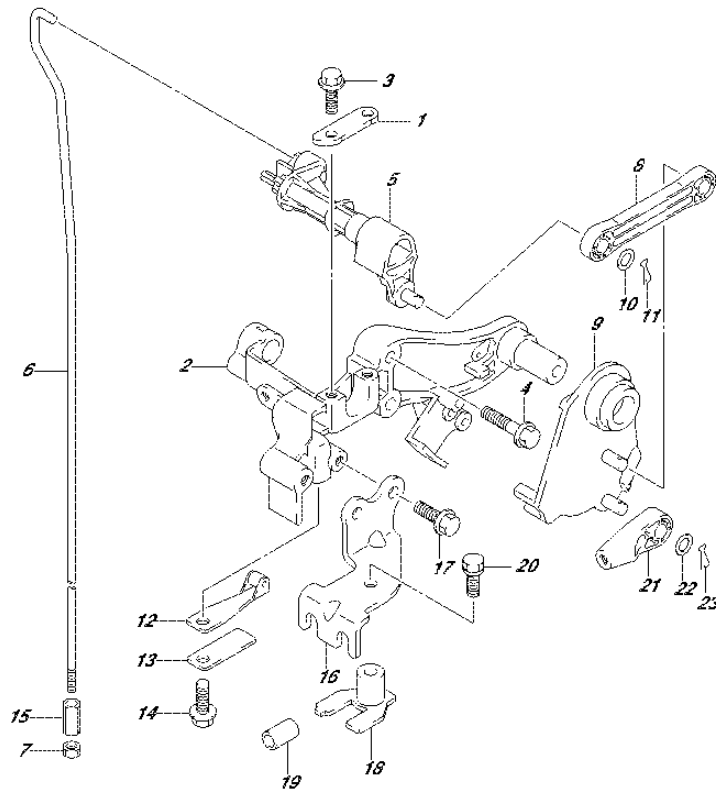

FIG.204K (2-B-9) CLUTCH SHAFT (DF60AQH E40)

REF NO.	PART NO.	DESCRIPTION	Q'TY	REMARKS
1	21126-88L00	HOLDER, CLUTCH SHAFT	1	
2	21151-88L00	HOLDER, CLUTCH LEVER	1	
3	01550-06167	BOLT	2	
4	01550-06307	BOLT	2	
5	21210-88L00	SHAFT, CLUTCH	1	
6	23111-88L10	ROD, CLUTCH (L)	1	
7	29141-93J00	NUT, CLUTCH ROD	1	
8	23115-88L00	LINK, CLUTCH LEVER	1	
9	23210-88L00	LEVER, CLUTCH CONTROL	1	
10	09160-06055	WASHER (7X12X1)	2	
11	09385-06012	CLIP	2	
12	23213-89J01	SPRING, NOTCH PLATE NO.1	1	
13	23214-89J00	SPRING, NOTCH PLATE NO.2	1	
14	01550-06127	BOLT	1	
15	23311-95J00	TURNBUCKLE, CLUTCH ROD	1	
16	67341-88L01	HOLDER, REMOCON CABLE	1	
17	01550-06167	BOLT	2	
18	67343-88L01	STOPPER, REMOCON CABLE	1	
19	09352-70103-600	HOSE (7X10.2X600)	2	L:600->14
20	01570-06167	BOLT	1	
21	67467-89J01	CONNECTOR, REMOCON CABLE	2	
22	09160-06055	WASHER (7X12X1)	2	
23	09385-06012	CLIP	2	

FIG.204L

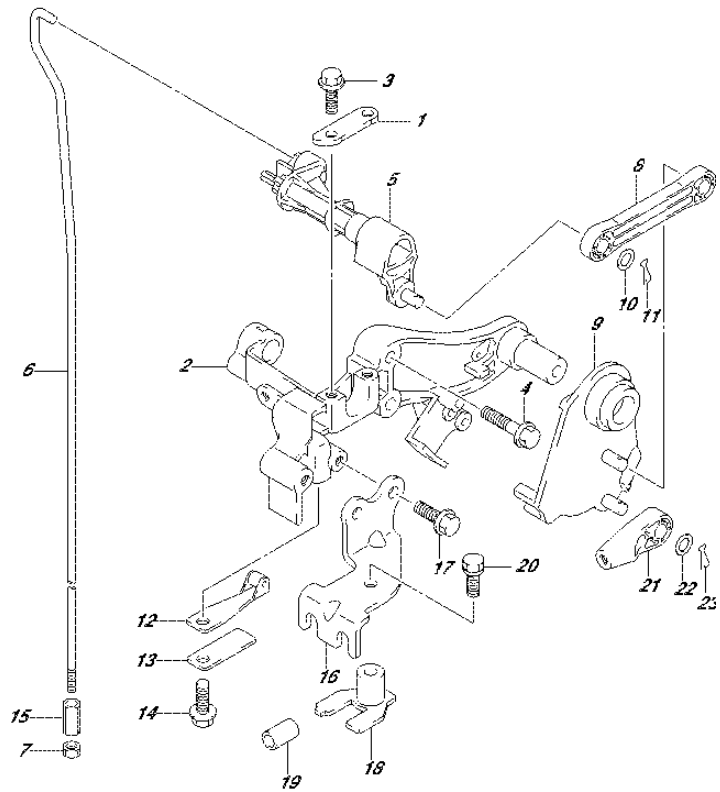

FIG.204L (2-B-10) CLUTCH SHAFT (DF60ATH E01)

REF NO.	PART NO.	DESCRIPTION	Q'TY	REMARKS
1	21126-88L00	HOLDER, CLUTCH SHAFT	1	
2	21151-88L00	HOLDER, CLUTCH LEVER	1	
3	01550-06167	BOLT	2	
4	01550-06307	BOLT	2	
5	21210-88L00	SHAFT, CLUTCH	1	
6	23111-88L10	ROD, CLUTCH (L)	1	
7	29141-93J00	NUT, CLUTCH ROD	1	
8	23115-88L00	LINK, CLUTCH LEVER	1	
9	23210-88L00	LEVER, CLUTCH CONTROL	1	
10	09160-06055	WASHER (7X12X1)	2	
11	09385-06012	CLIP	2	
12	23213-89J01	SPRING, NOTCH PLATE NO.1	1	
13	23214-89J00	SPRING, NOTCH PLATE NO.2	1	
14	01550-06127	BOLT	1	
15	23311-95J00	TURNBUCKLE, CLUTCH ROD	1	
16	67341-88L01	HOLDER, REMOCON CABLE	1	
17	01550-06167	BOLT	2	
18	67343-88L01	STOPPER, REMOCON CABLE	1	
19	09352-70103-600	HOSE (7X10.2X600)	2	L:600->14
20	01570-06167	BOLT	1	
21	67467-89J01	CONNECTOR, REMOCON CABLE	2	
22	09160-06055	WASHER (7X12X1)	2	
23	09385-06012	CLIP	2	

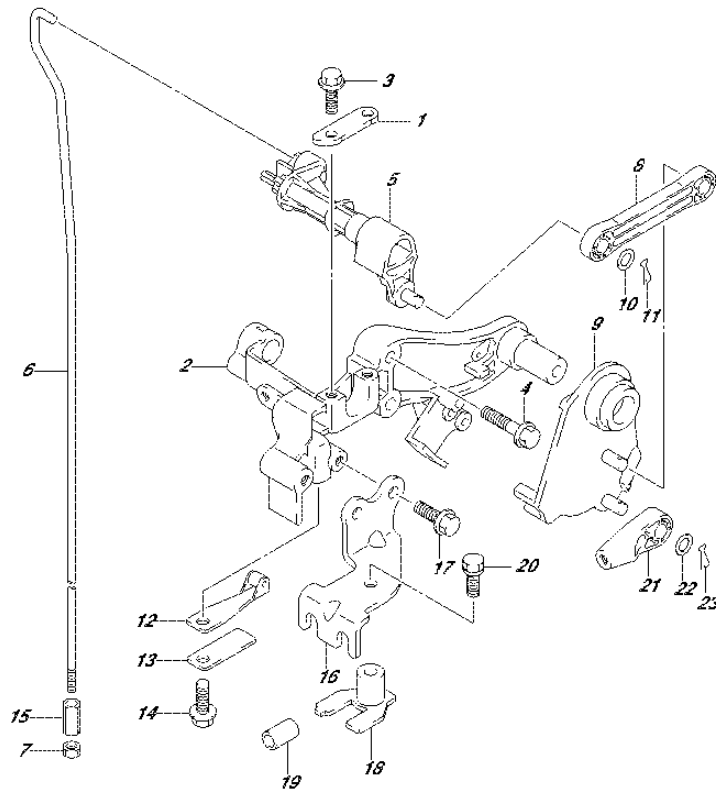

FIG.204M (2-B-11) CLUTCH SHAFT (DF60ATH E40)

REF NO.	PART NO.	DESCRIPTION	Q'TY	REMARKS
1	21126-88L00	HOLDER, CLUTCH SHAFT	1	
2	21151-88L00	HOLDER, CLUTCH LEVER	1	
3	01550-06167	BOLT	2	
4	01550-06307	BOLT	2	
5	21210-88L00	SHAFT, CLUTCH	1	
6	23111-88L10	ROD, CLUTCH (L)	1	
7	29141-93J00	NUT, CLUTCH ROD	1	
8	23115-88L00	LINK, CLUTCH LEVER	1	
9	23210-88L00	LEVER, CLUTCH CONTROL	1	
10	09160-06055	WASHER (7X12X1)	2	
11	09385-06012	CLIP	2	
12	23213-89J01	SPRING, NOTCH PLATE NO.1	1	
13	23214-89J00	SPRING, NOTCH PLATE NO.2	1	
14	01550-06127	BOLT	1	
15	23311-95J00	TURNBUCKLE, CLUTCH ROD	1	
16	67341-88L01	HOLDER, REMOCON CABLE	1	
17	01550-06167	BOLT	2	
18	67343-88L01	STOPPER, REMOCON CABLE	1	
19	09352-70103-600	HOSE (7X10.2X600)	2	L:600->14
20	01570-06167	BOLT	1	
21	67467-89J01	CONNECTOR, REMOCON CABLE	2	
22	09160-06055	WASHER (7X12X1)	2	
23	09385-06012	CLIP	2	

FIG.204N

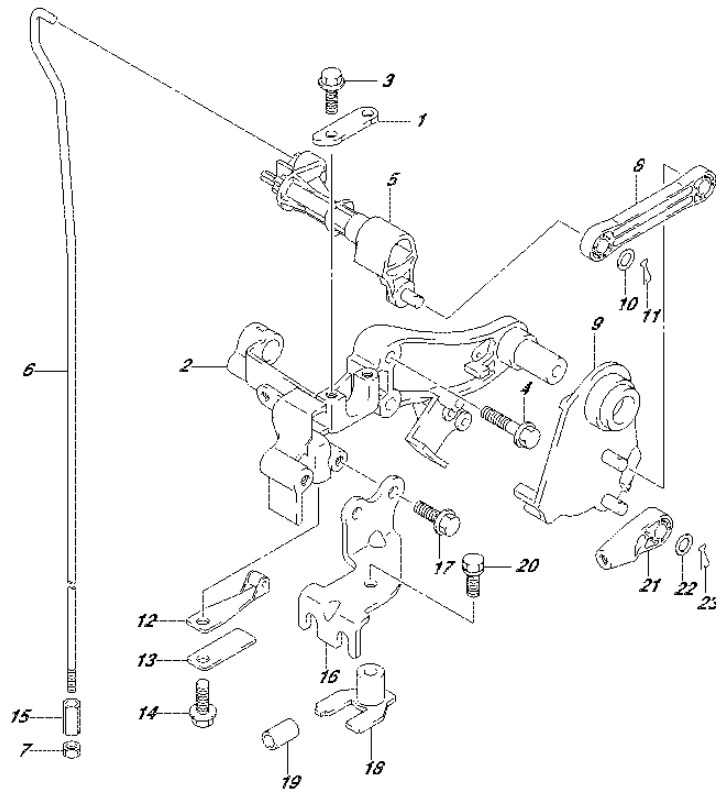

FIG.204N (2-B-12) CLUTCH SHAFT (DF50AVT E01)

REF NO.	PART NO.	DESCRIPTION	Q'TY	REMARKS
1	21126-88L00	HOLDER, CLUTCH SHAFT	1	
2	21151-88L00	HOLDER, CLUTCH LEVER	1	
3	01550-06167	BOLT	2	
4	01550-06307	BOLT	2	
5	21210-88L00	SHAFT, CLUTCH	1	
6	23111-88L00	ROD, CLUTCH (S)	1	
7	29141-93J00	NUT, CLUTCH ROD	1	
8	23115-88L00	LINK, CLUTCH LEVER	1	
9	23210-88L00	LEVER, CLUTCH CONTROL	1	
10	09160-06055	WASHER (7X12X1)	2	
11	09385-06012	CLIP	2	
12	23213-89J01	SPRING, NOTCH PLATE NO.1	1	
13	23214-89J00	SPRING, NOTCH PLATE NO.2	1	
14	01550-06127	BOLT	1	
15	23311-95J00	TURNBUCKLE, CLUTCH ROD	1	
16	67341-88L01	HOLDER, REMOCON CABLE	1	
17	01550-06167	BOLT	2	
18	67343-88L01	STOPPER, REMOCON CABLE	1	
19	09352-70103-600	HOSE (7X10.2X600)	2	L:600->14
20	01570-06167	BOLT	1	
21	67467-89J01	CONNECTOR, REMOCON CABLE	2	
22	09160-06055	WASHER (7X12X1)	2	
23	09385-06012	CLIP	2	

FIG.204P

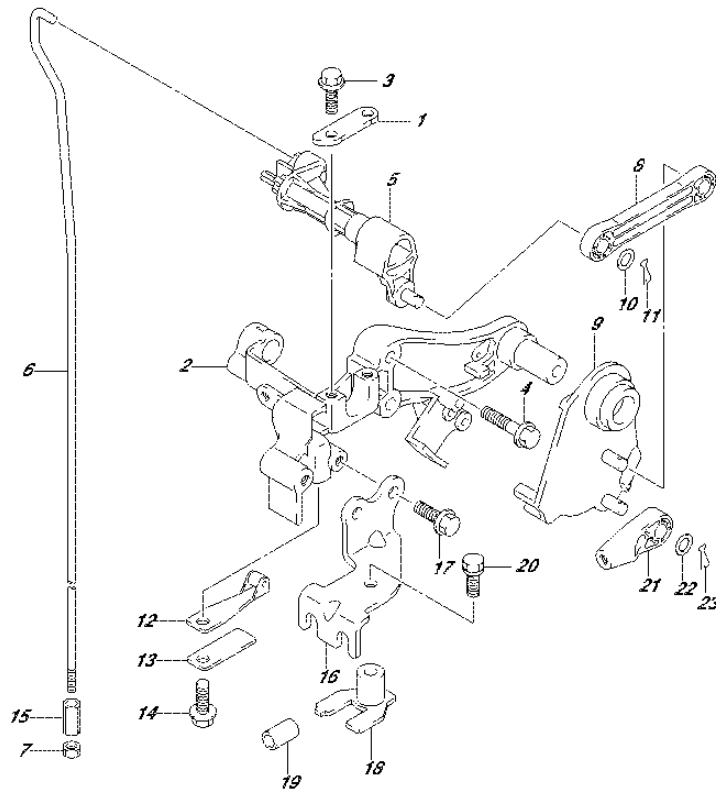

FIG.204P (2-B-13) CLUTCH SHAFT (DF50AVTH E01)

REF NO.	PART NO.	DESCRIPTION	Q'TY	REMARKS
1	21126-88L00	HOLDER, CLUTCH SHAFT	1	
2	21151-88L00	HOLDER, CLUTCH LEVER	1	
3	01550-06167	BOLT	2	
4	01550-06307	BOLT	2	
5	21210-88L00	SHAFT, CLUTCH	1	
6	23111-88L00	ROD, CLUTCH (S)	1	
7	29141-93J00	NUT, CLUTCH ROD	1	
8	23115-88L00	LINK, CLUTCH LEVER	1	
9	23210-88L00	LEVER, CLUTCH CONTROL	1	
10	09160-06055	WASHER (7X12X1)	2	
11	09385-06012	CLIP	2	
12	23213-89J01	SPRING, NOTCH PLATE NO.1	1	
13	23214-89J00	SPRING, NOTCH PLATE NO.2	1	
14	01550-06127	BOLT	1	
15	23311-95J00	TURNBUCKLE, CLUTCH ROD	1	
16	67341-88L01	HOLDER, REMOCON CABLE	1	
17	01550-06167	BOLT	2	
18	67343-88L01	STOPPER, REMOCON CABLE	1	
19	09352-70103-600	HOSE (7X10.2X600)	2	L:600->14
20	01570-06167	BOLT	1	
21	67467-89J01	CONNECTOR, REMOCON CABLE	2	
22	09160-06055	WASHER (7X12X1)	2	
23	09385-06012	CLIP	2	

FIG.204R

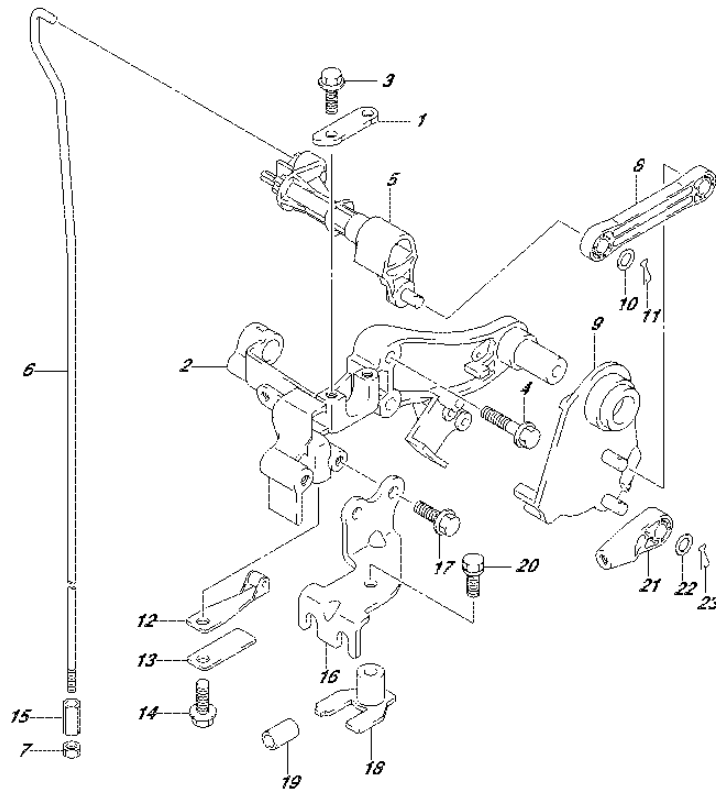

FIG.204R (2-B-14) CLUTCH SHAFT (DF60AVT E01)

REF NO.	PART NO.	DESCRIPTION	Q'TY	REMARKS
1	21126-88L00	HOLDER, CLUTCH SHAFT	1	
2	21151-88L00	HOLDER, CLUTCH LEVER	1	
3	01550-06167	BOLT	2	
4	01550-06307	BOLT	2	
5	21210-88L00	SHAFT, CLUTCH	1	
6-1	23111-88L00	ROD, CLUTCH (S)	1	W/TRANSOM(L)
6-2	23111-88L10	ROD, CLUTCH (L)	1	W/TRANSOM(X)
7	29141-93J00	NUT, CLUTCH ROD	1	
8	23115-88L00	LINK, CLUTCH LEVER	1	
9	23210-88L00	LEVER, CLUTCH CONTROL	1	
10	09160-06055	WASHER (7X12X1)	2	
11	09385-06012	CLIP	2	
12	23213-89J01	SPRING, NOTCH PLATE NO.1	1	
13	23214-89J00	SPRING, NOTCH PLATE NO.2	1	
14	01550-06127	BOLT	1	
15	23311-95J00	TURNBUCKLE, CLUTCH ROD	1	
16	67341-88L01	HOLDER, REMOCON CABLE	1	
17	01550-06167	BOLT	2	
18	67343-88L01	STOPPER, REMOCON CABLE	1	
19	09352-70103-600	HOSE (7X10.2X600)	2	L:600->14
20	01570-06167	BOLT	1	
21	67467-89J01	CONNECTOR, REMOCON CABLE	2	
22	09160-06055	WASHER (7X12X1)	2	
23	09385-06012	CLIP	2	

FIG.204S

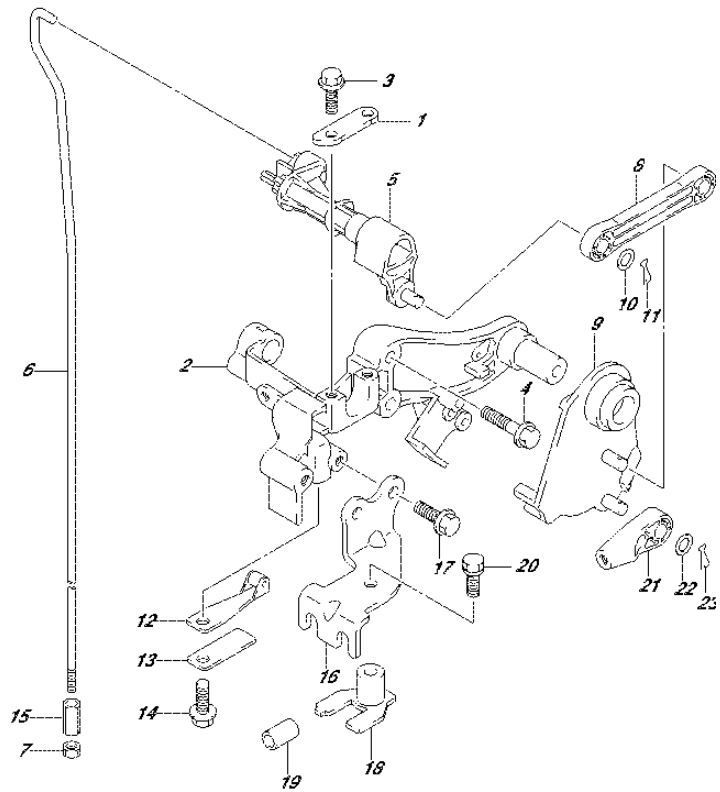

FIG.204S (2-B-15) CLUTCH SHAFT (DF60AVT E40)

REF NO.	PART NO.	DESCRIPTION	Q'TY	REMARKS
1	21126-88L00	HOLDER, CLUTCH SHAFT	1	
2	21151-88L00	HOLDER, CLUTCH LEVER	1	
3	01550-06167	BOLT	2	
4	01550-06307	BOLT	2	
5	21210-88L00	SHAFT, CLUTCH	1	
6-1	23111-88L00	ROD, CLUTCH (S)	1	W/TRANSOM(L)
6-2	23111-88L10	ROD, CLUTCH (L)	1	W/TRANSOM(X)
7	29141-93J00	NUT, CLUTCH ROD	1	
8	23115-88L00	LINK, CLUTCH LEVER	1	
9	23210-88L00	LEVER, CLUTCH CONTROL	1	
10	09160-06055	WASHER (7X12X1)	2	
11	09385-06012	CLIP	2	
12	23213-89J01	SPRING, NOTCH PLATE NO.1	1	
13	23214-89J00	SPRING, NOTCH PLATE NO.2	1	
14	01550-06127	BOLT	1	
15	23311-95J00	TURNBUCKLE, CLUTCH ROD	1	
16	67341-88L01	HOLDER, REMOCON CABLE	1	
17	01550-06167	BOLT	2	
18	67343-88L01	STOPPER, REMOCON CABLE	1	
19	09352-70103-600	HOSE (7X10.2X600)	2	L:600->14
20	01570-06167	BOLT	1	
21	67467-89J01	CONNECTOR, REMOCON CABLE	2	
22	09160-06055	WASHER (7X12X1)	2	
23	09385-06012	CLIP	2	

FIG.204T

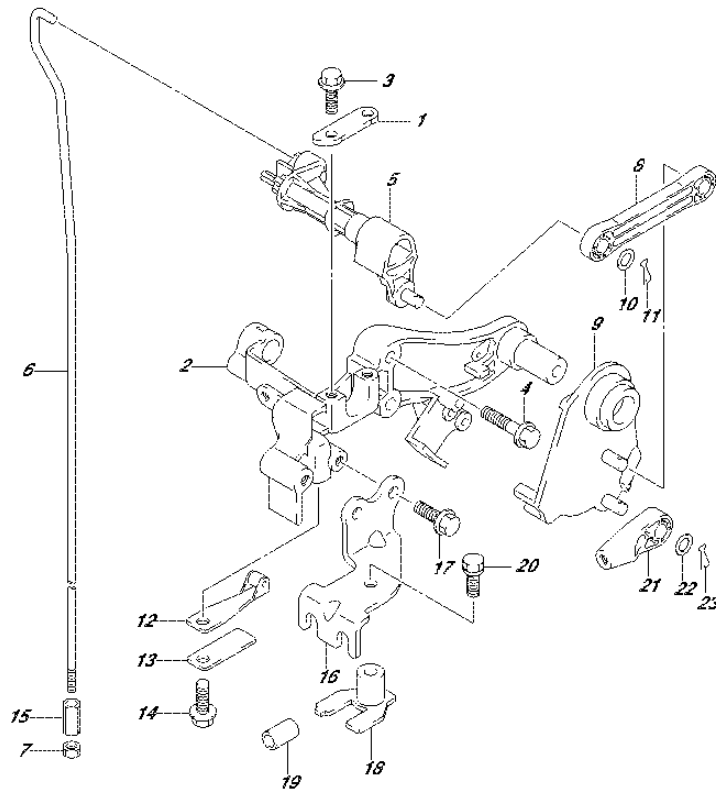

FIG.204T (2-C-2) CLUTCH SHAFT (DF60AVTH E01)

REF NO.	PART NO.	DESCRIPTION	Q'TY	REMARKS
1	21126-88L00	HOLDER, CLUTCH SHAFT	1	
2	21151-88L00	HOLDER, CLUTCH LEVER	1	
3	01550-06167	BOLT	2	
4	01550-06307	BOLT	2	
5	21210-88L00	SHAFT, CLUTCH	1	
6-1	23111-88L00	ROD, CLUTCH (S)	1	W/TRANSOM(L)
6-2	23111-88L10	ROD, CLUTCH (L)	1	W/TRANSOM(X)
7	29141-93J00	NUT, CLUTCH ROD	1	
8	23115-88L00	LINK, CLUTCH LEVER	1	
9	23210-88L00	LEVER, CLUTCH CONTROL	1	
10	09160-06055	WASHER (7X12X1)	2	
11	09385-06012	CLIP	2	
12	23213-89J01	SPRING, NOTCH PLATE NO.1	1	
13	23214-89J00	SPRING, NOTCH PLATE NO.2	1	
14	01550-06127	BOLT	1	
15	23311-95J00	TURNBUCKLE, CLUTCH ROD	1	
16	67341-88L01	HOLDER, REMOCON CABLE	1	
17	01550-06167	BOLT	2	
18	67343-88L01	STOPPER, REMOCON CABLE	1	
19	09352-70103-600	HOSE (7X10.2X600)	2	L:600->14
20	01570-06167	BOLT	1	
21	67467-89J01	CONNECTOR, REMOCON CABLE	2	
22	09160-06055	WASHER (7X12X1)	2	
23	09385-06012	CLIP	2	

FIG.204U

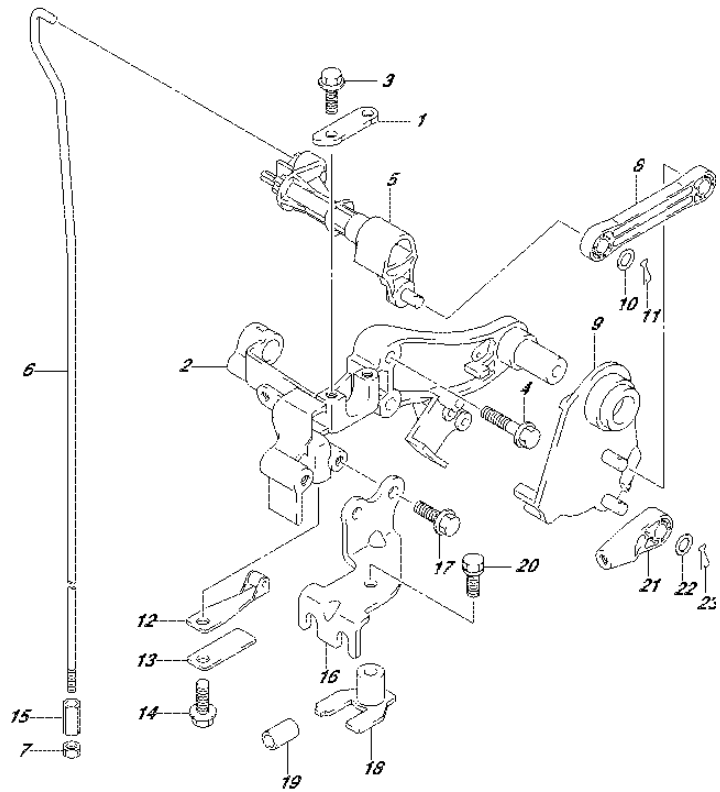

FIG.204U (2-C-3) CLUTCH SHAFT (DF60AVTH E40)

REF NO.	PART NO.	DESCRIPTION	Q'TY	REMARKS
1	21126-88L00	HOLDER, CLUTCH SHAFT	1	
2	21151-88L00	HOLDER, CLUTCH LEVER	1	
3	01550-06167	BOLT	2	
4	01550-06307	BOLT	2	
5	21210-88L00	SHAFT, CLUTCH	1	
6-1	23111-88L00	ROD, CLUTCH (S)	1	W/TRANSOM(L)
6-2	23111-88L10	ROD, CLUTCH (L)	1	W/TRANSOM(X)
7	29141-93J00	NUT, CLUTCH ROD	1	
8	23115-88L00	LINK, CLUTCH LEVER	1	
9	23210-88L00	LEVER, CLUTCH CONTROL	1	
10	09160-06055	WASHER (7X12X1)	2	
11	09385-06012	CLIP	2	
12	23213-89J01	SPRING, NOTCH PLATE NO.1	1	
13	23214-89J00	SPRING, NOTCH PLATE NO.2	1	
14	01550-06127	BOLT	1	
15	23311-95J00	TURNBUCKLE, CLUTCH ROD	1	
16	67341-88L01	HOLDER, REMOCON CABLE	1	
17	01550-06167	BOLT	2	
18	67343-88L01	STOPPER, REMOCON CABLE	1	
19	09352-70103-600	HOSE (7X10.2X600)	2	L:600->14
20	01570-06167	BOLT	1	
21	67467-89J01	CONNECTOR, REMOCON CABLE	2	
22	09160-06055	WASHER (7X12X1)	2	
23	09385-06012	CLIP	2	

FIG.206A

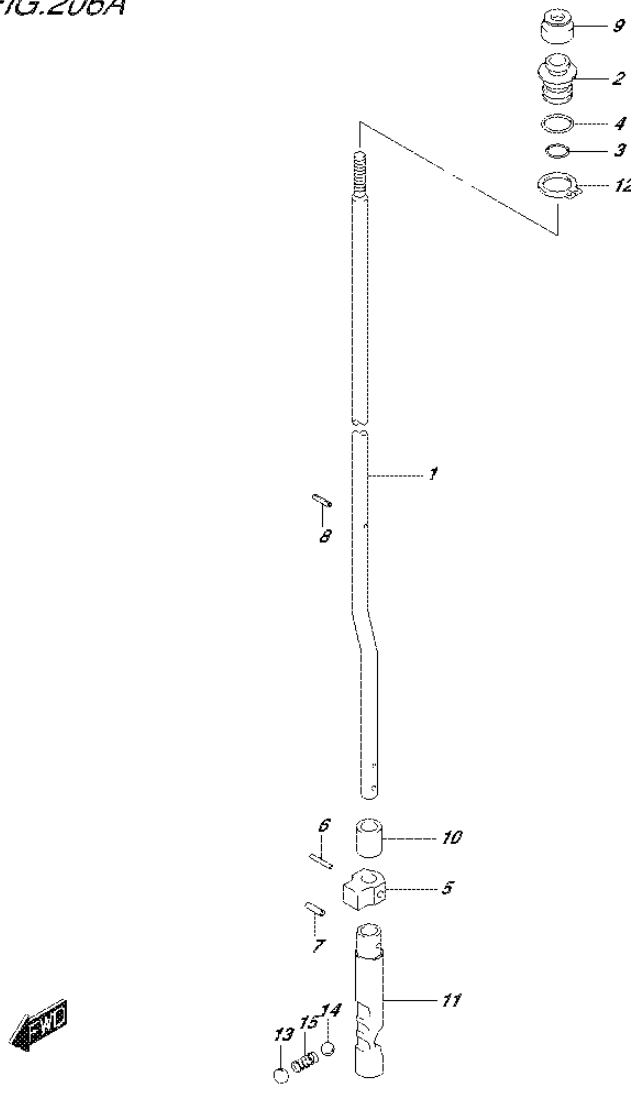

FIG.206A (2-C-4) CLUTCH ROD (DF40A E01)

REF NO.	PART NO.	DESCRIPTION	Q'TY	REMARKS
1-1	25111-88L00	ROD, SHIFT (S)	1	W/TRANSOM(S)
1-2	25111-88L10	ROD, SHIFT (L)	1	W/TRANSOM(L)
2	25211-87J00	GUIDE, SHIFT ROD	1	
3	09280-08005	O RING (D:1.7,ID:7.7)	1	
4	09280-11001	O RING (D:2.4,ID:10.8)	1	
5	25212-94401	GUIDE, SHIFT ROD LOWER	1	
6	09205-02013	SPRING PIN (2.5X16)	1	
7	09205-03021	SPRING PIN (3.5X12)	1	
8	09205-02004	SPRING PIN (2.5X12)	1	
9	25223-94400	SEAL, SHIFT ROD DUST	1	
10	25232-96302	MAGNET, GEAR CASE	1	
11	25311-88L00	CAM, SHIFT	1	
12	08331-3115A	CIRCLIP	1	
13	21121-93300	PLATE, DETENT SPRING	1	
14	09260-10005	BALL	1	
15	09440-07078	SPRING	1	

FIG.206B

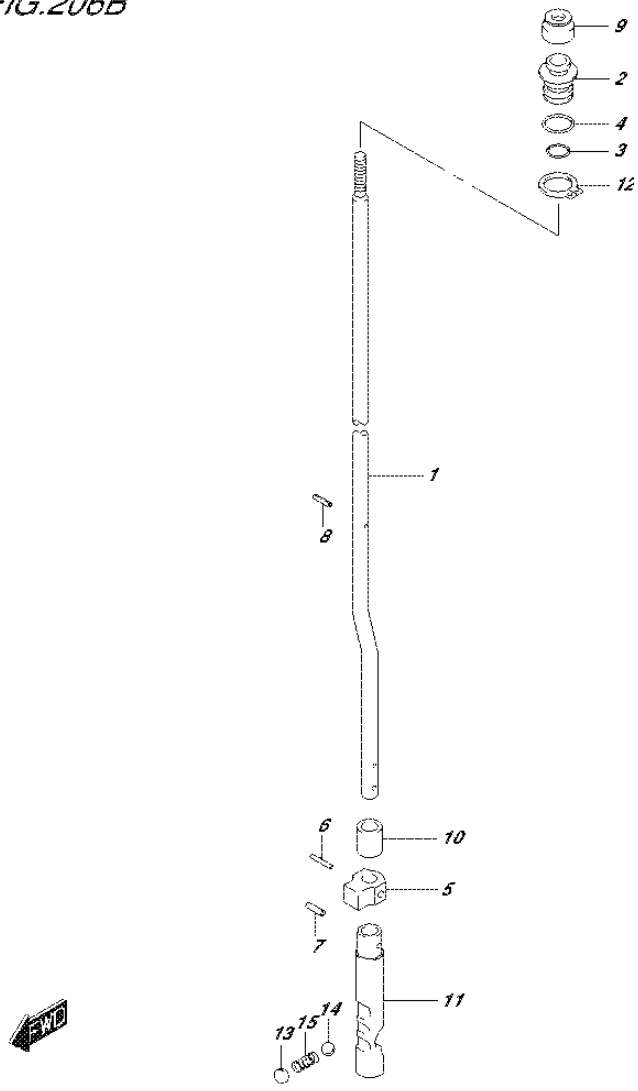

FIG.206B (2-C-5) CLUTCH ROD (DF40AQH E01)

REF NO.	PART NO.	DESCRIPTION	Q'TY	REMARKS
1	25111-88L10	ROD, SHIFT (L)	1	
2	25211-87J00	GUIDE, SHIFT ROD	1	
3	09280-08005	O RING (D:1.7,ID:7.7)	1	
4	09280-11001	O RING (D:2.4,ID:10.8)	1	
5	25212-94401	GUIDE, SHIFT ROD LOWER	1	
6	09205-02013	SPRING PIN (2.5X16)	1	
7	09205-03021	SPRING PIN (3.5X12)	1	
8	09205-02004	SPRING PIN (2.5X12)	1	
9	25223-94400	SEAL, SHIFT ROD DUST	1	
10	25232-96302	MAGNET, GEAR CASE	1	
11	25311-88L00	CAM, SHIFT	1	
12	08331-3115A	CIRCLIP	1	
13	21121-93300	PLATE, DETENT SPRING	1	
14	09260-10005	BALL	1	
15	09440-07078	SPRING	1	

FIG.206C

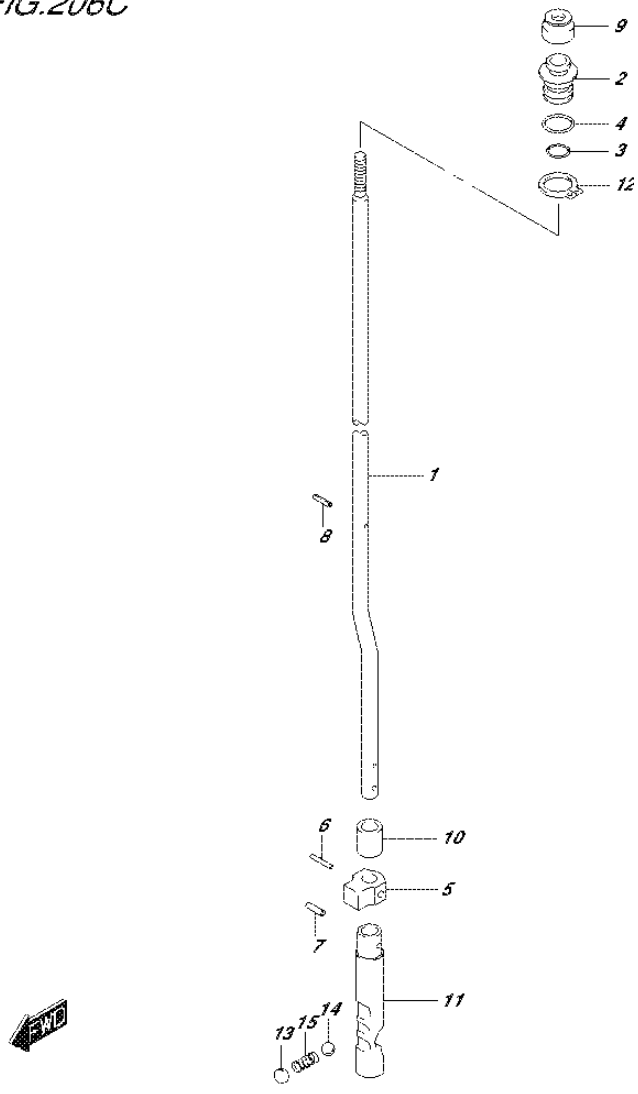

FIG.206C (2-C-6) CLUTCH ROD (DF40ATH E01)

REF NO.	PART NO.	DESCRIPTION	Q'TY	REMARKS
1	25111-88L10	ROD, SHIFT (L)	1	
2	25211-87J00	GUIDE, SHIFT ROD	1	
3	09280-08005	O RING (D:1.7,ID:7.7)	1	
4	09280-11001	O RING (D:2.4,ID:10.8)	1	
5	25212-94401	GUIDE, SHIFT ROD LOWER	1	
6	09205-02013	SPRING PIN (2.5X16)	1	
7	09205-03021	SPRING PIN (3.5X12)	1	
8	09205-02004	SPRING PIN (2.5X12)	1	
9	25223-94400	SEAL, SHIFT ROD DUST	1	
10	25232-96302	MAGNET, GEAR CASE	1	
11	25311-88L00	CAM, SHIFT	1	
12	08331-3115A	CIRCLIP	1	
13	21121-93300	PLATE, DETENT SPRING	1	
14	09260-10005	BALL	1	
15	09440-07078	SPRING	1	

FIG.206D

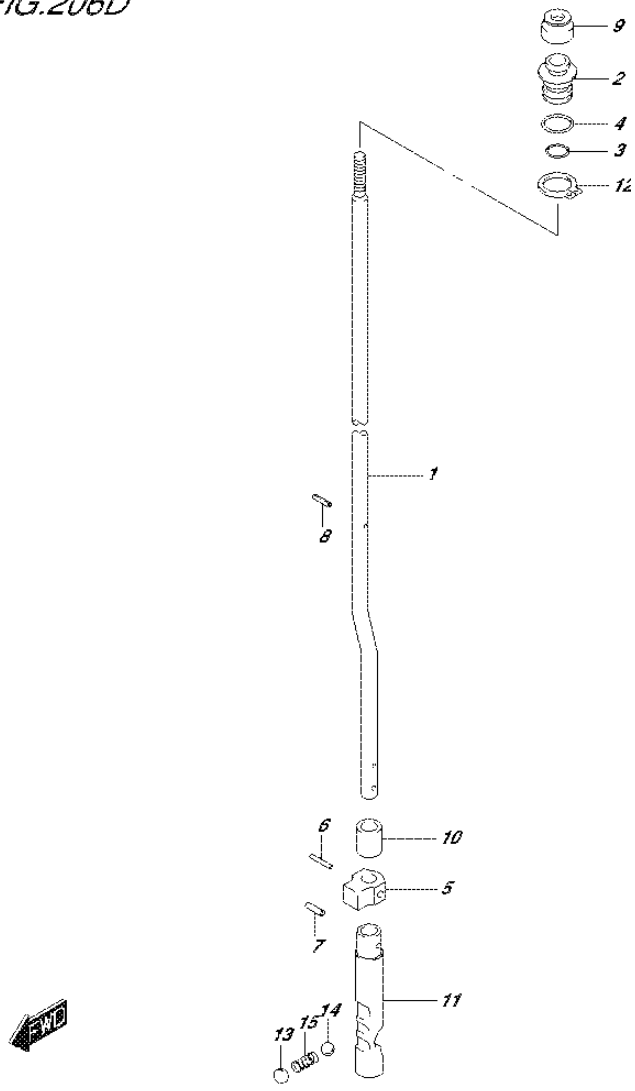

FIG.206D (2-C-7) CLUTCH ROD (DF40AST E34)

REF NO.	PART NO.	DESCRIPTION	Q'TY	REMARKS
1-1	25111-88L00	ROD, SHIFT (S)	1	W/TRANSOM(S)
1-2	25111-88L10	ROD, SHIFT (L)	1	W/TRANSOM(L)
2	25211-87J00	GUIDE, SHIFT ROD	1	
3	09280-08005	O RING (D:1.7,ID:7.7)	1	
4	09280-11001	O RING (D:2.4,ID:10.8)	1	
5	25212-94401	GUIDE, SHIFT ROD LOWER	1	
6	09205-02013	SPRING PIN (2.5X16)	1	
7	09205-03021	SPRING PIN (3.5X12)	1	
8	09205-02004	SPRING PIN (2.5X12)	1	
9	25223-94400	SEAL, SHIFT ROD DUST	1	
10	25232-96302	MAGNET, GEAR CASE	1	
11	25311-88L00	CAM, SHIFT	1	
12	08331-3115A	CIRCLIP	1	
13	21121-93300	PLATE, DETENT SPRING	1	
14	09260-10005	BALL	1	
15	09440-07078	SPRING	1	

FIG.206E

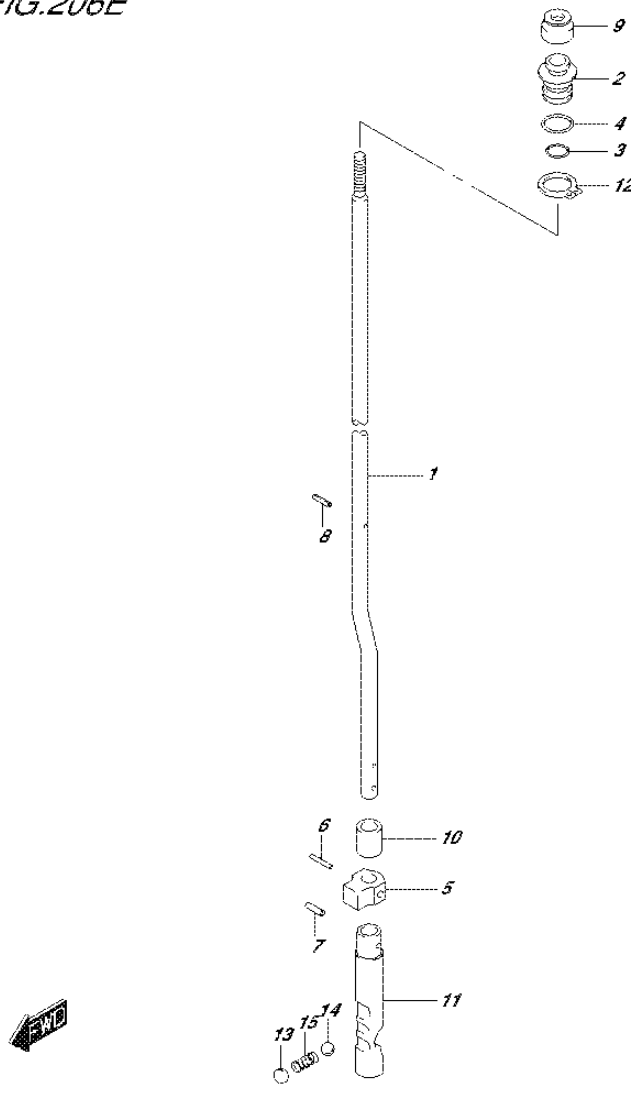

FIG.206E (2-C-8) CLUTCH ROD (DF50A E01)

REF NO.	PART NO.	DESCRIPTION	Q'TY	REMARKS
1-1	25111-88L00	ROD, SHIFT (S)	1	W/TRANSOM(S)
1-2	25111-88L10	ROD, SHIFT (L)	1	W/TRANSOM(L)
2	25211-87J00	GUIDE, SHIFT ROD	1	
3	09280-08005	O RING (D:1.7,ID:7.7)	1	
4	09280-11001	O RING (D:2.4,ID:10.8)	1	
5	25212-94401	GUIDE, SHIFT ROD LOWER	1	
6	09205-02013	SPRING PIN (2.5X16)	1	
7	09205-03021	SPRING PIN (3.5X12)	1	
8	09205-02004	SPRING PIN (2.5X12)	1	
9	25223-94400	SEAL, SHIFT ROD DUST	1	
10	25232-96302	MAGNET, GEAR CASE	1	
11	25311-88L00	CAM, SHIFT	1	
12	08331-3115A	CIRCLIP	1	
13	21121-93300	PLATE, DETENT SPRING	1	
14	09260-10005	BALL	1	
15	09440-07078	SPRING	1	

FIG.206F

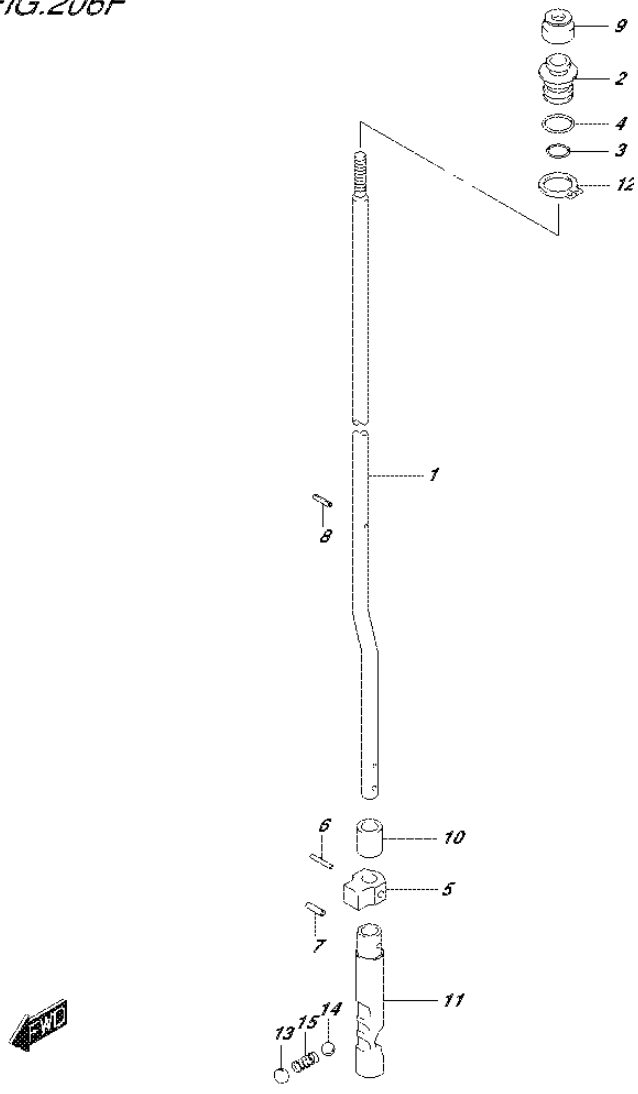

FIG.206F (2-C-9) CLUTCH ROD (DF50ATH E01)

REF NO.	PART NO.	DESCRIPTION	Q'TY	REMARKS
1	25111-88L10	ROD, SHIFT (L)	1	
2	25211-87J00	GUIDE, SHIFT ROD	1	
3	09280-08005	O RING (D:1.7,ID:7.7)	1	
4	09280-11001	O RING (D:2.4,ID:10.8)	1	
5	25212-94401	GUIDE, SHIFT ROD LOWER	1	
6	09205-02013	SPRING PIN (2.5X16)	1	
7	09205-03021	SPRING PIN (3.5X12)	1	
8	09205-02004	SPRING PIN (2.5X12)	1	
9	25223-94400	SEAL, SHIFT ROD DUST	1	
10	25232-96302	MAGNET, GEAR CASE	1	
11	25311-88L00	CAM, SHIFT	1	
12	08331-3115A	CIRCLIP	1	
13	21121-93300	PLATE, DETENT SPRING	1	
14	09260-10005	BALL	1	
15	09440-07078	SPRING	1	

FIG.206G

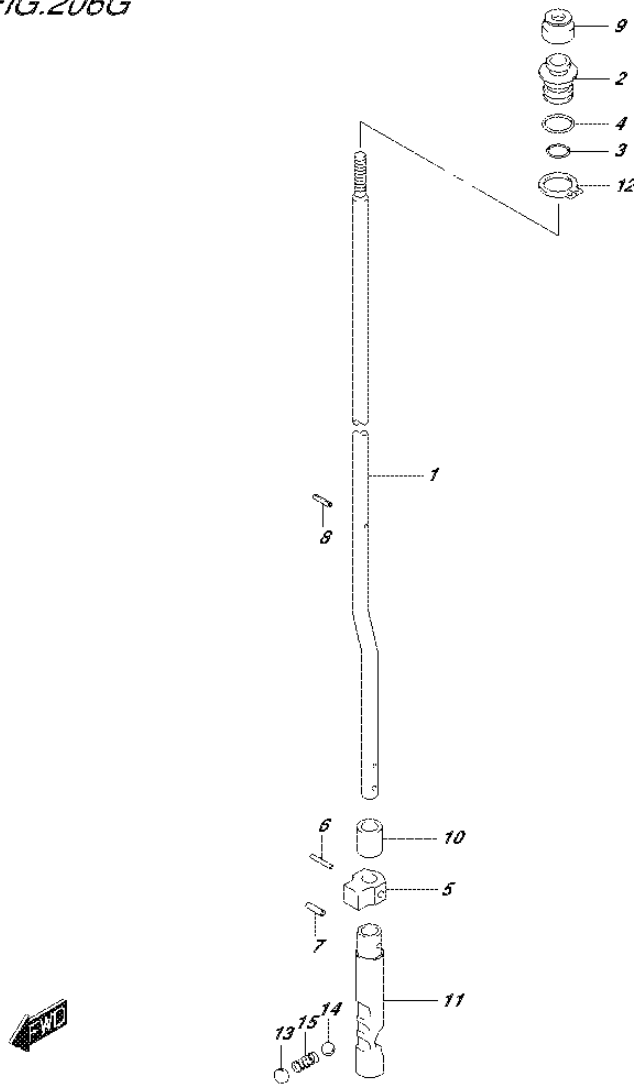

FIG.206G (2-C-10) CLUTCH ROD (DF60A E01)

REF NO.	PART NO.	DESCRIPTION	Q'TY	REMARKS
1-1	25111-88L00	ROD, SHIFT (S)	1	W/TRANSOM(S)
1-2	25111-88L10	ROD, SHIFT (L)	1	W/TRANSOM(L)
1-3	25111-88L20	ROD, SHIFT (X)	1	W/TRANSOM(X)
2	25211-87J00	GUIDE, SHIFT ROD	1	
3	09280-08005	O RING (D:1.7,ID:7.7)	1	
4	09280-11001	O RING (D:2.4,ID:10.8)	1	
5	25212-94401	GUIDE, SHIFT ROD LOWER	1	
6	09205-02013	SPRING PIN (2.5X16)	1	
7	09205-03021	SPRING PIN (3.5X12)	1	
8	09205-02004	SPRING PIN (2.5X12)	1	
9	25223-94400	SEAL, SHIFT ROD DUST	1	
10	25232-96302	MAGNET, GEAR CASE	1	
11	25311-88L00	CAM, SHIFT	1	
12	08331-3115A	CIRCLIP	1	
13	21121-93300	PLATE, DETENT SPRING	1	
14	09260-10005	BALL	1	
15	09440-07078	SPRING	1	

FIG.206H

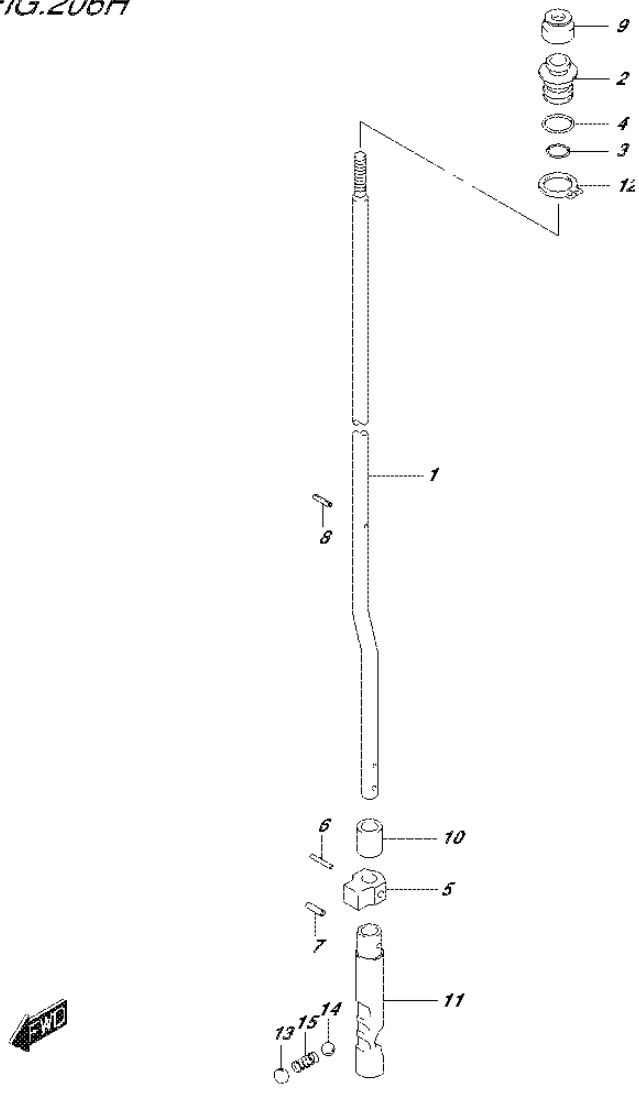

FIG.206H (2-C-11) CLUTCH ROD (DF60A E40)

REF NO.	PART NO.	DESCRIPTION	Q'TY	REMARKS
1-1	25111-88L10	ROD, SHIFT (L)	1	W/TRANSOM(L)
1-2	25111-88L20	ROD, SHIFT (X)	1	W/TRANSOM(X)
2	25211-87J00	GUIDE, SHIFT ROD	1	
3	09280-08005	O RING (D:1.7,ID:7.7)	1	
4	09280-11001	O RING (D:2.4,ID:10.8)	1	
5	25212-94401	GUIDE, SHIFT ROD LOWER	1	
6	09205-02013	SPRING PIN (2.5X16)	1	
7	09205-03021	SPRING PIN (3.5X12)	1	
8	09205-02004	SPRING PIN (2.5X12)	1	
9	25223-94400	SEAL, SHIFT ROD DUST	1	
10	25232-96302	MAGNET, GEAR CASE	1	
11	25311-88L00	CAM, SHIFT	1	
12	08331-3115A	CIRCLIP	1	
13	21121-93300	PLATE, DETENT SPRING	1	
14	09260-10005	BALL	1	
15	09440-07078	SPRING	1	

FIG.206J

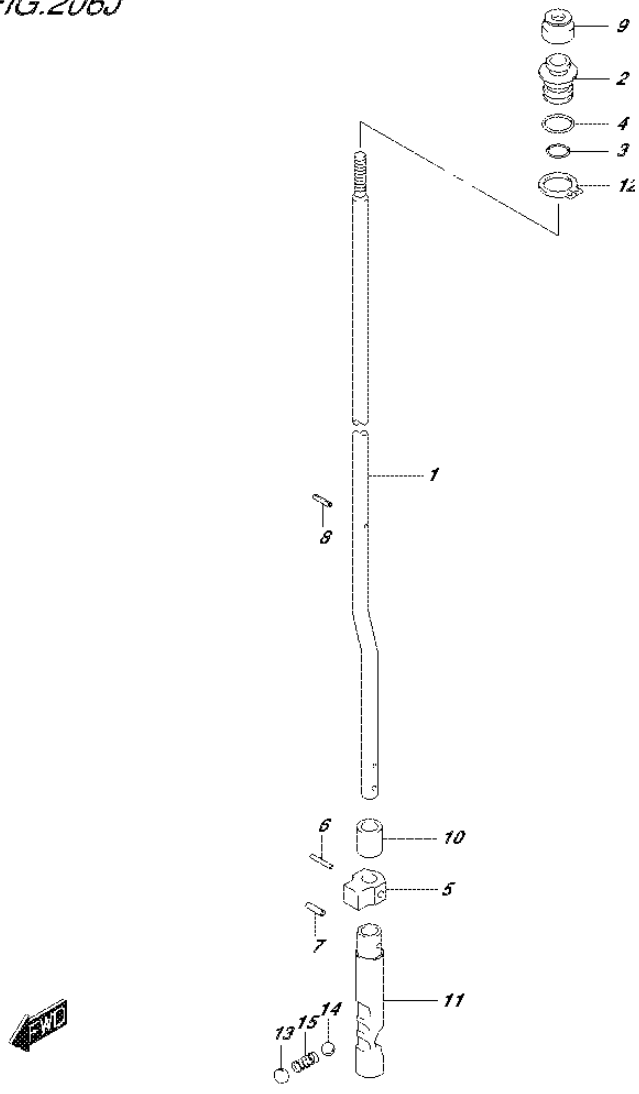

FIG.206J (2-C-12) CLUTCH ROD (DF60AQH E01)

REF NO.	PART NO.	DESCRIPTION	Q'TY	REMARKS
1-1	25111-88L10	ROD, SHIFT (L)	1	W/TRANSOM(L)
1-2	25111-88L20	ROD, SHIFT (X)	1	W/TRANSOM(X)
2	25211-87J00	GUIDE, SHIFT ROD	1	
3	09280-08005	O RING (D:1.7,ID:7.7)	1	
4	09280-11001	O RING (D:2.4,ID:10.8)	1	
5	25212-94401	GUIDE, SHIFT ROD LOWER	1	
6	09205-02013	SPRING PIN (2.5X16)	1	
7	09205-03021	SPRING PIN (3.5X12)	1	
8	09205-02004	SPRING PIN (2.5X12)	1	
9	25223-94400	SEAL, SHIFT ROD DUST	1	
10	25232-96302	MAGNET, GEAR CASE	1	
11	25311-88L00	CAM, SHIFT	1	
12	08331-3115A	CIRCLIP	1	
13	21121-93300	PLATE, DETENT SPRING	1	
14	09260-10005	BALL	1	
15	09440-07078	SPRING	1	

FIG.206K

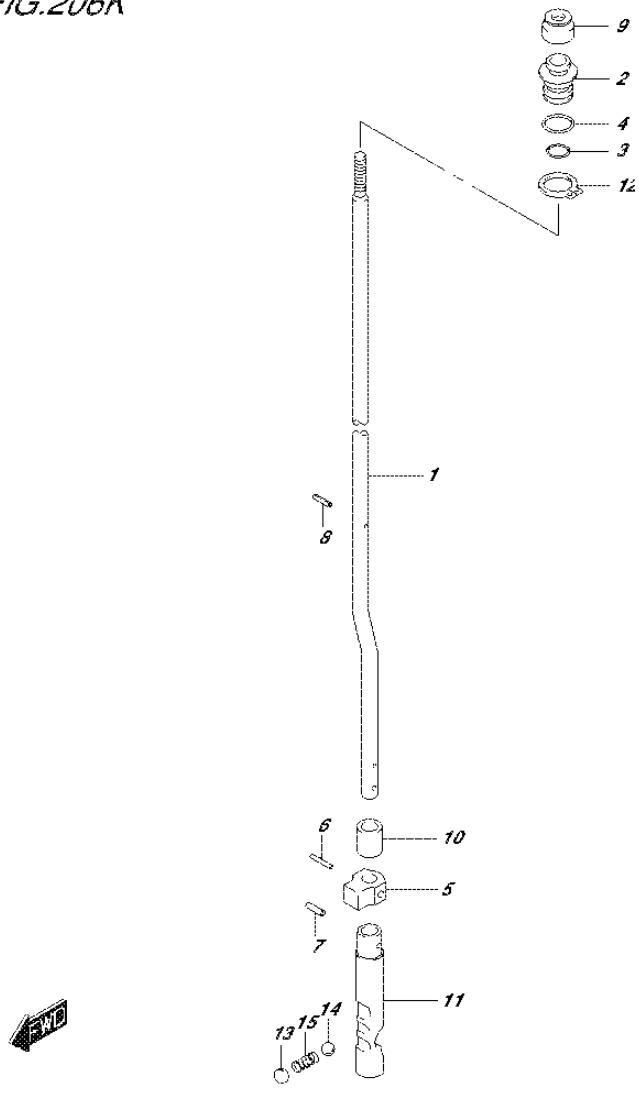

FIG.206K (2-C-13) CLUTCH ROD (DF60AQH E40)

REF NO.	PART NO.	DESCRIPTION	Q'TY	REMARKS
1-1	25111-88L10	ROD, SHIFT (L)	1	W/TRANSOM(L)
1-2	25111-88L20	ROD, SHIFT (X)	1	W/TRANSOM(X)
2	25211-87J00	GUIDE, SHIFT ROD	1	
3	09280-08005	O RING (D:1.7,ID:7.7)	1	
4	09280-11001	O RING (D:2.4,ID:10.8)	1	
5	25212-94401	GUIDE, SHIFT ROD LOWER	1	
6	09205-02013	SPRING PIN (2.5X16)	1	
7	09205-03021	SPRING PIN (3.5X12)	1	
8	09205-02004	SPRING PIN (2.5X12)	1	
9	25223-94400	SEAL, SHIFT ROD DUST	1	
10	25232-96302	MAGNET, GEAR CASE	1	
11	25311-88L00	CAM, SHIFT	1	
12	08331-3115A	CIRCLIP	1	
13	21121-93300	PLATE, DETENT SPRING	1	
14	09260-10005	BALL	1	
15	09440-07078	SPRING	1	

FIG.206L

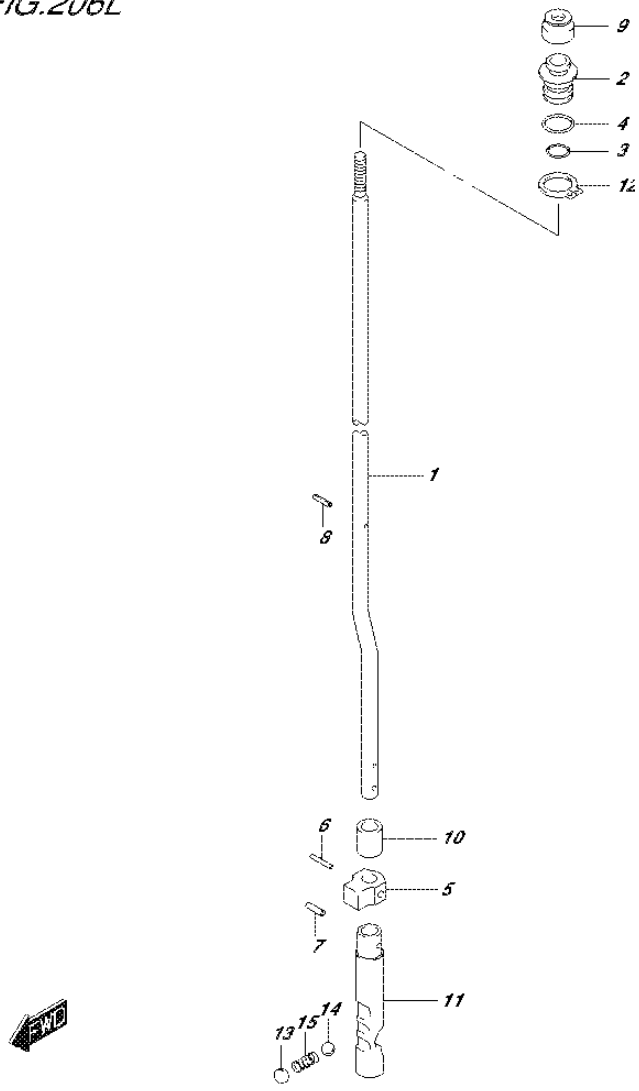

FIG.206L (2-C-14) CLUTCH ROD (DF60ATH E01)

REF NO.	PART NO.	DESCRIPTION	Q'TY	REMARKS
1-1	25111-88L10	ROD, SHIFT (L)	1	W/TRANSOM(L)
1-2	25111-88L20	ROD, SHIFT (X)	1	W/TRANSOM(X)
2	25211-87J00	GUIDE, SHIFT ROD	1	
3	09280-08005	O RING (D:1.7,ID:7.7)	1	
4	09280-11001	O RING (D:2.4,ID:10.8)	1	
5	25212-94401	GUIDE, SHIFT ROD LOWER	1	
6	09205-02013	SPRING PIN (2.5X16)	1	
7	09205-03021	SPRING PIN (3.5X12)	1	
8	09205-02004	SPRING PIN (2.5X12)	1	
9	25223-94400	SEAL, SHIFT ROD DUST	1	
10	25232-96302	MAGNET, GEAR CASE	1	
11	25311-88L00	CAM, SHIFT	1	
12	08331-3115A	CIRCLIP	1	
13	21121-93300	PLATE, DETENT SPRING	1	
14	09260-10005	BALL	1	
15	09440-07078	SPRING	1	

FIG.206M

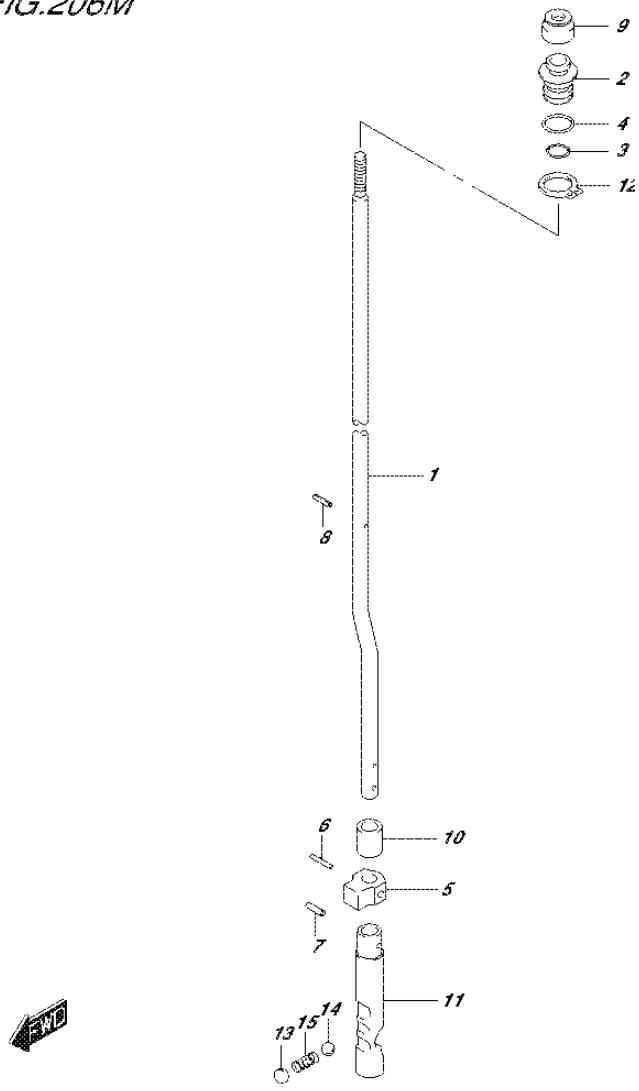

FIG.206M (2-C-15) CLUTCH ROD (DF60ATH E40)

REF NO.	PART NO.	DESCRIPTION	Q'TY	REMARKS
1-1	25111-88L10	ROD, SHIFT (L)	1	W/TRANSOM(L)
1-2	25111-88L20	ROD, SHIFT (X)	1	W/TRANSOM(X)
2	25211-87J00	GUIDE, SHIFT ROD	1	
3	09280-08005	O RING (D:1.7,ID:7.7)	1	
4	09280-11001	O RING (D:2.4,ID:10.8)	1	
5	25212-94401	GUIDE, SHIFT ROD LOWER	1	
6	09205-02013	SPRING PIN (2.5X16)	1	
7	09205-03021	SPRING PIN (3.5X12)	1	
8	09205-02004	SPRING PIN (2.5X12)	1	
9	25223-94400	SEAL, SHIFT ROD DUST	1	
10	25232-96302	MAGNET, GEAR CASE	1	
11	25311-88L00	CAM, SHIFT	1	
12	08331-3115A	CIRCLIP	1	
13	21121-93300	PLATE, DETENT SPRING	1	
14	09260-10005	BALL	1	
15	09440-07078	SPRING	1	

FIG.210A

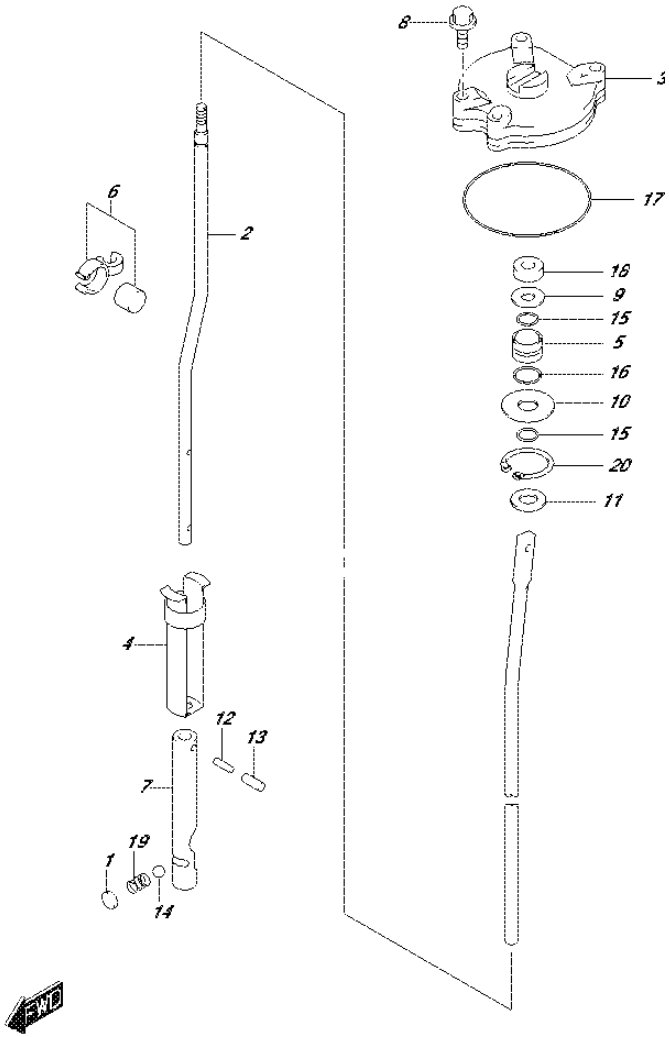

FIG.210A (2-D-2) SHIFT ROD (DF50AVT E01)

REF NO.	PART NO.	DESCRIPTION	Q'TY	REMARKS
1	21121-93300	PLATE, CLUTCH NOTCH	1	
2	25111-88L30	ROD, SHIFT (L)	1	
3	25141-99E03	HOUSING, SHIFT ROD GUIDE	1	
4	25205-94501	COLLAR, SHIFT ROD SPRING	1	
5	25211-94501	GUIDE, SHIFT ROD	1	
6	25230-94300	MAGNET SET	1	
7	25311-94510	CAM, CLUTCH	1	
8	09117-06031	BOLT (6X20)	3	
9	09160-09015	WASHER (9X19X1.0)	1	
10	09160-09010	WASHER (9X30X1.6)	1	
11	09160-08122	WASHER (8.5X18X3.20)	1	
12	09205-02006	SPRING PIN (2X12)	2	
13	09205-03021	SPRING PIN (3.5X12)	2	
14	09260-10005	BALL	1	
15	09280-08008	O RING (D:3.5,ID:7.8)	2	
16	09280-15003	O RING (D:2.4,ID:14.8)	1	
17	09280-69001	O RING (D:3.1,ID:68.5)	1	
18	09284-08003	OIL SEAL (8X19X4.5)	1	
19	09440-07033	SPRING	1	
20	08331-41309	CIRCLIP	1	

FIG.210B

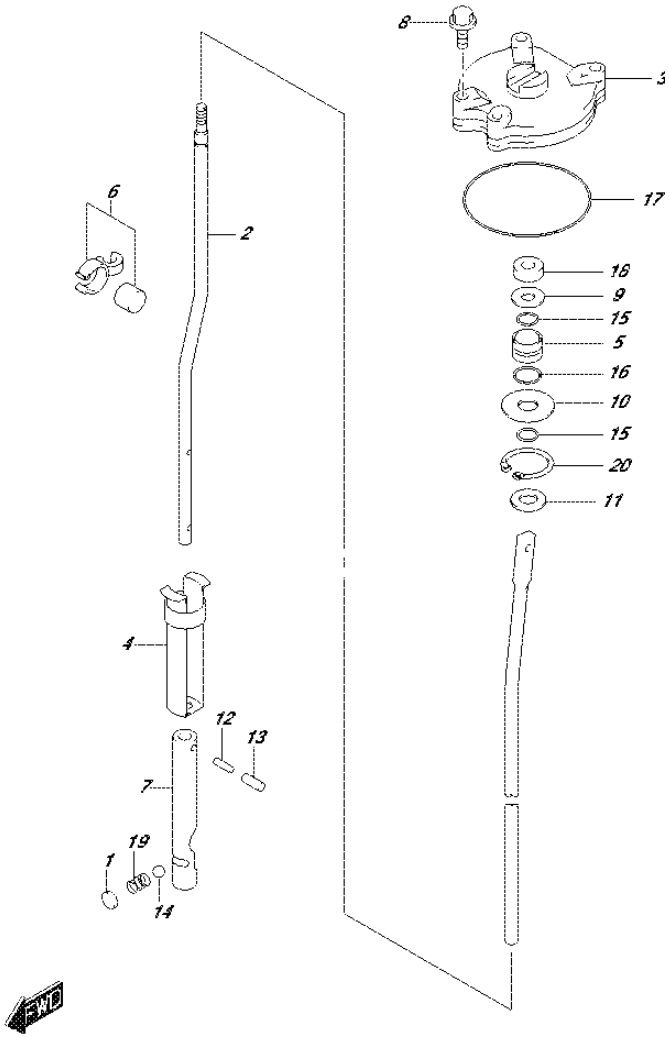

FIG.210B (2-D-3) SHIFT ROD (DF50AVTH E01)

REF NO.	PART NO.	DESCRIPTION	Q'TY	REMARKS
1	21121-93300	PLATE, CLUTCH NOTCH	1	
2	25111-88L30	ROD, SHIFT (L)	1	
3	25141-99E03	HOUSING, SHIFT ROD GUIDE	1	
4	25205-94501	COLLAR, SHIFT ROD SPRING	1	
5	25211-94501	GUIDE, SHIFT ROD	1	
6	25230-94300	MAGNET SET	1	
7	25311-94510	CAM, CLUTCH	1	
8	09117-06031	BOLT (6X20)	3	
9	09160-09015	WASHER (9X19X1.0)	1	
10	09160-09010	WASHER (9X30X1.6)	1	
11	09160-08122	WASHER (8.5X18X3.20)	1	
12	09205-02006	SPRING PIN (2X12)	2	
13	09205-03021	SPRING PIN (3.5X12)	2	
14	09260-10005	BALL	1	
15	09280-08008	O RING (D:3.5,ID:7.8)	2	
16	09280-15003	O RING (D:2.4,ID:14.8)	1	
17	09280-69001	O RING (D:3.1,ID:68.5)	1	
18	09284-08003	OIL SEAL (8X19X4.5)	1	
19	09440-07033	SPRING	1	
20	08331-41309	CIRCLIP	1	

FIG.210C

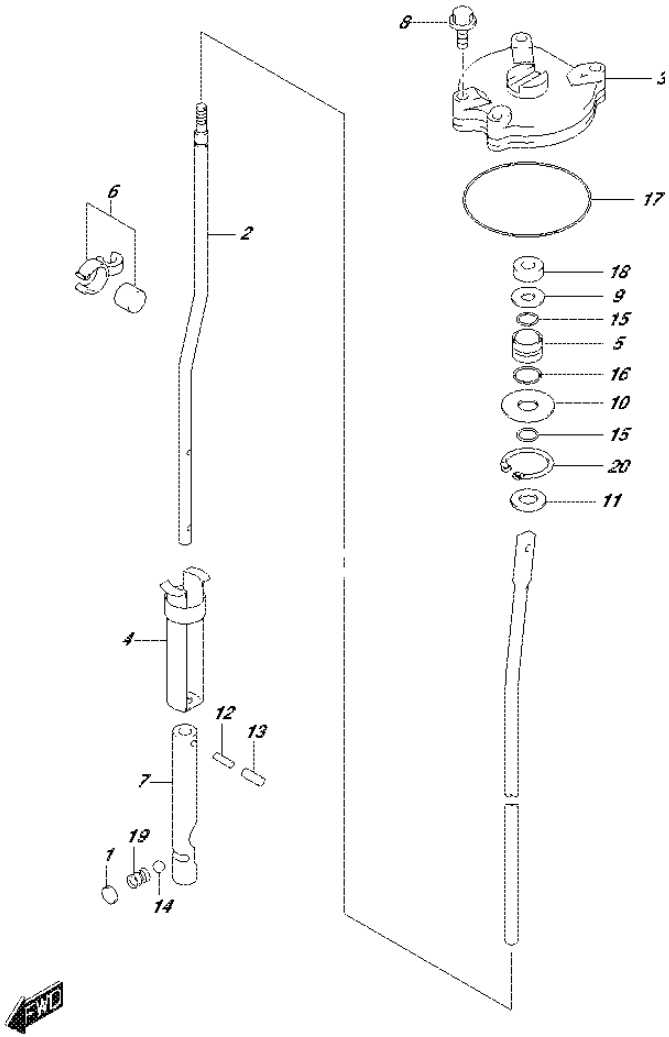

FIG.210C (2-D-4) SHIFT ROD (DF60AVT E01)

REF NO.	PART NO.	DESCRIPTION	Q'TY	REMARKS
1	21121-93300	PLATE, CLUTCH NOTCH	1	
2-1	25111-88L30	ROD, SHIFT (L)	1	W/TRANSOM(L)
2-2	25111-88L40	ROD, SHIFT (X)	1	W/TRANSOM(X)
3	25141-99E03	HOUSING, SHIFT ROD GUIDE	1	
4	25205-94501	COLLAR, SHIFT ROD SPRING	1	
5	25211-94501	GUIDE, SHIFT ROD	1	
6	25230-94300	MAGNET SET	1	
7	25311-94510	CAM, CLUTCH	1	
8	09117-06031	BOLT (6X20)	3	
9	09160-09015	WASHER (9X19X1.0)	1	
10	09160-09010	WASHER (9X30X1.6)	1	
11	09160-08122	WASHER (8.5X18X3.20)	1	
12	09205-02006	SPRING PIN (2X12)	2	
13	09205-03021	SPRING PIN (3.5X12)	2	
14	09260-10005	BALL	1	
15	09280-08008	O RING (D:3.5,ID:7.8)	2	
16	09280-15003	O RING (D:2.4,ID:14.8)	1	
17	09280-69001	O RING (D:3.1,ID:68.5)	1	
18	09284-08003	OIL SEAL (8X19X4.5)	1	
19	09440-07033	SPRING	1	
20	08331-41309	CIRCLIP	1	

FIG.210D

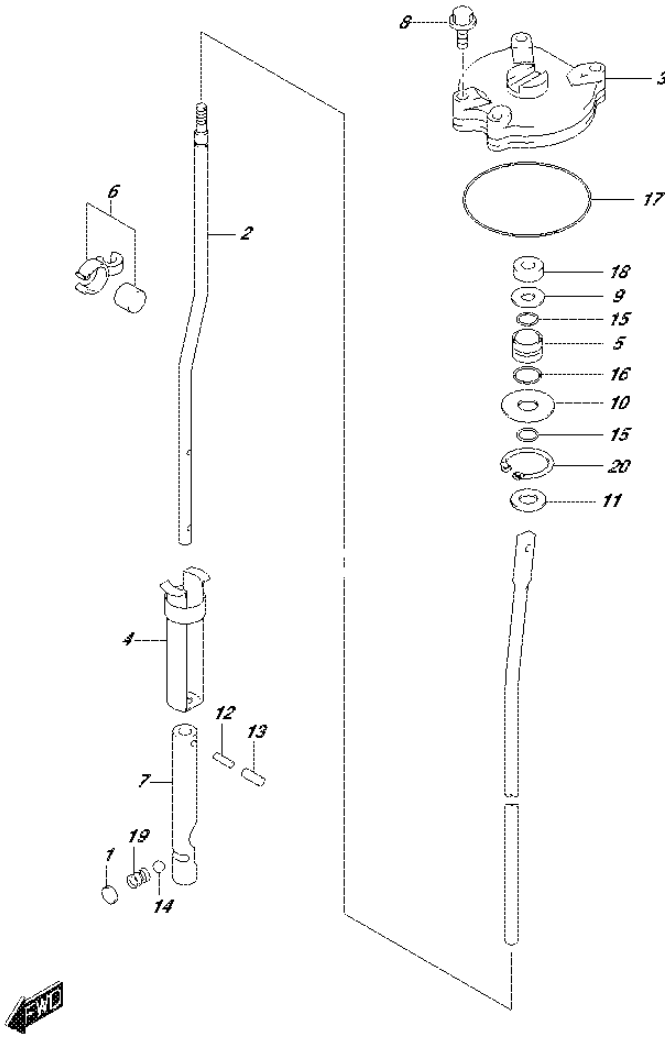

FIG.210D (2-D-5) SHIFT ROD (DF60AVT E40)

REF NO.	PART NO.	DESCRIPTION	Q'TY	REMARKS
1	21121-93300	PLATE, CLUTCH NOTCH	1	
2-1	25111-88L30	ROD, SHIFT (L)	1	W/TRANSOM(L)
2-2	25111-88L40	ROD, SHIFT (X)	1	W/TRANSOM(X)
3	25141-99E03	HOUSING, SHIFT ROD GUIDE	1	
4	25205-94501	COLLAR, SHIFT ROD SPRING	1	
5	25211-94501	GUIDE, SHIFT ROD	1	
6	25230-94300	MAGNET SET	1	
7	25311-94510	CAM, CLUTCH	1	
8	09117-06031	BOLT (6X20)	3	
9	09160-09015	WASHER (9X19X1.0)	1	
10	09160-09010	WASHER (9X30X1.6)	1	
11	09160-08122	WASHER (8.5X18X3.20)	1	
12	09205-02006	SPRING PIN (2X12)	2	
13	09205-03021	SPRING PIN (3.5X12)	2	
14	09260-10005	BALL	1	
15	09280-08008	O RING (D:3.5,ID:7.8)	2	
16	09280-15003	O RING (D:2.4,ID:14.8)	1	
17	09280-69001	O RING (D:3.1,ID:68.5)	1	
18	09284-08003	OIL SEAL (8X19X4.5)	1	
19	09440-07033	SPRING	1	
20	08331-41309	CIRCLIP	1	

FIG.210E

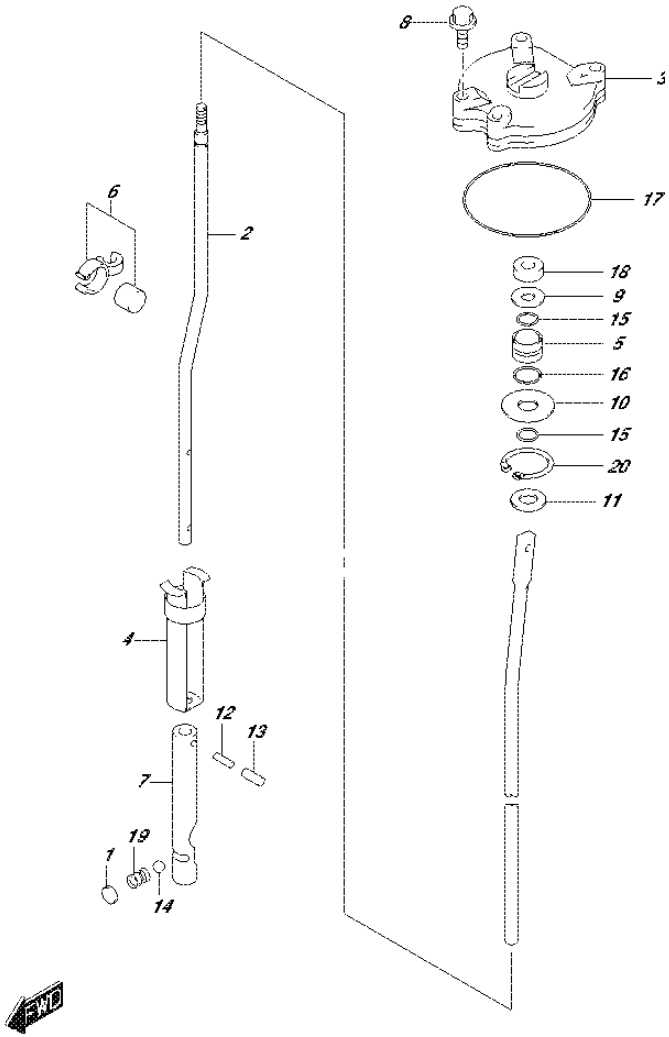

FIG.210E (2-D-6) SHIFT ROD (DF60AVTH E01)

REF NO.	PART NO.	DESCRIPTION	Q'TY	REMARKS
1	21121-93300	PLATE, CLUTCH NOTCH	1	
2-1	25111-88L30	ROD, SHIFT (L)	1	W/TRANSOM(L)
2-2	25111-88L40	ROD, SHIFT (X)	1	W/TRANSOM(X)
3	25141-99E03	HOUSING, SHIFT ROD GUIDE	1	
4	25205-94501	COLLAR, SHIFT ROD SPRING	1	
5	25211-94501	GUIDE, SHIFT ROD	1	
6	25230-94300	MAGNET SET	1	
7	25311-94510	CAM, CLUTCH	1	
8	09117-06031	BOLT (6X20)	3	
9	09160-09015	WASHER (9X19X1.0)	1	
10	09160-09010	WASHER (9X30X1.6)	1	
11	09160-08122	WASHER (8.5X18X3.20)	1	
12	09205-02006	SPRING PIN (2X12)	2	
13	09205-03021	SPRING PIN (3.5X12)	2	
14	09260-10005	BALL	1	
15	09280-08008	O RING (D:3.5,ID:7.8)	2	
16	09280-15003	O RING (D:2.4,ID:14.8)	1	
17	09280-69001	O RING (D:3.1,ID:68.5)	1	
18	09284-08003	OIL SEAL (8X19X4.5)	1	
19	09440-07033	SPRING	1	
20	08331-41309	CIRCLIP	1	

FIG.210F

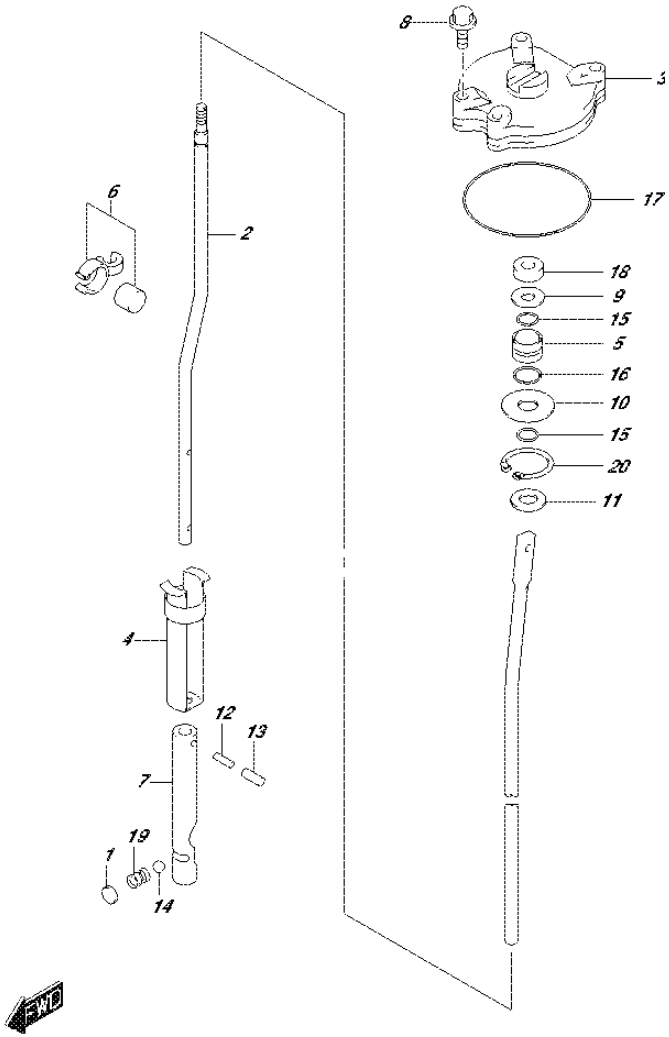

FIG.210F (2-D-7) SHIFT ROD (DF60AVTH E40)

REF NO.	PART NO.	DESCRIPTION	Q'TY	REMARKS
1	21121-93300	PLATE, CLUTCH NOTCH	1	
2-1	25111-88L30	ROD, SHIFT (L)	1	W/TRANSOM(L)
2-2	25111-88L40	ROD, SHIFT (X)	1	W/TRANSOM(X)
3	25141-99E03	HOUSING, SHIFT ROD GUIDE	1	
4	25205-94501	COLLAR, SHIFT ROD SPRING	1	
5	25211-94501	GUIDE, SHIFT ROD	1	
6	25230-94300	MAGNET SET	1	
7	25311-94510	CAM, CLUTCH	1	
8	09117-06031	BOLT (6X20)	3	
9	09160-09015	WASHER (9X19X1.0)	1	
10	09160-09010	WASHER (9X30X1.6)	1	
11	09160-08122	WASHER (8.5X18X3.20)	1	
12	09205-02006	SPRING PIN (2X12)	2	
13	09205-03021	SPRING PIN (3.5X12)	2	
14	09260-10005	BALL	1	
15	09280-08008	O RING (D:3.5,ID:7.8)	2	
16	09280-15003	O RING (D:2.4,ID:14.8)	1	
17	09280-69001	O RING (D:3.1,ID:68.5)	1	
18	09284-08003	OIL SEAL (8X19X4.5)	1	
19	09440-07033	SPRING	1	
20	08331-41309	CIRCLIP	1	

FIG.220A

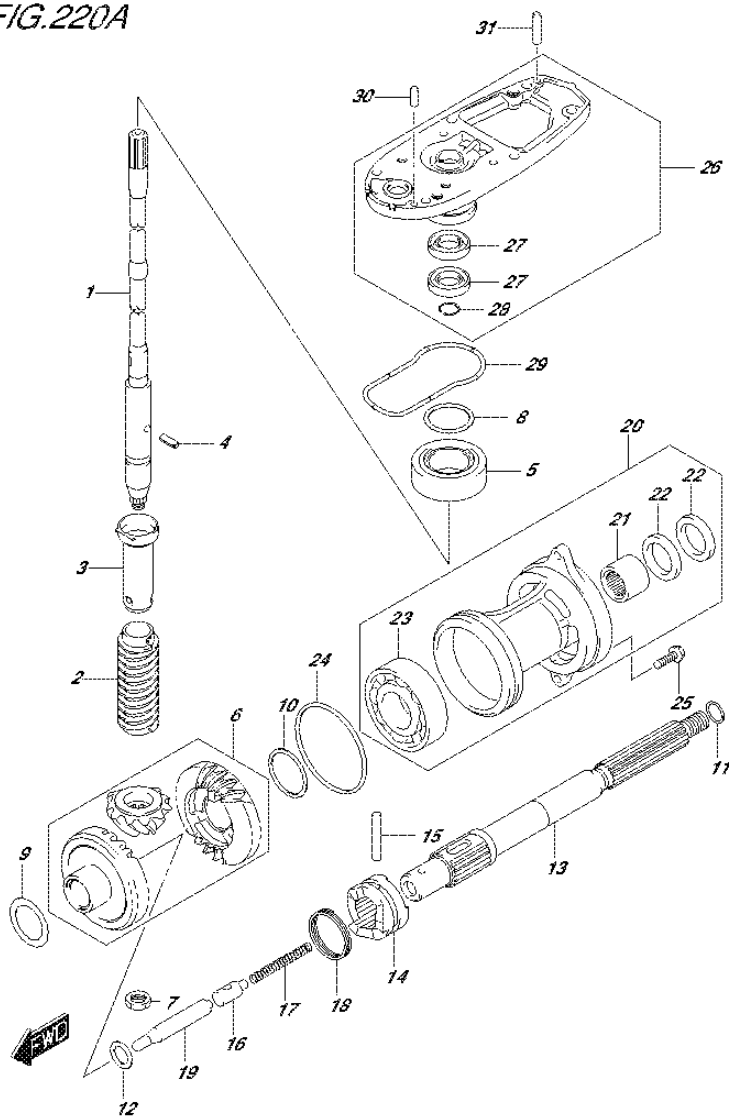

FIG.220A (2-D-8) TRANSMISSION (DF40A E01)

REF NO.	PART NO.	DESCRIPTION	Q'TY	REMARKS
1-1	57110-88L02	SHAFT ASSY, DRIVE (S)	1	W/TRANSOM(S)
1-2	57110-88L12	SHAFT ASSY, DRIVE (L)	1	W/TRANSOM(L)
2	57133-88L01	COLLAR, DRIVE SHAFT	1	
3	57133-94400	HOUSING, DRIVE SHAFT SPRING	1	
4	09205-03019	SPRING PIN (3X10)	1	
5	09265-20015	BEARING (20X42X15)	1	
6	57300-88810	PINION/GEAR SET	1	
7	09140-12034	NUT	1	
8-1	09181-35101	SHIM (T:0.50)	AR	DRIVE SHAFT ADJUST
8-2	09181-33001	SHIM (T:0.55)	AR	
8-3	09181-33002	SHIM (T:0.60)	AR	
8-4	09181-33003	SHIM (T:0.65)	AR	
8-5	09181-33004	SHIM (T:0.70)	AR	
8-6	09181-33005	SHIM (T:0.75)	AR	
8-7	09181-33006	SHIM (T:0.80)	AR	
8-8	09181-33007	SHIM (T:0.85)	AR	
8-9	09181-33008	SHIM (T:0.90)	AR	
8-10	09181-33009	SHIM (T:0.95)	AR	
8-11	09181-35110	SHIM (T:1.00)	AR	
9-1	09181-30186	SHIM (T:0.50)	AR	FORWARD BACKUP
9-2	09181-30187	SHIM (T:0.60)	AR	
9-3	09181-30188	SHIM (T:0.70)	AR	
9-4	09181-30190	SHIM (T:0.80)	AR	
9-5	09181-30192	SHIM (T:0.90)	AR	
10-1	08221-35455	SHIM	AR	REVERSE BACKUP
10-2	09181-35131	SHIM (T:0.60)	AR	
10-3	09181-35132	SHIM (T:0.70)	AR	
10-4	08221-35456	SHIM	AR	
10-5	09181-35136	SHIM (T:0.90)	AR	
10-6	08211-35451	WASHER	AR	
11-1	09160-22018	WASHER (22.2X28X1.8)	1	PROP SHAFT THRUST
11-2	09160-22019	WASHER (22.5X28X1.9)	1	
11-3	09160-22020	WASHER (22.5X28X2)	1	
11-4	09160-22021	WASHER (22.5X28X2.1)	1	
11-5	09160-22022	WASHER (22.5X28X2.2)	1	
11-6	09160-22023	WASHER (22.5X28X2.3)	1	

FIG.220A

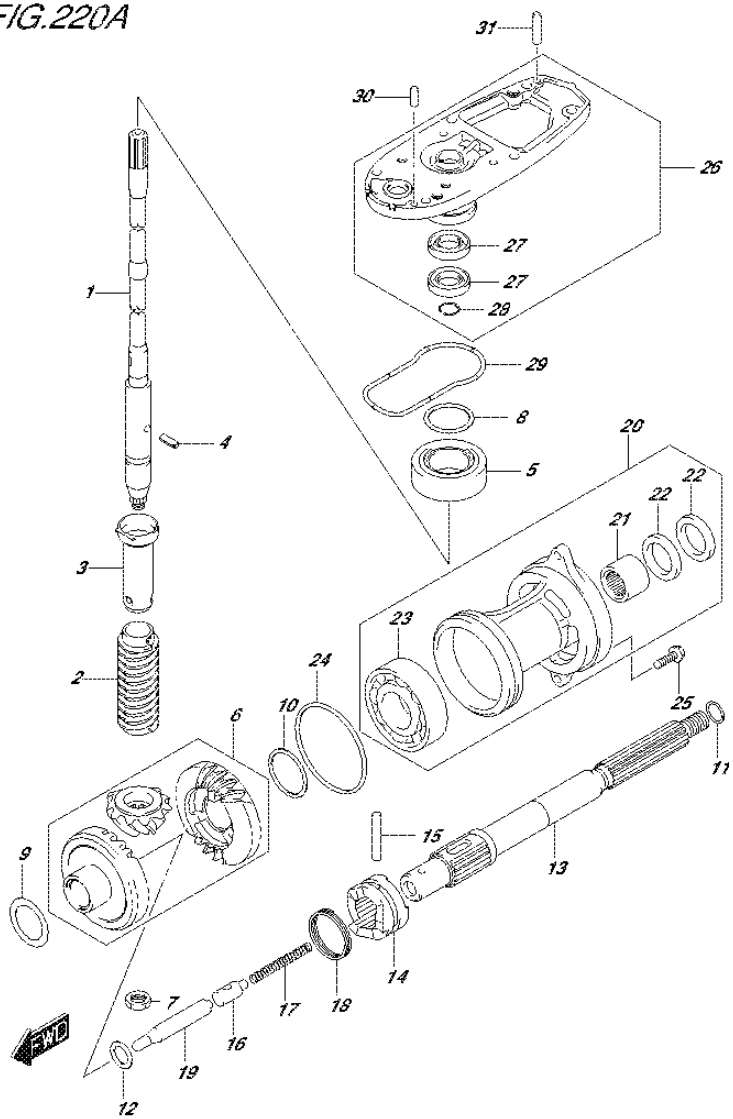

FIG.220A (2-D-9) TRANSMISSION (DF40A E01)

REF NO.	PART NO.	DESCRIPTION	Q'TY	REMARKS
12	08211-20263	WASHER	1	
13	57610-94402	SHAFT, PROPELLER	1	
14	57621-87J02	SHIFTER, CLUTCH DOG	1	
15	09202-05022	PIN (5.5X38.5)	1	
16	57634-88L00	PIN, PUSH	1	
17	09440-08043	SPRING	1	
18	09440-40002	SPRING	1	
19	57631-95303	ROD, PUSH	1	
20-1	56120-94321-0EP	HOUSING, PROP SHAFT BEARING (BLACK)	1	
20-2	56120-94321-Y5S	HOUSING, PROP SHAFT BEARING (WHITE)	1	
21	09263-22020	.BEARING (22.2X28.5X19)	1	
22	09289-22007	.OIL SEAL (22X35X5)	2	
23	09262-35070	.BEARING (35X62X14)	1	
24	09280-75001	O RING (D:3.3,ID:75)	1	
25	09116-08122	BOLT (8X30)	2	
26-1	56130-87J11-0EP	HOUSING, DRIVE SHAFT BEARING (BLACK)	1	
26-2	56130-87J11-Y5S	HOUSING, DRIVE SHAFT BEARING (WHITE)	1	
27	09282-17005	.OIL SEAL (17X32X6)	2	
28	08331-41329	.CIRCLIP	1	
29	55122-88L00	RING, GEAR CASE SEAL	1	
30	09202-06025	PIN (6X17)	1	
31	09202-06027	PIN (6X23)	1	

FIG.220B

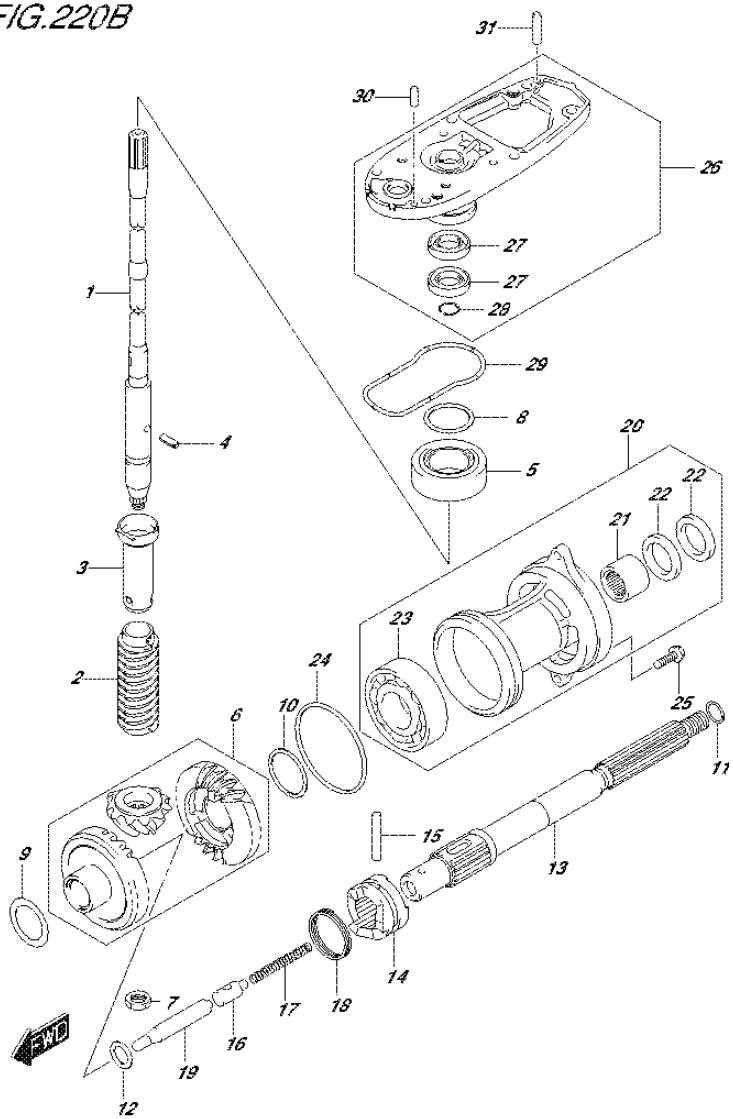

FIG.220B (2-D-10) TRANSMISSION (DF40AQH E01)

REF NO.	PART NO.	DESCRIPTION	Q'TY	REMARKS
1	57110-88L12	SHAFT ASSY, DRIVE (L)	1	
2	57133-88L01	COLLAR, DRIVE SHAFT	1	
3	57133-94400	HOUSING, DRIVE SHAFT SPRING	1	
4	09205-03019	SPRING PIN (3X10)	1	
5	09265-20015	BEARING (20X42X15)	1	
6	57300-88810	PINION/GEAR SET	1	
7	09140-12034	NUT	1	
8-1	09181-35101	SHIM (T:0.50)	AR	DRIVE SHAFT ADJUST
8-2	09181-33001	SHIM (T:0.55)	AR	
8-3	09181-33002	SHIM (T:0.60)	AR	
8-4	09181-33003	SHIM (T:0.65)	AR	
8-5	09181-33004	SHIM (T:0.70)	AR	
8-6	09181-33005	SHIM (T:0.75)	AR	
8-7	09181-33006	SHIM (T:0.80)	AR	
8-8	09181-33007	SHIM (T:0.85)	AR	
8-9	09181-33008	SHIM (T:0.90)	AR	
8-10	09181-33009	SHIM (T:0.95)	AR	
8-11	09181-35110	SHIM (T:1.00)	AR	
9-1	09181-30186	SHIM (T:0.50)	AR	FORWARD BACKUP
9-2	09181-30187	SHIM (T:0.60)	AR	
9-3	09181-30188	SHIM (T:0.70)	AR	
9-4	09181-30190	SHIM (T:0.80)	AR	
9-5	09181-30192	SHIM (T:0.90)	AR	
10-1	08221-35455	SHIM	AR	REVERSE BACKUP
10-2	09181-35131	SHIM (T:0.60)	AR	
10-3	09181-35132	SHIM (T:0.70)	AR	
10-4	08221-35456	SHIM	AR	
10-5	09181-35136	SHIM (T:0.90)	AR	
10-6	08211-35451	WASHER	AR	
11-1	09160-22018	WASHER (22.2X28X1.8)	1	PROP SHAFT THRUST
11-2	09160-22019	WASHER (22.5X28X1.9)	1	
11-3	09160-22020	WASHER (22.5X28X2)	1	
11-4	09160-22021	WASHER (22.5X28X2.1)	1	
11-5	09160-22022	WASHER (22.5X28X2.2)	1	
11-6	09160-22023	WASHER (22.5X28X2.3)	1	

FIG.220B

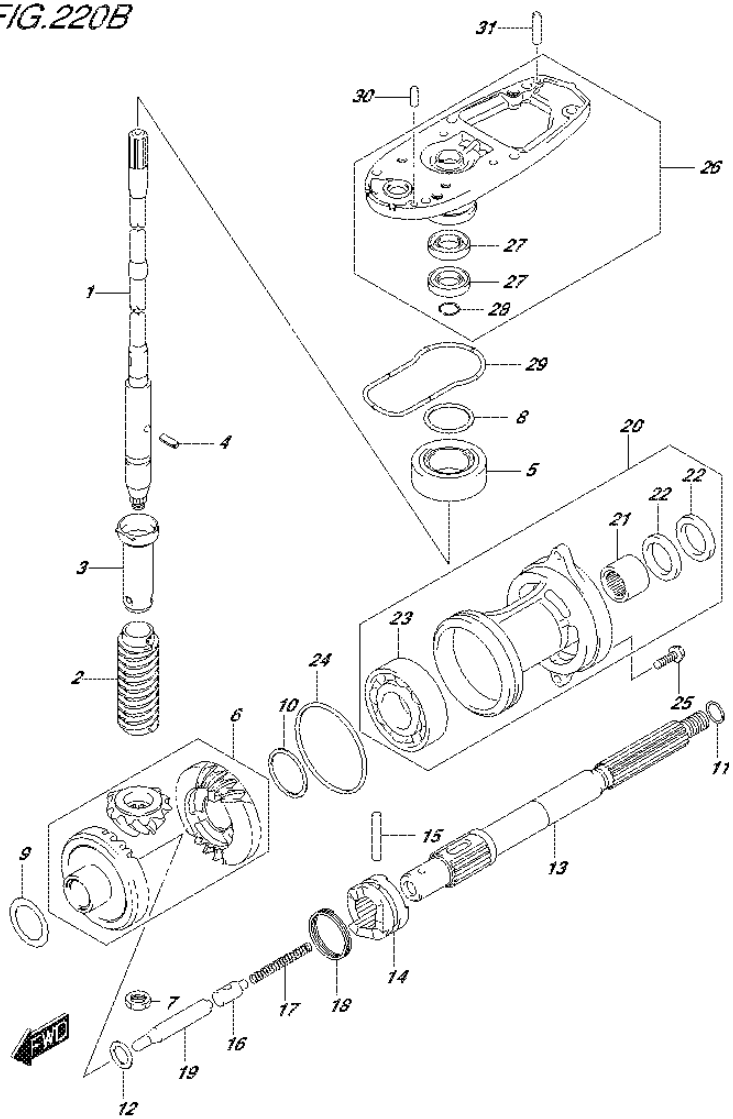

FIG.220B (2-D-11) TRANSMISSION (DF40AQH E01)

REF NO.	PART NO.	DESCRIPTION	Q'TY	REMARKS
12	08211-20263	WASHER	1	
13	57610-94402	SHAFT, PROPELLER	1	
14	57621-87J02	SHIFTER, CLUTCH DOG	1	
15	09202-05022	PIN (5.5X38.5)	1	
16	57634-88L00	PIN, PUSH	1	
17	09440-08043	SPRING	1	
18	09440-40002	SPRING	1	
19	57631-95303	ROD, PUSH	1	
20	56120-94321-0EP	HOUSING, PROP SHAFT BEARING (BLACK)	1	
21	09263-22020	.BEARING (22.2X28.5X19)	1	
22	09289-22007	.OIL SEAL (22X35X5)	2	
23	09262-35070	.BEARING (35X62X14)	1	
24	09280-75001	O RING (D:3.3,ID:75)	1	
25	09116-08122	BOLT (8X30)	2	
26	56130-87J11-0EP	HOUSING, DRIVE SHAFT BEARING (BLACK)	1	
27	09282-17005	.OIL SEAL (17X32X6)	2	
28	08331-41329	.CIRCLIP	1	
29	55122-88L00	RING, GEAR CASE SEAL	1	
30	09202-06025	PIN (6X17)	1	
31	09202-06027	PIN (6X23)	1	

FIG.220C

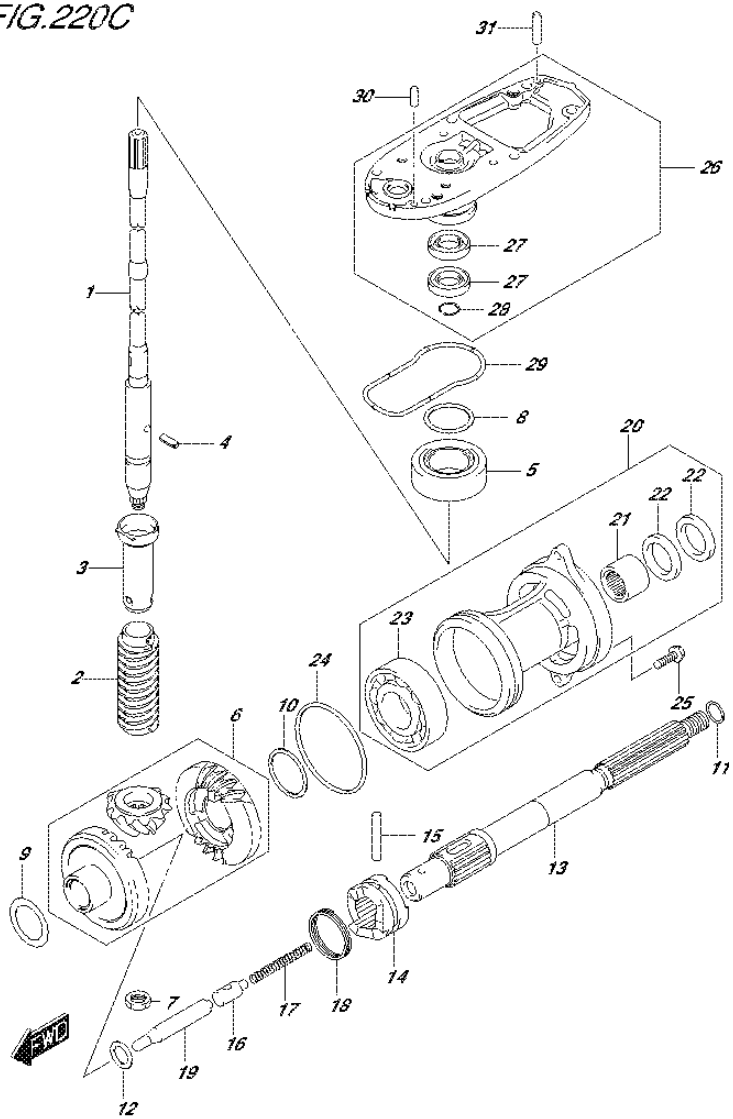

FIG.220C (2-D-12) TRANSMISSION (DF40ATH E01)

REF NO.	PART NO.	DESCRIPTION	Q'TY	REMARKS
1	57110-88L12	SHAFT ASSY, DRIVE (L)	1	
2	57133-88L01	COLLAR, DRIVE SHAFT	1	
3	57133-94400	HOUSING, DRIVE SHAFT SPRING	1	
4	09205-03019	SPRING PIN (3X10)	1	
5	09265-20015	BEARING (20X42X15)	1	
6	57300-88810	PINION/GEAR SET	1	
7	09140-12034	NUT	1	
8-1	09181-35101	SHIM (T:0.50)	AR	DRIVE SHAFT ADJUST
8-2	09181-33001	SHIM (T:0.55)	AR	
8-3	09181-33002	SHIM (T:0.60)	AR	
8-4	09181-33003	SHIM (T:0.65)	AR	
8-5	09181-33004	SHIM (T:0.70)	AR	
8-6	09181-33005	SHIM (T:0.75)	AR	
8-7	09181-33006	SHIM (T:0.80)	AR	
8-8	09181-33007	SHIM (T:0.85)	AR	
8-9	09181-33008	SHIM (T:0.90)	AR	
8-10	09181-33009	SHIM (T:0.95)	AR	
8-11	09181-35110	SHIM (T:1.00)	AR	
9-1	09181-30186	SHIM (T:0.50)	AR	FORWARD BACKUP
9-2	09181-30187	SHIM (T:0.60)	AR	
9-3	09181-30188	SHIM (T:0.70)	AR	
9-4	09181-30190	SHIM (T:0.80)	AR	
9-5	09181-30192	SHIM (T:0.90)	AR	
10-1	08221-35455	SHIM	AR	REVERSE BACKUP
10-2	09181-35131	SHIM (T:0.60)	AR	
10-3	09181-35132	SHIM (T:0.70)	AR	
10-4	08221-35456	SHIM	AR	
10-5	09181-35136	SHIM (T:0.90)	AR	
10-6	08211-35451	WASHER	AR	
11-1	09160-22018	WASHER (22.2X28X1.8)	1	PROP SHAFT THRUST
11-2	09160-22019	WASHER (22.5X28X1.9)	1	
11-3	09160-22020	WASHER (22.5X28X2)	1	
11-4	09160-22021	WASHER (22.5X28X2.1)	1	
11-5	09160-22022	WASHER (22.5X28X2.2)	1	
11-6	09160-22023	WASHER (22.5X28X2.3)	1	

FIG.220C

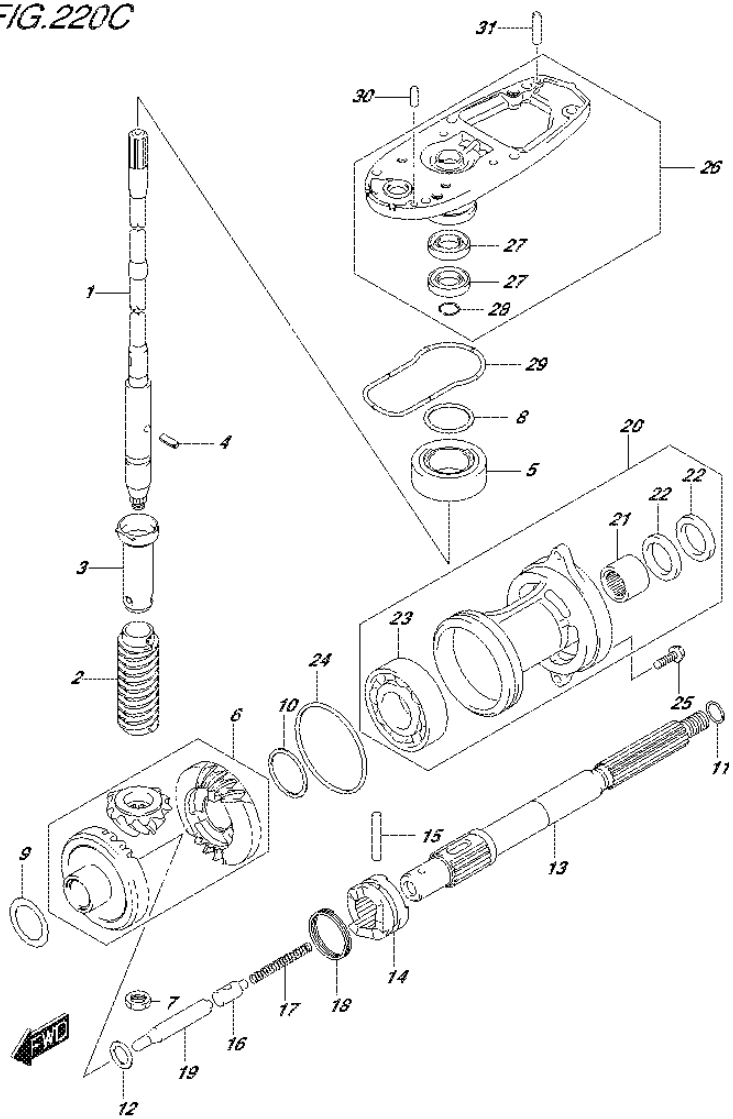

FIG.220C (2-D-13) TRANSMISSION (DF40ATH E01)

REF NO.	PART NO.	DESCRIPTION	Q'TY	REMARKS
12	08211-20263	WASHER	1	
13	57610-94402	SHAFT, PROPELLER	1	
14	57621-87J02	SHIFTER, CLUTCH DOG	1	
15	09202-05022	PIN (5.5X38.5)	1	
16	57634-88L00	PIN, PUSH	1	
17	09440-08043	SPRING	1	
18	09440-40002	SPRING	1	
19	57631-95303	ROD, PUSH	1	
20	56120-94321-0EP	HOUSING, PROP SHAFT BEARING (BLACK)	1	
21	09263-22020	.BEARING (22.2X28.5X19)	1	
22	09289-22007	.OIL SEAL (22X35X5)	2	
23	09262-35070	.BEARING (35X62X14)	1	
24	09280-75001	O RING (D:3.3,ID:75)	1	
25	09116-08122	BOLT (8X30)	2	
26	56130-87J11-0EP	HOUSING, DRIVE SHAFT BEARING (BLACK)	1	
27	09282-17005	.OIL SEAL (17X32X6)	2	
28	08331-41329	.CIRCLIP	1	
29	55122-88L00	RING, GEAR CASE SEAL	1	
30	09202-06025	PIN (6X17)	1	
31	09202-06027	PIN (6X23)	1	

FIG.220D

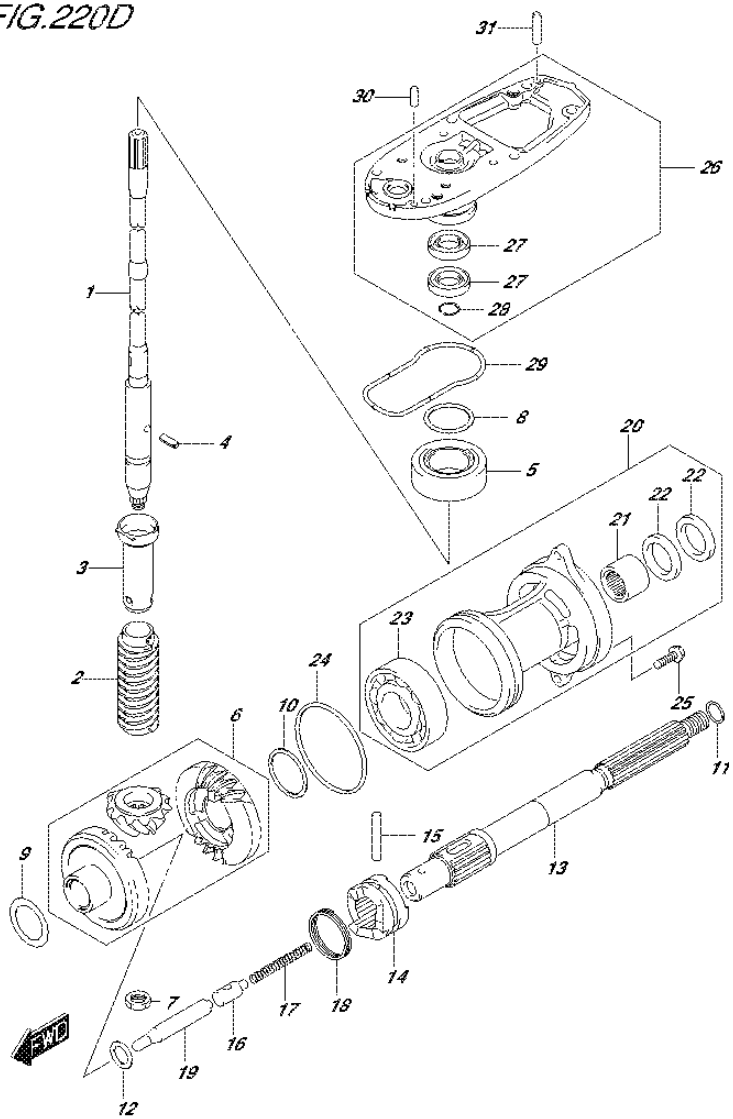

FIG.220D (2-D-14) TRANSMISSION (DF40AST E34)

REF NO.	PART NO.	DESCRIPTION	Q'TY	REMARKS
1-1	57110-88L02	SHAFT ASSY, DRIVE (S)	1	W/TRANSOM(S)
1-2	57110-88L12	SHAFT ASSY, DRIVE (L)	1	W/TRANSOM(L)
2	57133-88L01	COLLAR, DRIVE SHAFT	1	
3	57133-94400	HOUSING, DRIVE SHAFT SPRING	1	
4	09205-03019	SPRING PIN (3X10)	1	
5	09265-20015	BEARING (20X42X15)	1	
6	57300-88810	PINION/GEAR SET	1	
7	09140-12034	NUT	1	
8-1	09181-35101	SHIM (T:0.50)	AR	DRIVE SHAFT ADJUST
8-2	09181-33001	SHIM (T:0.55)	AR	
8-3	09181-33002	SHIM (T:0.60)	AR	
8-4	09181-33003	SHIM (T:0.65)	AR	
8-5	09181-33004	SHIM (T:0.70)	AR	
8-6	09181-33005	SHIM (T:0.75)	AR	
8-7	09181-33006	SHIM (T:0.80)	AR	
8-8	09181-33007	SHIM (T:0.85)	AR	
8-9	09181-33008	SHIM (T:0.90)	AR	
8-10	09181-33009	SHIM (T:0.95)	AR	
8-11	09181-35110	SHIM (T:1.00)	AR	
9-1	09181-30186	SHIM (T:0.50)	AR	FORWARD BACKUP
9-2	09181-30187	SHIM (T:0.60)	AR	
9-3	09181-30188	SHIM (T:0.70)	AR	
9-4	09181-30190	SHIM (T:0.80)	AR	
9-5	09181-30192	SHIM (T:0.90)	AR	
10-1	08221-35455	SHIM	AR	REVERSE BACKUP
10-2	09181-35131	SHIM (T:0.60)	AR	
10-3	09181-35132	SHIM (T:0.70)	AR	
10-4	08221-35456	SHIM	AR	
10-5	09181-35136	SHIM (T:0.90)	AR	
10-6	08211-35451	WASHER	AR	
11-1	09160-22018	WASHER (22.2X28X1.8)	1	PROP SHAFT THRUST
11-2	09160-22019	WASHER (22.5X28X1.9)	1	
11-3	09160-22020	WASHER (22.5X28X2)	1	
11-4	09160-22021	WASHER (22.5X28X2.1)	1	
11-5	09160-22022	WASHER (22.5X28X2.2)	1	
11-6	09160-22023	WASHER (22.5X28X2.3)	1	

FIG.220D

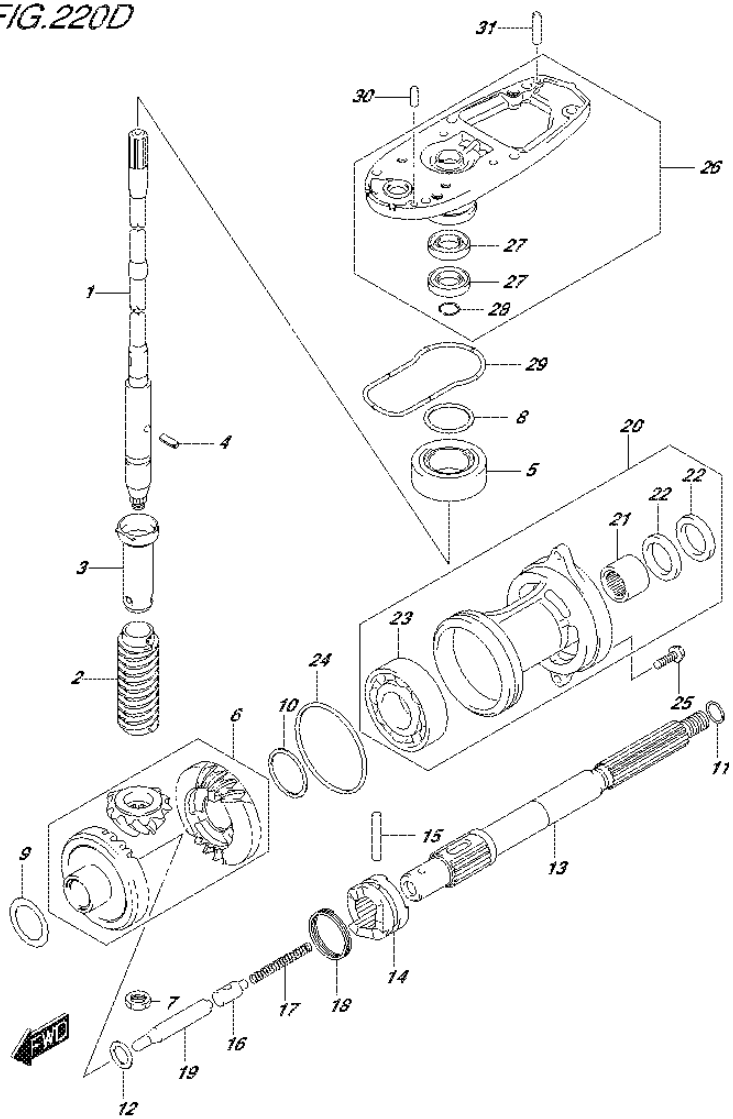

FIG.220D (2-D-15) TRANSMISSION (DF40AST E34)

REF NO.	PART NO.	DESCRIPTION	Q'TY	REMARKS
12	08211-20263	WASHER	1	
13	57610-94402	SHAFT, PROPELLER	1	
14	57621-87J02	SHIFTER, CLUTCH DOG	1	
15	09202-05022	PIN (5.5X38.5)	1	
16	57634-88L00	PIN, PUSH	1	
17	09440-08043	SPRING	1	
18	09440-40002	SPRING	1	
19	57631-95303	ROD, PUSH	1	
20-1	56120-94321-0EP	HOUSING, PROP SHAFT BEARING (BLACK)	1	
20-2	56120-94321-Y5S	HOUSING, PROP SHAFT BEARING (WHITE)	1	
21	09263-22020	.BEARING (22.2X28.5X19)	1	
22	09289-22007	.OIL SEAL (22X35X5)	2	
23	09262-35070	.BEARING (35X62X14)	1	
24	09280-75001	O RING (D:3.3,ID:75)	1	
25	09116-08122	BOLT (8X30)	2	
26-1	56130-87J11-0EP	HOUSING, DRIVE SHAFT BEARING (BLACK)	1	
26-2	56130-87J11-Y5S	HOUSING, DRIVE SHAFT BEARING (WHITE)	1	
27	09282-17005	.OIL SEAL (17X32X6)	2	
28	08331-41329	.CIRCLIP	1	
29	55122-88L00	RING, GEAR CASE SEAL	1	
30	09202-06025	PIN (6X17)	1	
31	09202-06027	PIN (6X23)	1	

FIG.220E

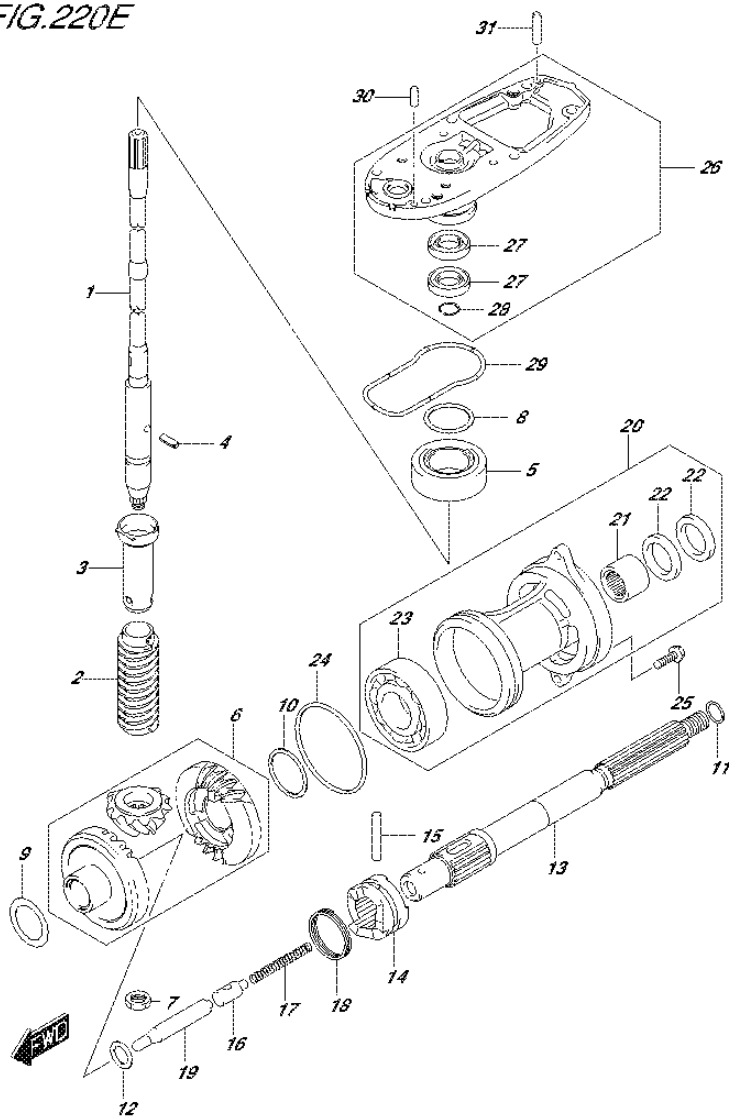

FIG.220E (2-E-2) TRANSMISSION (DF50A E01)

REF NO.	PART NO.	DESCRIPTION	Q'TY	REMARKS
1-1	57110-88L02	SHAFT ASSY, DRIVE (S)	1	W/TRANSOM(S)
1-2	57110-88L12	SHAFT ASSY, DRIVE (L)	1	W/TRANSOM(L)
2	57133-88L01	COLLAR, DRIVE SHAFT	1	
3	57133-94400	HOUSING, DRIVE SHAFT SPRING	1	
4	09205-03019	SPRING PIN (3X10)	1	
5	09265-20015	BEARING (20X42X15)	1	
6	57300-88810	PINION/GEAR SET	1	
7	09140-12034	NUT	1	
8-1	09181-35101	SHIM (T:0.50)	AR	DRIVE SHAFT ADJUST
8-2	09181-33001	SHIM (T:0.55)	AR	
8-3	09181-33002	SHIM (T:0.60)	AR	
8-4	09181-33003	SHIM (T:0.65)	AR	
8-5	09181-33004	SHIM (T:0.70)	AR	
8-6	09181-33005	SHIM (T:0.75)	AR	
8-7	09181-33006	SHIM (T:0.80)	AR	
8-8	09181-33007	SHIM (T:0.85)	AR	
8-9	09181-33008	SHIM (T:0.90)	AR	
8-10	09181-33009	SHIM (T:0.95)	AR	
8-11	09181-35110	SHIM (T:1.00)	AR	
9-1	09181-30186	SHIM (T:0.50)	AR	FORWARD BACKUP
9-2	09181-30187	SHIM (T:0.60)	AR	
9-3	09181-30188	SHIM (T:0.70)	AR	
9-4	09181-30190	SHIM (T:0.80)	AR	
9-5	09181-30192	SHIM (T:0.90)	AR	
10-1	08221-35455	SHIM	AR	REVERSE BACKUP
10-2	09181-35131	SHIM (T:0.60)	AR	
10-3	09181-35132	SHIM (T:0.70)	AR	
10-4	08221-35456	SHIM	AR	
10-5	09181-35136	SHIM (T:0.90)	AR	
10-6	08211-35451	WASHER	AR	
11-1	09160-22018	WASHER (22.2X28X1.8)	1	PROP SHAFT THRUST
11-2	09160-22019	WASHER (22.5X28X1.9)	1	
11-3	09160-22020	WASHER (22.5X28X2)	1	
11-4	09160-22021	WASHER (22.5X28X2.1)	1	
11-5	09160-22022	WASHER (22.5X28X2.2)	1	
11-6	09160-22023	WASHER (22.5X28X2.3)	1	

FIG.220E

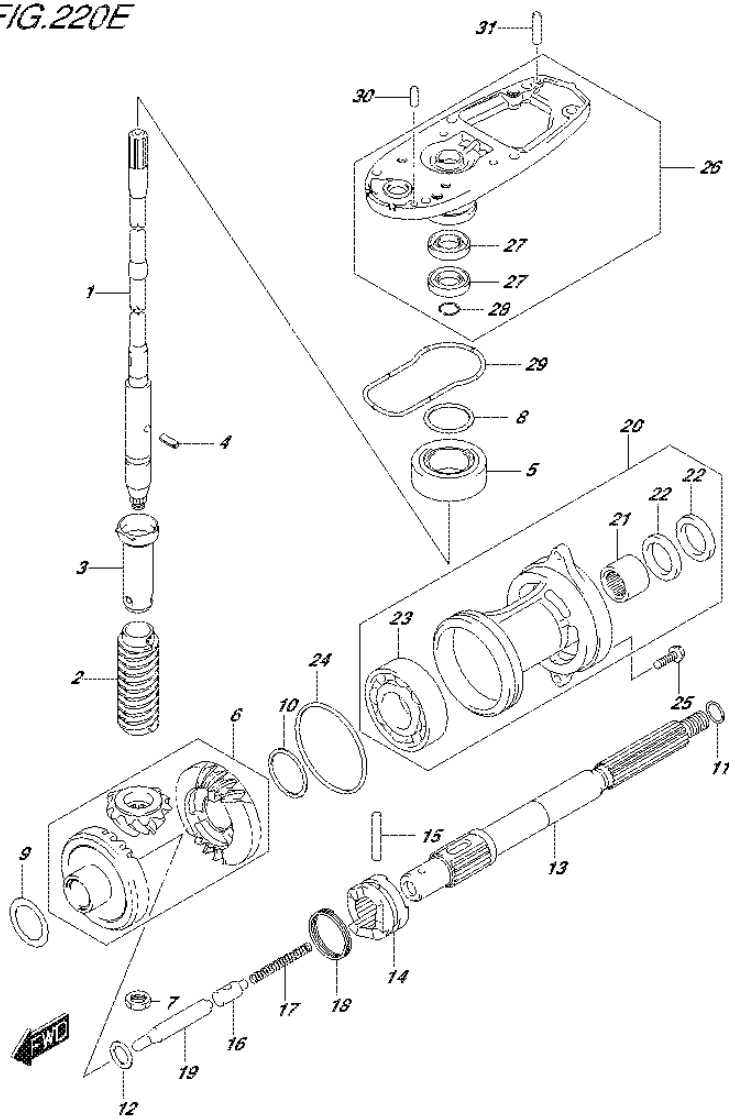

FIG.220E (2-E-3) TRANSMISSION (DF50A E01)

REF NO.	PART NO.	DESCRIPTION	Q'TY	REMARKS
12	08211-20263	WASHER	1	
13	57610-94402	SHAFT, PROPELLER	1	
14	57621-87J02	SHIFTER, CLUTCH DOG	1	
15	09202-05022	PIN (5.5X38.5)	1	
16	57634-88L00	PIN, PUSH	1	
17	09440-08043	SPRING	1	
18	09440-40002	SPRING	1	
19	57631-95303	ROD, PUSH	1	
20-1	56120-94321-0EP	HOUSING, PROP SHAFT BEARING (BLACK)	1	
20-2	56120-94321-Y5S	HOUSING, PROP SHAFT BEARING (WHITE)	1	
21	09263-22020	.BEARING (22.2X28.5X19)	1	
22	09289-22007	.OIL SEAL (22X35X5)	2	
23	09262-35070	.BEARING (35X62X14)	1	
24	09280-75001	O RING (D:3.3,ID:75)	1	
25	09116-08122	BOLT (8X30)	2	
26-1	56130-87J11-0EP	HOUSING, DRIVE SHAFT BEARING (BLACK)	1	
26-2	56130-87J11-Y5S	HOUSING, DRIVE SHAFT BEARING (WHITE)	1	
27	09282-17005	.OIL SEAL (17X32X6)	2	
28	08331-41329	.CIRCLIP	1	
29	55122-88L00	RING, GEAR CASE SEAL	1	
30	09202-06025	PIN (6X17)	1	
31	09202-06027	PIN (6X23)	1	

FIG.220F

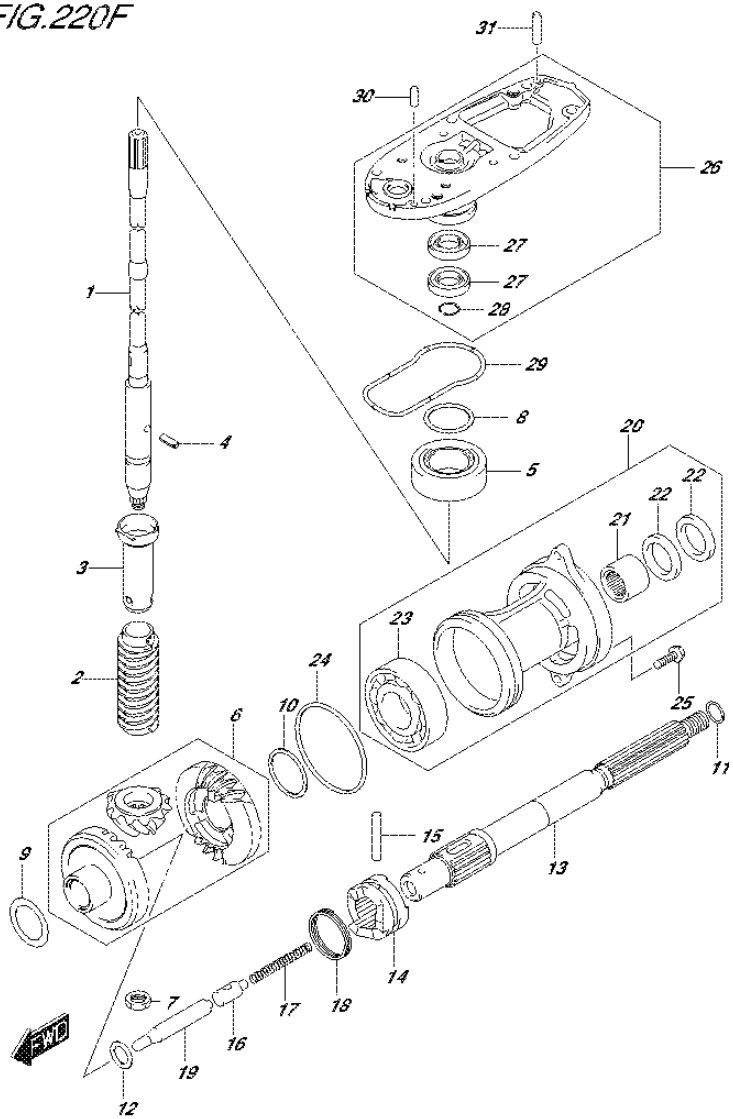

FIG.220F (2-E-4) TRANSMISSION (DF50ATH E01)

REF NO.	PART NO.	DESCRIPTION	Q'TY	REMARKS
1	57110-88L12	SHAFT ASSY, DRIVE (L)	1	
2	57133-88L01	COLLAR, DRIVE SHAFT	1	
3	57133-94400	HOUSING, DRIVE SHAFT SPRING	1	
4	09205-03019	SPRING PIN (3X10)	1	
5	09265-20015	BEARING (20X42X15)	1	
6	57300-88810	PINION/GEAR SET	1	
7	09140-12034	NUT	1	
8-1	09181-35101	SHIM (T:0.50)	AR	DRIVE SHAFT ADJUST
8-2	09181-33001	SHIM (T:0.55)	AR	
8-3	09181-33002	SHIM (T:0.60)	AR	
8-4	09181-33003	SHIM (T:0.65)	AR	
8-5	09181-33004	SHIM (T:0.70)	AR	
8-6	09181-33005	SHIM (T:0.75)	AR	
8-7	09181-33006	SHIM (T:0.80)	AR	
8-8	09181-33007	SHIM (T:0.85)	AR	
8-9	09181-33008	SHIM (T:0.90)	AR	
8-10	09181-33009	SHIM (T:0.95)	AR	
8-11	09181-35110	SHIM (T:1.00)	AR	
9-1	09181-30186	SHIM (T:0.50)	AR	FORWARD BACKUP
9-2	09181-30187	SHIM (T:0.60)	AR	
9-3	09181-30188	SHIM (T:0.70)	AR	
9-4	09181-30190	SHIM (T:0.80)	AR	
9-5	09181-30192	SHIM (T:0.90)	AR	
10-1	08221-35455	SHIM	AR	REVERSE BACKUP
10-2	09181-35131	SHIM (T:0.60)	AR	
10-3	09181-35132	SHIM (T:0.70)	AR	
10-4	08221-35456	SHIM	AR	
10-5	09181-35136	SHIM (T:0.90)	AR	
10-6	08211-35451	WASHER	AR	
11-1	09160-22018	WASHER (22.2X28X1.8)	1	PROP SHAFT THRUST
11-2	09160-22019	WASHER (22.5X28X1.9)	1	
11-3	09160-22020	WASHER (22.5X28X2)	1	
11-4	09160-22021	WASHER (22.5X28X2.1)	1	
11-5	09160-22022	WASHER (22.5X28X2.2)	1	
11-6	09160-22023	WASHER (22.5X28X2.3)	1	

FIG.220F

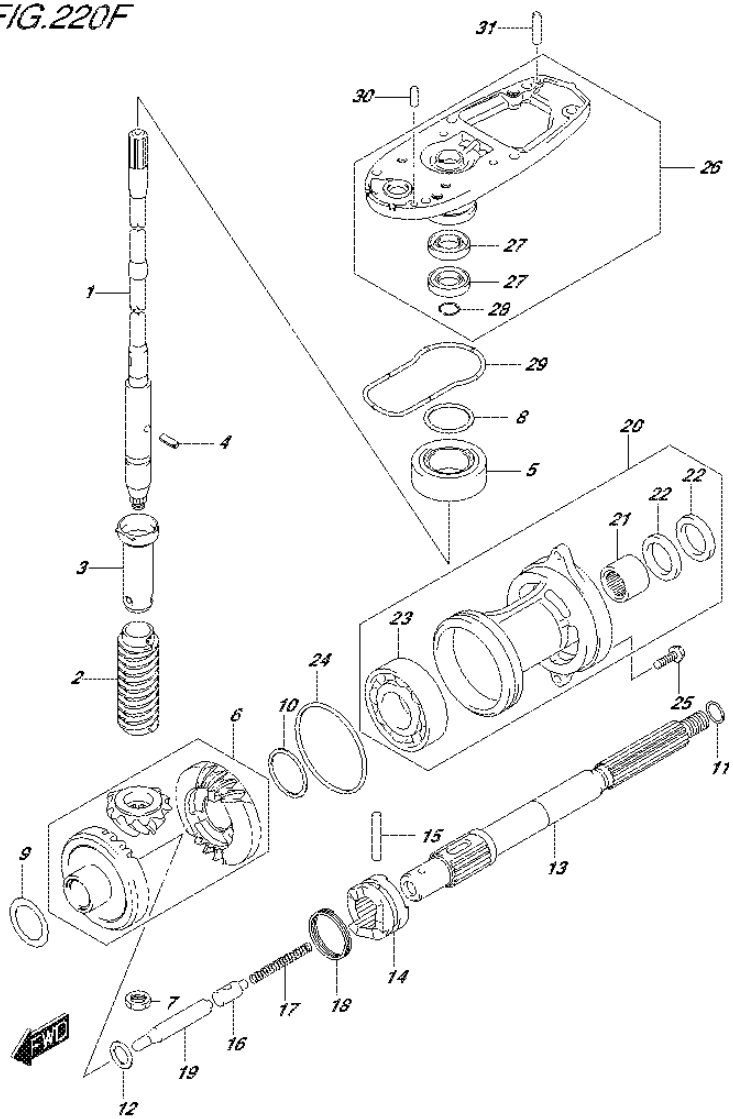

FIG.220F (2-E-5) TRANSMISSION (DF50ATH E01)

REF NO.	PART NO.	DESCRIPTION	Q'TY	REMARKS
12	08211-20263	WASHER	1	
13	57610-94402	SHAFT, PROPELLER	1	
14	57621-87J02	SHIFTER, CLUTCH DOG	1	
15	09202-05022	PIN (5.5X38.5)	1	
16	57634-88L00	PIN, PUSH	1	
17	09440-08043	SPRING	1	
18	09440-40002	SPRING	1	
19	57631-95303	ROD, PUSH	1	
20	56120-94321-0EP	HOUSING, PROP SHAFT BEARING (BLACK)	1	
21	09263-22020	.BEARING (22.2X28.5X19)	1	
22	09289-22007	.OIL SEAL (22X35X5)	2	
23	09262-35070	.BEARING (35X62X14)	1	
24	09280-75001	O RING (D:3.3,ID:75)	1	
25	09116-08122	BOLT (8X30)	2	
26	56130-87J11-0EP	HOUSING, DRIVE SHAFT BEARING (BLACK)	1	
27	09282-17005	.OIL SEAL (17X32X6)	2	
28	08331-41329	.CIRCLIP	1	
29	55122-88L00	RING, GEAR CASE SEAL	1	
30	09202-06025	PIN (6X17)	1	
31	09202-06027	PIN (6X23)	1	

FIG.220G

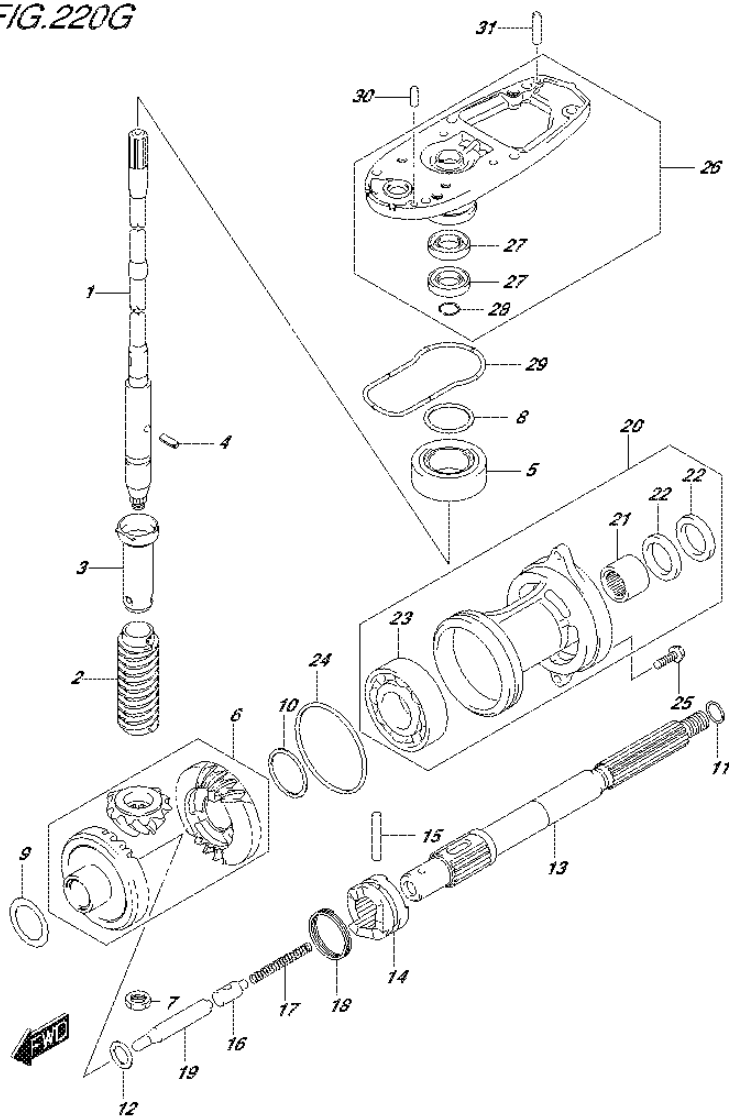

FIG.220G (2-E-6) TRANSMISSION (DF60A E01)

REF NO.	PART NO.	DESCRIPTION	Q'TY	REMARKS
1-1	57110-88L02	SHAFT ASSY, DRIVE (S)	1	W/TRANSOM(S)
1-2	57110-88L12	SHAFT ASSY, DRIVE (L)	1	W/TRANSOM(L)
1-3	57110-88L22	SHAFT ASSY, DRIVE (X)	1	W/TRANSOM(X)
2	57133-88L01	COLLAR, DRIVE SHAFT	1	
3	57133-94400	HOUSING, DRIVE SHAFT SPRING	1	
4	09205-03019	SPRING PIN (3X10)	1	
5	09265-20015	BEARING (20X42X15)	1	
6	57300-88810	PINION/GEAR SET	1	
7	09140-12034	NUT	1	
8-1	09181-35101	SHIM (T:0.50)	AR	DRIVE SHAFT ADJUST
8-2	09181-33001	SHIM (T:0.55)	AR	
8-3	09181-33002	SHIM (T:0.60)	AR	
8-4	09181-33003	SHIM (T:0.65)	AR	
8-5	09181-33004	SHIM (T:0.70)	AR	
8-6	09181-33005	SHIM (T:0.75)	AR	
8-7	09181-33006	SHIM (T:0.80)	AR	
8-8	09181-33007	SHIM (T:0.85)	AR	
8-9	09181-33008	SHIM (T:0.90)	AR	
8-10	09181-33009	SHIM (T:0.95)	AR	
8-11	09181-35110	SHIM (T:1.00)	AR	
9-1	09181-30186	SHIM (T:0.50)	AR	FORWARD BACKUP
9-2	09181-30187	SHIM (T:0.60)	AR	
9-3	09181-30188	SHIM (T:0.70)	AR	
9-4	09181-30190	SHIM (T:0.80)	AR	
9-5	09181-30192	SHIM (T:0.90)	AR	
10-1	08221-35455	SHIM	AR	REVERSE BACKUP
10-2	09181-35131	SHIM (T:0.60)	AR	
10-3	09181-35132	SHIM (T:0.70)	AR	
10-4	08221-35456	SHIM	AR	
10-5	09181-35136	SHIM (T:0.90)	AR	
10-6	08211-35451	WASHER	AR	

FIG.220G

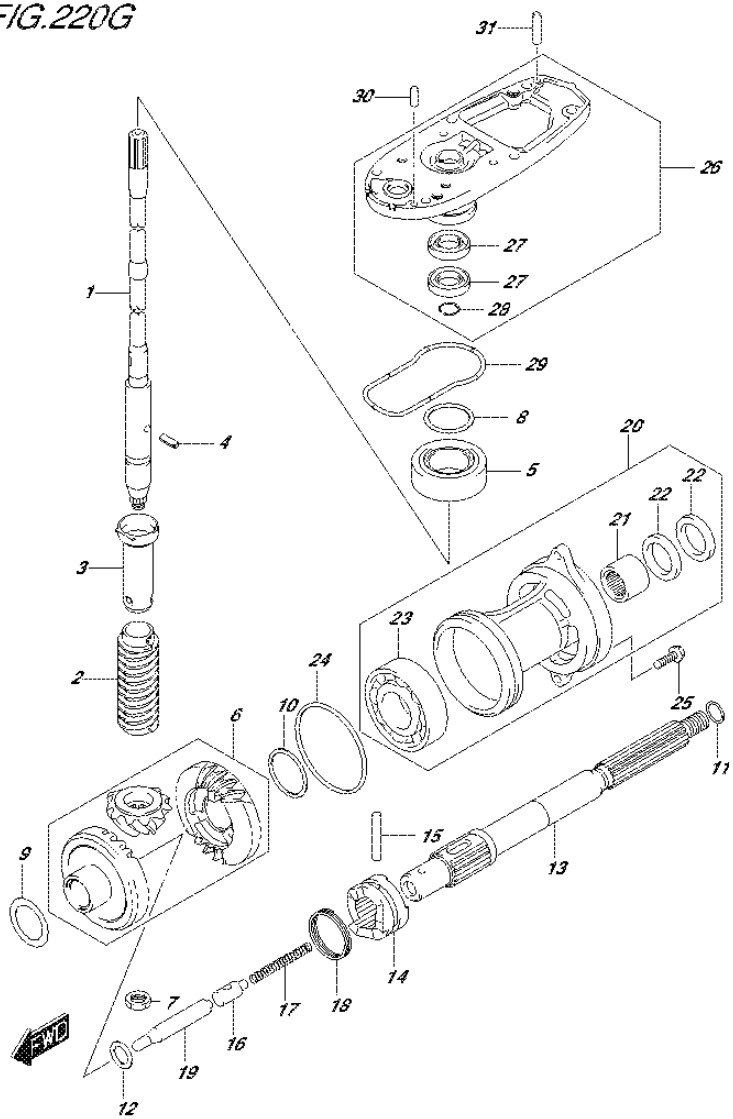

FIG.220G (2-E-7) TRANSMISSION (DF60A E01)

REF NO.	PART NO.	DESCRIPTION	Q'TY	REMARKS
11-1	09160-22018	WASHER (22.2X28X1.8)	1	PROP SHAFT THRUST
11-2	09160-22019	WASHER (22.5X28X1.9)	1	
11-3	09160-22020	WASHER (22.5X28X2)	1	
11-4	09160-22021	WASHER (22.5X28X2.1)	1	
11-5	09160-22022	WASHER (22.5X28X2.2)	1	
11-6	09160-22023	WASHER (22.5X28X2.3)	1	
12	08211-20263	WASHER	1	
13	57610-94402	SHAFT, PROPELLER	1	
14	57621-87J02	SHIFTER, CLUTCH DOG	1	
15	09202-05022	PIN (5.5X38.5)	1	
16	57634-88L00	PIN, PUSH	1	
17	09440-08043	SPRING	1	
18	09440-40002	SPRING	1	
19	57631-95303	ROD, PUSH	1	
20-1	56120-94321-0EP	HOUSING, PROP SHAFT BEARING (BLACK)	1	
20-2	56120-94321-Y5S	HOUSING, PROP SHAFT BEARING (WHITE)	1	
21	09263-22020	.BEARING (22.2X28.5X19)	1	
22	09289-22007	.OIL SEAL (22X35X5)	2	
23	09262-35070	.BEARING (35X62X14)	1	
24	09280-75001	O RING (D:3.3,ID:75)	1	
25	09116-08122	BOLT (8X30)	2	
26-1	56130-87J11-0EP	HOUSING, DRIVE SHAFT BEARING (BLACK)	1	
26-2	56130-87J11-Y5S	HOUSING, DRIVE SHAFT BEARING (WHITE)	1	
27	09282-17005	.OIL SEAL (17X32X6)	2	
28	08331-41329	.CIRCLIP	1	
29	55122-88L00	RING, GEAR CASE SEAL	1	
30	09202-06025	PIN (6X17)	1	
31	09202-06027	PIN (6X23)	1	

FIG.220H

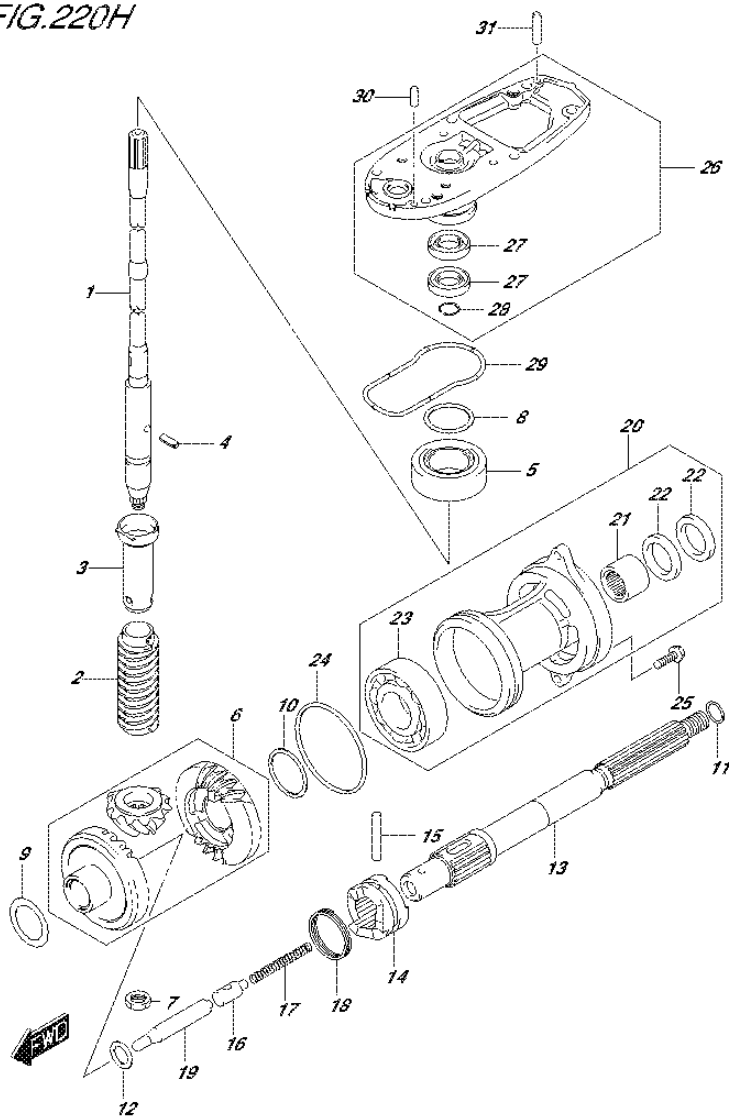

FIG.220H (2-E-8) TRANSMISSION (DF60A E40)

REF NO.	PART NO.	DESCRIPTION	Q'TY	REMARKS
1-1	57110-88L12	SHAFT ASSY, DRIVE (L)	1	W/TRANSOM(L)
1-2	57110-88L22	SHAFT ASSY, DRIVE (X)	1	W/TRANSOM(X)
2	57133-88L01	COLLAR, DRIVE SHAFT	1	
3	57133-94400	HOUSING, DRIVE SHAFT SPRING	1	
4	09205-03019	SPRING PIN (3X10)	1	
5	09265-20015	BEARING (20X42X15)	1	
6	57300-88810	PINION/GEAR SET	1	
7	09140-12034	NUT	1	
8-1	09181-35101	SHIM (T:0.50)	AR	DRIVE SHAFT ADJUST
8-2	09181-33001	SHIM (T:0.55)	AR	
8-3	09181-33002	SHIM (T:0.60)	AR	
8-4	09181-33003	SHIM (T:0.65)	AR	
8-5	09181-33004	SHIM (T:0.70)	AR	
8-6	09181-33005	SHIM (T:0.75)	AR	
8-7	09181-33006	SHIM (T:0.80)	AR	
8-8	09181-33007	SHIM (T:0.85)	AR	
8-9	09181-33008	SHIM (T:0.90)	AR	
8-10	09181-33009	SHIM (T:0.95)	AR	
8-11	09181-35110	SHIM (T:1.00)	AR	
9-1	09181-30186	SHIM (T:0.50)	AR	FORWARD BACKUP
9-2	09181-30187	SHIM (T:0.60)	AR	
9-3	09181-30188	SHIM (T:0.70)	AR	
9-4	09181-30190	SHIM (T:0.80)	AR	
9-5	09181-30192	SHIM (T:0.90)	AR	
10-1	08221-35455	SHIM	AR	REVERSE BACKUP
10-2	09181-35131	SHIM (T:0.60)	AR	
10-3	09181-35132	SHIM (T:0.70)	AR	
10-4	08221-35456	SHIM	AR	
10-5	09181-35136	SHIM (T:0.90)	AR	
10-6	08211-35451	WASHER	AR	
11-1	09160-22018	WASHER (22.2X28X1.8)	1	PROP SHAFT THRUST
11-2	09160-22019	WASHER (22.5X28X1.9)	1	
11-3	09160-22020	WASHER (22.5X28X2)	1	
11-4	09160-22021	WASHER (22.5X28X2.1)	1	
11-5	09160-22022	WASHER (22.5X28X2.2)	1	
11-6	09160-22023	WASHER (22.5X28X2.3)	1	

FIG.220H

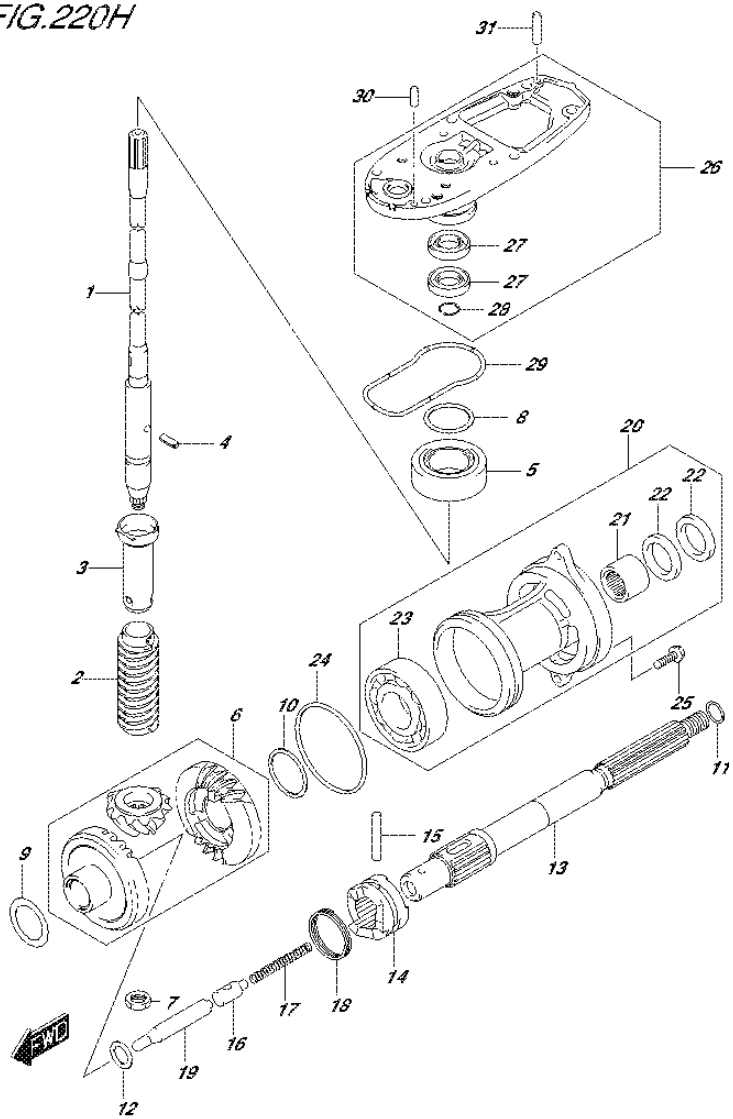

FIG.220H (2-E-9) TRANSMISSION (DF60A E40)

REF NO.	PART NO.	DESCRIPTION	Q'TY	REMARKS
12	08211-20263	WASHER	1	
13	57610-94402	SHAFT, PROPELLER	1	
14	57621-87J02	SHIFTER, CLUTCH DOG	1	
15	09202-05022	PIN (5.5X38.5)	1	
16	57634-88L00	PIN, PUSH	1	
17	09440-08043	SPRING	1	
18	09440-40002	SPRING	1	
19	57631-95303	ROD, PUSH	1	
20-1	56120-94321-0EP	HOUSING, PROP SHAFT BEARING (BLACK)	1	
20-2	56120-94321-Y5S	HOUSING, PROP SHAFT BEARING (WHITE)	1	
21	09263-22020	.BEARING (22.2X28.5X19)	1	
22	09289-22007	.OIL SEAL (22X35X5)	2	
23	09262-35070	.BEARING (35X62X14)	1	
24	09280-75001	O RING (D:3.3,ID:75)	1	
25	09116-08122	BOLT (8X30)	2	
26-1	56130-87J11-0EP	HOUSING, DRIVE SHAFT BEARING (BLACK)	1	
26-2	56130-87J11-Y5S	HOUSING, DRIVE SHAFT BEARING (WHITE)	1	
27	09282-17005	.OIL SEAL (17X32X6)	2	
28	08331-41329	.CIRCLIP	1	
29	55122-88L00	RING, GEAR CASE SEAL	1	
30	09202-06025	PIN (6X17)	1	
31	09202-06027	PIN (6X23)	1	

FIG.220J

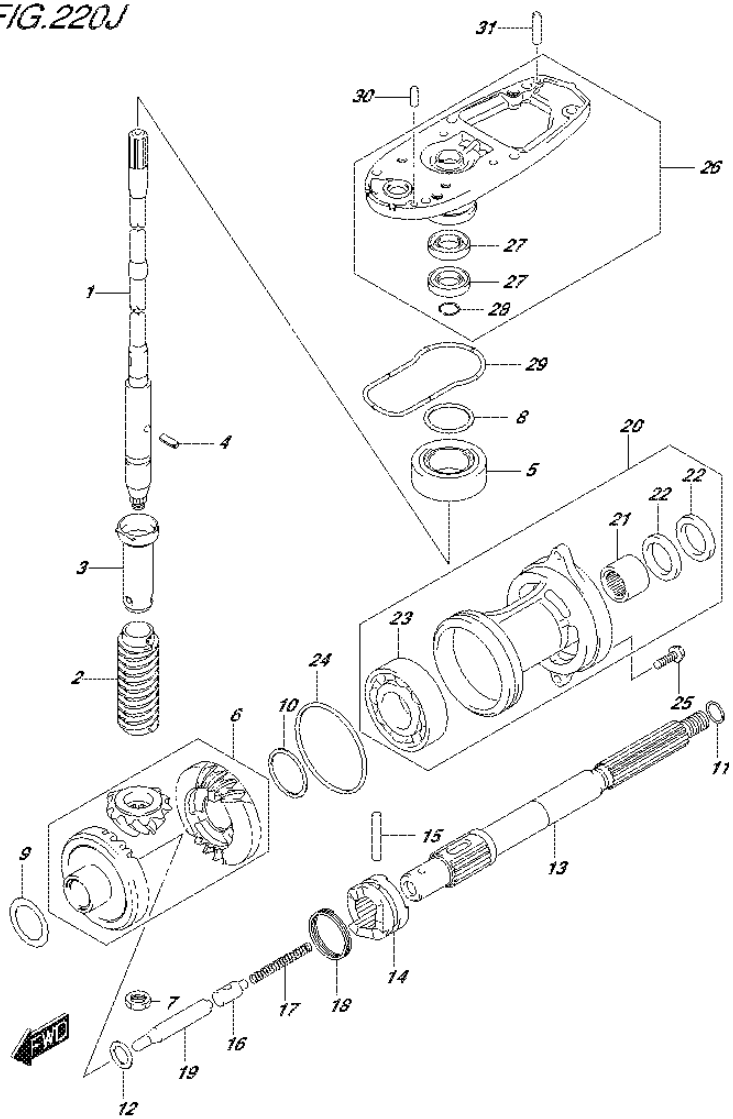

FIG.220J (2-E-10) TRANSMISSION (DF60AQH E01)

REF NO.	PART NO.	DESCRIPTION	Q'TY	REMARKS
1-1	57110-88L12	SHAFT ASSY, DRIVE (L)	1	W/TRANSOM(L)
1-2	57110-88L22	SHAFT ASSY, DRIVE (X)	1	W/TRANSOM(X)
2	57133-88L01	COLLAR, DRIVE SHAFT	1	
3	57133-94400	HOUSING, DRIVE SHAFT SPRING	1	
4	09205-03019	SPRING PIN (3X10)	1	
5	09265-20015	BEARING (20X42X15)	1	
6	57300-88810	PINION/GEAR SET	1	
7	09140-12034	NUT	1	
8-1	09181-35101	SHIM (T:0.50)	AR	DRIVE SHAFT ADJUST
8-2	09181-33001	SHIM (T:0.55)	AR	
8-3	09181-33002	SHIM (T:0.60)	AR	
8-4	09181-33003	SHIM (T:0.65)	AR	
8-5	09181-33004	SHIM (T:0.70)	AR	
8-6	09181-33005	SHIM (T:0.75)	AR	
8-7	09181-33006	SHIM (T:0.80)	AR	
8-8	09181-33007	SHIM (T:0.85)	AR	
8-9	09181-33008	SHIM (T:0.90)	AR	
8-10	09181-33009	SHIM (T:0.95)	AR	
8-11	09181-35110	SHIM (T:1.00)	AR	
9-1	09181-30186	SHIM (T:0.50)	AR	FORWARD BACKUP
9-2	09181-30187	SHIM (T:0.60)	AR	
9-3	09181-30188	SHIM (T:0.70)	AR	
9-4	09181-30190	SHIM (T:0.80)	AR	
9-5	09181-30192	SHIM (T:0.90)	AR	
10-1	08221-35455	SHIM	AR	REVERSE BACKUP
10-2	09181-35131	SHIM (T:0.60)	AR	
10-3	09181-35132	SHIM (T:0.70)	AR	
10-4	08221-35456	SHIM	AR	
10-5	09181-35136	SHIM (T:0.90)	AR	
10-6	08211-35451	WASHER	AR	
11-1	09160-22018	WASHER (22.2X28X1.8)	1	PROP SHAFT THRUST
11-2	09160-22019	WASHER (22.5X28X1.9)	1	
11-3	09160-22020	WASHER (22.5X28X2)	1	
11-4	09160-22021	WASHER (22.5X28X2.1)	1	
11-5	09160-22022	WASHER (22.5X28X2.2)	1	
11-6	09160-22023	WASHER (22.5X28X2.3)	1	

FIG.220J

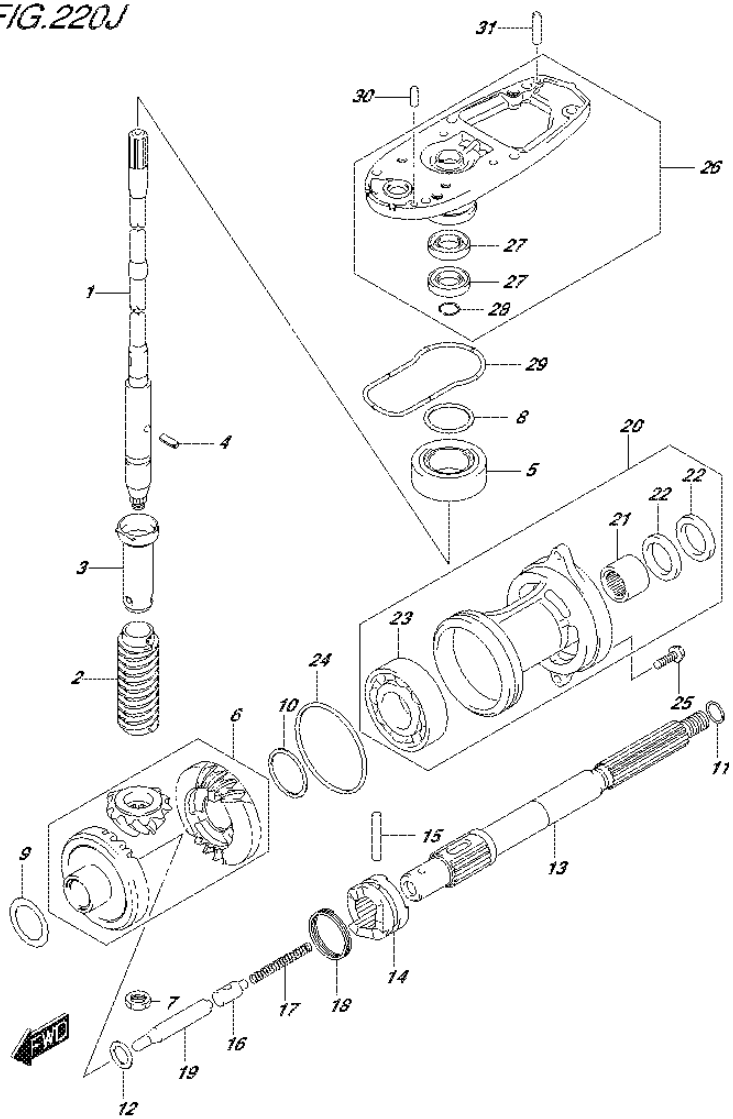

FIG.220J (2-E-11) TRANSMISSION (DF60AQH E01)

REF NO.	PART NO.	DESCRIPTION	Q'TY	REMARKS
12	08211-20263	WASHER	1	
13	57610-94402	SHAFT, PROPELLER	1	
14	57621-87J02	SHIFTER, CLUTCH DOG	1	
15	09202-05022	PIN (5.5X38.5)	1	
16	57634-88L00	PIN, PUSH	1	
17	09440-08043	SPRING	1	
18	09440-40002	SPRING	1	
19	57631-95303	ROD, PUSH	1	
20	56120-94321-0EP	HOUSING, PROP SHAFT BEARING (BLACK)	1	
21	09263-22020	.BEARING (22.2X28.5X19)	1	
22	09289-22007	.OIL SEAL (22X35X5)	2	
23	09262-35070	.BEARING (35X62X14)	1	
24	09280-75001	O RING (D:3.3,ID:75)	1	
25	09116-08122	BOLT (8X30)	2	
26	56130-87J11-0EP	HOUSING, DRIVE SHAFT BEARING (BLACK)	1	
27	09282-17005	.OIL SEAL (17X32X6)	2	
28	08331-41329	.CIRCLIP	1	
29	55122-88L00	RING, GEAR CASE SEAL	1	
30	09202-06025	PIN (6X17)	1	
31	09202-06027	PIN (6X23)	1	

FIG.220K

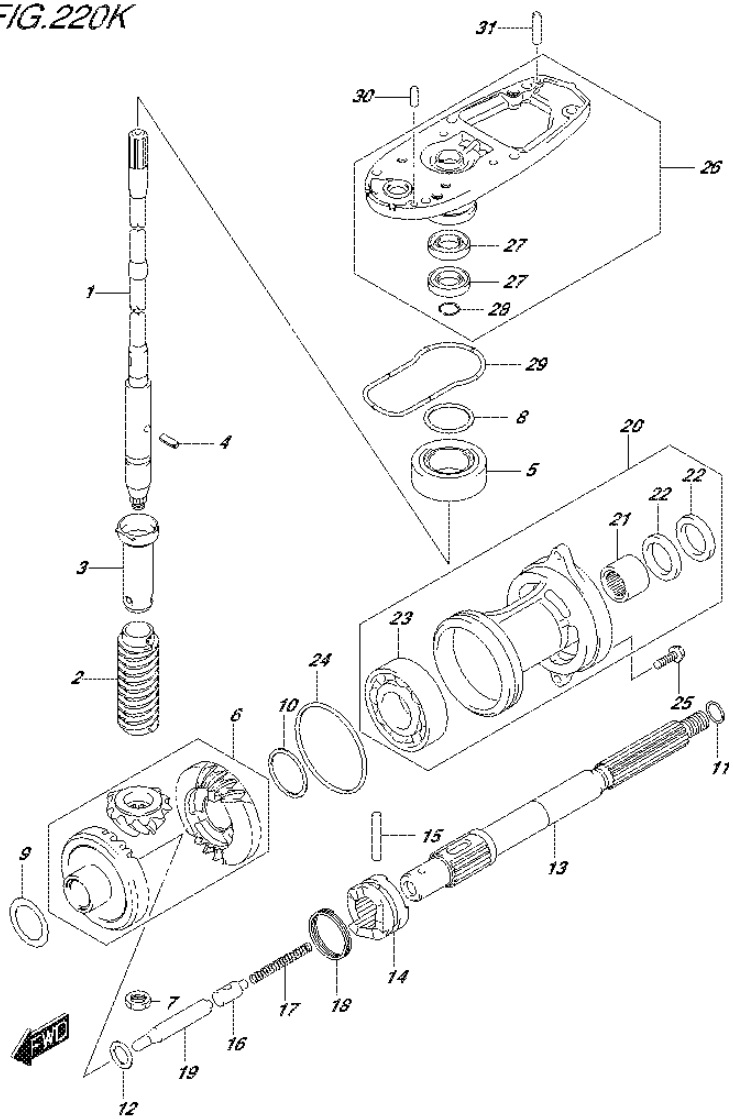

FIG.220K (2-E-12) TRANSMISSION (DF60AQH E40)

REF NO.	PART NO.	DESCRIPTION	Q'TY	REMARKS
1-1	57110-88L12	SHAFT ASSY, DRIVE (L)	1	W/TRANSOM(L)
1-2	57110-88L22	SHAFT ASSY, DRIVE (X)	1	W/TRANSOM(X)
2	57133-88L01	COLLAR, DRIVE SHAFT	1	
3	57133-94400	HOUSING, DRIVE SHAFT SPRING	1	
4	09205-03019	SPRING PIN (3X10)	1	
5	09265-20015	BEARING (20X42X15)	1	
6	57300-88810	PINION/GEAR SET	1	
7	09140-12034	NUT	1	
8-1	09181-35101	SHIM (T:0.50)	AR	DRIVE SHAFT ADJUST
8-2	09181-33001	SHIM (T:0.55)	AR	
8-3	09181-33002	SHIM (T:0.60)	AR	
8-4	09181-33003	SHIM (T:0.65)	AR	
8-5	09181-33004	SHIM (T:0.70)	AR	
8-6	09181-33005	SHIM (T:0.75)	AR	
8-7	09181-33006	SHIM (T:0.80)	AR	
8-8	09181-33007	SHIM (T:0.85)	AR	
8-9	09181-33008	SHIM (T:0.90)	AR	
8-10	09181-33009	SHIM (T:0.95)	AR	
8-11	09181-35110	SHIM (T:1.00)	AR	
9-1	09181-30186	SHIM (T:0.50)	AR	FORWARD BACKUP
9-2	09181-30187	SHIM (T:0.60)	AR	
9-3	09181-30188	SHIM (T:0.70)	AR	
9-4	09181-30190	SHIM (T:0.80)	AR	
9-5	09181-30192	SHIM (T:0.90)	AR	
10-1	08221-35455	SHIM	AR	REVERSE BACKUP
10-2	09181-35131	SHIM (T:0.60)	AR	
10-3	09181-35132	SHIM (T:0.70)	AR	
10-4	08221-35456	SHIM	AR	
10-5	09181-35136	SHIM (T:0.90)	AR	
10-6	08211-35451	WASHER	AR	
11-1	09160-22018	WASHER (22.2X28X1.8)	1	PROP SHAFT THRUST
11-2	09160-22019	WASHER (22.5X28X1.9)	1	
11-3	09160-22020	WASHER (22.5X28X2)	1	
11-4	09160-22021	WASHER (22.5X28X2.1)	1	
11-5	09160-22022	WASHER (22.5X28X2.2)	1	
11-6	09160-22023	WASHER (22.5X28X2.3)	1	

FIG.220K

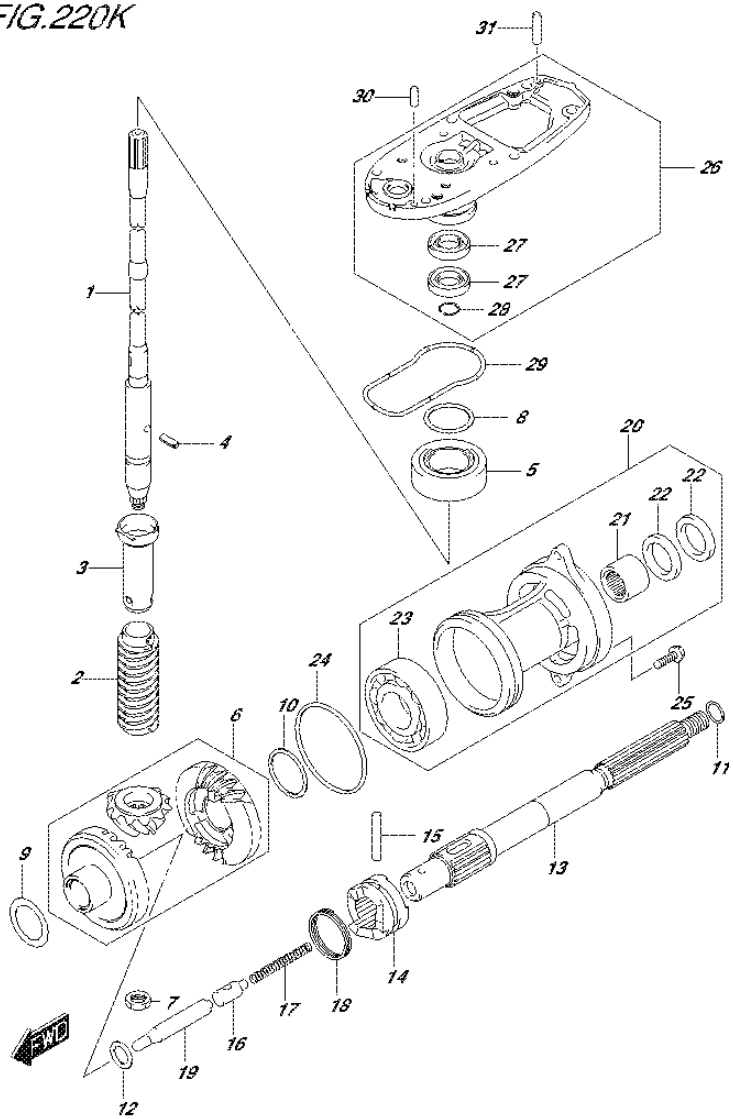

FIG.220K (2-E-13) TRANSMISSION (DF60AQH E40)

REF NO.	PART NO.	DESCRIPTION	Q'TY	REMARKS
12	08211-20263	WASHER	1	
13	57610-94402	SHAFT, PROPELLER	1	
14	57621-87J02	SHIFTER, CLUTCH DOG	1	
15	09202-05022	PIN (5.5X38.5)	1	
16	57634-88L00	PIN, PUSH	1	
17	09440-08043	SPRING	1	
18	09440-40002	SPRING	1	
19	57631-95303	ROD, PUSH	1	
20	56120-94321-0EP	HOUSING, PROP SHAFT BEARING (BLACK)	1	
21	09263-22020	.BEARING (22.2X28.5X19)	1	
22	09289-22007	.OIL SEAL (22X35X5)	2	
23	09262-35070	.BEARING (35X62X14)	1	
24	09280-75001	O RING (D:3.3,ID:75)	1	
25	09116-08122	BOLT (8X30)	2	
26	56130-87J11-0EP	HOUSING, DRIVE SHAFT BEARING (BLACK)	1	
27	09282-17005	.OIL SEAL (17X32X6)	2	
28	08331-41329	.CIRCLIP	1	
29	55122-88L00	RING, GEAR CASE SEAL	1	
30	09202-06025	PIN (6X17)	1	
31	09202-06027	PIN (6X23)	1	

FIG.220L

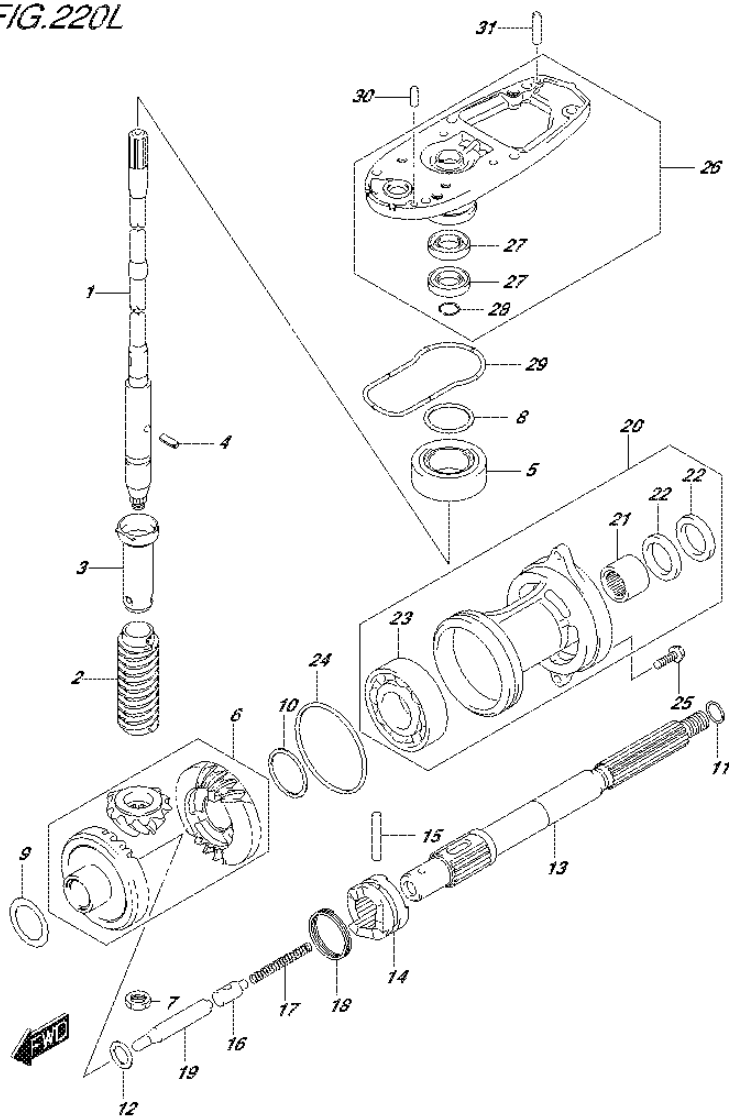

FIG.220L (2-E-14) TRANSMISSION (DF60ATH E01)

REF NO.	PART NO.	DESCRIPTION	Q'TY	REMARKS
1-1	57110-88L12	SHAFT ASSY, DRIVE (L)	1	W/TRANSOM(L)
1-2	57110-88L22	SHAFT ASSY, DRIVE (X)	1	W/TRANSOM(X)
2	57133-88L01	COLLAR, DRIVE SHAFT	1	
3	57133-94400	HOUSING, DRIVE SHAFT SPRING	1	
4	09205-03019	SPRING PIN (3X10)	1	
5	09265-20015	BEARING (20X42X15)	1	
6	57300-88810	PINION/GEAR SET	1	
7	09140-12034	NUT	1	
8-1	09181-35101	SHIM (T:0.50)	AR	DRIVE SHAFT ADJUST
8-2	09181-33001	SHIM (T:0.55)	AR	
8-3	09181-33002	SHIM (T:0.60)	AR	
8-4	09181-33003	SHIM (T:0.65)	AR	
8-5	09181-33004	SHIM (T:0.70)	AR	
8-6	09181-33005	SHIM (T:0.75)	AR	
8-7	09181-33006	SHIM (T:0.80)	AR	
8-8	09181-33007	SHIM (T:0.85)	AR	
8-9	09181-33008	SHIM (T:0.90)	AR	
8-10	09181-33009	SHIM (T:0.95)	AR	
8-11	09181-35110	SHIM (T:1.00)	AR	
9-1	09181-30186	SHIM (T:0.50)	AR	FORWARD BACKUP
9-2	09181-30187	SHIM (T:0.60)	AR	
9-3	09181-30188	SHIM (T:0.70)	AR	
9-4	09181-30190	SHIM (T:0.80)	AR	
9-5	09181-30192	SHIM (T:0.90)	AR	
10-1	08221-35455	SHIM	AR	REVERSE BACKUP
10-2	09181-35131	SHIM (T:0.60)	AR	
10-3	09181-35132	SHIM (T:0.70)	AR	
10-4	08221-35456	SHIM	AR	
10-5	09181-35136	SHIM (T:0.90)	AR	
10-6	08211-35451	WASHER	AR	
11-1	09160-22018	WASHER (22.2X28X1.8)	1	PROP SHAFT THRUST
11-2	09160-22019	WASHER (22.5X28X1.9)	1	
11-3	09160-22020	WASHER (22.5X28X2)	1	
11-4	09160-22021	WASHER (22.5X28X2.1)	1	
11-5	09160-22022	WASHER (22.5X28X2.2)	1	
11-6	09160-22023	WASHER (22.5X28X2.3)	1	

FIG.220L

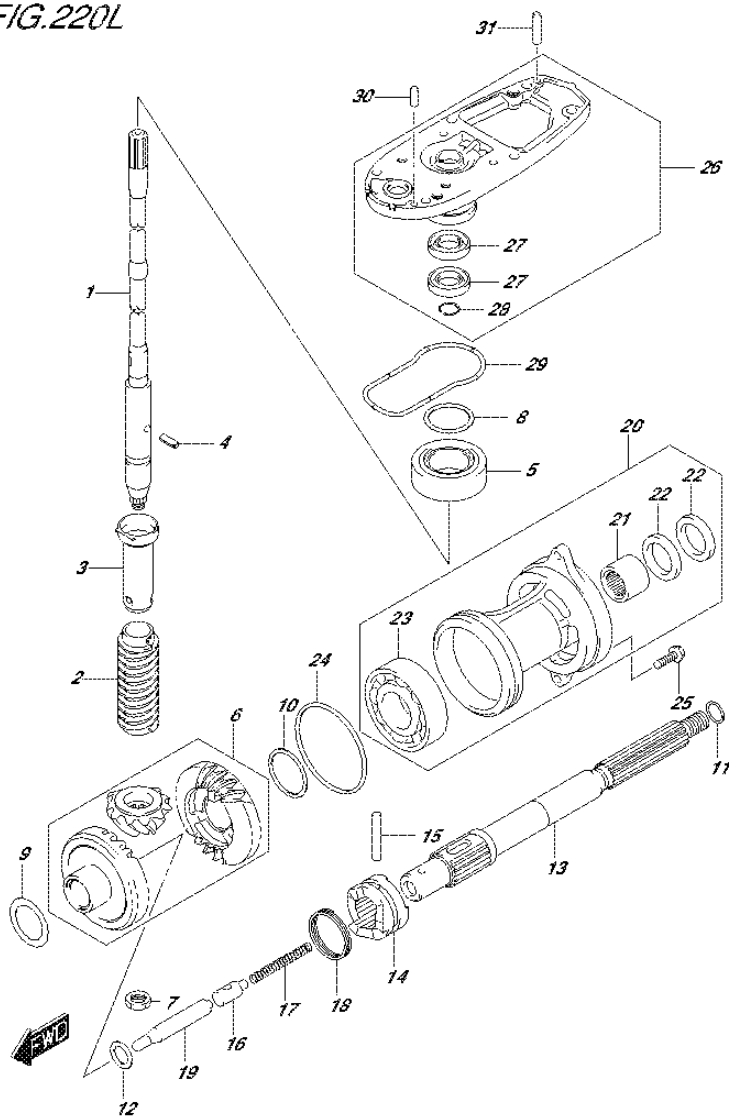

FIG.220L (2-E-15) TRANSMISSION (DF60ATH E01)

REF NO.	PART NO.	DESCRIPTION	Q'TY	REMARKS
12	08211-20263	WASHER	1	
13	57610-94402	SHAFT, PROPELLER	1	
14	57621-87J02	SHIFTER, CLUTCH DOG	1	
15	09202-05022	PIN (5.5X38.5)	1	
16	57634-88L00	PIN, PUSH	1	
17	09440-08043	SPRING	1	
18	09440-40002	SPRING	1	
19	57631-95303	ROD, PUSH	1	
20	56120-94321-0EP	HOUSING, PROP SHAFT BEARING (BLACK)	1	
21	09263-22020	.BEARING (22.2X28.5X19)	1	
22	09289-22007	.OIL SEAL (22X35X5)	2	
23	09262-35070	.BEARING (35X62X14)	1	
24	09280-75001	O RING (D:3.3,ID:75)	1	
25	09116-08122	BOLT (8X30)	2	
26	56130-87J11-0EP	HOUSING, DRIVE SHAFT BEARING (BLACK)	1	
27	09282-17005	.OIL SEAL (17X32X6)	2	
28	08331-41329	.CIRCLIP	1	
29	55122-88L00	RING, GEAR CASE SEAL	1	
30	09202-06025	PIN (6X17)	1	
31	09202-06027	PIN (6X23)	1	

FIG.220M

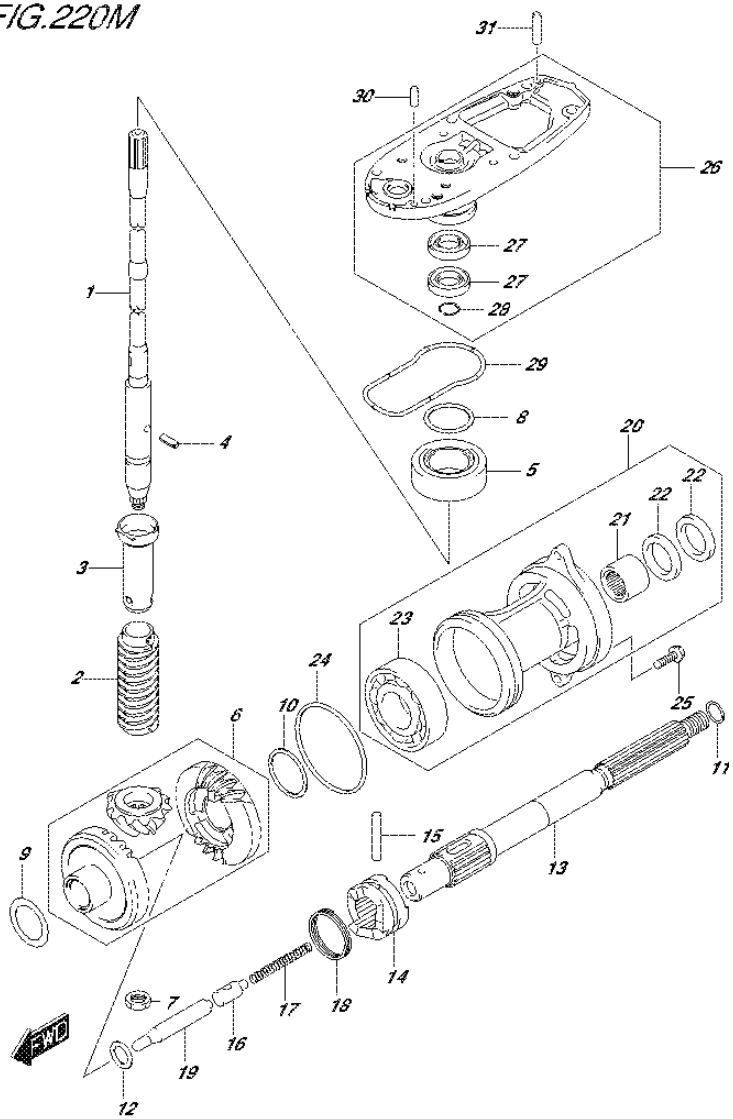

FIG.220M (2-F-2) TRANSMISSION (DF60ATH E40)

REF NO.	PART NO.	DESCRIPTION	Q'TY	REMARKS
1-1	57110-88L12	SHAFT ASSY, DRIVE (L)	1	W/TRANSOM(L)
1-2	57110-88L22	SHAFT ASSY, DRIVE (X)	1	W/TRANSOM(X)
2	57133-88L01	COLLAR, DRIVE SHAFT	1	
3	57133-94400	HOUSING, DRIVE SHAFT SPRING	1	
4	09205-03019	SPRING PIN (3X10)	1	
5	09265-20015	BEARING (20X42X15)	1	
6	57300-88810	PINION/GEAR SET	1	
7	09140-12034	NUT	1	
8-1	09181-35101	SHIM (T:0.50)	AR	DRIVE SHAFT ADJUST
8-2	09181-33001	SHIM (T:0.55)	AR	
8-3	09181-33002	SHIM (T:0.60)	AR	
8-4	09181-33003	SHIM (T:0.65)	AR	
8-5	09181-33004	SHIM (T:0.70)	AR	
8-6	09181-33005	SHIM (T:0.75)	AR	
8-7	09181-33006	SHIM (T:0.80)	AR	
8-8	09181-33007	SHIM (T:0.85)	AR	
8-9	09181-33008	SHIM (T:0.90)	AR	
8-10	09181-33009	SHIM (T:0.95)	AR	
8-11	09181-35110	SHIM (T:1.00)	AR	
9-1	09181-30186	SHIM (T:0.50)	AR	FORWARD BACKUP
9-2	09181-30187	SHIM (T:0.60)	AR	
9-3	09181-30188	SHIM (T:0.70)	AR	
9-4	09181-30190	SHIM (T:0.80)	AR	
9-5	09181-30192	SHIM (T:0.90)	AR	
10-1	08221-35455	SHIM	AR	REVERSE BACKUP
10-2	09181-35131	SHIM (T:0.60)	AR	
10-3	09181-35132	SHIM (T:0.70)	AR	
10-4	08221-35456	SHIM	AR	
10-5	09181-35136	SHIM (T:0.90)	AR	
10-6	08211-35451	WASHER	AR	
11-1	09160-22018	WASHER (22.2X28X1.8)	1	PROP SHAFT THRUST
11-2	09160-22019	WASHER (22.5X28X1.9)	1	
11-3	09160-22020	WASHER (22.5X28X2)	1	
11-4	09160-22021	WASHER (22.5X28X2.1)	1	
11-5	09160-22022	WASHER (22.5X28X2.2)	1	
11-6	09160-22023	WASHER (22.5X28X2.3)	1	

FIG.220M

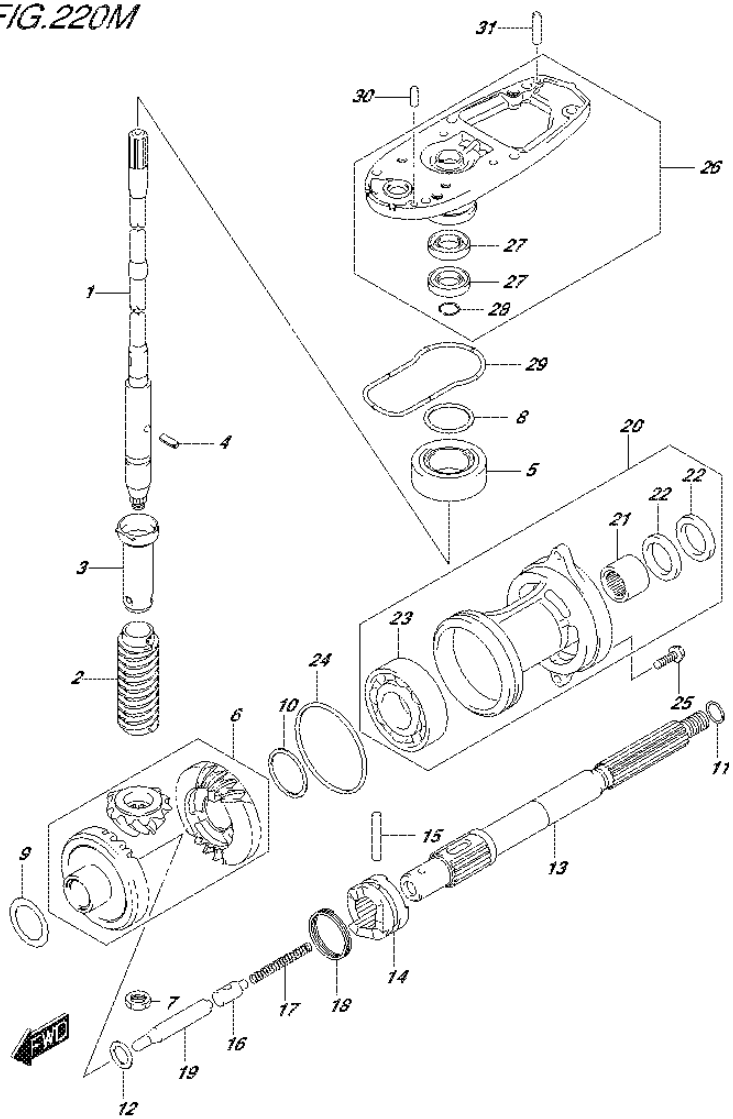

FIG.220M (2-F-3) TRANSMISSION (DF60ATH E40)

REF NO.	PART NO.	DESCRIPTION	Q'TY	REMARKS
12	08211-20263	WASHER	1	
13	57610-94402	SHAFT, PROPELLER	1	
14	57621-87J02	SHIFTER, CLUTCH DOG	1	
15	09202-05022	PIN (5.5X38.5)	1	
16	57634-88L00	PIN, PUSH	1	
17	09440-08043	SPRING	1	
18	09440-40002	SPRING	1	
19	57631-95303	ROD, PUSH	1	
20	56120-94321-0EP	HOUSING, PROP SHAFT BEARING (BLACK)	1	
21	09263-22020	.BEARING (22.2X28.5X19)	1	
22	09289-22007	.OIL SEAL (22X35X5)	2	
23	09262-35070	.BEARING (35X62X14)	1	
24	09280-75001	O RING (D:3.3,ID:75)	1	
25	09116-08122	BOLT (8X30)	2	
26	56130-87J11-0EP	HOUSING, DRIVE SHAFT BEARING (BLACK)	1	
27	09282-17005	.OIL SEAL (17X32X6)	2	
28	08331-41329	.CIRCLIP	1	
29	55122-88L00	RING, GEAR CASE SEAL	1	
30	09202-06025	PIN (6X17)	1	
31	09202-06027	PIN (6X23)	1	

FIG.220N

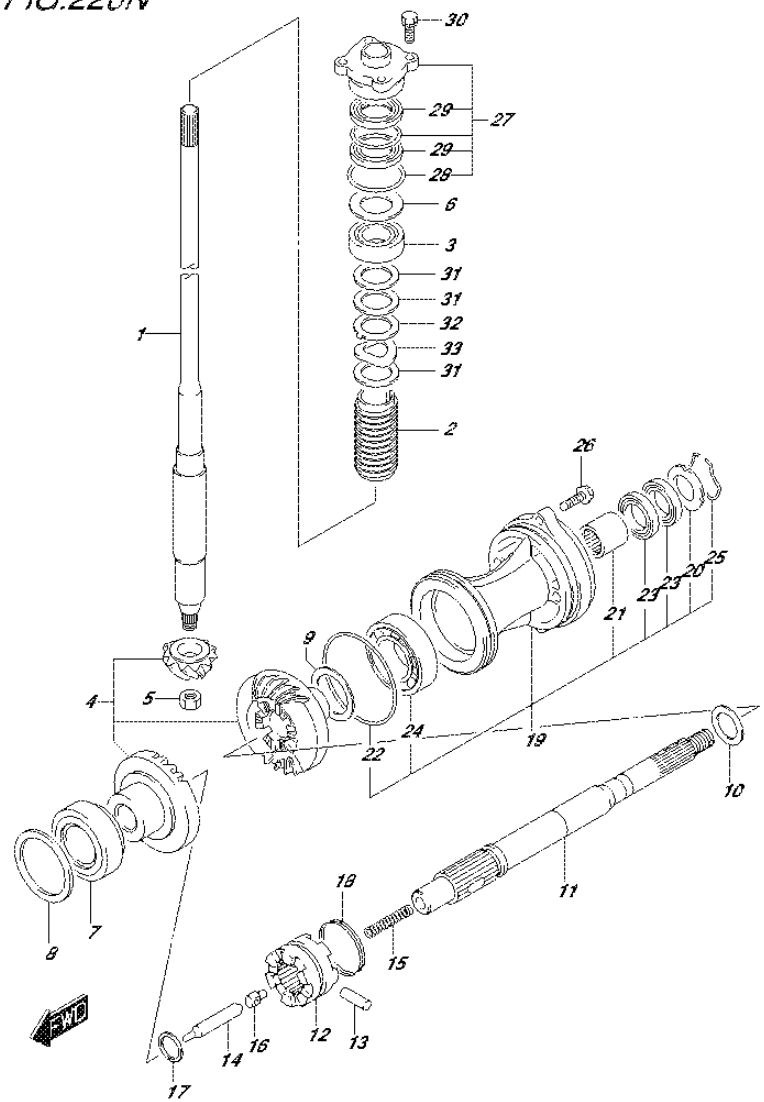

FIG.220N (2-F-4) TRANSMISSION (DF50AVT E01)

REF NO.	PART NO.	DESCRIPTION	Q'TY	REMARKS
1	57110-88L30	SHAFT ASSY, DRIVE (L)	1	
2	57133-90J02	COLLAR, DRIVE SHAFT	1	
3	09265-25046	BEARING (25X52X19.25)	1	
4	57300-99824	PINION/GEAR SET	1	
5	09140-14024	NUT	1	
6-1	09181-40186	SHIM (T:0.50)	1	
6-2	09181-41002	SHIM (T:0.55)	1	
6-3	09181-41003	SHIM (T:0.60)	1	
6-4	09181-41004	SHIM (T:0.65)	1	
6-5	09181-41005	SHIM (T:0.70)	1	
6-6	09181-41006	SHIM (T:0.75)	1	
6-7	09181-40190	SHIM (T:0.80)	1	
6-8	09181-41008	SHIM (T:0.85)	1	
6-9	09181-41009	SHIM (T:0.90)	1	
6-10	09181-41010	SHIM (T:0.95)	1	
6-11	09181-40195	SHIM (T:1.00)	1	
6-12	09181-41012	SHIM (T:1.05)	1	
6-13	09181-41013	SHIM (T:1.10)	1	
6-14	09181-41014	SHIM (T:1.15)	1	
7	09265-50003	BEARING (50X85X26)	1	PART OF GEAR CASE
8-1	09181-50020	SHIM (T:0.45)	1	FORWARD GEAR
8-2	09181-50021	SHIM (T:0.50)	1	
8-3	09181-50022	SHIM (T:0.55)	1	
8-4	09181-50023	SHIM (T:0.60)	1	
8-5	09181-50024	SHIM (T:0.65)	1	
8-6	09181-50025	SHIM (T:0.70)	1	
8-7	09181-50026	SHIM (T:0.75)	1	
8-8	09181-50027	SHIM (T:0.80)	1	
8-9	09181-50028	SHIM (T:0.85)	1	
8-10	09181-50029	SHIM (T:0.95)	1	

FIG.220N

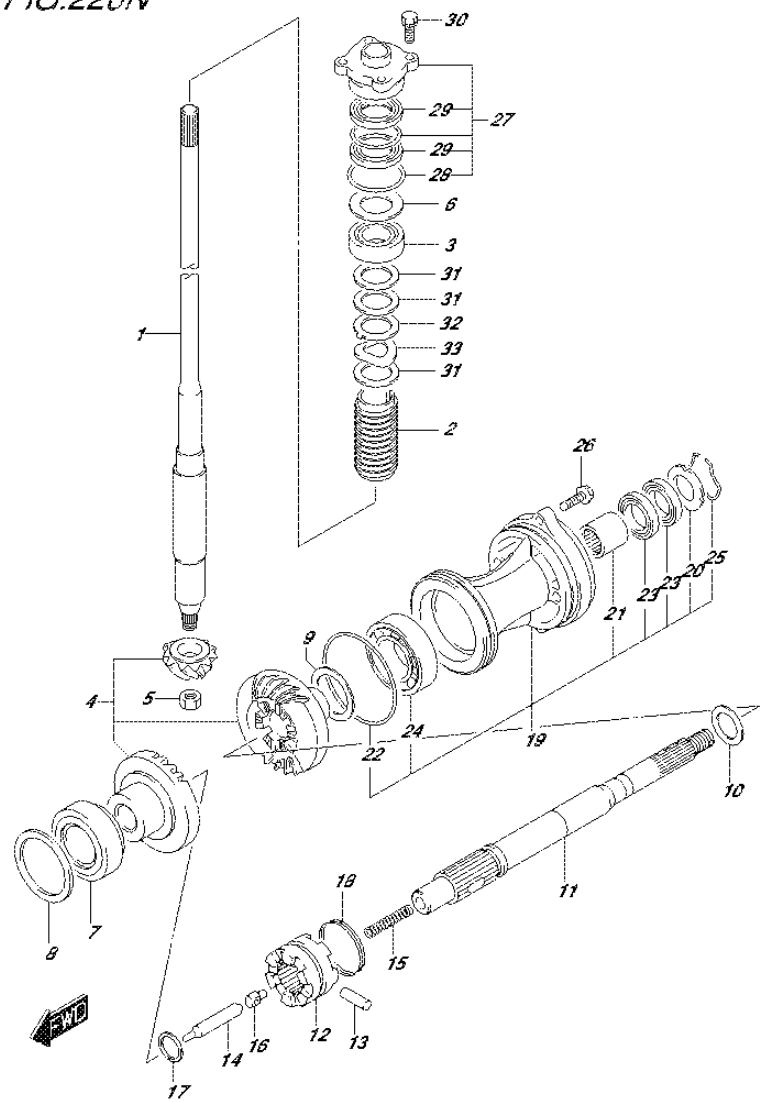

FIG.220N (2-F-5) TRANSMISSION (DF50AVT E01)

REF NO.	PART NO.	DESCRIPTION	Q'TY	REMARKS
9-1	09181-45003	SHIM (T:1.00)	1	REVERSE GEAR
9-2	09181-45004	SHIM (T:1.10)	1	
9-3	09181-45005	SHIM (T:1.20)	1	
9-4	09181-45006	SHIM (T:1.30)	1	
9-5	09181-45007	SHIM (T:1.40)	1	
9-6	09181-45008	SHIM (T:1.50)	1	
9-7	09181-45009	SHIM (T:1.60)	1	
10-1	09181-28015	SHIM (T:0.90)	1	PROP SHAFT REVERSE THRUST
10-2	09181-28016	SHIM (T:1.00)	1	
10-3	09181-28017	SHIM (T:1.20)	1	
10-4	09181-28018	SHIM (T:1.30)	1	
10-5	09181-28019	SHIM (T:1.40)	1	
10-6	09181-28020	SHIM (T:1.60)	1	
11	57610-88L10	SHAFT ASSY, PROPELLER	1	
12	57621-88L00	SHIFTER, CLUTCH DOG	1	
13	09202-07002	PIN (7X48)	1	
14	57631-99E01	ROD, PUSH	1	
15	09440-11020	SPRING	1	
16	09209-12007	PIN	1	
17	09181-25030	SHIM (25X32X3)	1	
18	09440-49004	SPRING	1	
19	56120-90J02-0EP	HOUSING, PROP SFT BRG (BLACK)	1	
20	56123-90J00	.WASHER, OIL SEAL PROTECTOR	1	
21	09263-28047	.BEARING (28X37X30)	1	
22	09280-97001	.O RING (D:3.5,ID:95)	1	
23	09282-28002	.OIL SEAL (28X50X6)	2	
24	08113-62090	.BEARING	1	
25	09387-52001	.RING SET	1	
26	09116-08122	BOLT (8X30)	2	
27	56130-87E00	HOUSING	1	
28	09280-46004	.O RING (D:3.5,ID:45.7)	1	
29	09282-22007	.OIL SEAL (22X36X6)	2	
30	09117-08110	BOLT (8X25)	4	
31	09181-31001	SHIM (31X46X2)	3	
32	09169-31001	WASHER	1	
33	09164-31001	WASHER	1	

FIG.220P

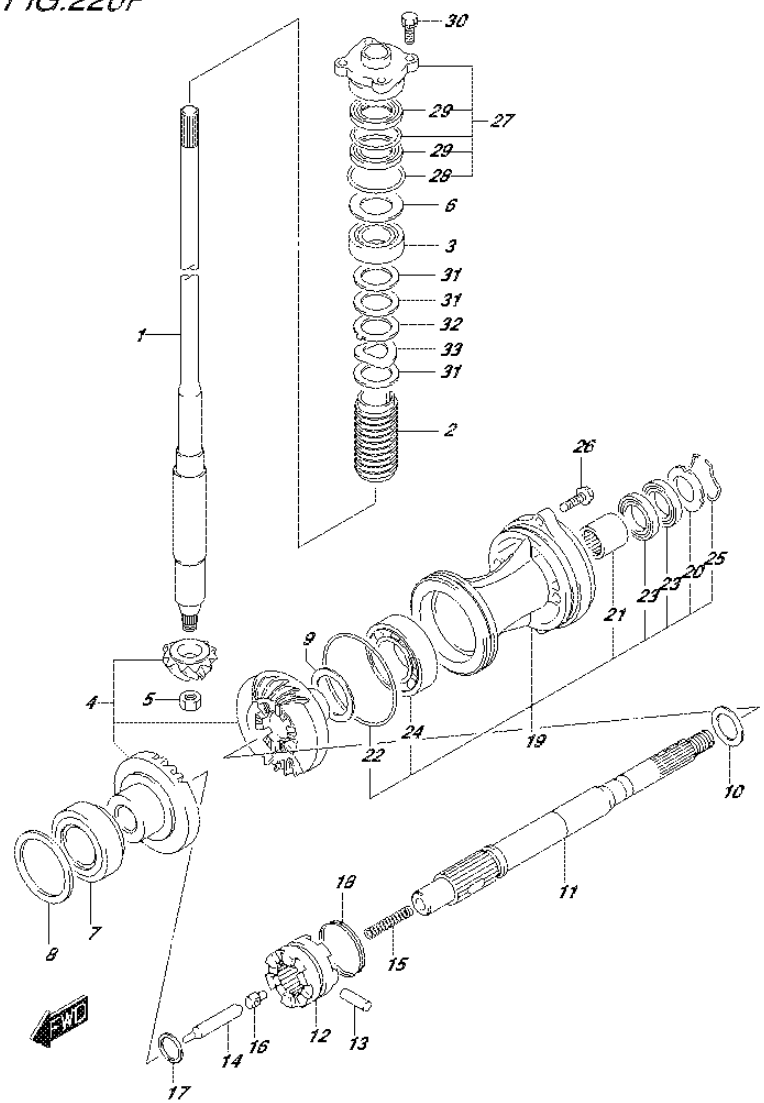

FIG.220P (2-F-6) TRANSMISSION (DF50AVTH E01)

REF NO.	PART NO.	DESCRIPTION	Q'TY	REMARKS
1	57110-88L30	SHAFT ASSY, DRIVE (L)	1	
2	57133-90J02	COLLAR, DRIVE SHAFT	1	
3	09265-25046	BEARING (25X52X19.25)	1	
4	57300-99824	PINION/GEAR SET	1	
5	09140-14024	NUT	1	
6-1	09181-40186	SHIM (T:0.50)	1	
6-2	09181-41002	SHIM (T:0.55)	1	
6-3	09181-41003	SHIM (T:0.60)	1	
6-4	09181-41004	SHIM (T:0.65)	1	
6-5	09181-41005	SHIM (T:0.70)	1	
6-6	09181-41006	SHIM (T:0.75)	1	
6-7	09181-40190	SHIM (T:0.80)	1	
6-8	09181-41008	SHIM (T:0.85)	1	
6-9	09181-41009	SHIM (T:0.90)	1	
6-10	09181-41010	SHIM (T:0.95)	1	
6-11	09181-40195	SHIM (T:1.00)	1	
6-12	09181-41012	SHIM (T:1.05)	1	
6-13	09181-41013	SHIM (T:1.10)	1	
6-14	09181-41014	SHIM (T:1.15)	1	
7	09265-50003	BEARING (50X85X26)	1	PART OF GEAR CASE
8-1	09181-50020	SHIM (T:0.45)	1	FORWARD GEAR
8-2	09181-50021	SHIM (T:0.50)	1	
8-3	09181-50022	SHIM (T:0.55)	1	
8-4	09181-50023	SHIM (T:0.60)	1	
8-5	09181-50024	SHIM (T:0.65)	1	
8-6	09181-50025	SHIM (T:0.70)	1	
8-7	09181-50026	SHIM (T:0.75)	1	
8-8	09181-50027	SHIM (T:0.80)	1	
8-9	09181-50028	SHIM (T:0.85)	1	
8-10	09181-50029	SHIM (T:0.95)	1	

FIG.220P

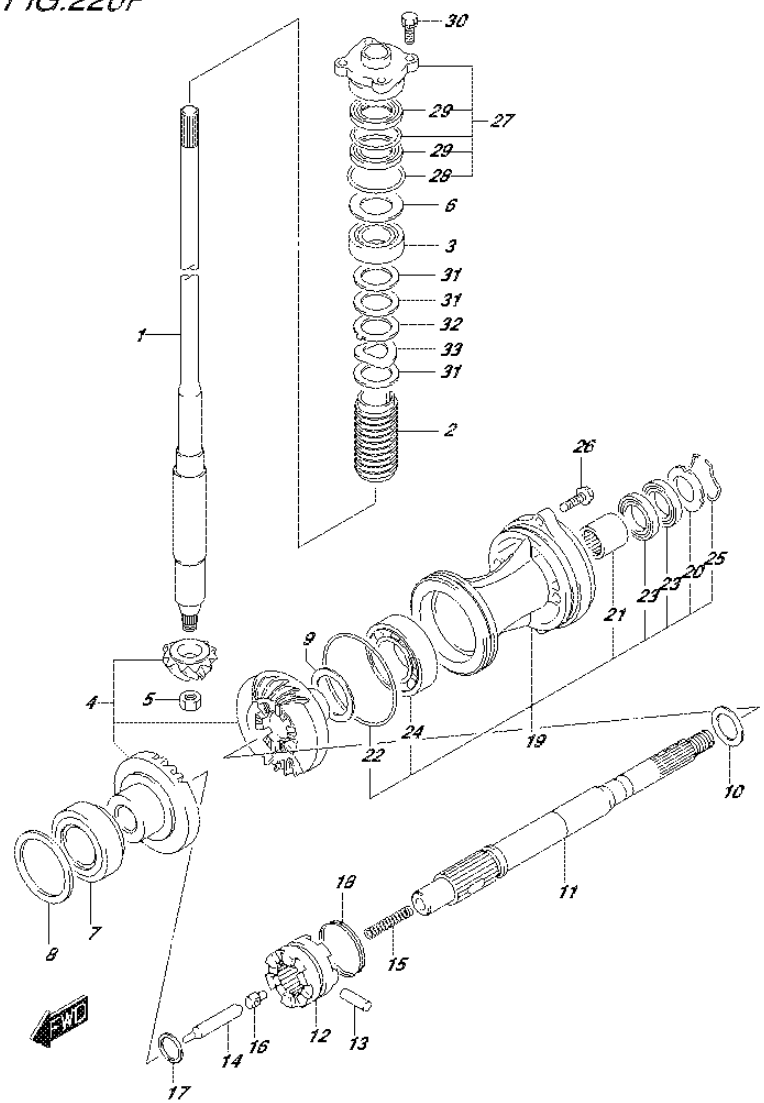

FIG.220P (2-F-7) TRANSMISSION (DF50AVTH E01)

REF NO.	PART NO.	DESCRIPTION	Q'TY	REMARKS
9-1	09181-45003	SHIM (T:1.00)	1	REVERSE GEAR
9-2	09181-45004	SHIM (T:1.10)	1	
9-3	09181-45005	SHIM (T:1.20)	1	
9-4	09181-45006	SHIM (T:1.30)	1	
9-5	09181-45007	SHIM (T:1.40)	1	
9-6	09181-45008	SHIM (T:1.50)	1	
9-7	09181-45009	SHIM (T:1.60)	1	
10-1	09181-28015	SHIM (T:0.90)	1	PROP SHAFT REVERSE THRUST
10-2	09181-28016	SHIM (T:1.00)	1	
10-3	09181-28017	SHIM (T:1.20)	1	
10-4	09181-28018	SHIM (T:1.30)	1	
10-5	09181-28019	SHIM (T:1.40)	1	
10-6	09181-28020	SHIM (T:1.60)	1	
11	57610-88L10	SHAFT ASSY, PROPELLER	1	
12	57621-88L00	SHIFTER, CLUTCH DOG	1	
13	09202-07002	PIN (7X48)	1	
14	57631-99E01	ROD, PUSH	1	
15	09440-11020	SPRING	1	
16	09209-12007	PIN	1	
17	09181-25030	SHIM (25X32X3)	1	
18	09440-49004	SPRING	1	
19	56120-90J02-0EP	HOUSING, PROP SFT BRG (BLACK)	1	
20	56123-90J00	.WASHER, OIL SEAL PROTECTOR	1	
21	09263-28047	.BEARING (28X37X30)	1	
22	09280-97001	.O RING (D:3.5,ID:95)	1	
23	09282-28002	.OIL SEAL (28X50X6)	2	
24	08113-62090	.BEARING	1	
25	09387-52001	.RING SET	1	
26	09116-08122	BOLT (8X30)	2	
27	56130-87E00	HOUSING	1	
28	09280-46004	.O RING (D:3.5,ID:45.7)	1	
29	09282-22007	.OIL SEAL (22X36X6)	2	
30	09117-08110	BOLT (8X25)	4	
31	09181-31001	SHIM (31X46X2)	3	
32	09169-31001	WASHER	1	
33	09164-31001	WASHER	1	

FIG.220R

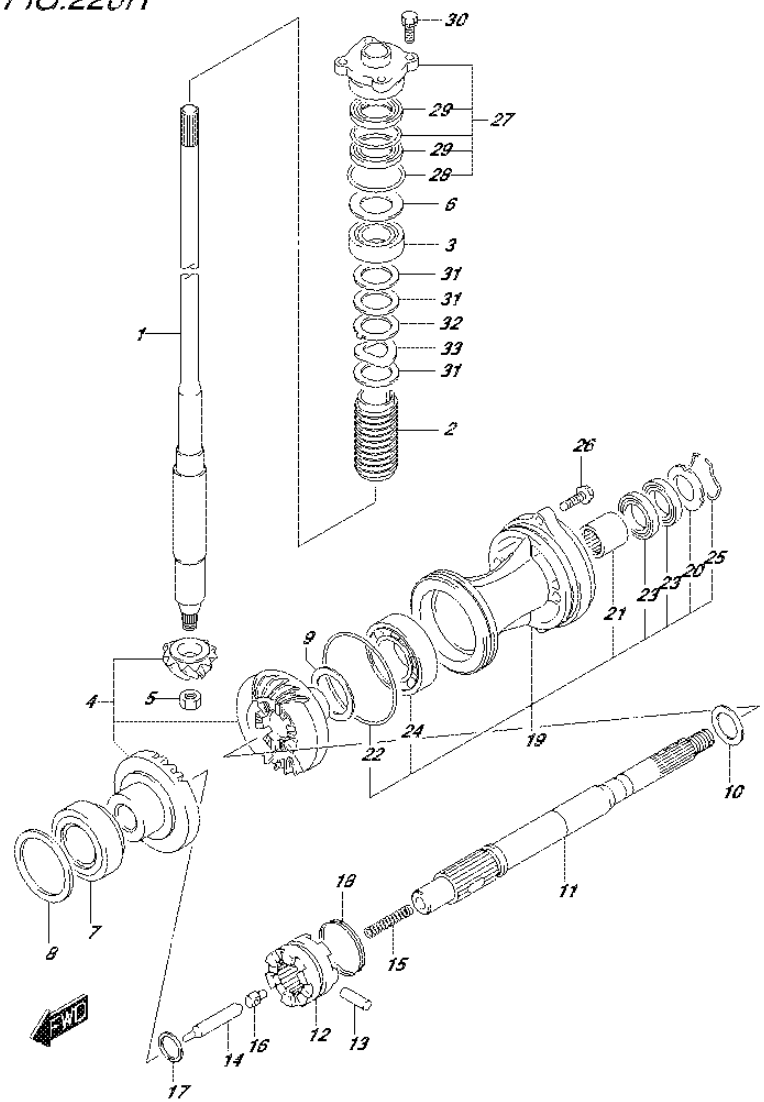

FIG.220R (2-F-8) TRANSMISSION (DF60AVT E01)

REF NO.	PART NO.	DESCRIPTION	Q'TY	REMARKS
1-1	57110-88L30	SHAFT ASSY, DRIVE (L)	1	W/TRANSOM(L)
1-2	57110-88L40	SHAFT ASSY, DRIVE (X)	1	W/TRANSOM(X)
2	57133-90J02	COLLAR, DRIVE SHAFT	1	
3	09265-25046	BEARING (25X52X19.25)	1	
4	57300-99824	PINION/GEAR SET	1	
5	09140-14024	NUT	1	
6-1	09181-40186	SHIM (T:0.50)	1	
6-2	09181-41002	SHIM (T:0.55)	1	
6-3	09181-41003	SHIM (T:0.60)	1	
6-4	09181-41004	SHIM (T:0.65)	1	
6-5	09181-41005	SHIM (T:0.70)	1	
6-6	09181-41006	SHIM (T:0.75)	1	
6-7	09181-40190	SHIM (T:0.80)	1	
6-8	09181-41008	SHIM (T:0.85)	1	
6-9	09181-41009	SHIM (T:0.90)	1	
6-10	09181-41010	SHIM (T:0.95)	1	
6-11	09181-40195	SHIM (T:1.00)	1	
6-12	09181-41012	SHIM (T:1.05)	1	
6-13	09181-41013	SHIM (T:1.10)	1	
6-14	09181-41014	SHIM (T:1.15)	1	
7	09265-50003	BEARING (50X85X26)	1	PART OF GEAR CASE
8-1	09181-50020	SHIM (T:0.45)	1	FORWARD GEAR
8-2	09181-50021	SHIM (T:0.50)	1	
8-3	09181-50022	SHIM (T:0.55)	1	
8-4	09181-50023	SHIM (T:0.60)	1	
8-5	09181-50024	SHIM (T:0.65)	1	
8-6	09181-50025	SHIM (T:0.70)	1	
8-7	09181-50026	SHIM (T:0.75)	1	
8-8	09181-50027	SHIM (T:0.80)	1	
8-9	09181-50028	SHIM (T:0.85)	1	
8-10	09181-50029	SHIM (T:0.95)	1	
9-1	09181-45003	SHIM (T:1.00)	1	REVERSE GEAR
9-2	09181-45004	SHIM (T:1.10)	1	
9-3	09181-45005	SHIM (T:1.20)	1	

FIG.220R

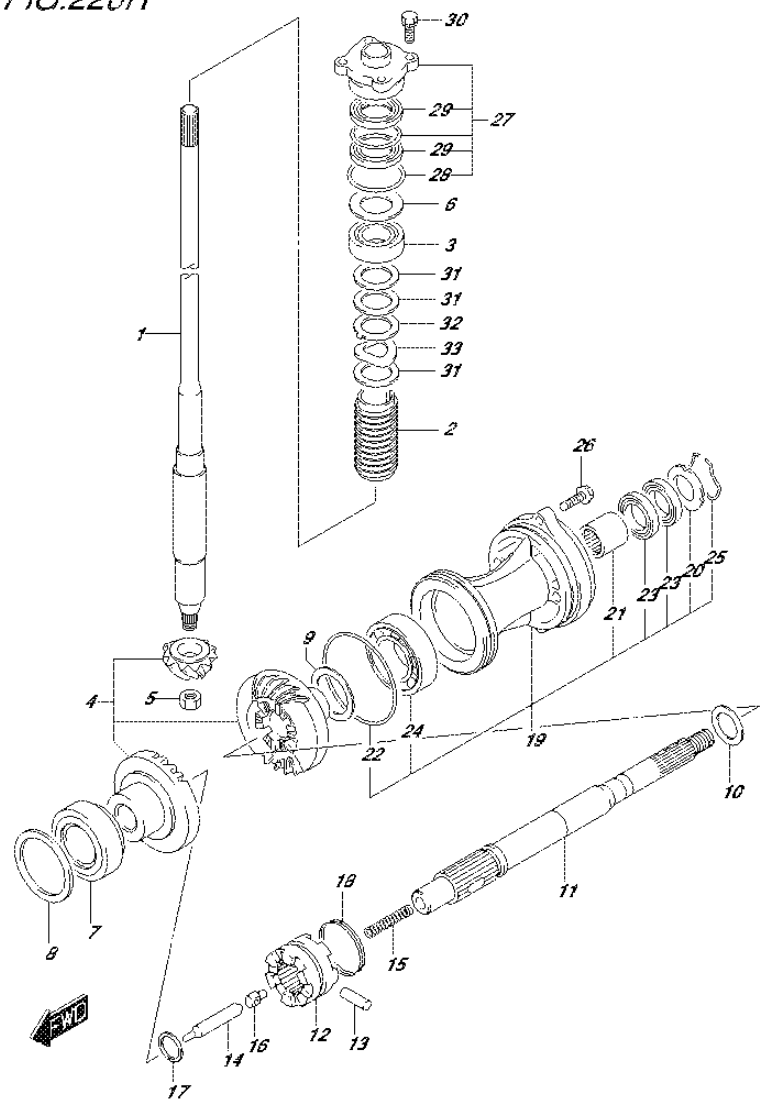

FIG.220R (2-F-9) TRANSMISSION (DF60AVT E01)

REF NO.	PART NO.	DESCRIPTION	Q'TY	REMARKS
9-4	09181-45006	SHIM (T:1.30)	1	
9-5	09181-45007	SHIM (T:1.40)	1	
9-6	09181-45008	SHIM (T:1.50)	1	
9-7	09181-45009	SHIM (T:1.60)	1	
10-1	09181-28015	SHIM (T:0.90)	1	PROP SHAFT REVERSE THRUST
10-2	09181-28016	SHIM (T:1.00)	1	
10-3	09181-28017	SHIM (T:1.20)	1	
10-4	09181-28018	SHIM (T:1.30)	1	
10-5	09181-28019	SHIM (T:1.40)	1	
10-6	09181-28020	SHIM (T:1.60)	1	
11	57610-88L10	SHAFT ASSY, PROPELLER	1	
12	57621-88L00	SHIFTER, CLUTCH DOG	1	
13	09202-07002	PIN (7X48)	1	
14	57631-99E01	ROD, PUSH	1	
15	09440-11020	SPRING	1	
16	09209-12007	PIN	1	
17	09181-25030	SHIM (25X32X3)	1	
18	09440-49004	SPRING	1	
19	56120-90J02-0EP	HOUSING, PROP SFT BRG (BLACK)	1	
20	56123-90J00	.WASHER, OIL SEAL PROTECTOR	1	
21	09263-28047	.BEARING (28X37X30)	1	
22	09280-97001	.O RING (D:3.5,ID:95)	1	
23	09282-28002	.OIL SEAL (28X50X6)	2	
24	08113-62090	.BEARING	1	
25	09387-52001	.RING SET	1	
26	09116-08122	BOLT (8X30)	2	
27	56130-87E00	HOUSING	1	
28	09280-46004	.O RING (D:3.5,ID:45.7)	1	
29	09282-22007	.OIL SEAL (22X36X6)	2	
30	09117-08110	BOLT (8X25)	4	
31	09181-31001	SHIM (31X46X2)	3	
32	09169-31001	WASHER	1	
33	09164-31001	WASHER	1	

FIG.220S

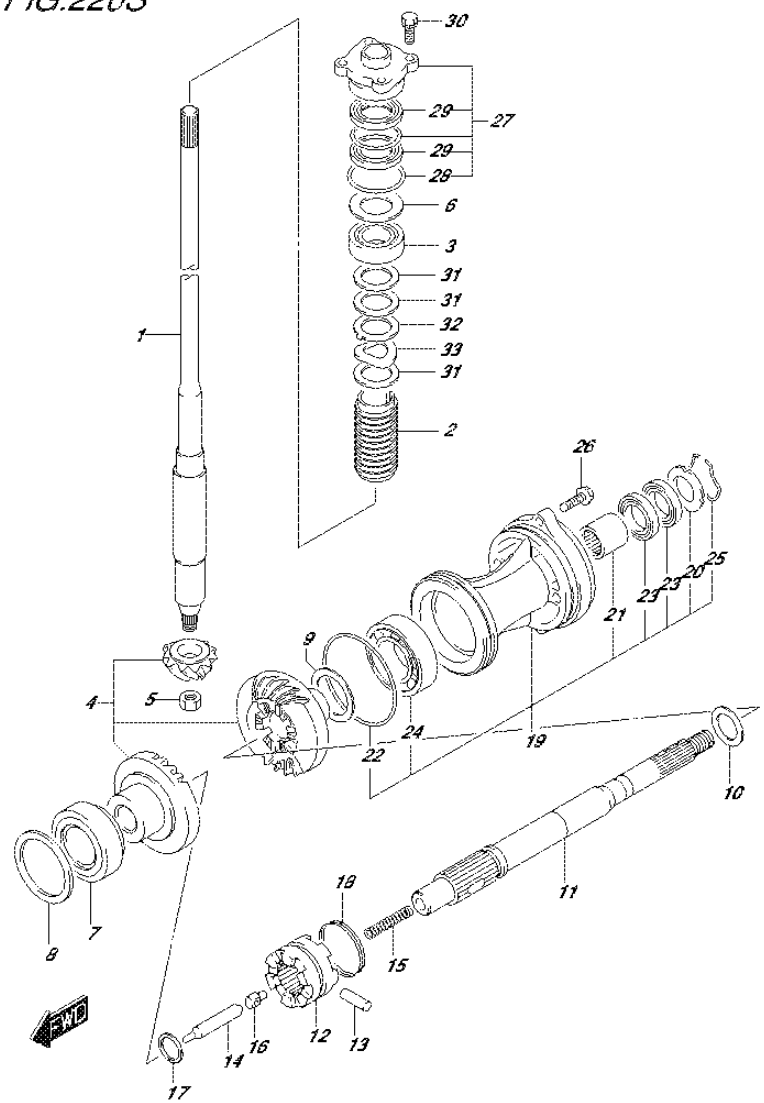

FIG.220S (2-F-10) TRANSMISSION (DF60AVT E40)

REF NO.	PART NO.	DESCRIPTION	Q'TY	REMARKS
1-1	57110-88L30	SHAFT ASSY, DRIVE (L)	1	W/TRANSOM(L)
1-2	57110-88L40	SHAFT ASSY, DRIVE (X)	1	W/TRANSOM(X)
2	57133-90J02	COLLAR, DRIVE SHAFT	1	
3	09265-25046	BEARING (25X52X19.25)	1	
4	57300-99824	PINION/GEAR SET	1	
5	09140-14024	NUT	1	
6-1	09181-40186	SHIM (T:0.50)	1	
6-2	09181-41002	SHIM (T:0.55)	1	
6-3	09181-41003	SHIM (T:0.60)	1	
6-4	09181-41004	SHIM (T:0.65)	1	
6-5	09181-41005	SHIM (T:0.70)	1	
6-6	09181-41006	SHIM (T:0.75)	1	
6-7	09181-40190	SHIM (T:0.80)	1	
6-8	09181-41008	SHIM (T:0.85)	1	
6-9	09181-41009	SHIM (T:0.90)	1	
6-10	09181-41010	SHIM (T:0.95)	1	
6-11	09181-40195	SHIM (T:1.00)	1	
6-12	09181-41012	SHIM (T:1.05)	1	
6-13	09181-41013	SHIM (T:1.10)	1	
6-14	09181-41014	SHIM (T:1.15)	1	
7	09265-50003	BEARING (50X85X26)	1	PART OF GEAR CASE
8-1	09181-50020	SHIM (T:0.45)	1	FORWARD GEAR
8-2	09181-50021	SHIM (T:0.50)	1	
8-3	09181-50022	SHIM (T:0.55)	1	
8-4	09181-50023	SHIM (T:0.60)	1	
8-5	09181-50024	SHIM (T:0.65)	1	
8-6	09181-50025	SHIM (T:0.70)	1	
8-7	09181-50026	SHIM (T:0.75)	1	
8-8	09181-50027	SHIM (T:0.80)	1	
8-9	09181-50028	SHIM (T:0.85)	1	
8-10	09181-50029	SHIM (T:0.95)	1	
9-1	09181-45003	SHIM (T:1.00)	1	REVERSE GEAR
9-2	09181-45004	SHIM (T:1.10)	1	
9-3	09181-45005	SHIM (T:1.20)	1	

FIG.220S

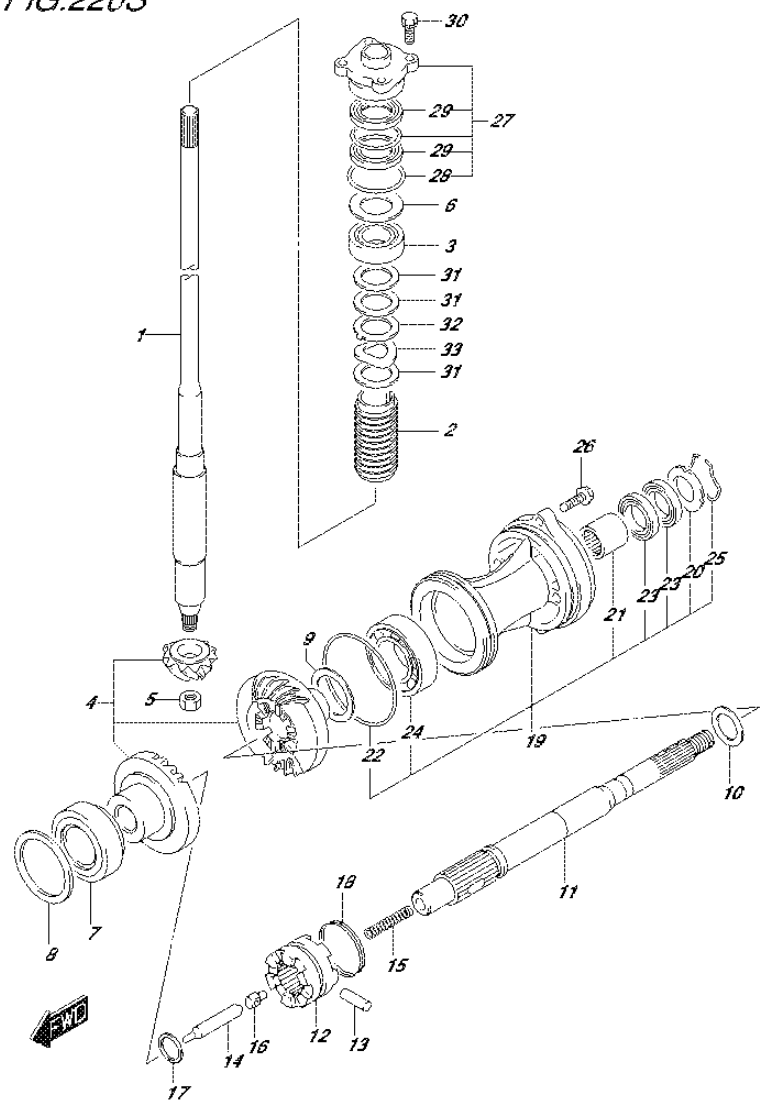

FIG.220S (2-F-11) TRANSMISSION (DF60AVT E40)

REF NO.	PART NO.	DESCRIPTION	Q'TY	REMARKS
9-4	09181-45006	SHIM (T:1.30)	1	
9-5	09181-45007	SHIM (T:1.40)	1	
9-6	09181-45008	SHIM (T:1.50)	1	
9-7	09181-45009	SHIM (T:1.60)	1	
10-1	09181-28015	SHIM (T:0.90)	1	PROP SHAFT REVERSE THRUST
10-2	09181-28016	SHIM (T:1.00)	1	
10-3	09181-28017	SHIM (T:1.20)	1	
10-4	09181-28018	SHIM (T:1.30)	1	
10-5	09181-28019	SHIM (T:1.40)	1	
10-6	09181-28020	SHIM (T:1.60)	1	
11	57610-88L10	SHAFT ASSY, PROPELLER	1	
12	57621-88L00	SHIFTER, CLUTCH DOG	1	
13	09202-07002	PIN (7X48)	1	
14	57631-99E01	ROD, PUSH	1	
15	09440-11020	SPRING	1	
16	09209-12007	PIN	1	
17	09181-25030	SHIM (25X32X3)	1	
18	09440-49004	SPRING	1	
19	56120-90J02-0EP	HOUSING, PROP SFT BRG (BLACK)	1	
20	56123-90J00	.WASHER, OIL SEAL PROTECTOR	1	
21	09263-28047	.BEARING (28X37X30)	1	
22	09280-97001	.O RING (D:3.5,ID:95)	1	
23	09282-28002	.OIL SEAL (28X50X6)	2	
24	08113-62090	.BEARING	1	
25	09387-52001	.RING SET	1	
26	09116-08122	BOLT (8X30)	2	
27	56130-87E00	HOUSING	1	
28	09280-46004	.O RING (D:3.5,ID:45.7)	1	
29	09282-22007	.OIL SEAL (22X36X6)	2	
30	09117-08110	BOLT (8X25)	4	
31	09181-31001	SHIM (31X46X2)	3	
32	09169-31001	WASHER	1	
33	09164-31001	WASHER	1	

FIG.220T

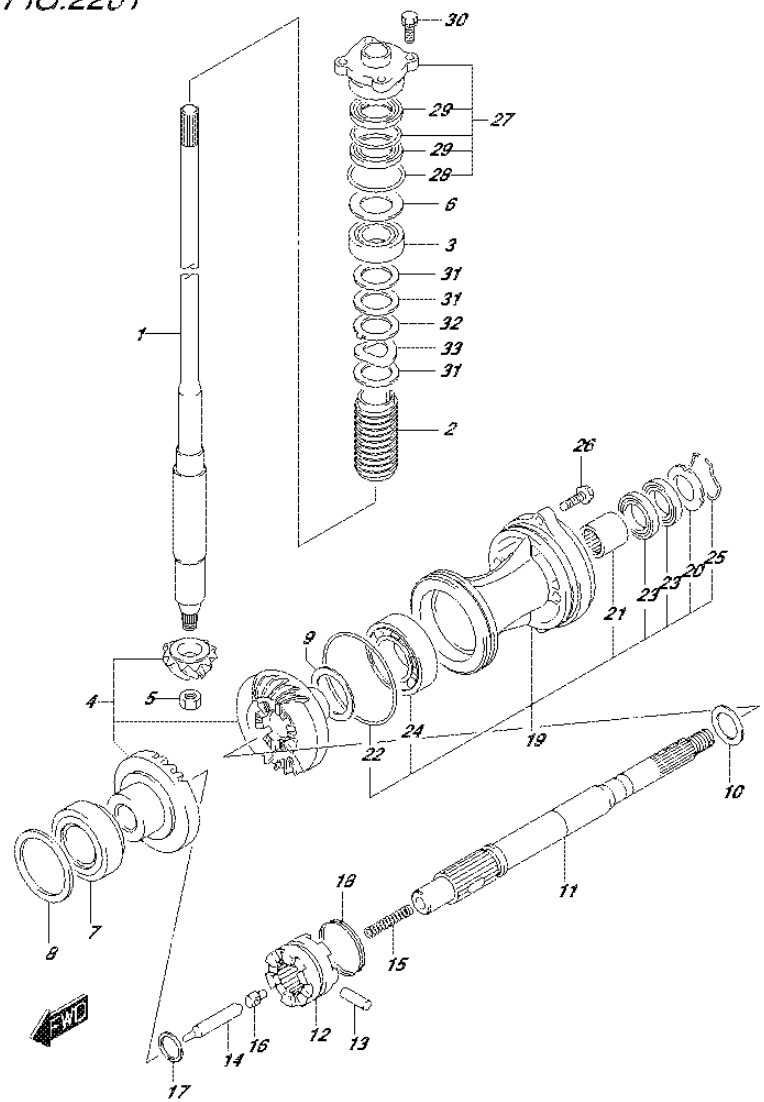

FIG.220T (2-F-12) TRANSMISSION (DF60AVTH E01)

REF NO.	PART NO.	DESCRIPTION	Q'TY	REMARKS
1-1	57110-88L30	SHAFT ASSY, DRIVE (L)	1	W/TRANSOM(L)
1-2	57110-88L40	SHAFT ASSY, DRIVE (X)	1	W/TRANSOM(X)
2	57133-90J02	COLLAR, DRIVE SHAFT	1	
3	09265-25046	BEARING (25X52X19.25)	1	
4	57300-99824	PINION/GEAR SET	1	
5	09140-14024	NUT	1	
6-1	09181-40186	SHIM (T:0.50)	1	
6-2	09181-41002	SHIM (T:0.55)	1	
6-3	09181-41003	SHIM (T:0.60)	1	
6-4	09181-41004	SHIM (T:0.65)	1	
6-5	09181-41005	SHIM (T:0.70)	1	
6-6	09181-41006	SHIM (T:0.75)	1	
6-7	09181-40190	SHIM (T:0.80)	1	
6-8	09181-41008	SHIM (T:0.85)	1	
6-9	09181-41009	SHIM (T:0.90)	1	
6-10	09181-41010	SHIM (T:0.95)	1	
6-11	09181-40195	SHIM (T:1.00)	1	
6-12	09181-41012	SHIM (T:1.05)	1	
6-13	09181-41013	SHIM (T:1.10)	1	
6-14	09181-41014	SHIM (T:1.15)	1	
7	09265-50003	BEARING (50X85X26)	1	PART OF GEAR CASE
8-1	09181-50020	SHIM (T:0.45)	1	FORWARD GEAR
8-2	09181-50021	SHIM (T:0.50)	1	
8-3	09181-50022	SHIM (T:0.55)	1	
8-4	09181-50023	SHIM (T:0.60)	1	
8-5	09181-50024	SHIM (T:0.65)	1	
8-6	09181-50025	SHIM (T:0.70)	1	
8-7	09181-50026	SHIM (T:0.75)	1	
8-8	09181-50027	SHIM (T:0.80)	1	
8-9	09181-50028	SHIM (T:0.85)	1	
8-10	09181-50029	SHIM (T:0.95)	1	
9-1	09181-45003	SHIM (T:1.00)	1	REVERSE GEAR
9-2	09181-45004	SHIM (T:1.10)	1	
9-3	09181-45005	SHIM (T:1.20)	1	

FIG.220T

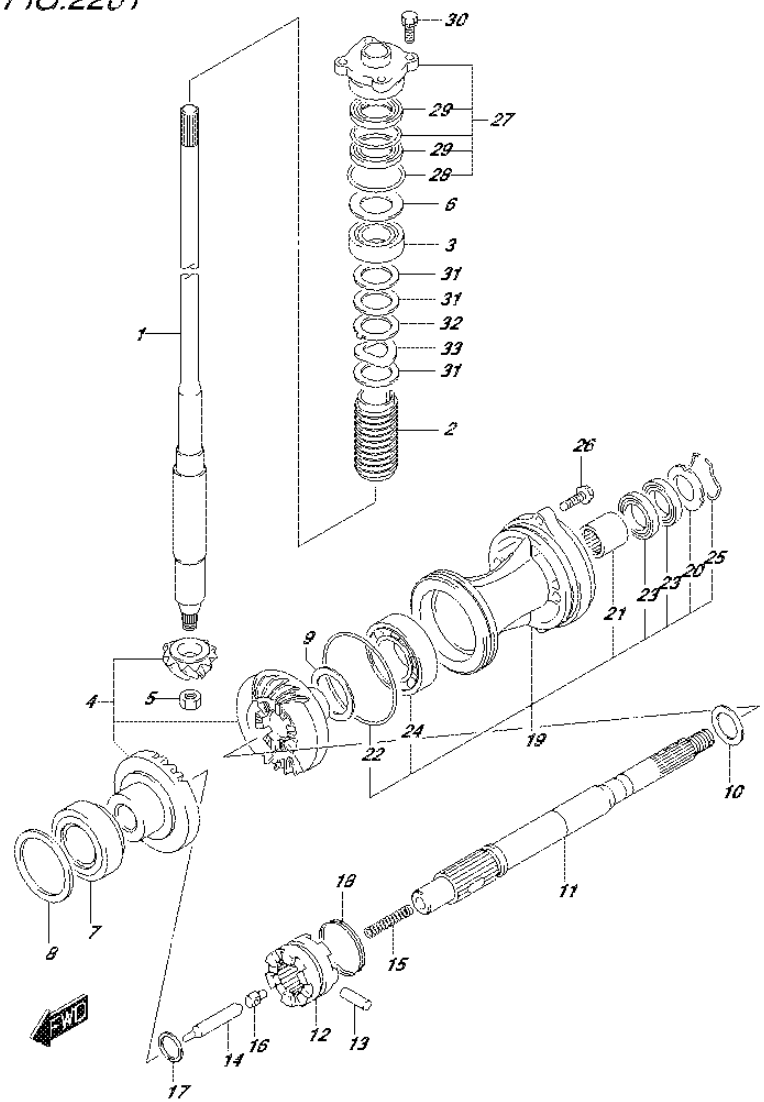

FIG.220T (2-F-13) TRANSMISSION (DF60AVTH E01)

REF NO.	PART NO.	DESCRIPTION	Q'TY	REMARKS
9-4	09181-45006	SHIM (T:1.30)	1	
9-5	09181-45007	SHIM (T:1.40)	1	
9-6	09181-45008	SHIM (T:1.50)	1	
9-7	09181-45009	SHIM (T:1.60)	1	
10-1	09181-28015	SHIM (T:0.90)	1	PROP SHAFT REVERSE THRUST
10-2	09181-28016	SHIM (T:1.00)	1	
10-3	09181-28017	SHIM (T:1.20)	1	
10-4	09181-28018	SHIM (T:1.30)	1	
10-5	09181-28019	SHIM (T:1.40)	1	
10-6	09181-28020	SHIM (T:1.60)	1	
11	57610-88L10	SHAFT ASSY, PROPELLER	1	
12	57621-88L00	SHIFTER, CLUTCH DOG	1	
13	09202-07002	PIN (7X48)	1	
14	57631-99E01	ROD, PUSH	1	
15	09440-11020	SPRING	1	
16	09209-12007	PIN	1	
17	09181-25030	SHIM (25X32X3)	1	
18	09440-49004	SPRING	1	
19	56120-90J02-0EP	HOUSING, PROP SFT BRG (BLACK)	1	
20	56123-90J00	.WASHER, OIL SEAL PROTECTOR	1	
21	09263-28047	.BEARING (28X37X30)	1	
22	09280-97001	.O RING (D:3.5,ID:95)	1	
23	09282-28002	.OIL SEAL (28X50X6)	2	
24	08113-62090	.BEARING	1	
25	09387-52001	.RING SET	1	
26	09116-08122	BOLT (8X30)	2	
27	56130-87E00	HOUSING	1	
28	09280-46004	.O RING (D:3.5,ID:45.7)	1	
29	09282-22007	.OIL SEAL (22X36X6)	2	
30	09117-08110	BOLT (8X25)	4	
31	09181-31001	SHIM (31X46X2)	3	
32	09169-31001	WASHER	1	
33	09164-31001	WASHER	1	

FIG.220U

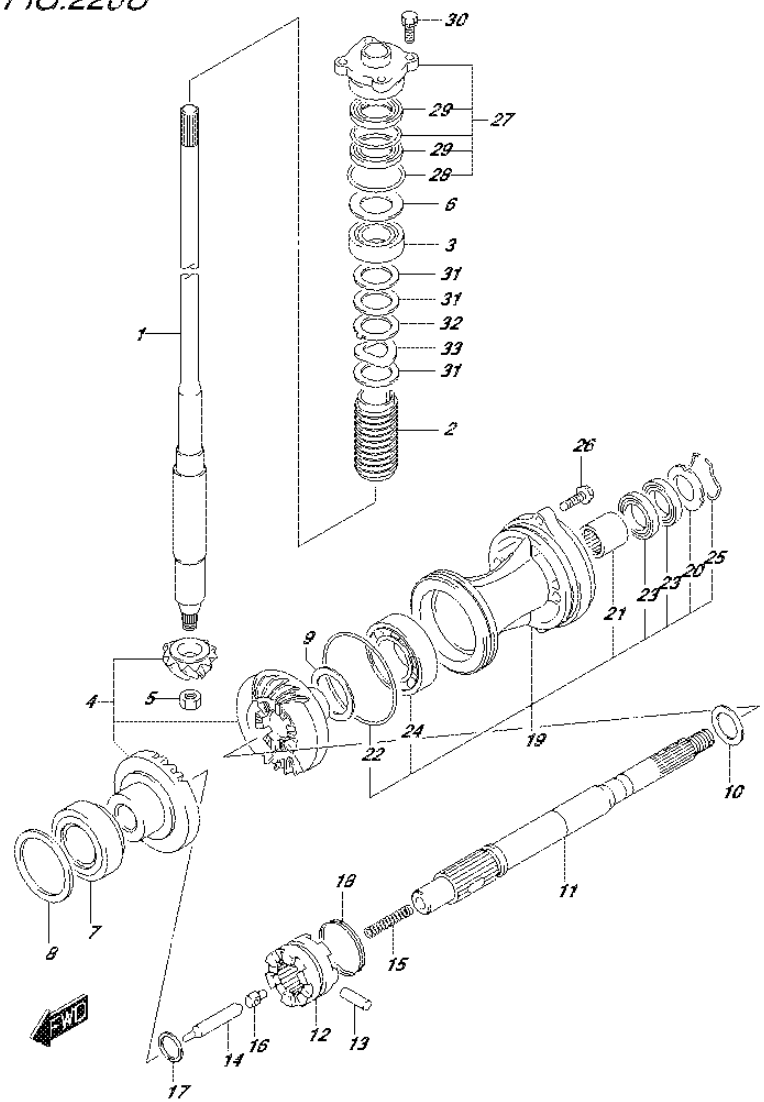

FIG.220U (2-F-14) TRANSMISSION (DF60AVTH E40)

REF NO.	PART NO.	DESCRIPTION	Q'TY	REMARKS
1-1	57110-88L30	SHAFT ASSY, DRIVE (L)	1	W/TRANSOM(L)
1-2	57110-88L40	SHAFT ASSY, DRIVE (X)	1	W/TRANSOM(X)
2	57133-90J02	COLLAR, DRIVE SHAFT	1	
3	09265-25046	BEARING (25X52X19.25)	1	
4	57300-99824	PINION/GEAR SET	1	
5	09140-14024	NUT	1	
6-1	09181-40186	SHIM (T:0.50)	1	
6-2	09181-41002	SHIM (T:0.55)	1	
6-3	09181-41003	SHIM (T:0.60)	1	
6-4	09181-41004	SHIM (T:0.65)	1	
6-5	09181-41005	SHIM (T:0.70)	1	
6-6	09181-41006	SHIM (T:0.75)	1	
6-7	09181-40190	SHIM (T:0.80)	1	
6-8	09181-41008	SHIM (T:0.85)	1	
6-9	09181-41009	SHIM (T:0.90)	1	
6-10	09181-41010	SHIM (T:0.95)	1	
6-11	09181-40195	SHIM (T:1.00)	1	
6-12	09181-41012	SHIM (T:1.05)	1	
6-13	09181-41013	SHIM (T:1.10)	1	
6-14	09181-41014	SHIM (T:1.15)	1	
7	09265-50003	BEARING (50X85X26)	1	PART OF GEAR CASE
8-1	09181-50020	SHIM (T:0.45)	1	FORWARD GEAR
8-2	09181-50021	SHIM (T:0.50)	1	
8-3	09181-50022	SHIM (T:0.55)	1	
8-4	09181-50023	SHIM (T:0.60)	1	
8-5	09181-50024	SHIM (T:0.65)	1	
8-6	09181-50025	SHIM (T:0.70)	1	
8-7	09181-50026	SHIM (T:0.75)	1	
8-8	09181-50027	SHIM (T:0.80)	1	
8-9	09181-50028	SHIM (T:0.85)	1	
8-10	09181-50029	SHIM (T:0.95)	1	
9-1	09181-45003	SHIM (T:1.00)	1	REVERSE GEAR
9-2	09181-45004	SHIM (T:1.10)	1	
9-3	09181-45005	SHIM (T:1.20)	1	

FIG.220U

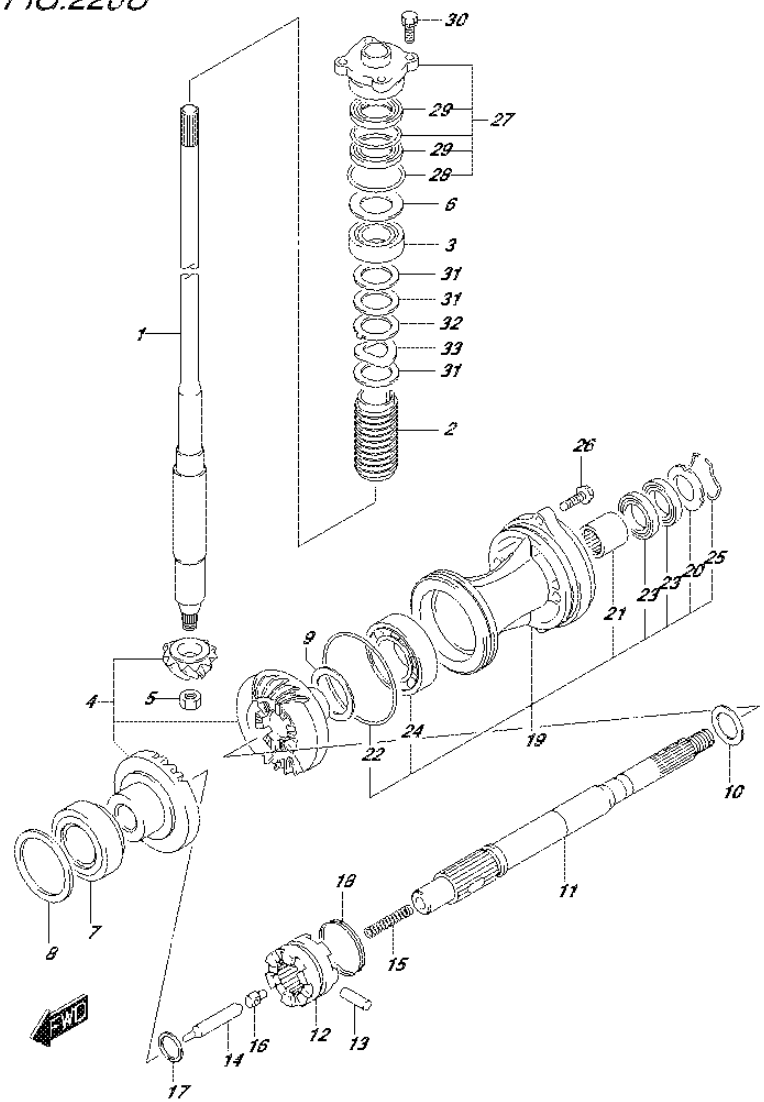

FIG.220U (2-F-15) TRANSMISSION (DF60AVTH E40)

REF NO.	PART NO.	DESCRIPTION	Q'TY	REMARKS
9-4	09181-45006	SHIM (T:1.30)	1	
9-5	09181-45007	SHIM (T:1.40)	1	
9-6	09181-45008	SHIM (T:1.50)	1	
9-7	09181-45009	SHIM (T:1.60)	1	
10-1	09181-28015	SHIM (T:0.90)	1	PROP SHAFT REVERSE THRUST
10-2	09181-28016	SHIM (T:1.00)	1	
10-3	09181-28017	SHIM (T:1.20)	1	
10-4	09181-28018	SHIM (T:1.30)	1	
10-5	09181-28019	SHIM (T:1.40)	1	
10-6	09181-28020	SHIM (T:1.60)	1	
11	57610-88L10	SHAFT ASSY, PROPELLER	1	
12	57621-88L00	SHIFTER, CLUTCH DOG	1	
13	09202-07002	PIN (7X48)	1	
14	57631-99E01	ROD, PUSH	1	
15	09440-11020	SPRING	1	
16	09209-12007	PIN	1	
17	09181-25030	SHIM (25X32X3)	1	
18	09440-49004	SPRING	1	
19	56120-90J02-0EP	HOUSING, PROP SFT BRG (BLACK)	1	
20	56123-90J00	.WASHER, OIL SEAL PROTECTOR	1	
21	09263-28047	.BEARING (28X37X30)	1	
22	09280-97001	.O RING (D:3.5,ID:95)	1	
23	09282-28002	.OIL SEAL (28X50X6)	2	
24	08113-62090	.BEARING	1	
25	09387-52001	.RING SET	1	
26	09116-08122	BOLT (8X30)	2	
27	56130-87E00	HOUSING	1	
28	09280-46004	.O RING (D:3.5,ID:45.7)	1	
29	09282-22007	.OIL SEAL (22X36X6)	2	
30	09117-08110	BOLT (8X25)	4	
31	09181-31001	SHIM (31X46X2)	3	
32	09169-31001	WASHER	1	
33	09164-31001	WASHER	1	

FIG.301A

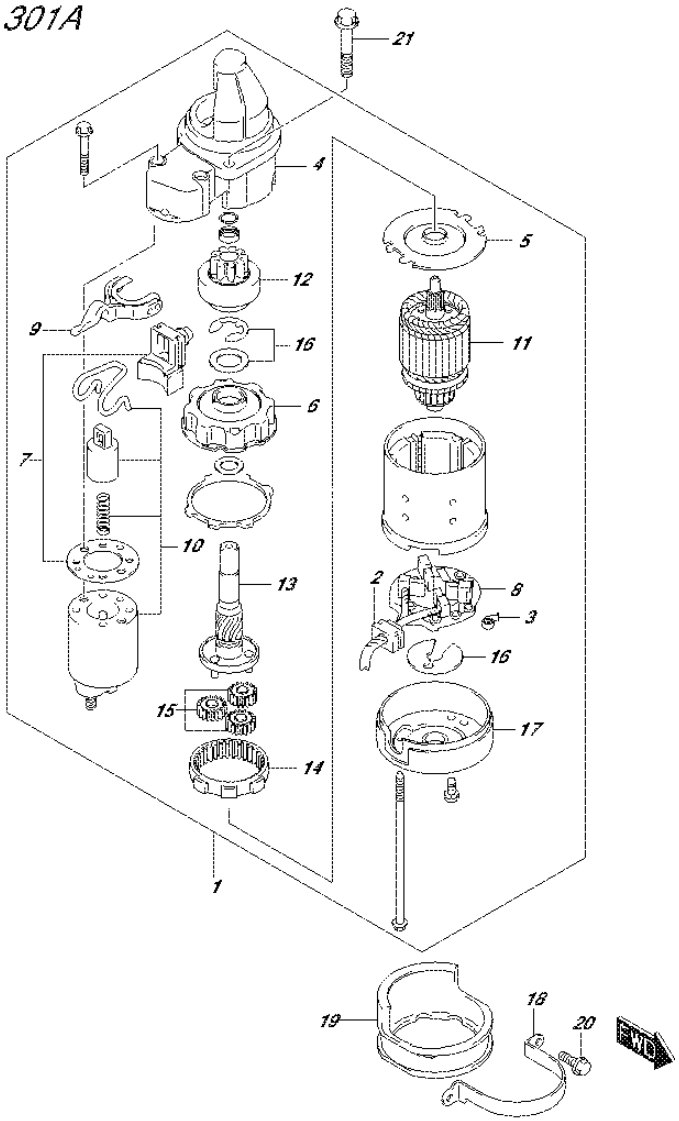

FIG.301A (2-G-2) STARTING MOTOR

REF NO.	PART NO.	DESCRIPTION	Q'TY	REMARKS
1	31100-94J22	STARTING MOTOR	1	
2	31131-94J00	.BRUSH SET, PLUS	1	
3	31135-90J00	.SPRING	4	
4	31151-94J01	.CASE, GEAR	1	
5	31152-90J00	.PLATE, CENTER	1	
6	31153-90J00	.BRACKET, PLANET GEAR	1	
7	31171-96J00	.COVER KIT, DUST	1	
8	31173-94J01	.HOLDER ASSY, BRUSH	1	
9	31191-96J00	.LEVER, SHIFT	1	
10	31220-94J00	.SWITCH, MAGNET	1	
11	31310-90J00	.ARMATURE	1	
12	31320-94J00	.PINION	1	
13	31341-94J00	.SHAFT, PINION	1	
14	31343-90J00	.INTERNAL GEAR	1	
15	31344-90J00	.GEAR, PLANETARY	3	
16	31360-93J01	.WASHER SET	1	
17	31170-94J00	.COVER ASSY, STARTER MOTER REAR	1	
18	31912-88L00	BAND, STARTER MOTOR	1	
19	31918-87L00	DAMPER, LOWER	1	
20	01550-06167	BOLT	2	LOWER
21	01550-08307	BOLT	2	UPPER

FIG.303A

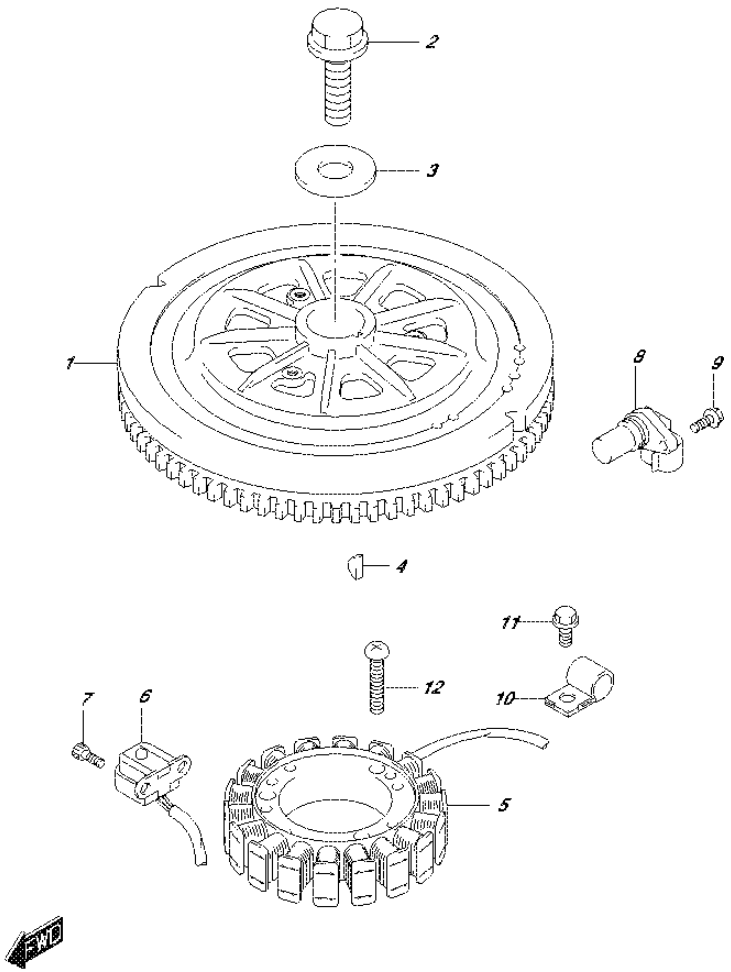

FIG.303A (2-G-3) MAGNETO

REF NO.	PART NO.	DESCRIPTION	Q'TY	REMARKS
1	32102-88L01	FLYWHEEL	1	
2	09103-14024	BOLT (14X50)	1	
3	09160-14065	WASHER (14.5X36X4.5)	1	
4	09420-04008	KEY	1	
5	32120-88L00	COIL, BATTERY CHARGING	1	
6	32160-88L00	COIL, IGNITION TIMING	1	
7	09106-05030	BOLT (5X10)	2	
8	33220-64L10	SENSOR ASSY, CAM POSITION	1	
9	01547-06167	BOLT	1	
10	09403-13408	CLAMP	1	
11	01550-06127	BOLT	1	
12	02112-06307	SCREW	3	

FIG.310A (2-G-4) RECTIFIER/IGNITION COIL

REF NO.	PART NO.	DESCRIPTION	Q'TY	REMARKS
1	32800-88L00	RECTIFIER/REGULATOR ASSY	1	
2	01550-06257	BOLT	2	
3	32890-88L00	HOLDER, ELECTRIC PARTS	1	
4	09116-06202	BOLT (6X25)	3	
5	09169-06062	WASHER	3	
6	09320-09016	CUSHION	3	
7	33410-87L00	COIL ASSY, IGNITION	3	
8	01547-06207	BOLT	3	

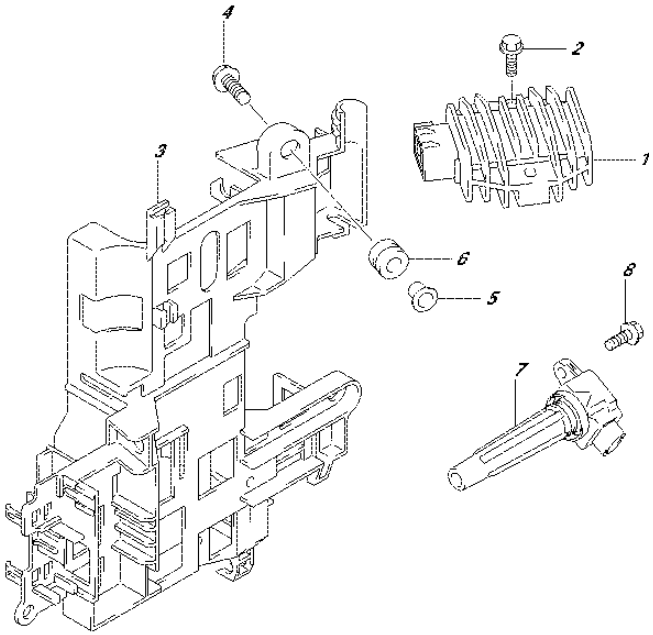

FIG.315A

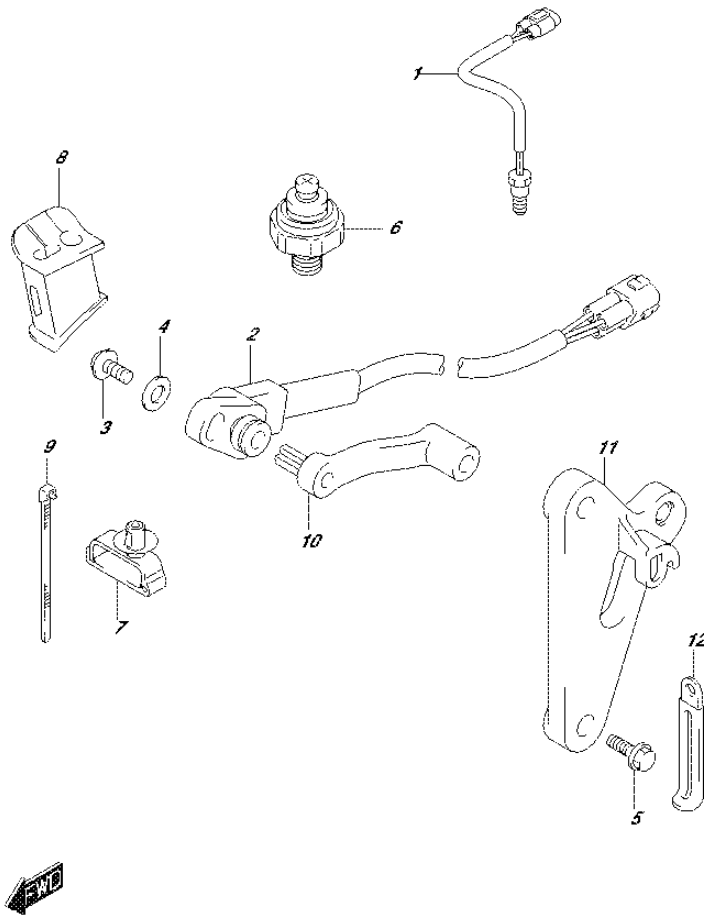

FIG.315A (2-G-5) SENSOR (DF40A E01)

REF NO.	PART NO.	DESCRIPTION	Q'TY	REMARKS
1	34830-87J20	SENSOR ASSY, CYLINDER TEMP	1	
2	34840-98J03	SENSOR ASSY, TRIM	1	
3	09125-05048	SCREW (5X16)	1	
4	09160-05029	WASHER (5.5X12X0.8)	1	
5	09103-06093	BOLT (6X20)	2	
6	37820-99E01	SWITCH, OIL PRESSURE	1	
7	09403-07340	CLAMP	1	
8	36656-88L00	GROMMET, PTT CABLE	1	
9	09407-14407	CLAMP (L:145)	3	
10	34841-88L00	LEVER, TRIM SENSOR	1	
11	34845-88L01	BRACKET, TRIM SENSOR	1	
12	29404-93J10	CLAMP, PTT CABLE	1	

FIG.315B (2-G-6) SENSOR (DF40AQH E01)

REF NO.	PART NO.	DESCRIPTION	Q'TY	REMARKS
1	34830-87J20	SENSOR ASSY, CYLINDER TEMP	1	
2	37820-99E01	SWITCH, OIL PRESSURE	1	
3	36656-88L10	GROMMET, PTT CABLE	1	

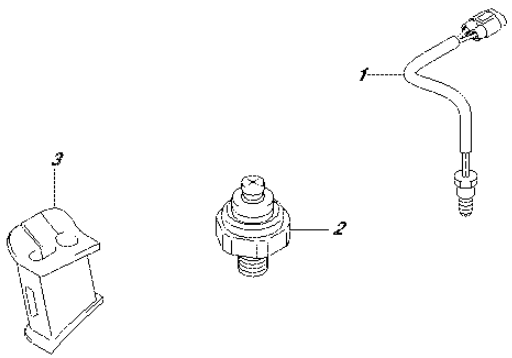

FIG.315C

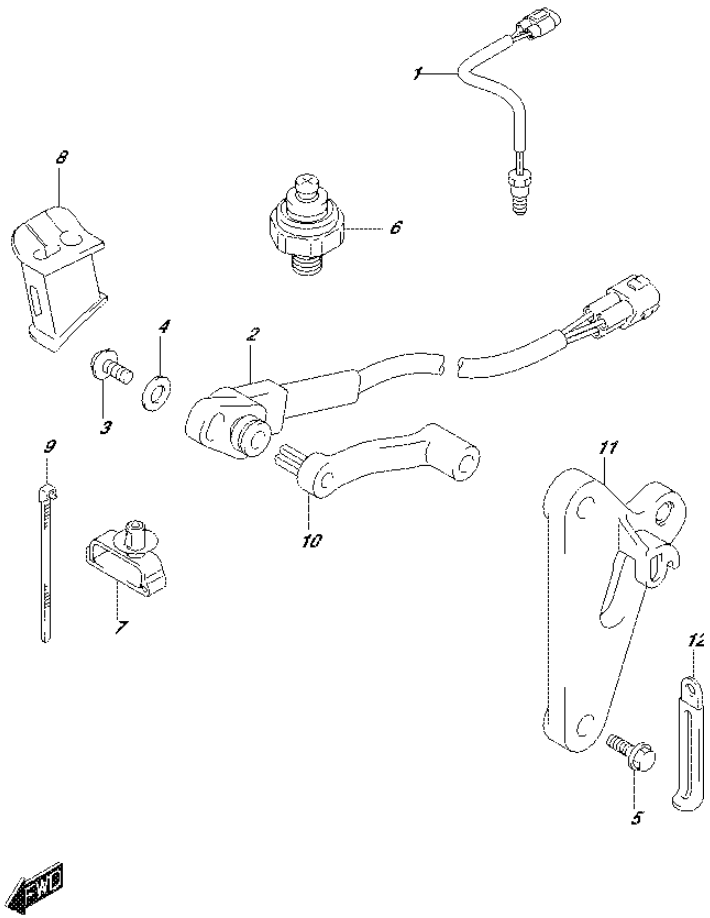

FIG.315C (2-G-7) SENSOR (DF40ATH E01)

REF NO.	PART NO.	DESCRIPTION	Q'TY	REMARKS
1	34830-87J20	SENSOR ASSY, CYLINDER TEMP	1	
2	34840-98J03	SENSOR ASSY, TRIM	1	
3	09125-05048	SCREW (5X16)	1	
4	09160-05029	WASHER (5.5X12X0.8)	1	
5	09103-06093	BOLT (6X20)	2	
6	37820-99E01	SWITCH, OIL PRESSURE	1	
7	09403-07340	CLAMP	1	
8	36656-88L00	GROMMET, PTT CABLE	1	
9	09407-14407	CLAMP (L:145)	3	
10	34841-88L00	LEVER, TRIM SENSOR	1	
11	34845-88L01	BRACKET, TRIM SENSOR	1	
12	29404-93J10	CLAMP, PTT CABLE	1	

FIG.315D

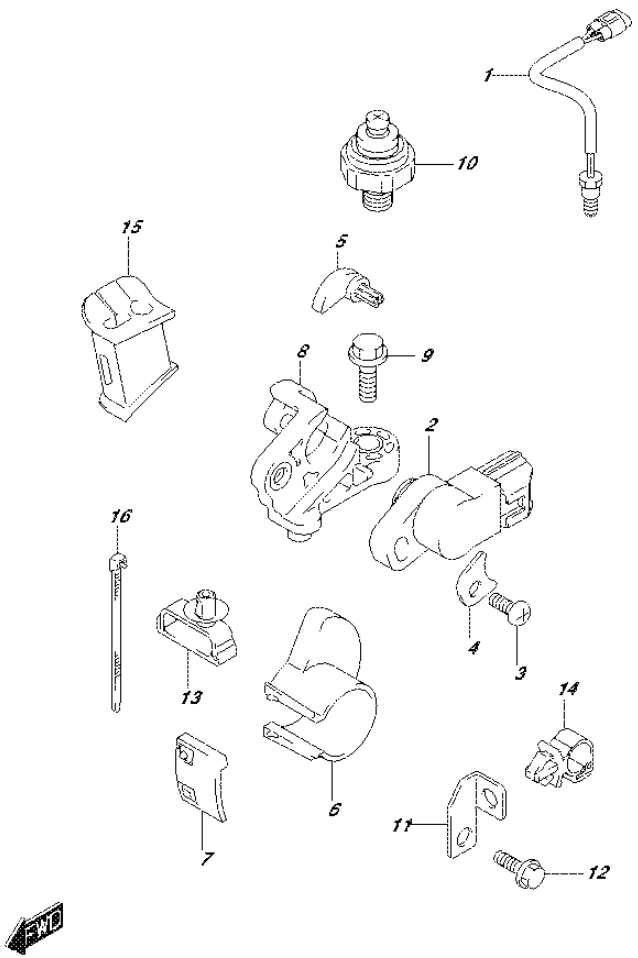

FIG.315D (2-G-8) SENSOR (DF40AST E34)

REF NO.	PART NO.	DESCRIPTION	Q'TY	REMARKS
1	34830-87J20	SENSOR ASSY, CYLINDER TEMP	1	
2	34840-98J11	SENSOR ASSY, TRIM	1	
3	09125-05046	SCREW (5X12)	1	
4	34846-87L00	WASHER, TRIM SENSOR	1	
5	34841-87L10	LEVER, TRIM SENSOR	1	
6	34842-88L10	CAM, TRIM SENSOR UPPER	1	
7	34843-87L00	CAM, TRIM SENSOR LOWER	1	
8	34845-88L10	BRACKET, TRIM SENSOR	1	
9	09103-06093	BOLT (6X20)	1	
10	37820-99E01	SWITCH, OIL PRESSURE	1	
11	36617-88L00	BRACKET, PTT CABLE CLAMP	1	
12	29103-93J00	BOLT, PTT CABLE CLAMP BRACKET	1	
13	09403-07340	CLAMP	1	
14	09403-11321	CLAMP	1	
15	36656-88L00	GROMMET, PTT CABLE	1	
16	09407-14407	CLAMP (L:145)	2	

FIG.315E

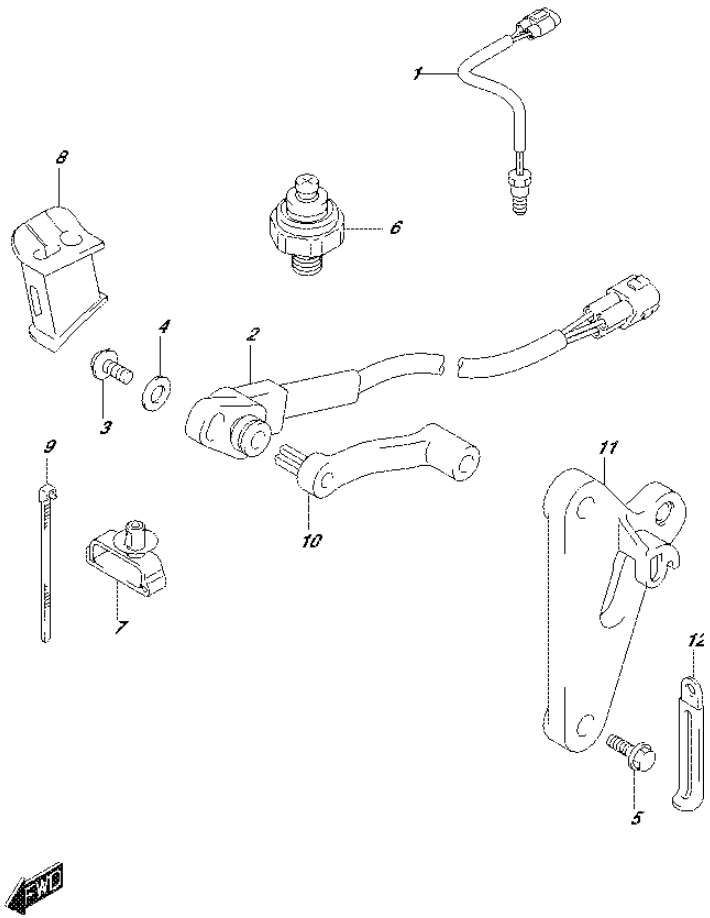

FIG.315E (2-G-9) SENSOR (DF50A E01)

REF NO.	PART NO.	DESCRIPTION	Q'TY	REMARKS
1	34830-87J20	SENSOR ASSY, CYLINDER TEMP	1	
2	34840-98J03	SENSOR ASSY, TRIM	1	
3	09125-05048	SCREW (5X16)	1	
4	09160-05029	WASHER (5.5X12X0.8)	1	
5	09103-06093	BOLT (6X20)	2	
6	37820-99E01	SWITCH, OIL PRESSURE	1	
7	09403-07340	CLAMP	1	
8	36656-88L00	GROMMET, PTT CABLE	1	
9	09407-14407	CLAMP (L:145)	3	
10	34841-88L00	LEVER, TRIM SENSOR	1	
11	34845-88L01	BRACKET, TRIM SENSOR	1	
12	29404-93J10	CLAMP, PTT CABLE	1	

FIG.315F

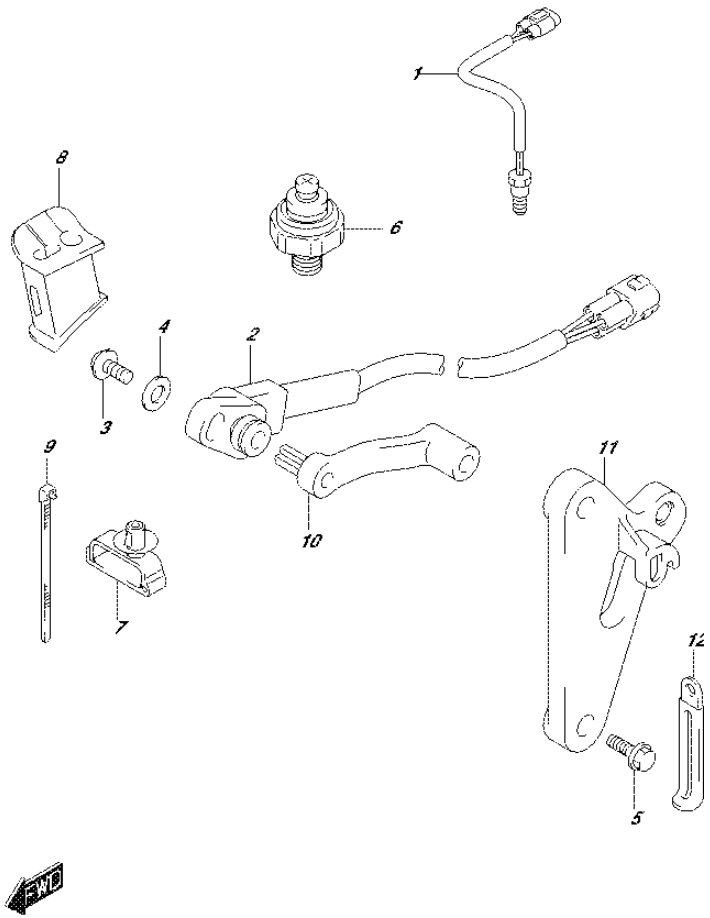

FIG.315F (2-G-10) SENSOR (DF50ATH E01)

REF NO.	PART NO.	DESCRIPTION	Q'TY	REMARKS
1	34830-87J20	SENSOR ASSY, CYLINDER TEMP	1	
2	34840-98J03	SENSOR ASSY, TRIM	1	
3	09125-05048	SCREW (5X16)	1	
4	09160-05029	WASHER (5.5X12X0.8)	1	
5	09103-06093	BOLT (6X20)	2	
6	37820-99E01	SWITCH, OIL PRESSURE	1	
7	09403-07340	CLAMP	1	
8	36656-88L00	GROMMET, PTT CABLE	1	
9	09407-14407	CLAMP (L:145)	3	
10	34841-88L00	LEVER, TRIM SENSOR	1	
11	34845-88L01	BRACKET, TRIM SENSOR	1	
12	29404-93J10	CLAMP, PTT CABLE	1	

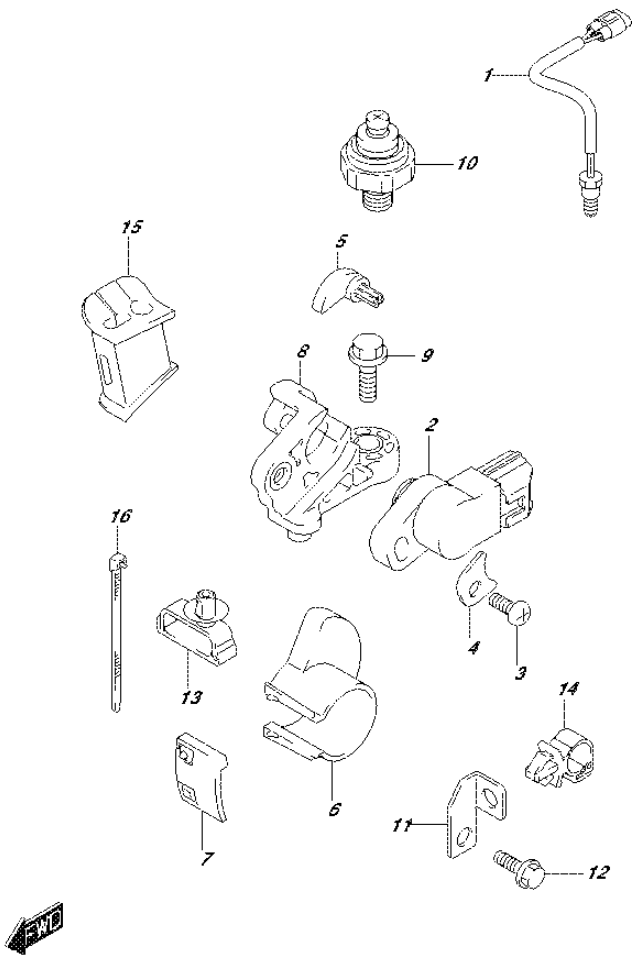

FIG.315G (2-G-11) SENSOR (DF60A E01)

REF NO.	PART NO.	DESCRIPTION	Q'TY	REMARKS
1	34830-87J20	SENSOR ASSY, CYLINDER TEMP	1	
2	34840-98J11	SENSOR ASSY, TRIM	1	
3	09125-05046	SCREW (5X12)	1	
4	34846-87L00	WASHER, TRIM SENSOR	1	
5	34841-87L10	LEVER, TRIM SENSOR	1	
6	34842-88L10	CAM, TRIM SENSOR UPPER	1	
7	34843-87L00	CAM, TRIM SENSOR LOWER	1	
8	34845-88L10	BRACKET, TRIM SENSOR	1	
9	09103-06093	BOLT (6X20)	1	
10	37820-99E01	SWITCH, OIL PRESSURE	1	
11	36617-88L00	BRACKET, PTT CABLE CLAMP	1	
12	29103-93J00	BOLT, PTT CABLE CLAMP BRACKET	1	
13	09403-07340	CLAMP	1	
14	09403-11321	CLAMP	1	
15	36656-88L00	GROMMET, PTT CABLE	1	
16	09407-14407	CLAMP (L:145)	2	

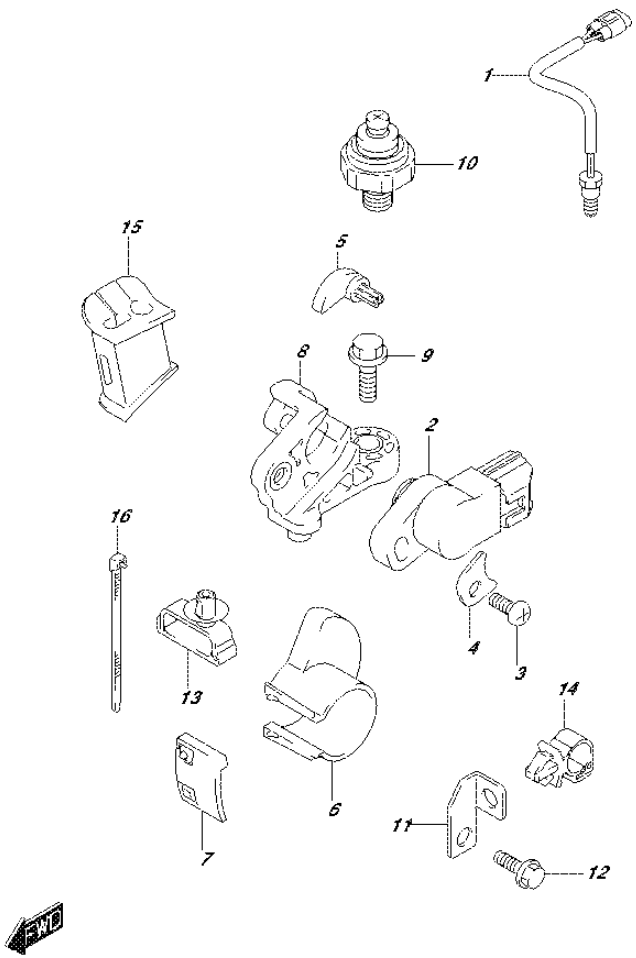

FIG.315H (2-G-12) SENSOR (DF60A E40)

REF NO.	PART NO.	DESCRIPTION	Q'TY	REMARKS
1	34830-87J20	SENSOR ASSY, CYLINDER TEMP	1	
2	34840-98J11	SENSOR ASSY, TRIM	1	
3	09125-05046	SCREW (5X12)	1	
4	34846-87L00	WASHER, TRIM SENSOR	1	
5	34841-87L10	LEVER, TRIM SENSOR	1	
6	34842-88L10	CAM, TRIM SENSOR UPPER	1	
7	34843-87L00	CAM, TRIM SENSOR LOWER	1	
8	34845-88L10	BRACKET, TRIM SENSOR	1	
9	09103-06093	BOLT (6X20)	1	
10	37820-99E01	SWITCH, OIL PRESSURE	1	
11	36617-88L00	BRACKET, PTT CABLE CLAMP	1	
12	29103-93J00	BOLT, PTT CABLE CLAMP BRACKET	1	
13	09403-07340	CLAMP	1	
14	09403-11321	CLAMP	1	
15	36656-88L00	GROMMET, PTT CABLE	1	
16	09407-14407	CLAMP (L:145)	2	

FIG.315J (2-G-13) SENSOR (DF60AQH E01)

REF NO.	PART NO.	DESCRIPTION	Q'TY	REMARKS
1	34830-87J20	SENSOR ASSY, CYLINDER TEMP	1	
2	37820-99E01	SWITCH, OIL PRESSURE	1	
3	36656-88L10	GROMMET, PTT CABLE	1	

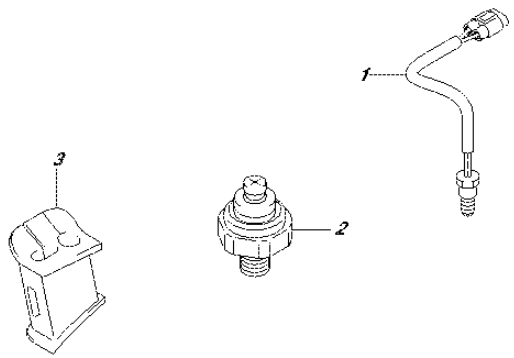

FIG.315K (2-G-14) SENSOR (DF60AQH E40)

REF NO.	PART NO.	DESCRIPTION	Q'TY	REMARKS
1	34830-87J20	SENSOR ASSY, CYLINDER TEMP	1	
2	37820-99E01	SWITCH, OIL PRESSURE	1	
3	36656-88L10	GROMMET, PTT CABLE	1	

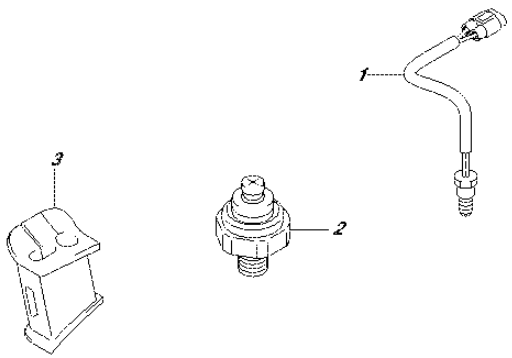

FIG.315L

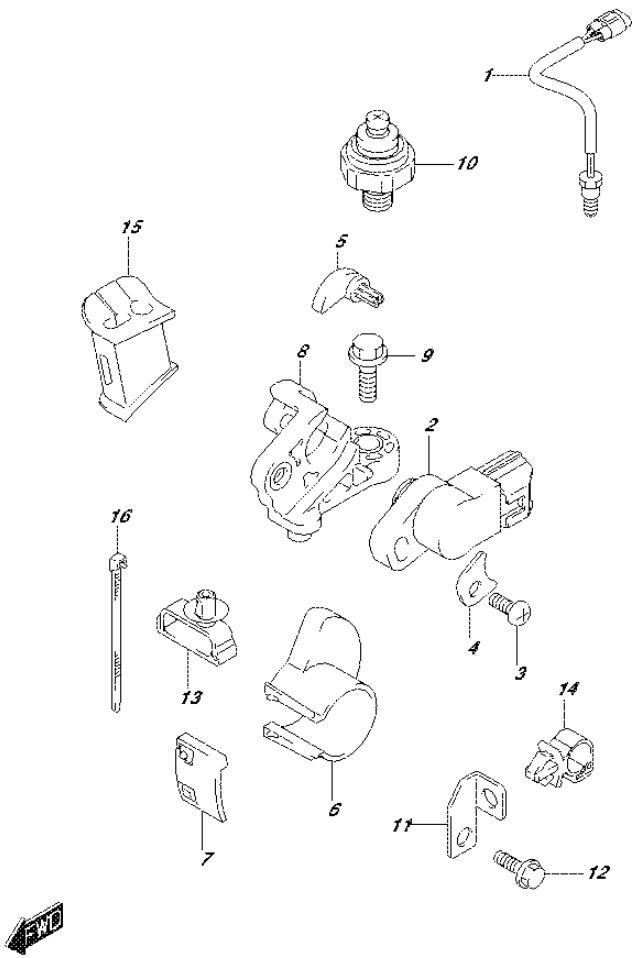

FIG.315L (2-G-15) SENSOR (DF60ATH E01)

REF NO.	PART NO.	DESCRIPTION	Q'TY	REMARKS
1	34830-87J20	SENSOR ASSY, CYLINDER TEMP	1	
2	34840-98J11	SENSOR ASSY, TRIM	1	
3	09125-05046	SCREW (5X12)	1	
4	34846-87L00	WASHER, TRIM SENSOR	1	
5	34841-87L10	LEVER, TRIM SENSOR	1	
6	34842-88L10	CAM, TRIM SENSOR UPPER	1	
7	34843-87L00	CAM, TRIM SENSOR LOWER	1	
8	34845-88L10	BRACKET, TRIM SENSOR	1	
9	09103-06093	BOLT (6X20)	1	
10	37820-99E01	SWITCH, OIL PRESSURE	1	
11	36617-88L00	BRACKET, PTT CABLE CLAMP	1	
12	29103-93J00	BOLT, PTT CABLE CLAMP BRACKET	1	
13	09403-07340	CLAMP	1	
14	09403-11321	CLAMP	1	
15	36656-88L00	GROMMET, PTT CABLE	1	
16	09407-14407	CLAMP (L:145)	2	

FIG.315M

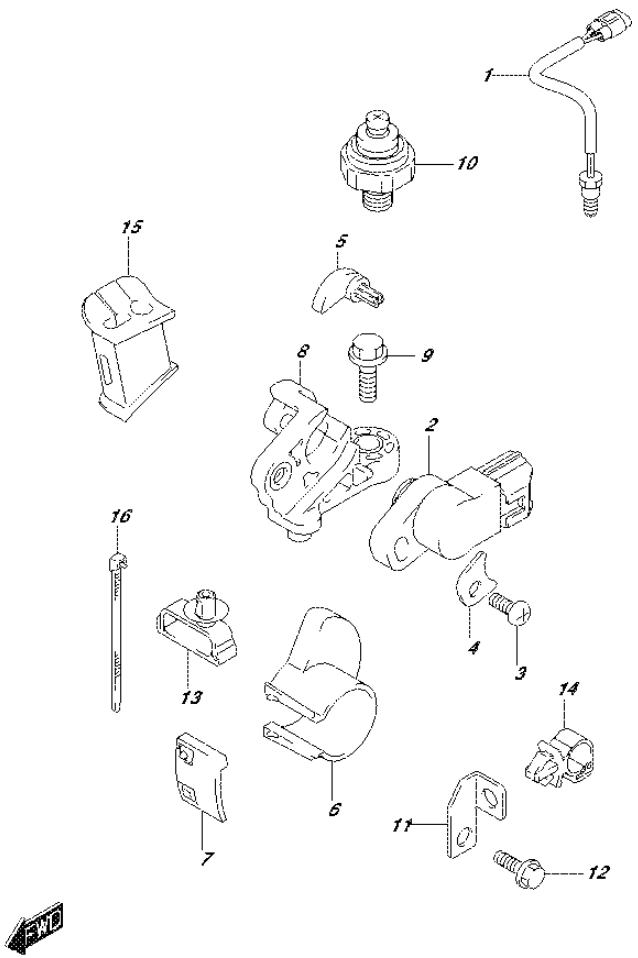

FIG.315M (2-H-2) SENSOR (DF60ATH E40)

REF NO.	PART NO.	DESCRIPTION	Q'TY	REMARKS
1	34830-87J20	SENSOR ASSY, CYLINDER TEMP	1	
2	34840-98J11	SENSOR ASSY, TRIM	1	
3	09125-05046	SCREW (5X12)	1	
4	34846-87L00	WASHER, TRIM SENSOR	1	
5	34841-87L10	LEVER, TRIM SENSOR	1	
6	34842-88L10	CAM, TRIM SENSOR UPPER	1	
7	34843-87L00	CAM, TRIM SENSOR LOWER	1	
8	34845-88L10	BRACKET, TRIM SENSOR	1	
9	09103-06093	BOLT (6X20)	1	
10	37820-99E01	SWITCH, OIL PRESSURE	1	
11	36617-88L00	BRACKET, PTT CABLE CLAMP	1	
12	29103-93J00	BOLT, PTT CABLE CLAMP BRACKET	1	
13	09403-07340	CLAMP	1	
14	09403-11321	CLAMP	1	
15	36656-88L00	GROMMET, PTT CABLE	1	
16	09407-14407	CLAMP (L:145)	2	

FIG.315N

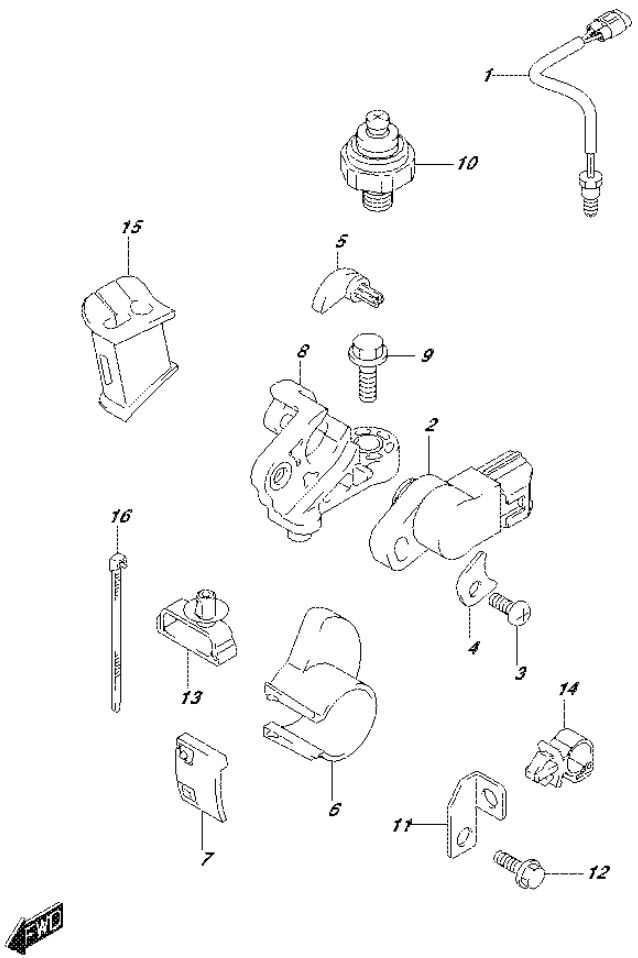

FIG.315N (2-H-3) SENSOR (DF50AVT E01)

REF NO.	PART NO.	DESCRIPTION	Q'TY	REMARKS
1	34830-87J20	SENSOR ASSY, CYLINDER TEMP	1	
2	34840-98J11	SENSOR ASSY, TRIM	1	
3	09125-05046	SCREW (5X12)	1	
4	34846-87L00	WASHER, TRIM SENSOR	1	
5	34841-87L10	LEVER, TRIM SENSOR	1	
6	34842-88L10	CAM, TRIM SENSOR UPPER	1	
7	34843-87L00	CAM, TRIM SENSOR LOWER	1	
8	34845-88L10	BRACKET, TRIM SENSOR	1	
9	09103-06093	BOLT (6X20)	1	
10	37820-99E01	SWITCH, OIL PRESSURE	1	
11	36617-88L00	BRACKET, PTT CABLE CLAMP	1	
12	29103-93J00	BOLT, PTT CABLE CLAMP BRACKET	1	
13	09403-07340	CLAMP	1	
14	09403-11321	CLAMP	1	
15	36656-88L00	GROMMET, PTT CABLE	1	
16	09407-14407	CLAMP (L:145)	2	

FIG.315P

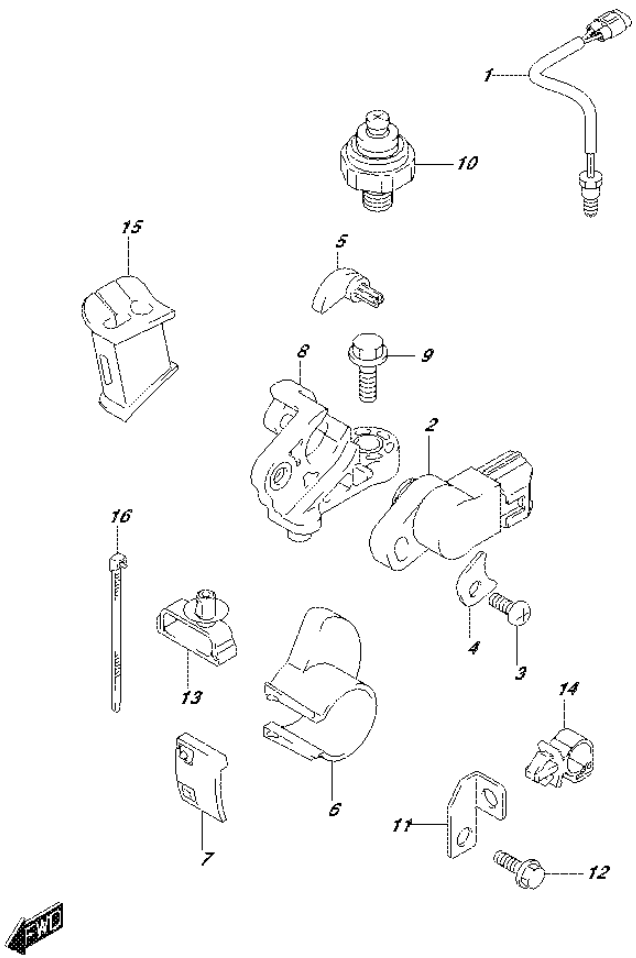

FIG.315P (2-H-4) SENSOR (DF50AVTH E01)

REF NO.	PART NO.	DESCRIPTION	Q'TY	REMARKS
1	34830-87J20	SENSOR ASSY, CYLINDER TEMP	1	
2	34840-98J11	SENSOR ASSY, TRIM	1	
3	09125-05046	SCREW (5X12)	1	
4	34846-87L00	WASHER, TRIM SENSOR	1	
5	34841-87L10	LEVER, TRIM SENSOR	1	
6	34842-88L10	CAM, TRIM SENSOR UPPER	1	
7	34843-87L00	CAM, TRIM SENSOR LOWER	1	
8	34845-88L10	BRACKET, TRIM SENSOR	1	
9	09103-06093	BOLT (6X20)	1	
10	37820-99E01	SWITCH, OIL PRESSURE	1	
11	36617-88L00	BRACKET, PTT CABLE CLAMP	1	
12	29103-93J00	BOLT, PTT CABLE CLAMP BRACKET	1	
13	09403-07340	CLAMP	1	
14	09403-11321	CLAMP	1	
15	36656-88L00	GROMMET, PTT CABLE	1	
16	09407-14407	CLAMP (L:145)	2	

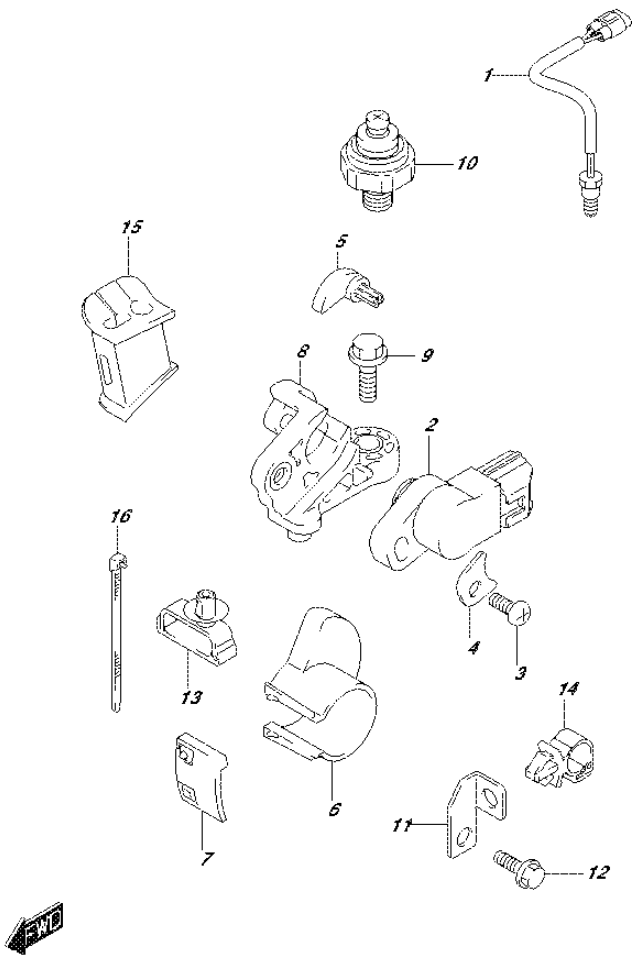

FIG.315R (2-H-5) SENSOR (DF60AVT E01)

REF NO.	PART NO.	DESCRIPTION	Q'TY	REMARKS
1	34830-87J20	SENSOR ASSY, CYLINDER TEMP	1	
2	34840-98J11	SENSOR ASSY, TRIM	1	
3	09125-05046	SCREW (5X12)	1	
4	34846-87L00	WASHER, TRIM SENSOR	1	
5	34841-87L10	LEVER, TRIM SENSOR	1	
6	34842-88L10	CAM, TRIM SENSOR UPPER	1	
7	34843-87L00	CAM, TRIM SENSOR LOWER	1	
8	34845-88L10	BRACKET, TRIM SENSOR	1	
9	09103-06093	BOLT (6X20)	1	
10	37820-99E01	SWITCH, OIL PRESSURE	1	
11	36617-88L00	BRACKET, PTT CABLE CLAMP	1	
12	29103-93J00	BOLT, PTT CABLE CLAMP BRACKET	1	
13	09403-07340	CLAMP	1	
14	09403-11321	CLAMP	1	
15	36656-88L00	GROMMET, PTT CABLE	1	
16	09407-14407	CLAMP (L:145)	2	

FIG.315S

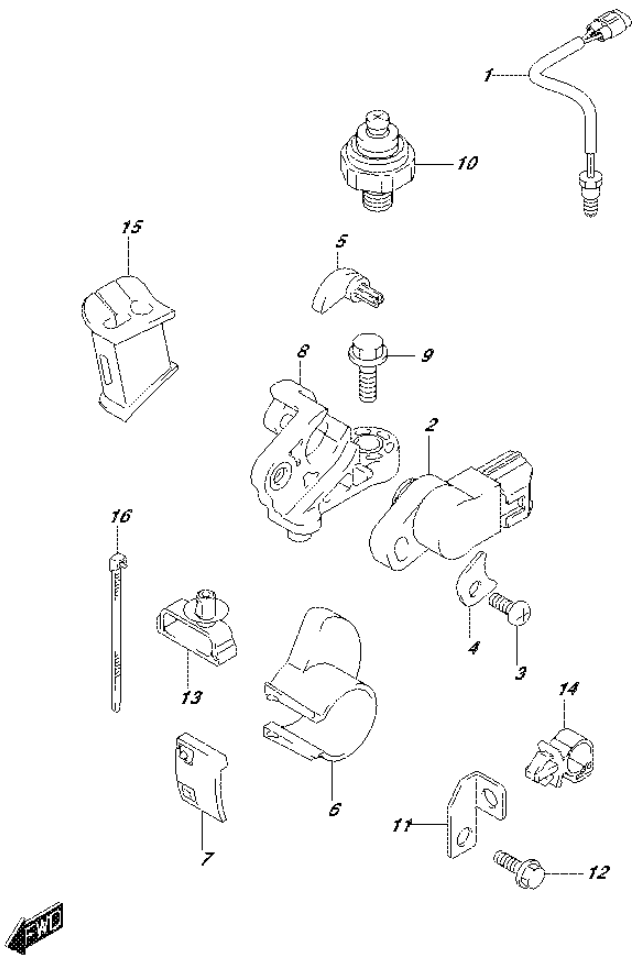

FIG.315S (2-H-6) SENSOR (DF60AVT E40)

REF NO.	PART NO.	DESCRIPTION	Q'TY	REMARKS
1	34830-87J20	SENSOR ASSY, CYLINDER TEMP	1	
2	34840-98J11	SENSOR ASSY, TRIM	1	
3	09125-05046	SCREW (5X12)	1	
4	34846-87L00	WASHER, TRIM SENSOR	1	
5	34841-87L10	LEVER, TRIM SENSOR	1	
6	34842-88L10	CAM, TRIM SENSOR UPPER	1	
7	34843-87L00	CAM, TRIM SENSOR LOWER	1	
8	34845-88L10	BRACKET, TRIM SENSOR	1	
9	09103-06093	BOLT (6X20)	1	
10	37820-99E01	SWITCH, OIL PRESSURE	1	
11	36617-88L00	BRACKET, PTT CABLE CLAMP	1	
12	29103-93J00	BOLT, PTT CABLE CLAMP BRACKET	1	
13	09403-07340	CLAMP	1	
14	09403-11321	CLAMP	1	
15	36656-88L00	GROMMET, PTT CABLE	1	
16	09407-14407	CLAMP (L:145)	2	

FIG.315T

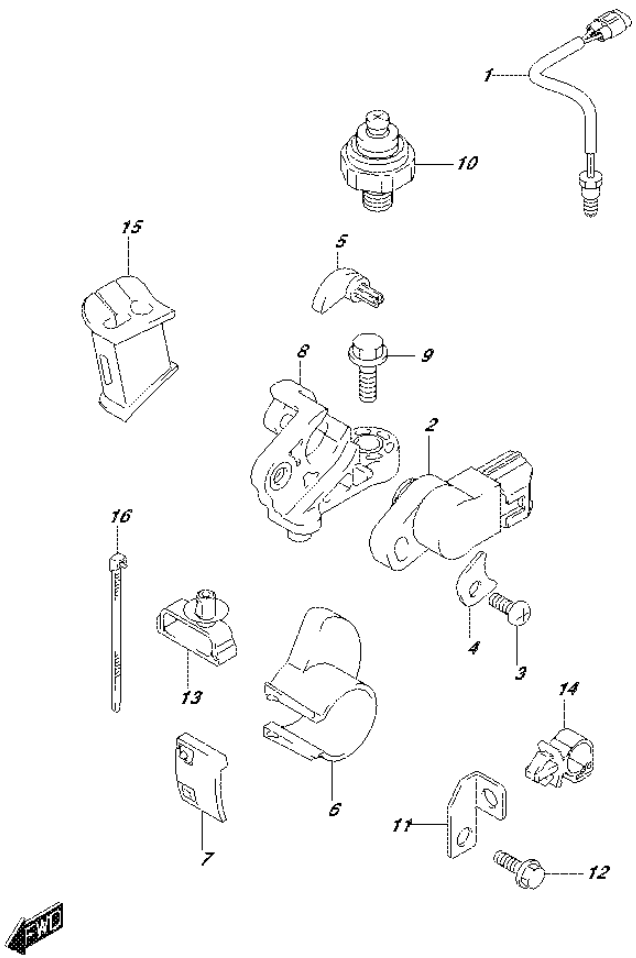

FIG.315T (2-H-7) SENSOR (DF60AVTH E01)

REF NO.	PART NO.	DESCRIPTION	Q'TY	REMARKS
1	34830-87J20	SENSOR ASSY, CYLINDER TEMP	1	
2	34840-98J11	SENSOR ASSY, TRIM	1	
3	09125-05046	SCREW (5X12)	1	
4	34846-87L00	WASHER, TRIM SENSOR	1	
5	34841-87L10	LEVER, TRIM SENSOR	1	
6	34842-88L10	CAM, TRIM SENSOR UPPER	1	
7	34843-87L00	CAM, TRIM SENSOR LOWER	1	
8	34845-88L10	BRACKET, TRIM SENSOR	1	
9	09103-06093	BOLT (6X20)	1	
10	37820-99E01	SWITCH, OIL PRESSURE	1	
11	36617-88L00	BRACKET, PTT CABLE CLAMP	1	
12	29103-93J00	BOLT, PTT CABLE CLAMP BRACKET	1	
13	09403-07340	CLAMP	1	
14	09403-11321	CLAMP	1	
15	36656-88L00	GROMMET, PTT CABLE	1	
16	09407-14407	CLAMP (L:145)	2	

FIG.315U

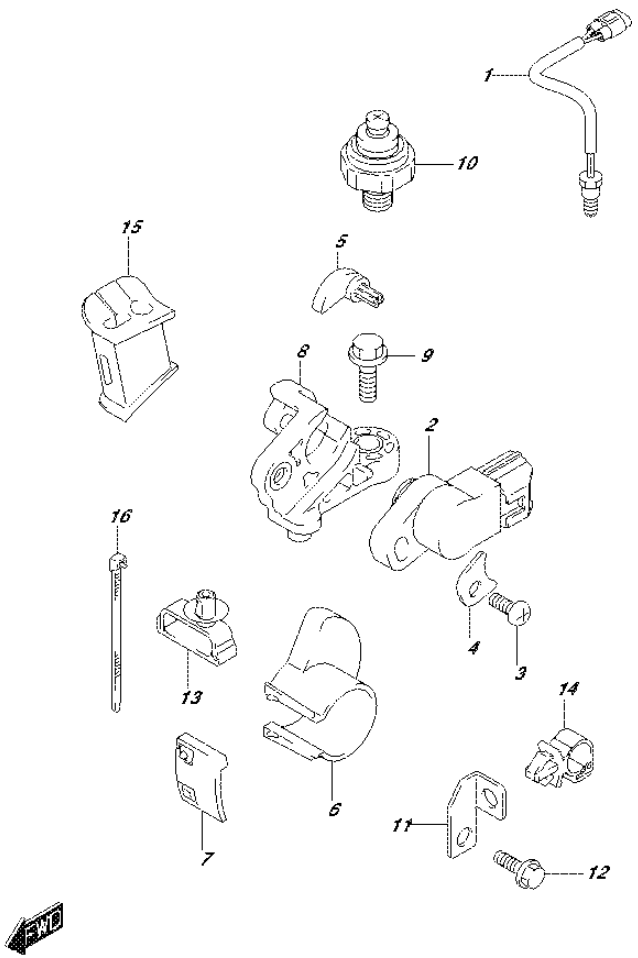

FIG.315U (2-H-8) SENSOR (DF60AVTH E40)

REF NO.	PART NO.	DESCRIPTION	Q'TY	REMARKS
1	34830-87J20	SENSOR ASSY, CYLINDER TEMP	1	
2	34840-98J11	SENSOR ASSY, TRIM	1	
3	09125-05046	SCREW (5X12)	1	
4	34846-87L00	WASHER, TRIM SENSOR	1	
5	34841-87L10	LEVER, TRIM SENSOR	1	
6	34842-88L10	CAM, TRIM SENSOR UPPER	1	
7	34843-87L00	CAM, TRIM SENSOR LOWER	1	
8	34845-88L10	BRACKET, TRIM SENSOR	1	
9	09103-06093	BOLT (6X20)	1	
10	37820-99E01	SWITCH, OIL PRESSURE	1	
11	36617-88L00	BRACKET, PTT CABLE CLAMP	1	
12	29103-93J00	BOLT, PTT CABLE CLAMP BRACKET	1	
13	09403-07340	CLAMP	1	
14	09403-11321	CLAMP	1	
15	36656-88L00	GROMMET, PTT CABLE	1	
16	09407-14407	CLAMP (L:145)	2	

FIG.322A

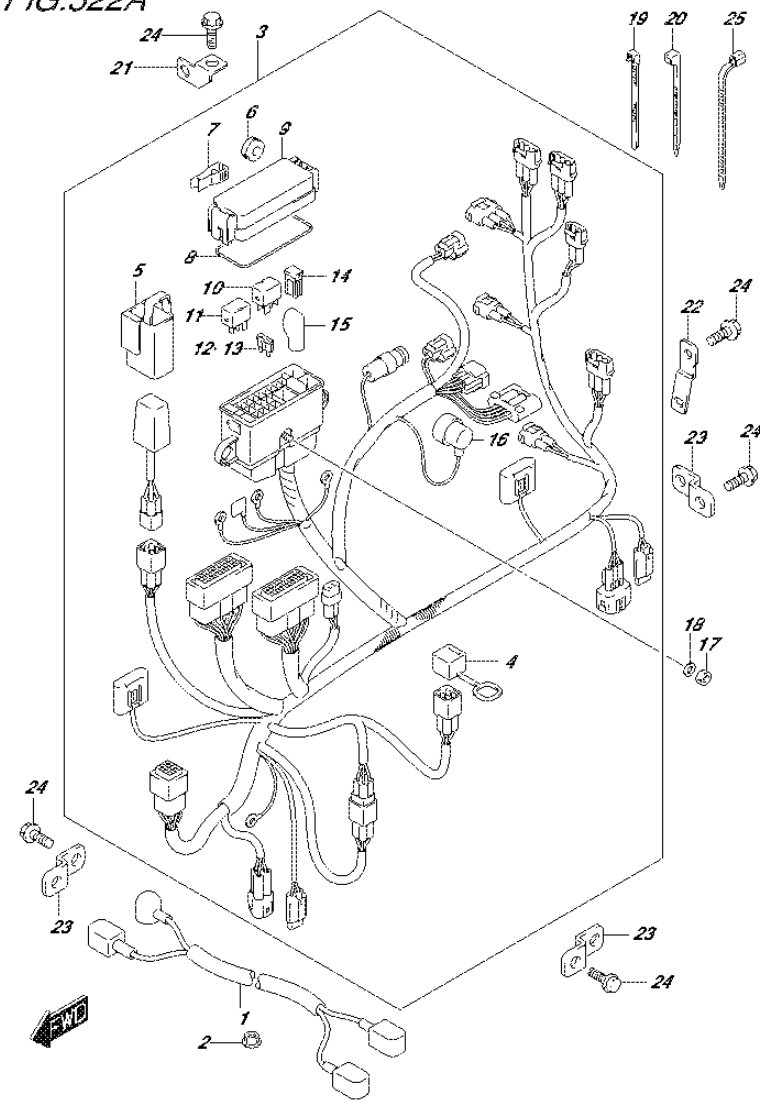

FIG.322A (2-H-9) HARNESS (DF40A E01)

REF NO.	PART NO.	DESCRIPTION	Q'TY	REMARKS
1	33810-88L10	CABLE ASSY, STARTER MOTOR	1	
2	08316-10087	NUT	1	
3	36610-88LD0	HARNESS ASSY, WIRING	1	
4	33634-96J00	.CAP, SERVICE CONNECTOR	1	
5	36668-87L00	.HOLDER, CONDENSER	1	
6	09320-08021	.CUSHION	2	
7	36737-96J00	.PULLER, FUSE	1	
8	36721-96J00	.O RING, UPPER COVER	1	
9	36738-88L00	.COVER, FUSE CASE UPPER	1	
10	38860-76F01	.RELAY, ENG CONTROL UNIT	1	
11	38860-76F01	.RELAY ASSY, STARTER MOTOR	1	
12	09481-15501	.FUSE (15A)	3	
13	09481-30501	.FUSE (30A)	3	
14	09481-30401	.FUSE (30A)	2	
15	36612-96J00	.CAP, TERMINAL	1	
16	36618-43410	.CAP, OIL PRESSURE SWITCH	1	
17	08310-00067	NUT	1	
18	08321-01067	WASHER	1	
19	09407-14403	CLAMP (L:125)	1	
20	09407-14407	CLAMP (L:145)	1	
21	36617-88L00	BRACKET, HARNESS	2	
22	36617-88L10	BRACKET, HARNESS	1	
23	36617-93J10	BRACKET, HARNESS	2	
24	01550-06127	BOLT	5	
25	09407-18402	CLAMP (L:165)	1	

FIG.322B

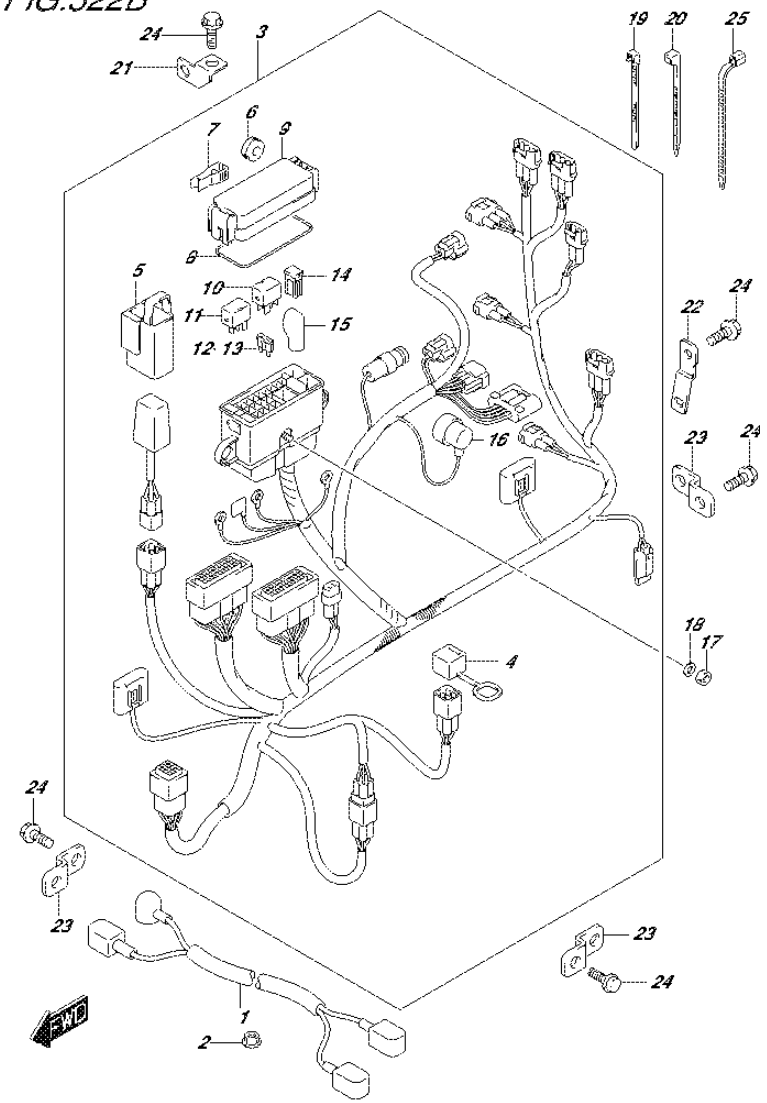

FIG.322B (2-H-10) HARNESS (DF40AQH E01)

REF NO.	PART NO.	DESCRIPTION	Q'TY	REMARKS
1	33810-88L10	CABLE ASSY, STARTER MOTOR	1	
2	08316-10087	NUT	1	
3	36610-88LC0	HARNESS ASSY, WIRING	1	
4	33634-96J00	.CAP, SERVICE CONNECTOR	1	
5	36668-87L00	.HOLDER, CONDENSER	1	
6	09320-08021	.CUSHION	2	
7	36737-96J00	.PULLER, FUSE	1	
8	36721-96J00	.O RING, UPPER COVER	1	
9	36738-88L00	.COVER, FUSE CASE UPPER	1	
10	38860-76F01	.RELAY, ENG CONTROL UNIT	1	
11	38860-76F01	.RELAY ASSY, STARTER MOTOR	1	
12	09481-15501	.FUSE (15A)	2	
13	09481-30501	.FUSE (30A)	3	
14	09481-30401	.FUSE (30A)	2	
15	36612-96J00	.CAP, TERMINAL	1	
16	36618-43410	.CAP, OIL PRESSURE SWITCH	1	
17	08310-00067	NUT	1	
18	08321-01067	WASHER	1	
19	09407-14403	CLAMP (L:125)	1	
20	09407-14407	CLAMP (L:145)	1	
21	36617-88L00	BRACKET, HARNESS	2	
22	36617-88L10	BRACKET, HARNESS	1	
23	36617-93J10	BRACKET, HARNESS	2	
24	01550-06127	BOLT	5	
25	09407-18402	CLAMP (L:165)	1	

FIG.322C

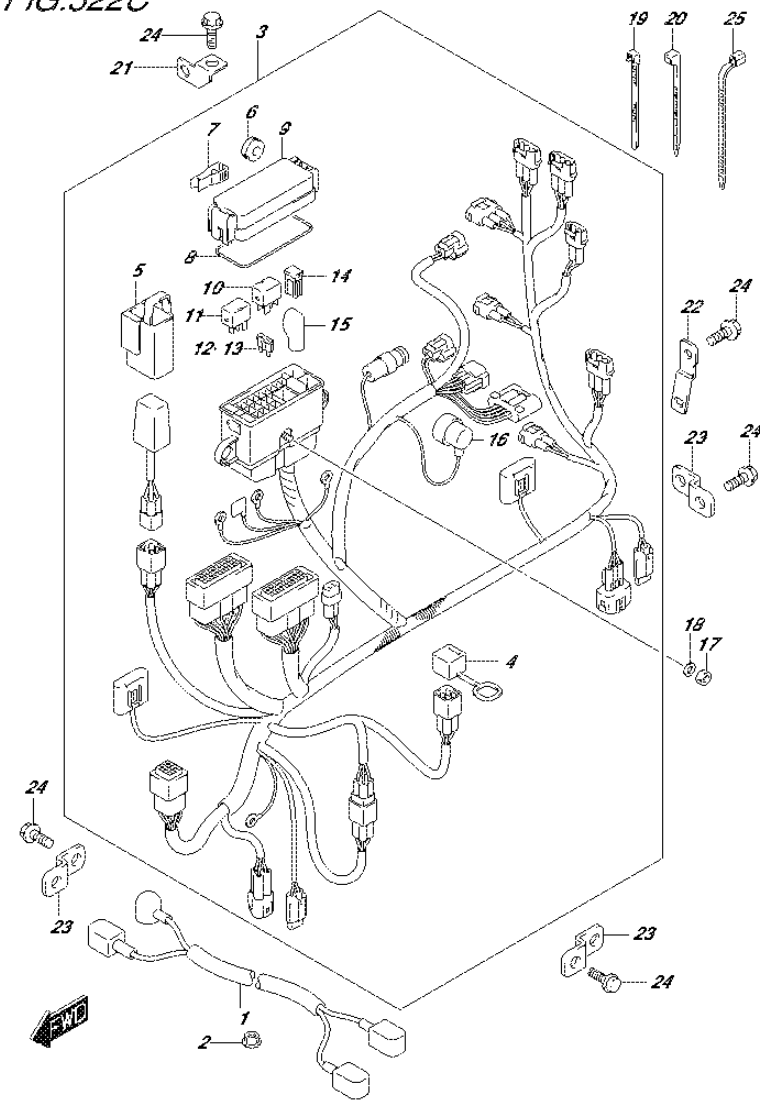

FIG.322C (2-H-11) HARNESS (DF40ATH E01)

REF NO.	PART NO.	DESCRIPTION	Q'TY	REMARKS
1	33810-88L10	CABLE ASSY, STARTER MOTOR	1	
2	08316-10087	NUT	1	
3	36610-88LD0	HARNESS ASSY, WIRING	1	
4	33634-96J00	.CAP, SERVICE CONNECTOR	1	
5	36668-87L00	.HOLDER, CONDENSER	1	
6	09320-08021	.CUSHION	2	
7	36737-96J00	.PULLER, FUSE	1	
8	36721-96J00	.O RING, UPPER COVER	1	
9	36738-88L00	.COVER, FUSE CASE UPPER	1	
10	38860-76F01	.RELAY, ENG CONTROL UNIT	1	
11	38860-76F01	.RELAY ASSY, STARTER MOTOR	1	
12	09481-15501	.FUSE (15A)	3	
13	09481-30501	.FUSE (30A)	3	
14	09481-30401	.FUSE (30A)	2	
15	36612-96J00	.CAP, TERMINAL	1	
16	36618-43410	.CAP, OIL PRESSURE SWITCH	1	
17	08310-00067	NUT	1	
18	08321-01067	WASHER	1	
19	09407-14403	CLAMP (L:125)	1	
20	09407-14407	CLAMP (L:145)	1	
21	36617-88L00	BRACKET, HARNESS	2	
22	36617-88L10	BRACKET, HARNESS	1	
23	36617-93J10	BRACKET, HARNESS	2	
24	01550-06127	BOLT	5	
25	09407-18402	CLAMP (L:165)	1	

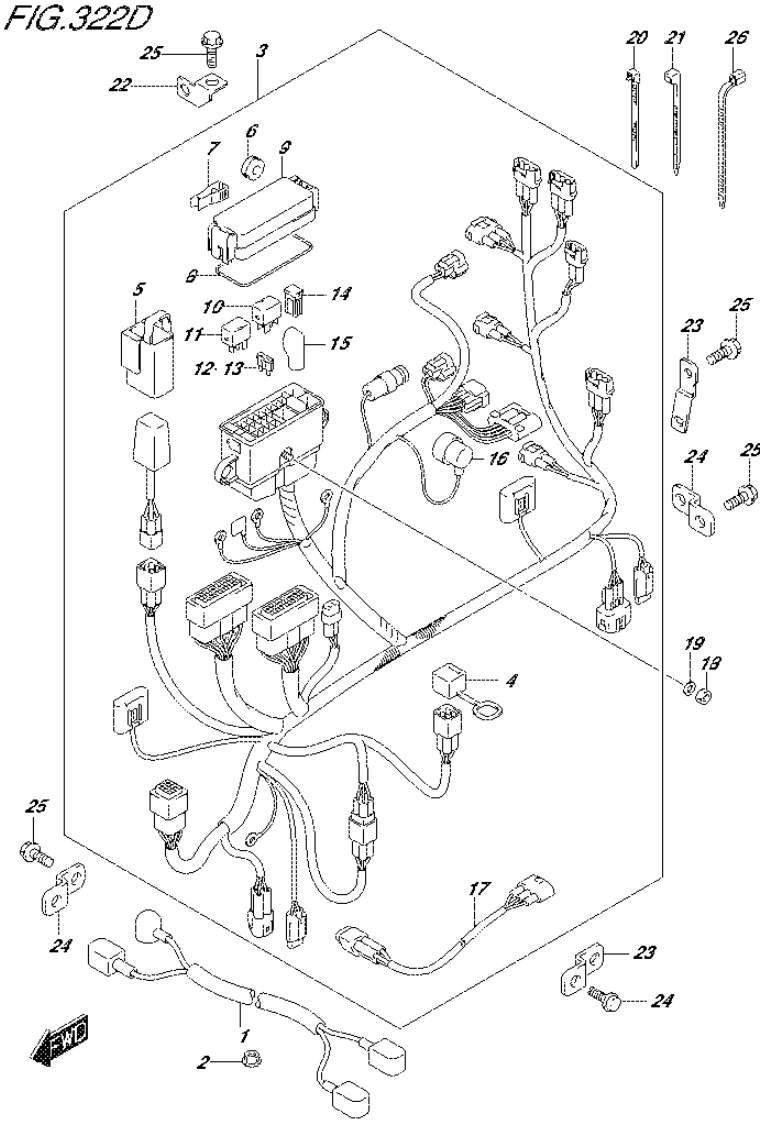

FIG.322D (2-H-12) HARNESS (DF40AST E34)

REF NO.	PART NO.	DESCRIPTION	Q'TY	REMARKS
1	33810-88L10	CABLE ASSY, STARTER MOTOR	1	
2	08316-10087	NUT	1	
3	36610-88LE1	HARNESS ASSY, WIRING	1	
4	33634-96J00	.CAP, SERVICE CONNECTOR	1	
5	36668-87L00	.HOLDER, CONDENSER	1	
6	09320-08021	.CUSHION	2	
7	36737-96J00	.PULLER, FUSE	1	
8	36721-96J00	.O RING, UPPER COVER	1	
9	36738-88L00	.COVER, FUSE CASE UPPER	1	
10	38860-76F01	.RELAY, ENG CONTROL UNIT	1	
11	38860-76F01	.RELAY ASSY, STARTER MOTOR	1	
12	09481-15501	.FUSE (15A)	3	
13	09481-30501	.FUSE (30A)	3	
14	09481-30401	.FUSE (30A)	2	
15	36612-96J00	.CAP, TERMINAL	1	
16	36618-43410	.CAP, OIL PRESSURE SWITCH	1	
17	36611-88L00	.HARNESS ASSY,WIRING SUB	1	
18	08310-00067	NUT	1	
19	08321-01067	WASHER	1	
20	09407-14403	CLAMP (L:125)	1	
21	09407-14407	CLAMP (L:145)	1	
22	36617-88L00	BRACKET, HARNESS	2	
23	36617-88L10	BRACKET, HARNESS	1	
24	36617-93J10	BRACKET, HARNESS	2	
25	01550-06127	BOLT	5	
26	09407-18402	CLAMP (L:165)	1	

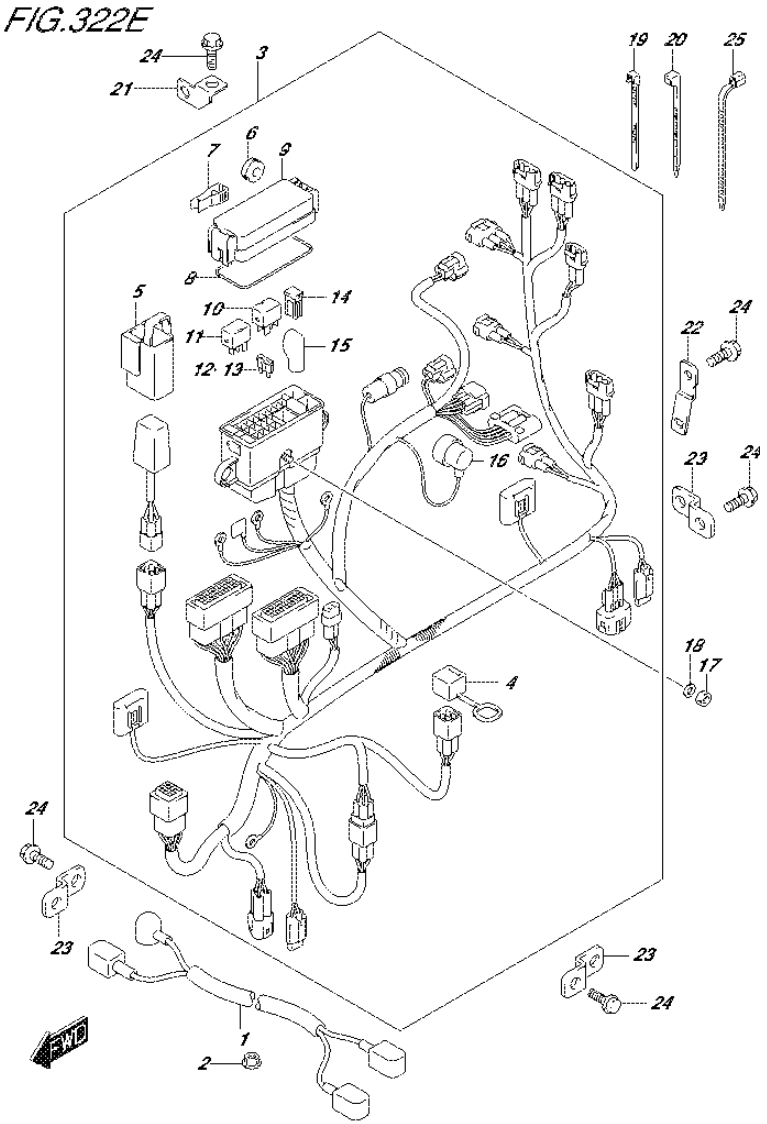

FIG.322E (2-H-13) HARNESS (DF50A E01)

REF NO.	PART NO.	DESCRIPTION	Q'TY	REMARKS
1	33810-88L10	CABLE ASSY, STARTER MOTOR	1	
2	08316-10087	NUT	1	
3	36610-88LD0	HARNESS ASSY, WIRING	1	
4	33634-96J00	.CAP, SERVICE CONNECTOR	1	
5	36668-87L00	.HOLDER, CONDENSER	1	
6	09320-08021	.CUSHION	2	
7	36737-96J00	.PULLER, FUSE	1	
8	36721-96J00	.O RING, UPPER COVER	1	
9	36738-88L00	.COVER, FUSE CASE UPPER	1	
10	38860-76F01	.RELAY, ENG CONTROL UNIT	1	
11	38860-76F01	.RELAY ASSY, STARTER MOTOR	1	
12	09481-15501	.FUSE (15A)	3	
13	09481-30501	.FUSE (30A)	3	
14	09481-30401	.FUSE (30A)	2	
15	36612-96J00	.CAP, TERMINAL	1	
16	36618-43410	.CAP, OIL PRESSURE SWITCH	1	
17	08310-00067	NUT	1	
18	08321-01067	WASHER	1	
19	09407-14403	CLAMP (L:125)	1	
20	09407-14407	CLAMP (L:145)	1	
21	36617-88L00	BRACKET, HARNESS	2	
22	36617-88L10	BRACKET, HARNESS	1	
23	36617-93J10	BRACKET, HARNESS	2	
24	01550-06127	BOLT	5	
25	09407-18402	CLAMP (L:165)	1	

FIG.322F

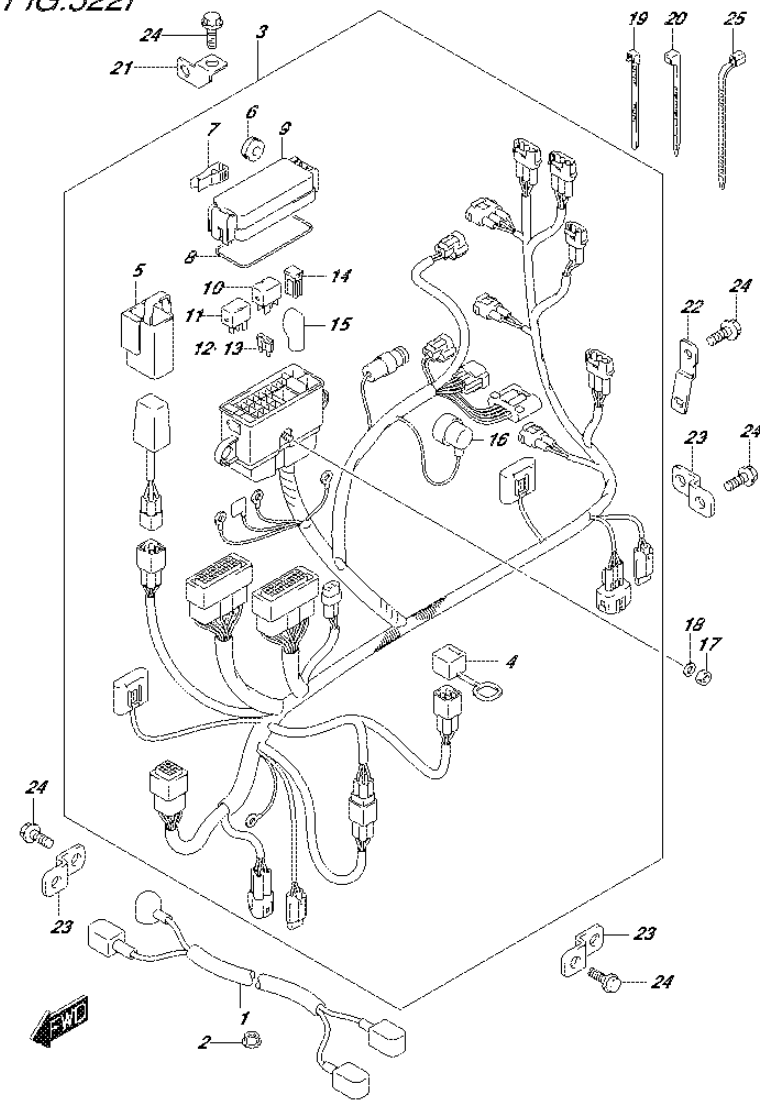

FIG.322F (2-H-14) HARNESS (DF50ATH E01)

REF NO.	PART NO.	DESCRIPTION	Q'TY	REMARKS
1	33810-88L10	CABLE ASSY, STARTER MOTOR	1	
2	08316-10087	NUT	1	
3	36610-88LD0	HARNESS ASSY, WIRING	1	
4	33634-96J00	.CAP, SERVICE CONNECTOR	1	
5	36668-87L00	.HOLDER, CONDENSER	1	
6	09320-08021	.CUSHION	2	
7	36737-96J00	.PULLER, FUSE	1	
8	36721-96J00	.O RING, UPPER COVER	1	
9	36738-88L00	.COVER, FUSE CASE UPPER	1	
10	38860-76F01	.RELAY, ENG CONTROL UNIT	1	
11	38860-76F01	.RELAY ASSY, STARTER MOTOR	1	
12	09481-15501	.FUSE (15A)	3	
13	09481-30501	.FUSE (30A)	3	
14	09481-30401	.FUSE (30A)	2	
15	36612-96J00	.CAP, TERMINAL	1	
16	36618-43410	.CAP, OIL PRESSURE SWITCH	1	
17	08310-00067	NUT	1	
18	08321-01067	WASHER	1	
19	09407-14403	CLAMP (L:125)	1	
20	09407-14407	CLAMP (L:145)	1	
21	36617-88L00	BRACKET, HARNESS	2	
22	36617-88L10	BRACKET, HARNESS	1	
23	36617-93J10	BRACKET, HARNESS	2	
24	01550-06127	BOLT	5	
25	09407-18402	CLAMP (L:165)	1	

FIG.322G

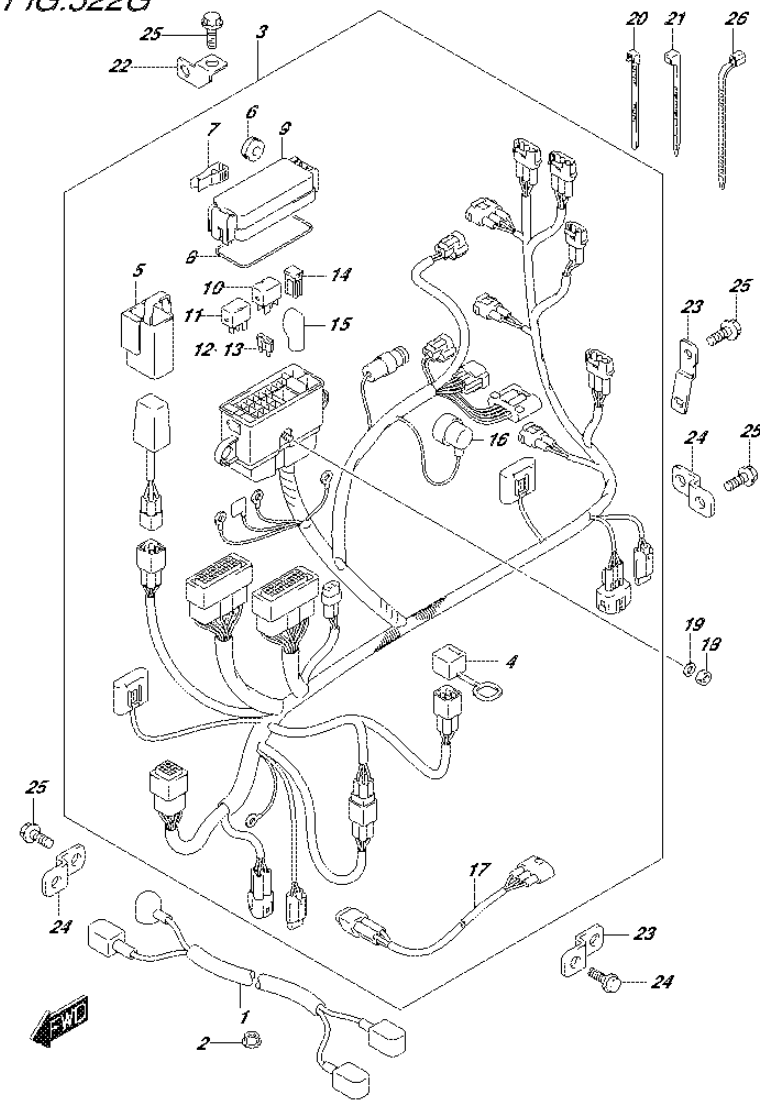

FIG.322G (2-H-15) HARNESS (DF60A E01)

REF NO.	PART NO.	DESCRIPTION	Q'TY	REMARKS
1	33810-88L10	CABLE ASSY, STARTER MOTOR	1	
2	08316-10087	NUT	1	
3	36610-88LE1	HARNESS ASSY, WIRING	1	
4	33634-96J00	.CAP, SERVICE CONNECTOR	1	
5	36668-87L00	.HOLDER, CONDENSER	1	
6	09320-08021	.CUSHION	2	
7	36737-96J00	.PULLER, FUSE	1	
8	36721-96J00	.O RING, UPPER COVER	1	
9	36738-88L00	.COVER, FUSE CASE UPPER	1	
10	38860-76F01	.RELAY, ENG CONTROL UNIT	1	
11	38860-76F01	.RELAY ASSY, STARTER MOTOR	1	
12	09481-15501	.FUSE (15A)	3	
13	09481-30501	.FUSE (30A)	3	
14	09481-30401	.FUSE (30A)	2	
15	36612-96J00	.CAP, TERMINAL	1	
16	36618-43410	.CAP, OIL PRESSURE SWITCH	1	
17	36611-88L00	.HARNESS ASSY,WIRING SUB	1	
18	08310-00067	NUT	1	
19	08321-01067	WASHER	1	
20	09407-14403	CLAMP (L:125)	1	
21	09407-14407	CLAMP (L:145)	1	
22	36617-88L00	BRACKET, HARNESS	2	
23	36617-88L10	BRACKET, HARNESS	1	
24	36617-93J10	BRACKET, HARNESS	2	
25	01550-06127	BOLT	5	
26	09407-18402	CLAMP (L:165)	1	

FIG.322H

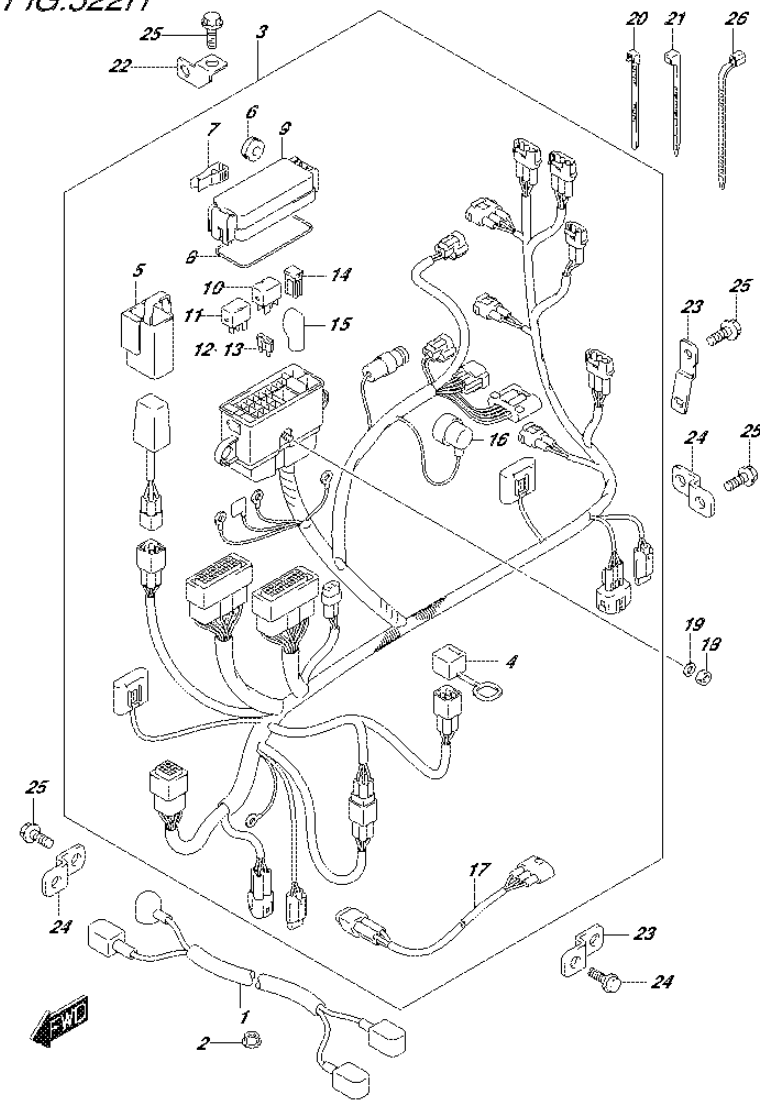

FIG.322H (2-I-2) HARNESS (DF60A E40)

REF NO.	PART NO.	DESCRIPTION	Q'TY	REMARKS
1	33810-88L10	CABLE ASSY, STARTER MOTOR	1	
2	08316-10087	NUT	1	
3	36610-88LE1	HARNESS ASSY, WIRING	1	
4	33634-96J00	.CAP, SERVICE CONNECTOR	1	
5	36668-87L00	.HOLDER, CONDENSER	1	
6	09320-08021	.CUSHION	2	
7	36737-96J00	.PULLER, FUSE	1	
8	36721-96J00	.O RING, UPPER COVER	1	
9	36738-88L00	.COVER, FUSE CASE UPPER	1	
10	38860-76F01	.RELAY, ENG CONTROL UNIT	1	
11	38860-76F01	.RELAY ASSY, STARTER MOTOR	1	
12	09481-15501	.FUSE (15A)	3	
13	09481-30501	.FUSE (30A)	3	
14	09481-30401	.FUSE (30A)	2	
15	36612-96J00	.CAP, TERMINAL	1	
16	36618-43410	.CAP, OIL PRESSURE SWITCH	1	
17	36611-88L00	.HARNESS ASSY,WIRING SUB	1	
18	08310-00067	NUT	1	
19	08321-01067	WASHER	1	
20	09407-14403	CLAMP (L:125)	1	
21	09407-14407	CLAMP (L:145)	1	
22	36617-88L00	BRACKET, HARNESS	2	
23	36617-88L10	BRACKET, HARNESS	1	
24	36617-93J10	BRACKET, HARNESS	2	
25	01550-06127	BOLT	5	
26	09407-18402	CLAMP (L:165)	1	

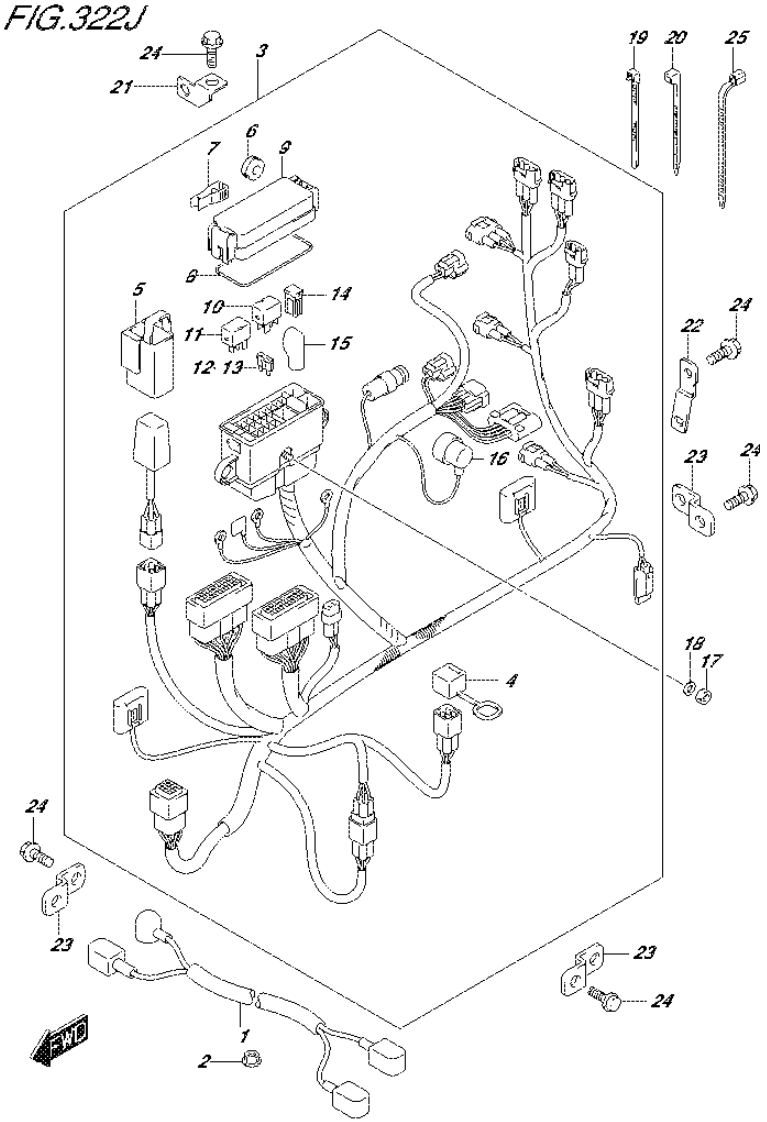

FIG.322J (2-I-3) HARNESS (DF60AQH E01)

REF NO.	PART NO.	DESCRIPTION	Q'TY	REMARKS
1	33810-88L10	CABLE ASSY, STARTER MOTOR	1	
2	08316-10087	NUT	1	
3	36610-88LC0	HARNESS ASSY, WIRING	1	
4	33634-96J00	.CAP, SERVICE CONNECTOR	1	
5	36668-87L00	.HOLDER, CONDENSER	1	
6	09320-08021	.CUSHION	2	
7	36737-96J00	.PULLER, FUSE	1	
8	36721-96J00	.O RING, UPPER COVER	1	
9	36738-88L00	.COVER, FUSE CASE UPPER	1	
10	38860-76F01	.RELAY, ENG CONTROL UNIT	1	
11	38860-76F01	.RELAY ASSY, STARTER MOTOR	1	
12	09481-15501	.FUSE (15A)	2	
13	09481-30501	.FUSE (30A)	3	
14	09481-30401	.FUSE (30A)	2	
15	36612-96J00	.CAP, TERMINAL	1	
16	36618-43410	.CAP, OIL PRESSURE SWITCH	1	
17	08310-00067	NUT	1	
18	08321-01067	WASHER	1	
19	09407-14403	CLAMP (L:125)	1	
20	09407-14407	CLAMP (L:145)	1	
21	36617-88L00	BRACKET, HARNESS	2	
22	36617-88L10	BRACKET, HARNESS	1	
23	36617-93J10	BRACKET, HARNESS	2	
24	01550-06127	BOLT	5	
25	09407-18402	CLAMP (L:165)	1	

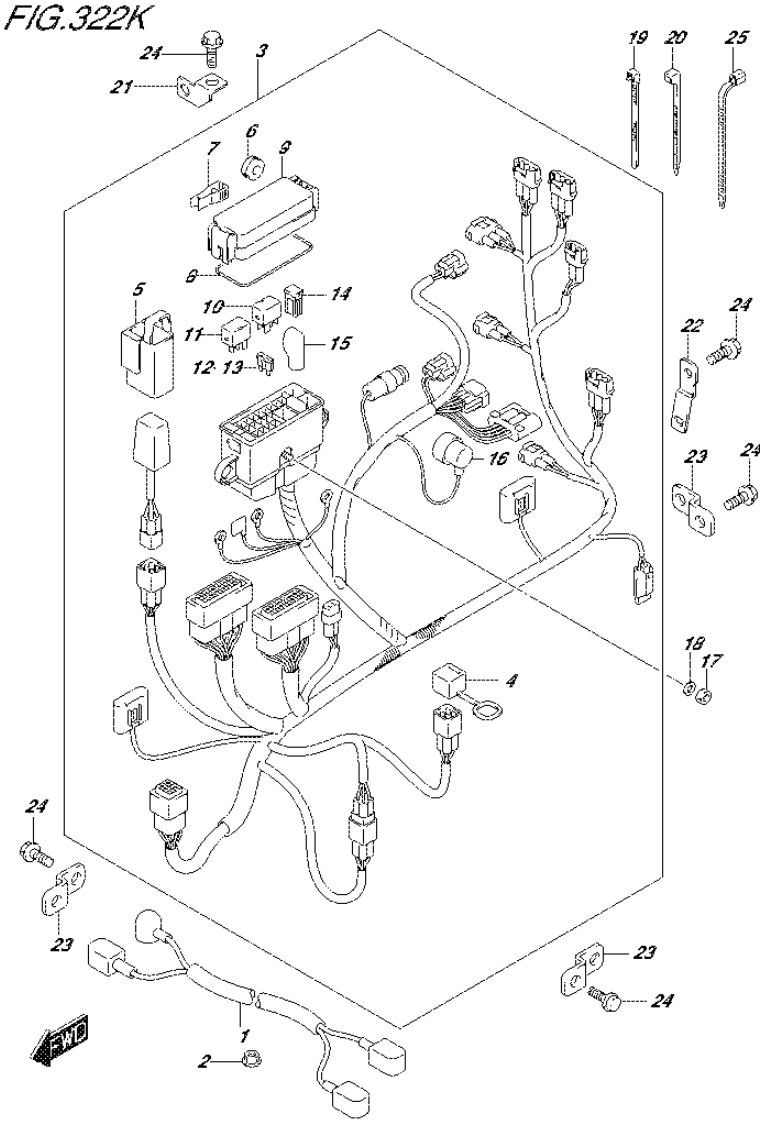

FIG.322K (2-I-4) HARNESS (DF60AQH E40)

REF NO.	PART NO.	DESCRIPTION	Q'TY	REMARKS
1	33810-88L10	CABLE ASSY, STARTER MOTOR	1	
2	08316-10087	NUT	1	
3	36610-88LC0	HARNESS ASSY, WIRING	1	
4	33634-96J00	.CAP, SERVICE CONNECTOR	1	
5	36668-87L00	.HOLDER, CONDENSER	1	
6	09320-08021	.CUSHION	2	
7	36737-96J00	.PULLER, FUSE	1	
8	36721-96J00	.O RING, UPPER COVER	1	
9	36738-88L00	.COVER, FUSE CASE UPPER	1	
10	38860-76F01	.RELAY, ENG CONTROL UNIT	1	
11	38860-76F01	.RELAY ASSY, STARTER MOTOR	1	
12	09481-15501	.FUSE (15A)	2	
13	09481-30501	.FUSE (30A)	3	
14	09481-30401	.FUSE (30A)	2	
15	36612-96J00	.CAP, TERMINAL	1	
16	36618-43410	.CAP, OIL PRESSURE SWITCH	1	
17	08310-00067	NUT	1	
18	08321-01067	WASHER	1	
19	09407-14403	CLAMP (L:125)	1	
20	09407-14407	CLAMP (L:145)	1	
21	36617-88L00	BRACKET, HARNESS	2	
22	36617-88L10	BRACKET, HARNESS	1	
23	36617-93J10	BRACKET, HARNESS	2	
24	01550-06127	BOLT	5	
25	09407-18402	CLAMP (L:165)	1	

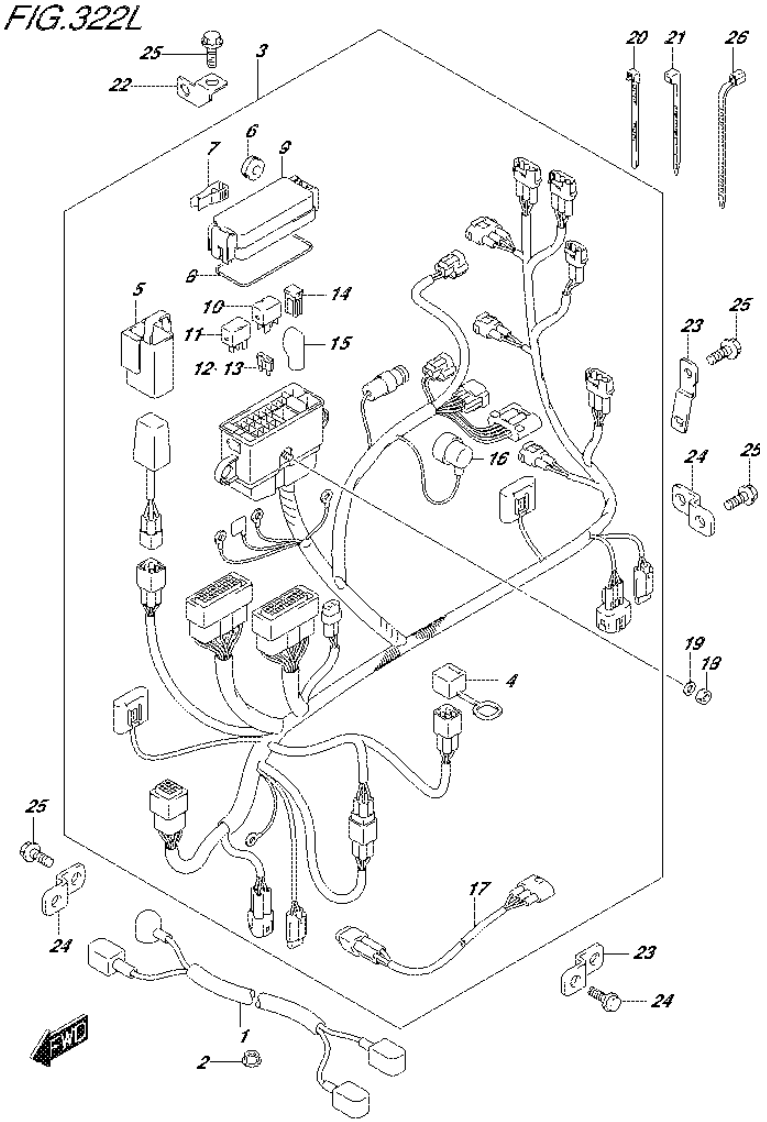

FIG.322L (2-I-5) HARNESS (DF60ATH E01)

REF NO.	PART NO.	DESCRIPTION	Q'TY	REMARKS
1	33810-88L10	CABLE ASSY, STARTER MOTOR	1	
2	08316-10087	NUT	1	
3	36610-88LE1	HARNESS ASSY, WIRING	1	
4	33634-96J00	.CAP, SERVICE CONNECTOR	1	
5	36668-87L00	.HOLDER, CONDENSER	1	
6	09320-08021	.CUSHION	2	
7	36737-96J00	.PULLER, FUSE	1	
8	36721-96J00	.O RING, UPPER COVER	1	
9	36738-88L00	.COVER, FUSE CASE UPPER	1	
10	38860-76F01	.RELAY, ENG CONTROL UNIT	1	
11	38860-76F01	.RELAY ASSY, STARTER MOTOR	1	
12	09481-15501	.FUSE (15A)	3	
13	09481-30501	.FUSE (30A)	3	
14	09481-30401	.FUSE (30A)	2	
15	36612-96J00	.CAP, TERMINAL	1	
16	36618-43410	.CAP, OIL PRESSURE SWITCH	1	
17	36611-88L00	.HARNESS ASSY,WIRING SUB	1	
18	08310-00067	NUT	1	
19	08321-01067	WASHER	1	
20	09407-14403	CLAMP (L:125)	1	
21	09407-14407	CLAMP (L:145)	1	
22	36617-88L00	BRACKET, HARNESS	2	
23	36617-88L10	BRACKET, HARNESS	1	
24	36617-93J10	BRACKET, HARNESS	2	
25	01550-06127	BOLT	5	
26	09407-18402	CLAMP (L:165)	1	

FIG.322M

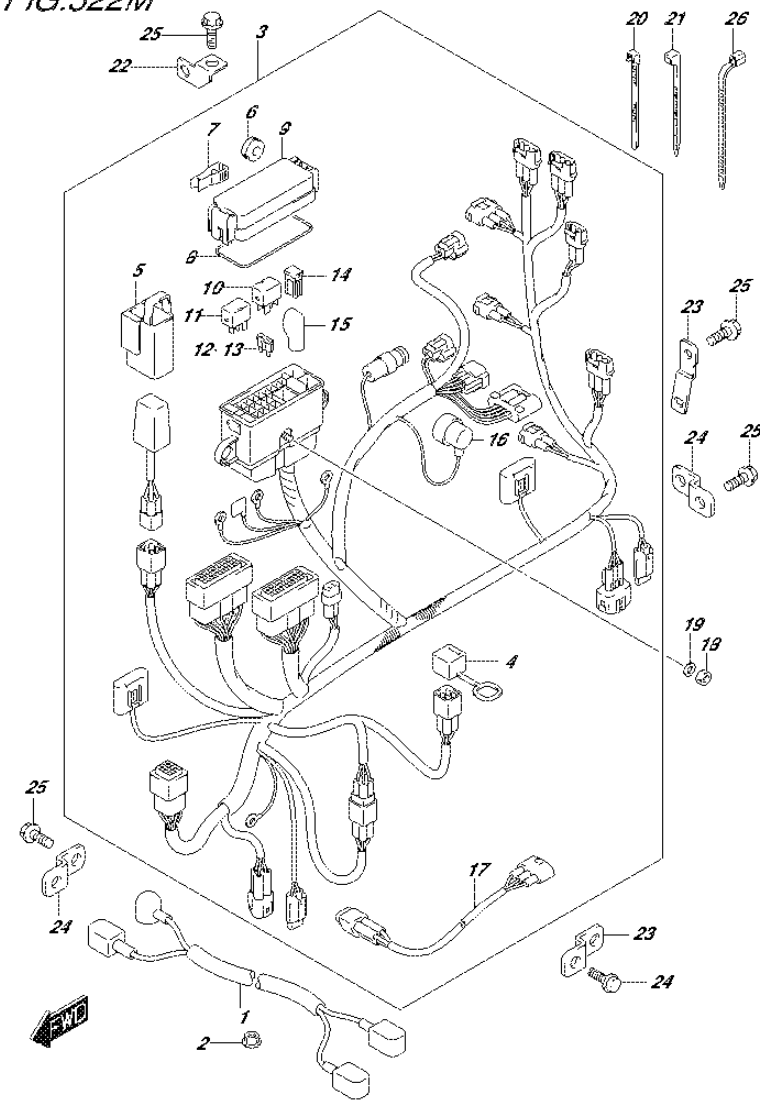

FIG.322M (2-I-6) HARNESS (DF60ATH E40)

REF NO.	PART NO.	DESCRIPTION	Q'TY	REMARKS
1	33810-88L10	CABLE ASSY, STARTER MOTOR	1	
2	08316-10087	NUT	1	
3	36610-88LE1	HARNESS ASSY, WIRING	1	
4	33634-96J00	.CAP, SERVICE CONNECTOR	1	
5	36668-87L00	.HOLDER, CONDENSER	1	
6	09320-08021	.CUSHION	2	
7	36737-96J00	.PULLER, FUSE	1	
8	36721-96J00	.O RING, UPPER COVER	1	
9	36738-88L00	.COVER, FUSE CASE UPPER	1	
10	38860-76F01	.RELAY, ENG CONTROL UNIT	1	
11	38860-76F01	.RELAY ASSY, STARTER MOTOR	1	
12	09481-15501	.FUSE (15A)	3	
13	09481-30501	.FUSE (30A)	3	
14	09481-30401	.FUSE (30A)	2	
15	36612-96J00	.CAP, TERMINAL	1	
16	36618-43410	.CAP, OIL PRESSURE SWITCH	1	
17	36611-88L00	.HARNESS ASSY,WIRING SUB	1	
18	08310-00067	NUT	1	
19	08321-01067	WASHER	1	
20	09407-14403	CLAMP (L:125)	1	
21	09407-14407	CLAMP (L:145)	1	
22	36617-88L00	BRACKET, HARNESS	2	
23	36617-88L10	BRACKET, HARNESS	1	
24	36617-93J10	BRACKET, HARNESS	2	
25	01550-06127	BOLT	5	
26	09407-18402	CLAMP (L:165)	1	

FIG.322N

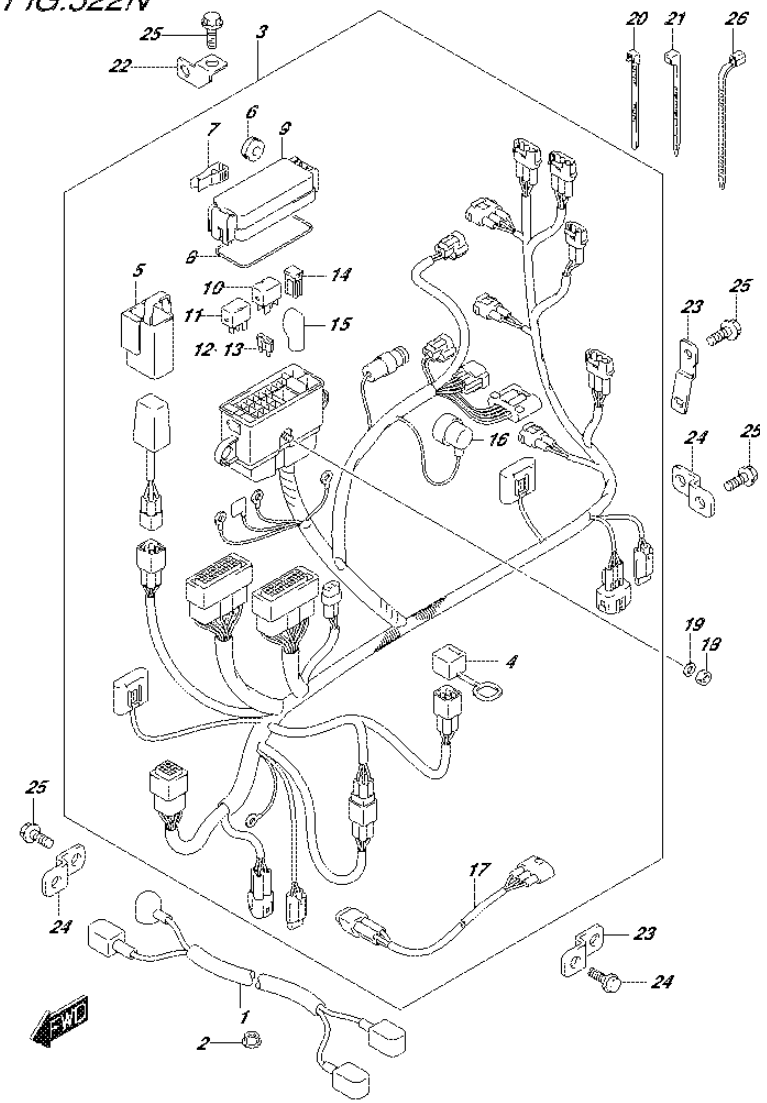

FIG.322N (2-I-7) HARNESS (DF50AVT E01)

REF NO.	PART NO.	DESCRIPTION	Q'TY	REMARKS
1	33810-88L10	CABLE ASSY, STARTER MOTOR	1	
2	08316-10087	NUT	1	
3	36610-88LE1	HARNESS ASSY, WIRING	1	
4	33634-96J00	.CAP, SERVICE CONNECTOR	1	
5	36668-87L00	.HOLDER, CONDENSER	1	
6	09320-08021	.CUSHION	2	
7	36737-96J00	.PULLER, FUSE	1	
8	36721-96J00	.O RING, UPPER COVER	1	
9	36738-88L00	.COVER, FUSE CASE UPPER	1	
10	38860-76F01	.RELAY, ENG CONTROL UNIT	1	
11	38860-76F01	.RELAY ASSY, STARTER MOTOR	1	
12	09481-15501	.FUSE (15A)	3	
13	09481-30501	.FUSE (30A)	3	
14	09481-30401	.FUSE (30A)	2	
15	36612-96J00	.CAP, TERMINAL	1	
16	36618-43410	.CAP, OIL PRESSURE SWITCH	1	
17	36611-88L00	.HARNESS ASSY,WIRING SUB	1	
18	08310-00067	NUT	1	
19	08321-01067	WASHER	1	
20	09407-14403	CLAMP (L:125)	1	
21	09407-14407	CLAMP (L:145)	1	
22	36617-88L00	BRACKET, HARNESS	2	
23	36617-88L10	BRACKET, HARNESS	1	
24	36617-93J10	BRACKET, HARNESS	2	
25	01550-06127	BOLT	5	
26	09407-18402	CLAMP (L:165)	1	

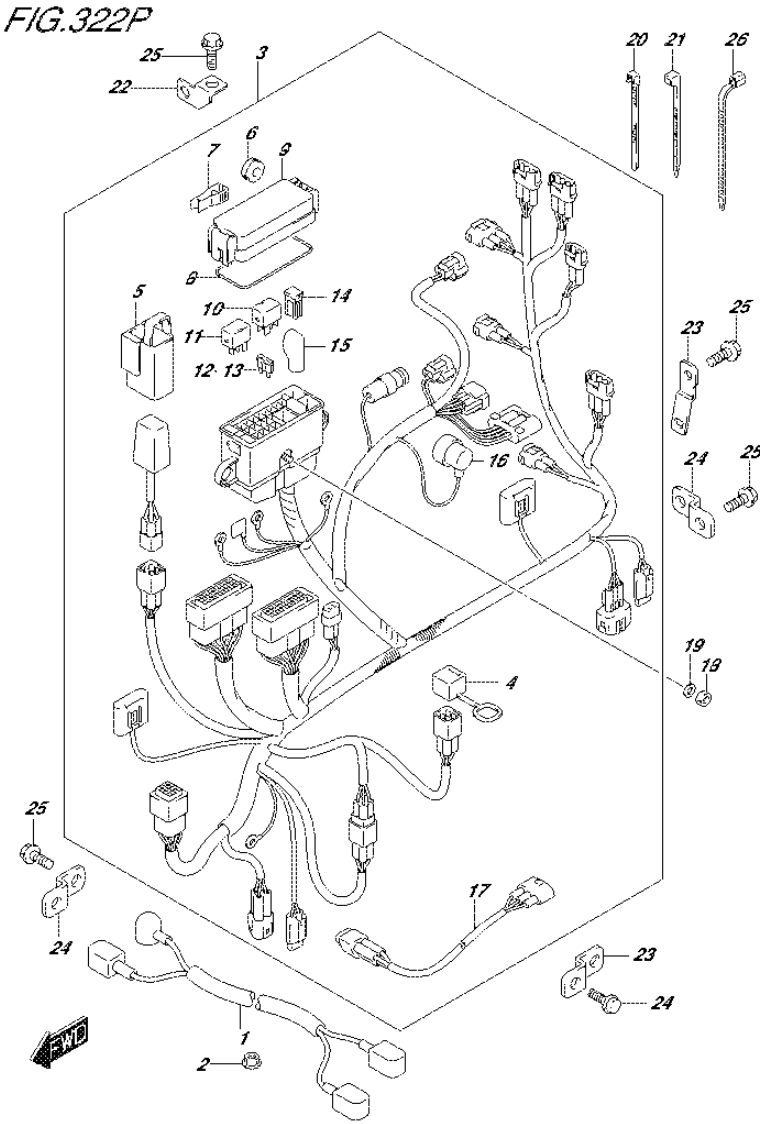

FIG.322P (2-I-8) HARNESS (DF50AVTH E01)

REF NO.	PART NO.	DESCRIPTION	Q'TY	REMARKS
1	33810-88L10	CABLE ASSY, STARTER MOTOR	1	
2	08316-10087	NUT	1	
3	36610-88LE1	HARNESS ASSY, WIRING	1	
4	33634-96J00	.CAP, SERVICE CONNECTOR	1	
5	36668-87L00	.HOLDER, CONDENSER	1	
6	09320-08021	.CUSHION	2	
7	36737-96J00	.PULLER, FUSE	1	
8	36721-96J00	.O RING, UPPER COVER	1	
9	36738-88L00	.COVER, FUSE CASE UPPER	1	
10	38860-76F01	.RELAY, ENG CONTROL UNIT	1	
11	38860-76F01	.RELAY ASSY, STARTER MOTOR	1	
12	09481-15501	.FUSE (15A)	3	
13	09481-30501	.FUSE (30A)	3	
14	09481-30401	.FUSE (30A)	2	
15	36612-96J00	.CAP, TERMINAL	1	
16	36618-43410	.CAP, OIL PRESSURE SWITCH	1	
17	36611-88L00	.HARNESS ASSY,WIRING SUB	1	
18	08310-00067	NUT	1	
19	08321-01067	WASHER	1	
20	09407-14403	CLAMP (L:125)	1	
21	09407-14407	CLAMP (L:145)	1	
22	36617-88L00	BRACKET, HARNESS	2	
23	36617-88L10	BRACKET, HARNESS	1	
24	36617-93J10	BRACKET, HARNESS	2	
25	01550-06127	BOLT	5	
26	09407-18402	CLAMP (L:165)	1	

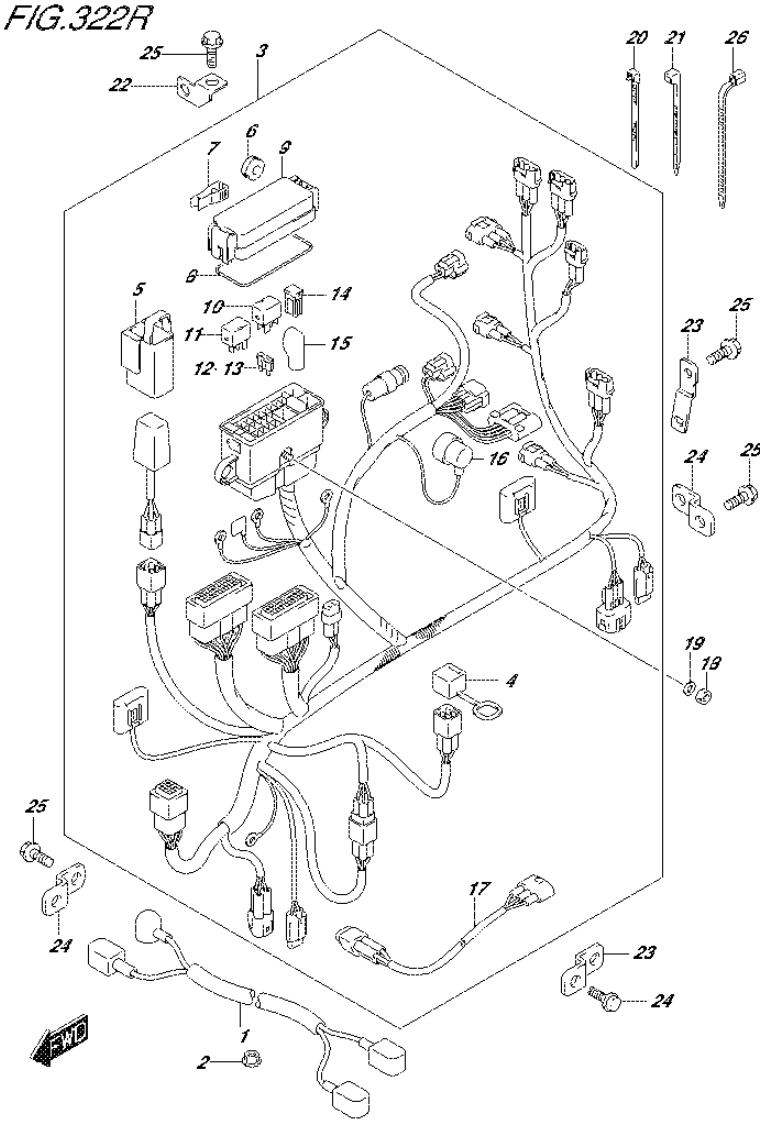

FIG.322R (2-I-9) HARNESS (DF60AVT E01)

REF NO.	PART NO.	DESCRIPTION	Q'TY	REMARKS
1	33810-88L10	CABLE ASSY, STARTER MOTOR	1	
2	08316-10087	NUT	1	
3	36610-88LE1	HARNESS ASSY, WIRING	1	
4	33634-96J00	.CAP, SERVICE CONNECTOR	1	
5	36668-87L00	.HOLDER, CONDENSER	1	
6	09320-08021	.CUSHION	2	
7	36737-96J00	.PULLER, FUSE	1	
8	36721-96J00	.O RING, UPPER COVER	1	
9	36738-88L00	.COVER, FUSE CASE UPPER	1	
10	38860-76F01	.RELAY, ENG CONTROL UNIT	1	
11	38860-76F01	.RELAY ASSY, STARTER MOTOR	1	
12	09481-15501	.FUSE (15A)	3	
13	09481-30501	.FUSE (30A)	3	
14	09481-30401	.FUSE (30A)	2	
15	36612-96J00	.CAP, TERMINAL	1	
16	36618-43410	.CAP, OIL PRESSURE SWITCH	1	
17	36611-88L00	.HARNESS ASSY,WIRING SUB	1	
18	08310-00067	NUT	1	
19	08321-01067	WASHER	1	
20	09407-14403	CLAMP (L:125)	1	
21	09407-14407	CLAMP (L:145)	1	
22	36617-88L00	BRACKET, HARNESS	2	
23	36617-88L10	BRACKET, HARNESS	1	
24	36617-93J10	BRACKET, HARNESS	2	
25	01550-06127	BOLT	5	
26	09407-18402	CLAMP (L:165)	1	

FIG.322S

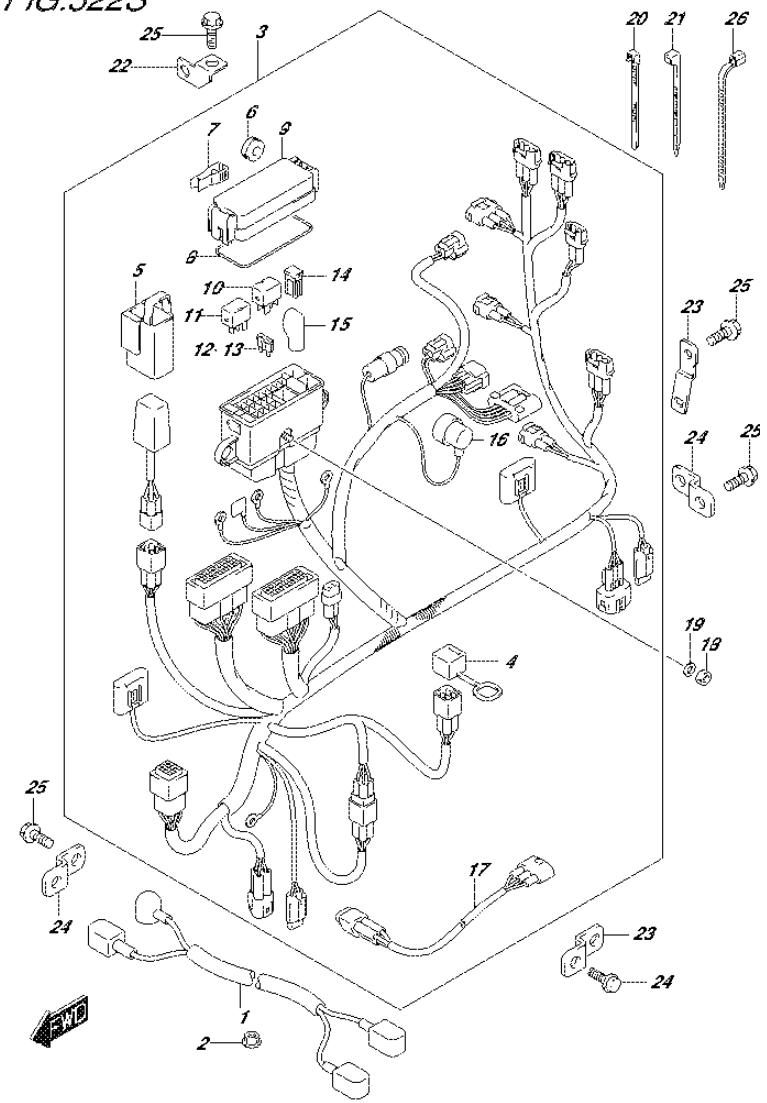

FIG.322S (2-I-10) HARNESS (DF60AVT E40)

REF NO.	PART NO.	DESCRIPTION	Q'TY	REMARKS
1	33810-88L10	CABLE ASSY, STARTER MOTOR	1	
2	08316-10087	NUT	1	
3	36610-88LE1	HARNESS ASSY, WIRING	1	
4	33634-96J00	.CAP, SERVICE CONNECTOR	1	
5	36668-87L00	.HOLDER, CONDENSER	1	
6	09320-08021	.CUSHION	2	
7	36737-96J00	.PULLER, FUSE	1	
8	36721-96J00	.O RING, UPPER COVER	1	
9	36738-88L00	.COVER, FUSE CASE UPPER	1	
10	38860-76F01	.RELAY, ENG CONTROL UNIT	1	
11	38860-76F01	.RELAY ASSY, STARTER MOTOR	1	
12	09481-15501	.FUSE (15A)	3	
13	09481-30501	.FUSE (30A)	3	
14	09481-30401	.FUSE (30A)	2	
15	36612-96J00	.CAP, TERMINAL	1	
16	36618-43410	.CAP, OIL PRESSURE SWITCH	1	
17	36611-88L00	.HARNESS ASSY,WIRING SUB	1	
18	08310-00067	NUT	1	
19	08321-01067	WASHER	1	
20	09407-14403	CLAMP (L:125)	1	
21	09407-14407	CLAMP (L:145)	1	
22	36617-88L00	BRACKET, HARNESS	2	
23	36617-88L10	BRACKET, HARNESS	1	
24	36617-93J10	BRACKET, HARNESS	2	
25	01550-06127	BOLT	5	
26	09407-18402	CLAMP (L:165)	1	

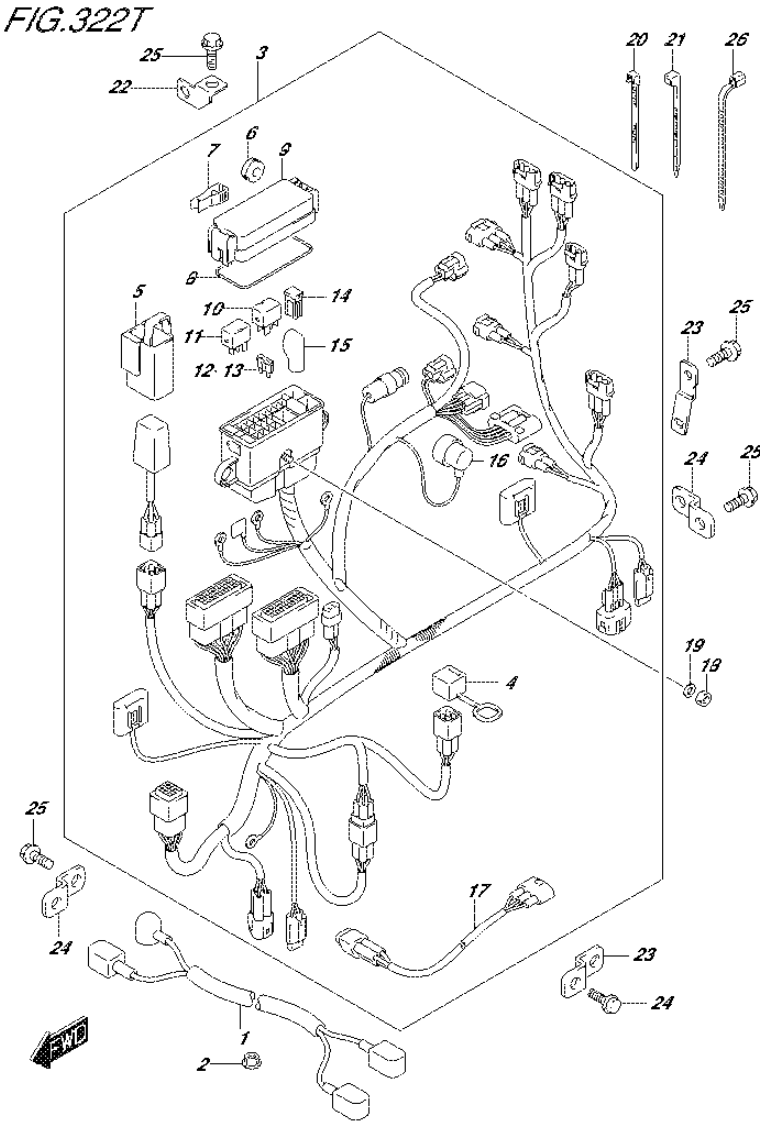

FIG.322T (2-I-11) HARNESS (DF60AVTH E01)

REF NO.	PART NO.	DESCRIPTION	Q'TY	REMARKS
1	33810-88L10	CABLE ASSY, STARTER MOTOR	1	
2	08316-10087	NUT	1	
3	36610-88LE1	HARNESS ASSY, WIRING	1	
4	33634-96J00	.CAP, SERVICE CONNECTOR	1	
5	36668-87L00	.HOLDER, CONDENSER	1	
6	09320-08021	.CUSHION	2	
7	36737-96J00	.PULLER, FUSE	1	
8	36721-96J00	.O RING, UPPER COVER	1	
9	36738-88L00	.COVER, FUSE CASE UPPER	1	
10	38860-76F01	.RELAY, ENG CONTROL UNIT	1	
11	38860-76F01	.RELAY ASSY, STARTER MOTOR	1	
12	09481-15501	.FUSE (15A)	3	
13	09481-30501	.FUSE (30A)	3	
14	09481-30401	.FUSE (30A)	2	
15	36612-96J00	.CAP, TERMINAL	1	
16	36618-43410	.CAP, OIL PRESSURE SWITCH	1	
17	36611-88L00	.HARNESS ASSY,WIRING SUB	1	
18	08310-00067	NUT	1	
19	08321-01067	WASHER	1	
20	09407-14403	CLAMP (L:125)	1	
21	09407-14407	CLAMP (L:145)	1	
22	36617-88L00	BRACKET, HARNESS	2	
23	36617-88L10	BRACKET, HARNESS	1	
24	36617-93J10	BRACKET, HARNESS	2	
25	01550-06127	BOLT	5	
26	09407-18402	CLAMP (L:165)	1	

FIG.322U

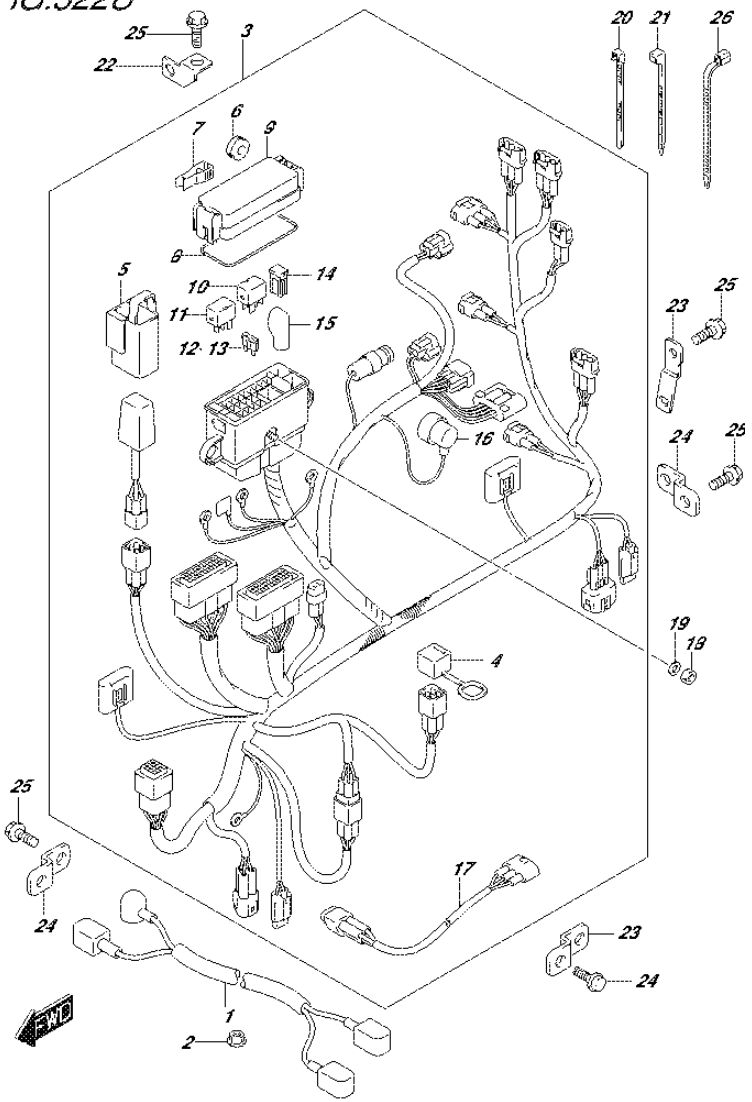

FIG.322U (2-I-12) HARNESS (DF60AVTH E40)

REF NO.	PART NO.	DESCRIPTION	Q'TY	REMARKS
1	33810-88L10	CABLE ASSY, STARTER MOTOR	1	
2	08316-10087	NUT	1	
3	36610-88LE1	HARNESS ASSY, WIRING	1	
4	33634-96J00	.CAP, SERVICE CONNECTOR	1	
5	36668-87L00	.HOLDER, CONDENSER	1	
6	09320-08021	.CUSHION	2	
7	36737-96J00	.PULLER, FUSE	1	
8	36721-96J00	.O RING, UPPER COVER	1	
9	36738-88L00	.COVER, FUSE CASE UPPER	1	
10	38860-76F01	.RELAY, ENG CONTROL UNIT	1	
11	38860-76F01	.RELAY ASSY, STARTER MOTOR	1	
12	09481-15501	.FUSE (15A)	3	
13	09481-30501	.FUSE (30A)	3	
14	09481-30401	.FUSE (30A)	2	
15	36612-96J00	.CAP, TERMINAL	1	
16	36618-43410	.CAP, OIL PRESSURE SWITCH	1	
17	36611-88L00	.HARNESS ASSY,WIRING SUB	1	
18	08310-00067	NUT	1	
19	08321-01067	WASHER	1	
20	09407-14403	CLAMP (L:125)	1	
21	09407-14407	CLAMP (L:145)	1	
22	36617-88L00	BRACKET, HARNESS	2	
23	36617-88L10	BRACKET, HARNESS	1	
24	36617-93J10	BRACKET, HARNESS	2	
25	01550-06127	BOLT	5	
26	09407-18402	CLAMP (L:165)	1	

FIG.326A

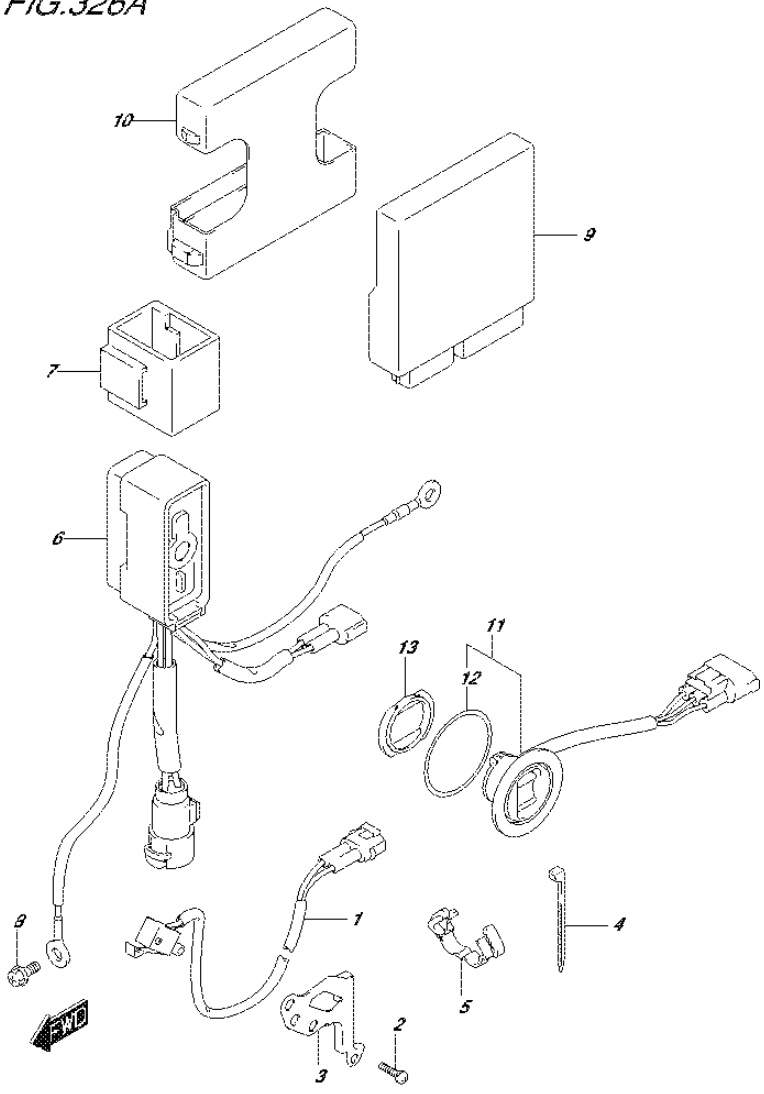

FIG.326A (2-I-13) PTT SWITCH/ENGINE CONTROL UNIT (DF40A E01)

REF NO.	PART NO.	DESCRIPTION	Q'TY	REMARKS
1	37721-93J00	SWITCH ASSY, NEUTRAL	1	
2	09137-04004	SCREW (4X16)	2	
3	37725-88L00	BRACKET, NEUTRAL SWITCH	1	
4	09407-10404	CLAMP (L:100)	1	
5	09408-00184	CLAMP	1	
6	38410-93J12	RELAY ASSY, PTT	1	
7	38415-93J00	HOLDER, PTT RELAY	1	
8	01550-06127	BOLT	1	
9	33930-88LL0	UNIT, ENGINE CONTROL	1	
10	33925-88L10	CUSHION, ENGINE CONTROL UNIT	1	
11	37850-92J00	SWITCH ASSY, PTT	1	
12	37856-92J00	.TAPE, PTT SWITCH	1	
13	37857-92J00	BUSH, PTT SWITH	1	

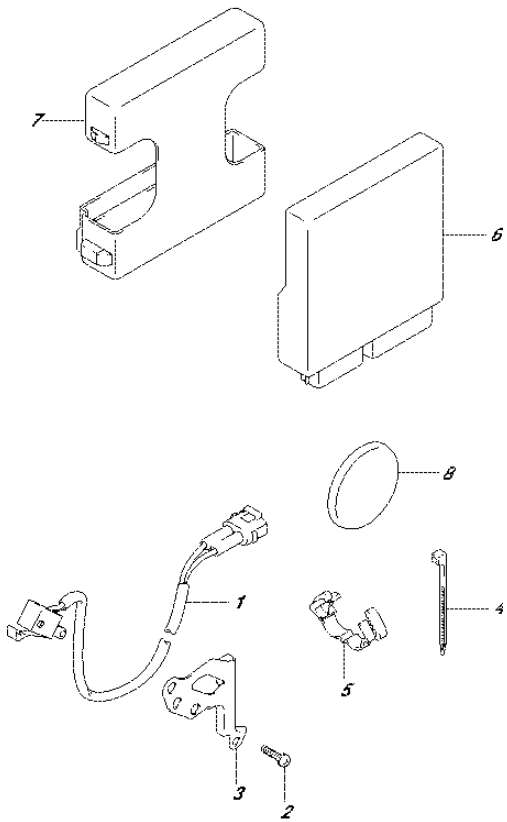

FIG.326B (2-I-14) PTT SWITCH/ENGINE CONTROL UNIT (DF40AQH E01)

REF NO.	PART NO.	DESCRIPTION	Q'TY	REMARKS
1	37721-93J00	SWITCH ASSY, NEUTRAL	1	
2	09137-04004	SCREW (4X16)	2	
3	37725-88L00	BRACKET, NEUTRAL SWITCH	1	
4	09407-10404	CLAMP (L:100)	1	
5	09408-00184	CLAMP	1	
6	33930-88LL0	UNIT, ENGINE CONTROL	1	
7	33925-88L10	CUSHION, ENGINE CONTROL UNIT	1	
8	09250-40002	CAP (OD:52)	1	

FIG.326C

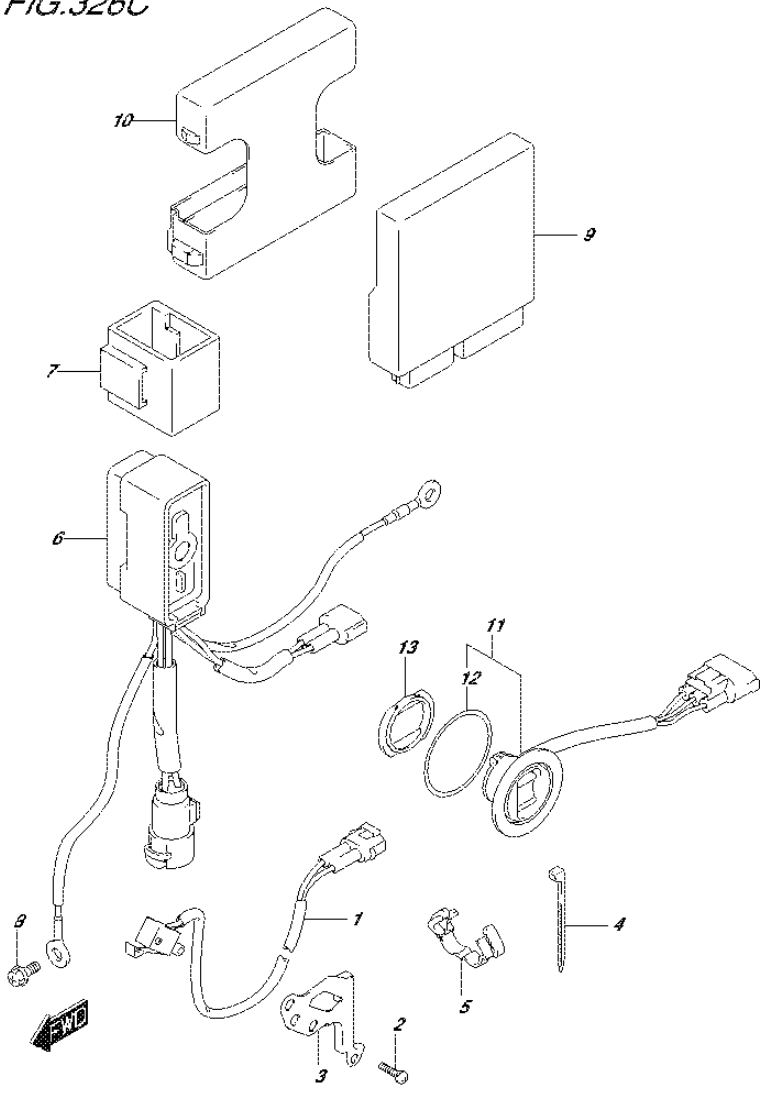

FIG.326C (2-I-15) PTT SWITCH/ENGINE CONTROL UNIT (DF40ATH E01)

REF NO.	PART NO.	DESCRIPTION	Q'TY	REMARKS
1	37721-93J00	SWITCH ASSY, NEUTRAL	1	
2	09137-04004	SCREW (4X16)	2	
3	37725-88L00	BRACKET, NEUTRAL SWITCH	1	
4	09407-10404	CLAMP (L:100)	1	
5	09408-00184	CLAMP	1	
6	38410-93J12	RELAY ASSY, PTT	1	
7	38415-93J00	HOLDER, PTT RELAY	1	
8	01550-06127	BOLT	1	
9	33930-88LL0	UNIT, ENGINE CONTROL	1	
10	33925-88L10	CUSHION, ENGINE CONTROL UNIT	1	
11	37850-92J00	SWITCH ASSY, PTT	1	
12	37856-92J00	.TAPE, PTT SWITCH	1	
13	37857-92J00	BUSH, PTT SWITH	1	

DF60A_E01_016_326C
PTT SWITCH/ENGINE CONTROL UNIT

FIG.326D

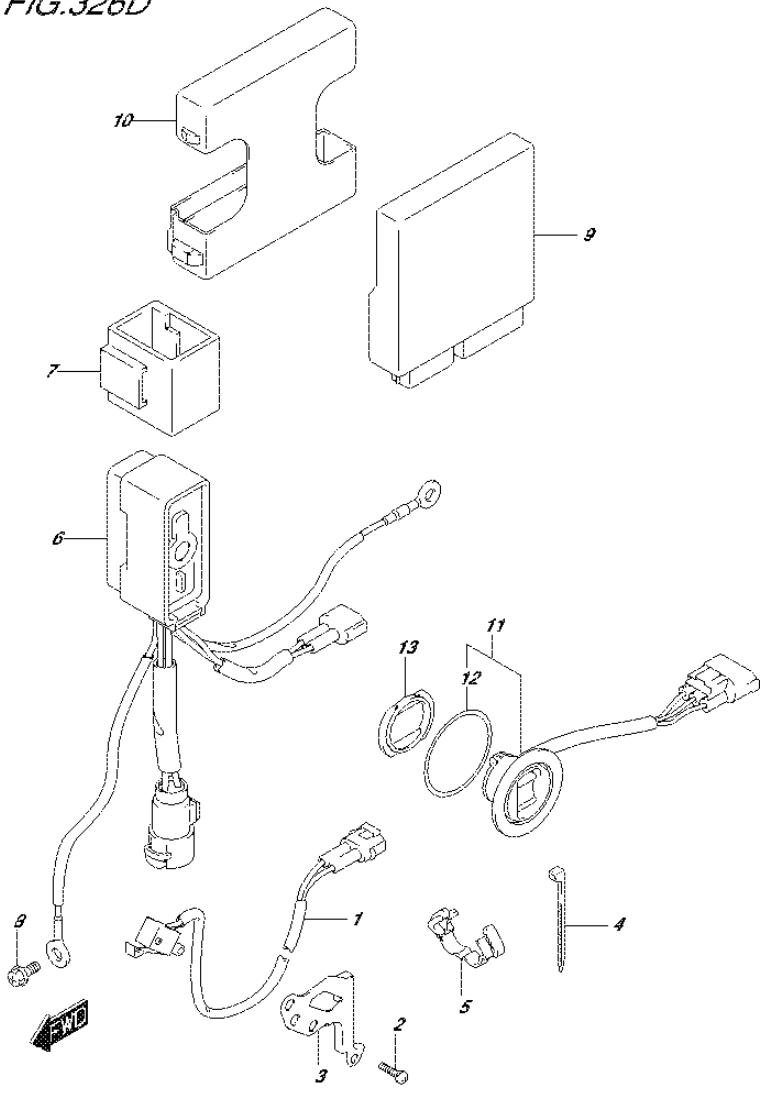

FIG.326D (2-J-2) PTT SWITCH/ENGINE CONTROL UNIT (DF40AST E34)

REF NO.	PART NO.	DESCRIPTION	Q'TY	REMARKS
1	37721-93J00	SWITCH ASSY, NEUTRAL	1	
2	09137-04004	SCREW (4X16)	2	
3	37725-88L00	BRACKET, NEUTRAL SWITCH	1	
4	09407-10404	CLAMP (L:100)	1	
5	09408-00184	CLAMP	1	
6	38410-93J12	RELAY ASSY, PTT	1	
7	38415-93J00	HOLDER, PTT RELAY	1	
8	01550-06127	BOLT	1	
9	33930-88LM0	UNIT, ENGINE CONTROL	1	
10	33925-88L10	CUSHION, ENGINE CONTROL UNIT	1	
11	37850-92J00	SWITCH ASSY, PTT	1	
12	37856-92J00	.TAPE, PTT SWITCH	1	
13	37857-92J00	BUSH, PTT SWITH	1	

FIG.326E

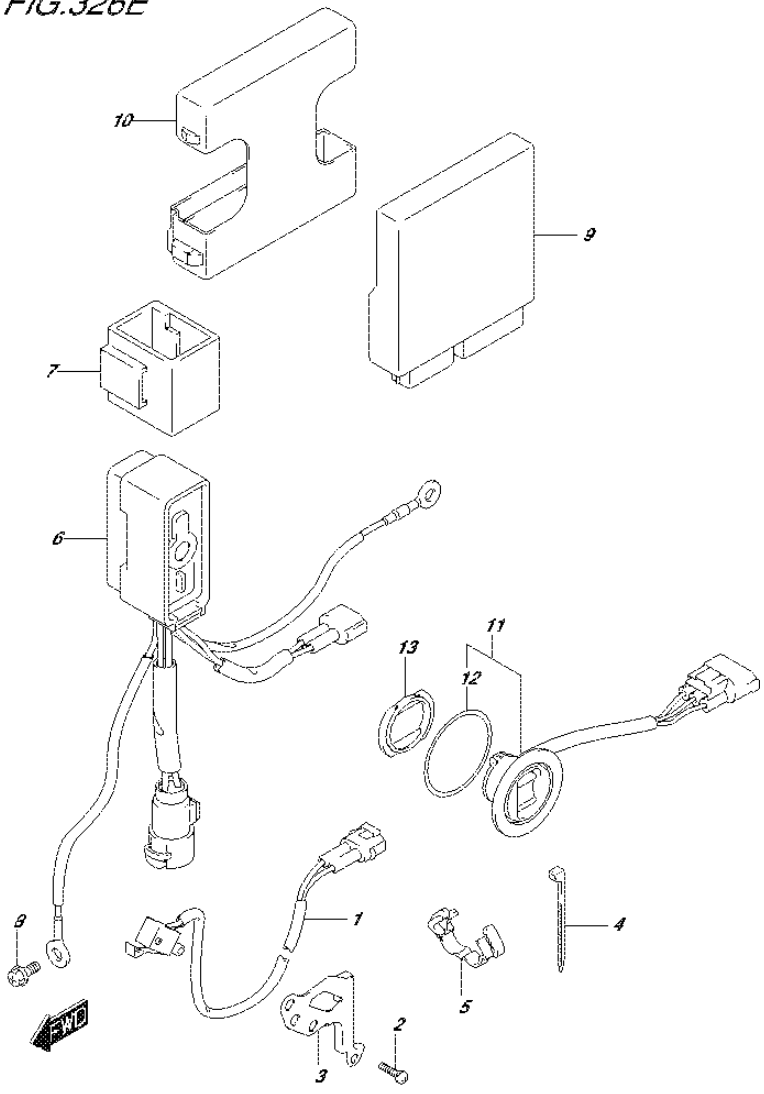

FIG.326E (2-J-3) PTT SWITCH/ENGINE CONTROL UNIT (DF50A E01)

REF NO.	PART NO.	DESCRIPTION	Q'TY	REMARKS
1	37721-93J00	SWITCH ASSY, NEUTRAL	1	
2	09137-04004	SCREW (4X16)	2	
3	37725-88L00	BRACKET, NEUTRAL SWITCH	1	
4	09407-10404	CLAMP (L:100)	1	
5	09408-00184	CLAMP	1	
6	38410-93J12	RELAY ASSY, PTT	1	
7	38415-93J00	HOLDER, PTT RELAY	1	
8	01550-06127	BOLT	1	
9	33930-88LN0	UNIT, ENGINE CONTROL	1	
10	33925-88L10	CUSHION, ENGINE CONTROL UNIT	1	
11	37850-92J00	SWITCH ASSY, PTT	1	
12	37856-92J00	.TAPE, PTT SWITCH	1	
13	37857-92J00	BUSH, PTT SWITH	1	

FIG.326F

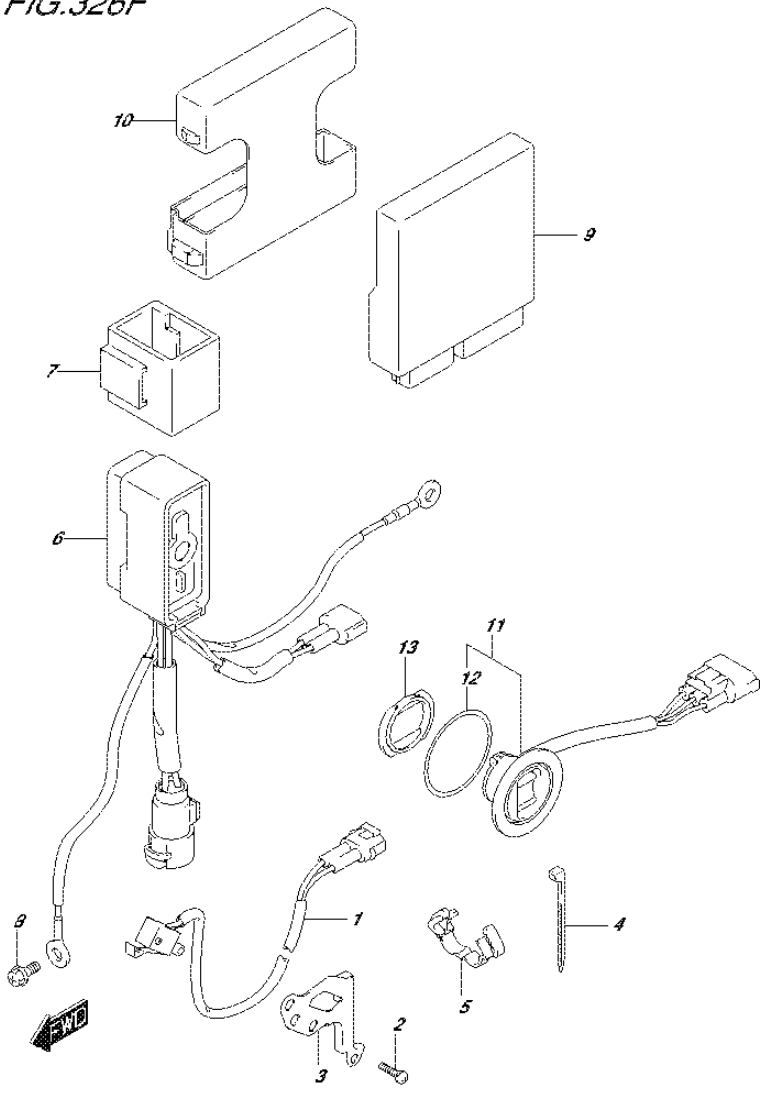

FIG.326F (2-J-4) PTT SWITCH/ENGINE CONTROL UNIT (DF50ATH E01)

REF NO.	PART NO.	DESCRIPTION	Q'TY	REMARKS
1	37721-93J00	SWITCH ASSY, NEUTRAL	1	
2	09137-04004	SCREW (4X16)	2	
3	37725-88L00	BRACKET, NEUTRAL SWITCH	1	
4	09407-10404	CLAMP (L:100)	1	
5	09408-00184	CLAMP	1	
6	38410-93J12	RELAY ASSY, PTT	1	
7	38415-93J00	HOLDER, PTT RELAY	1	
8	01550-06127	BOLT	1	
9	33930-88LN0	UNIT, ENGINE CONTROL	1	
10	33925-88L10	CUSHION, ENGINE CONTROL UNIT	1	
11	37850-92J00	SWITCH ASSY, PTT	1	
12	37856-92J00	.TAPE, PTT SWITCH	1	
13	37857-92J00	BUSH, PTT SWITH	1	

FIG.326G

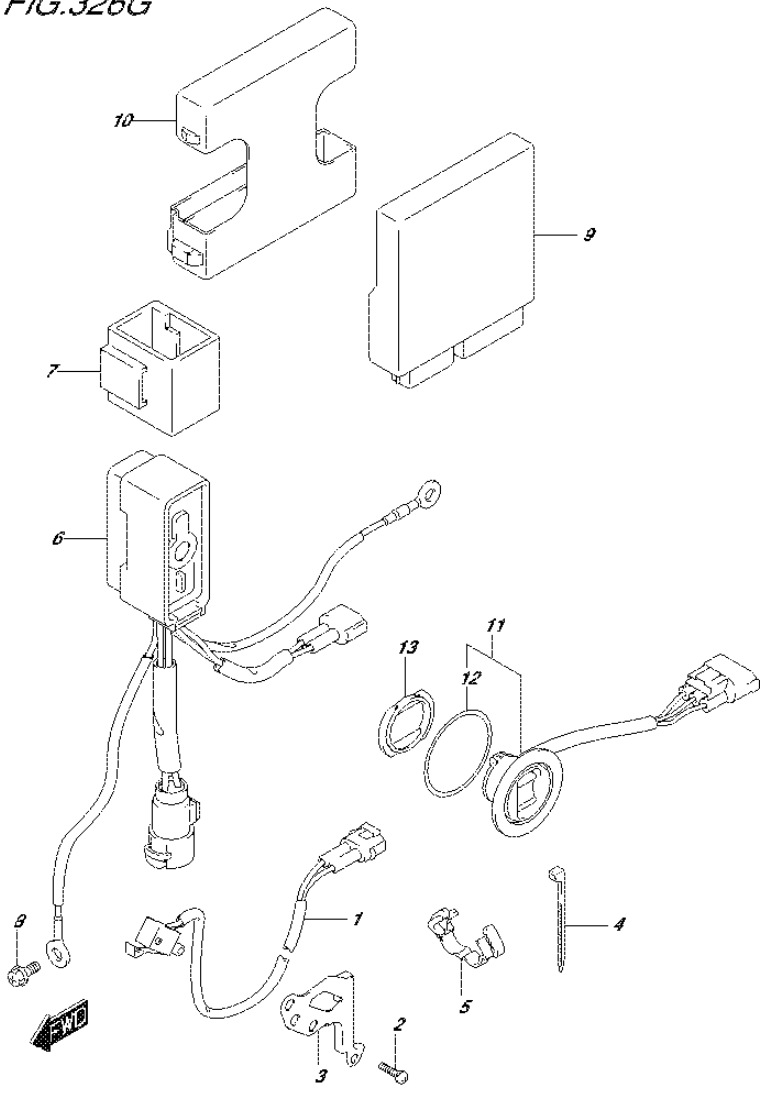

FIG.326G (2-J-5) PTT SWITCH/ENGINE CONTROL UNIT (DF60A E01)

REF NO.	PART NO.	DESCRIPTION	Q'TY	REMARKS
1	37721-93J00	SWITCH ASSY, NEUTRAL	1	
2	09137-04004	SCREW (4X16)	2	
3	37725-88L00	BRACKET, NEUTRAL SWITCH	1	
4	09407-10404	CLAMP (L:100)	1	
5	09408-00184	CLAMP	1	
6	38410-93J12	RELAY ASSY, PTT	1	
7	38415-93J00	HOLDER, PTT RELAY	1	
8	01550-06127	BOLT	1	
9	33930-88LJ0	UNIT, ENGINE CONTROL	1	
10	33925-88L10	CUSHION, ENGINE CONTROL UNIT	1	
11	37850-92J00	SWITCH ASSY, PTT	1	
12	37856-92J00	.TAPE, PTT SWITCH	1	
13	37857-92J00	BUSH, PTT SWITH	1	

FIG.326H

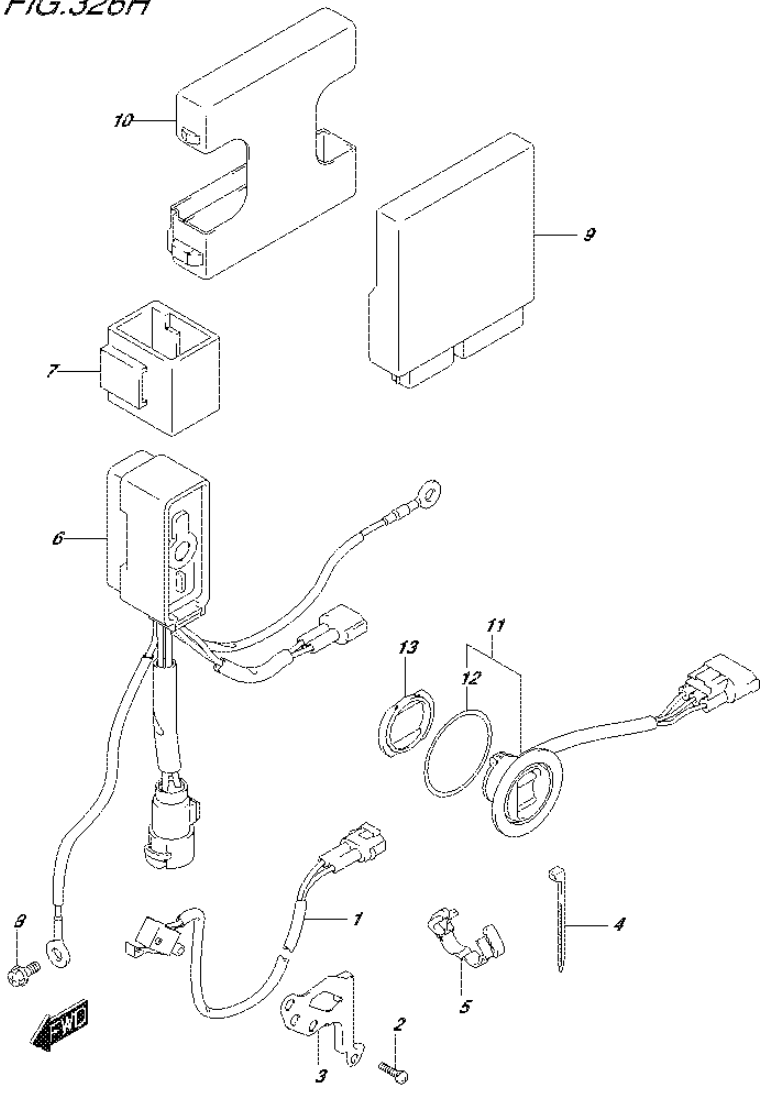

FIG.326H (2-J-6) PTT SWITCH/ENGINE CONTROL UNIT (DF60A E40)

REF NO.	PART NO.	DESCRIPTION	Q'TY	REMARKS
1	37721-93J00	SWITCH ASSY, NEUTRAL	1	
2	09137-04004	SCREW (4X16)	2	
3	37725-88L00	BRACKET, NEUTRAL SWITCH	1	
4	09407-10404	CLAMP (L:100)	1	
5	09408-00184	CLAMP	1	
6	38410-93J12	RELAY ASSY, PTT	1	
7	38415-93J00	HOLDER, PTT RELAY	1	
8	01550-06127	BOLT	1	
9	33930-88LK0	UNIT, ENGINE CONTROL	1	
10	33925-88L10	CUSHION, ENGINE CONTROL UNIT	1	
11	37850-92J00	SWITCH ASSY, PTT	1	
12	37856-92J00	.TAPE, PTT SWITCH	1	
13	37857-92J00	BUSH, PTT SWITH	1	

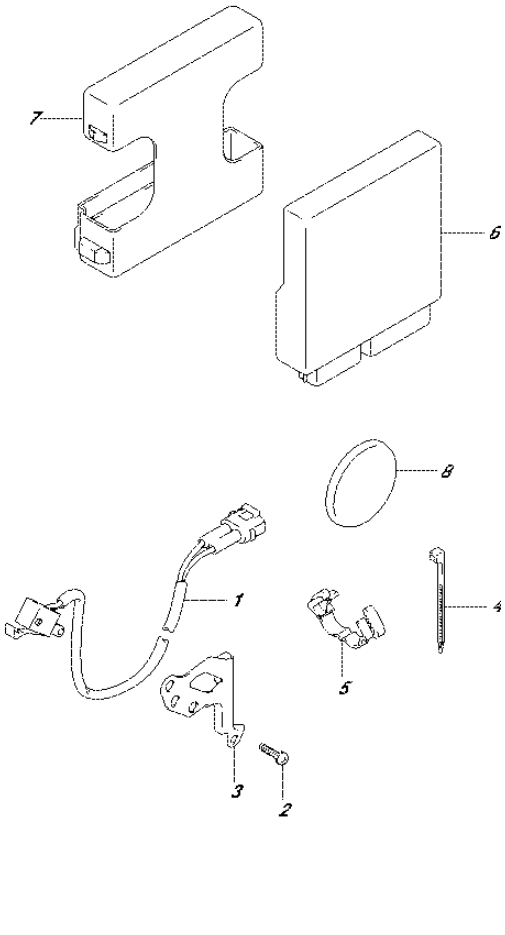

FIG.326J (2-J-7) PTT SWITCH/ENGINE CONTROL UNIT (DF60AQH E01)

REF NO.	PART NO.	DESCRIPTION	Q'TY	REMARKS
1	37721-93J00	SWITCH ASSY, NEUTRAL	1	
2	09137-04004	SCREW (4X16)	2	
3	37725-88L00	BRACKET, NEUTRAL SWITCH	1	
4	09407-10404	CLAMP (L:100)	1	
5	09408-00184	CLAMP	1	
6	33930-88LJ0	UNIT, ENGINE CONTROL	1	
7	33925-88L10	CUSHION, ENGINE CONTROL UNIT	1	
8	09250-40002	CAP (OD:52)	1	

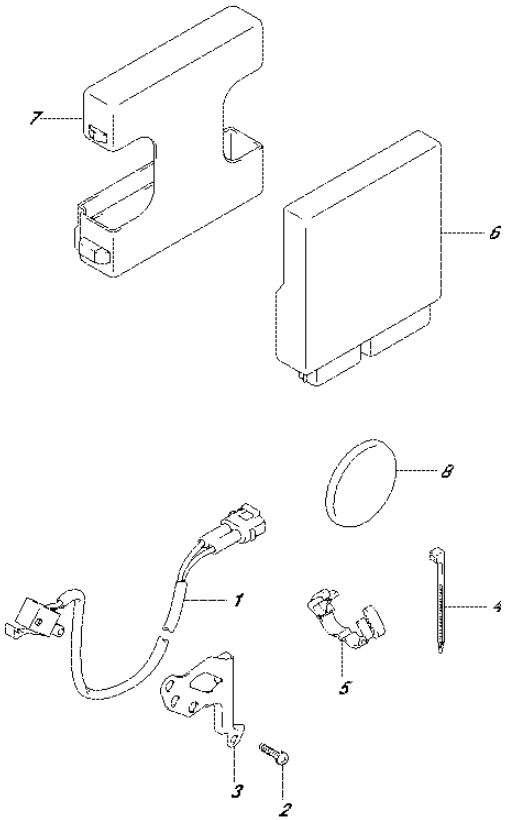

FIG.326K (2-J-8) PTT SWITCH/ENGINE CONTROL UNIT (DF60AQH E40)

REF NO.	PART NO.	DESCRIPTION	Q'TY	REMARKS
1	37721-93J00	SWITCH ASSY, NEUTRAL	1	
2	09137-04004	SCREW (4X16)	2	
3	37725-88L00	BRACKET, NEUTRAL SWITCH	1	
4	09407-10404	CLAMP (L:100)	1	
5	09408-00184	CLAMP	1	
6	33930-88LK0	UNIT, ENGINE CONTROL	1	
7	33925-88L10	CUSHION, ENGINE CONTROL UNIT	1	
8	09250-40002	CAP (OD:52)	1	

FIG.326L

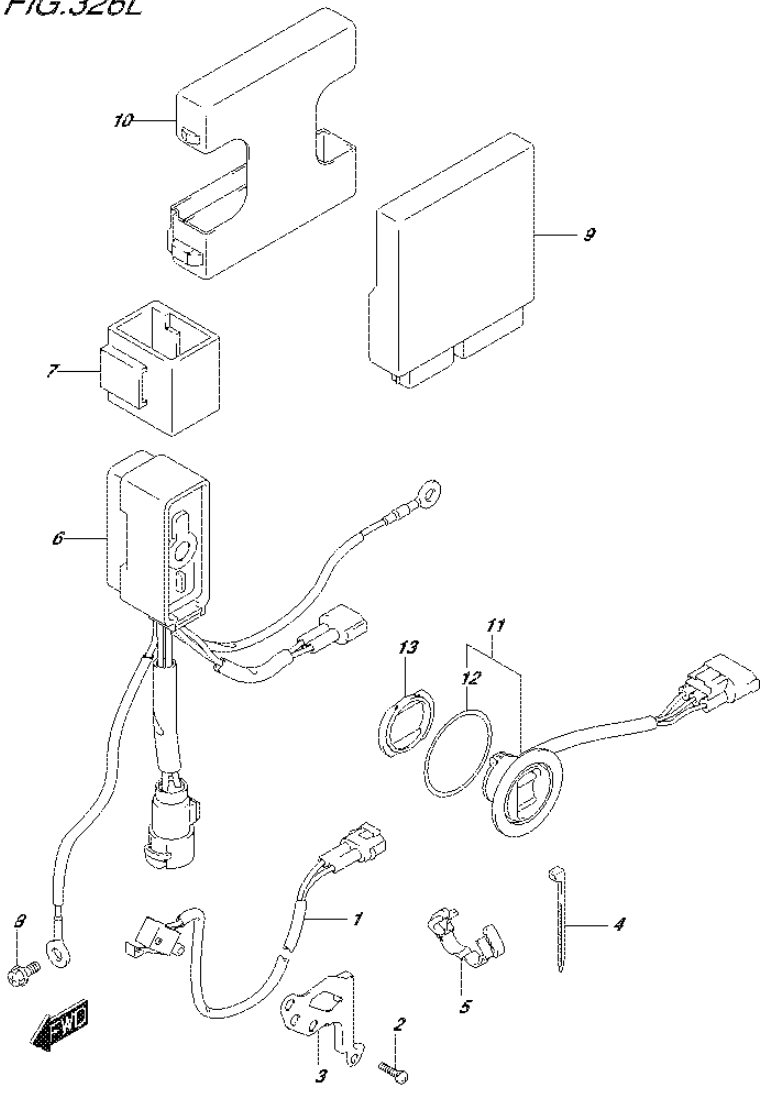

FIG.326L (2-J-9) PTT SWITCH/ENGINE CONTROL UNIT (DF60ATH E01)

REF NO.	PART NO.	DESCRIPTION	Q'TY	REMARKS
1	37721-93J00	SWITCH ASSY, NEUTRAL	1	
2	09137-04004	SCREW (4X16)	2	
3	37725-88L00	BRACKET, NEUTRAL SWITCH	1	
4	09407-10404	CLAMP (L:100)	1	
5	09408-00184	CLAMP	1	
6	38410-93J12	RELAY ASSY, PTT	1	
7	38415-93J00	HOLDER, PTT RELAY	1	
8	01550-06127	BOLT	1	
9	33930-88LJ0	UNIT, ENGINE CONTROL	1	
10	33925-88L10	CUSHION, ENGINE CONTROL UNIT	1	
11	37850-92J00	SWITCH ASSY, PTT	1	
12	37856-92J00	.TAPE, PTT SWITCH	1	
13	37857-92J00	BUSH, PTT SWITH	1	

FIG.326M

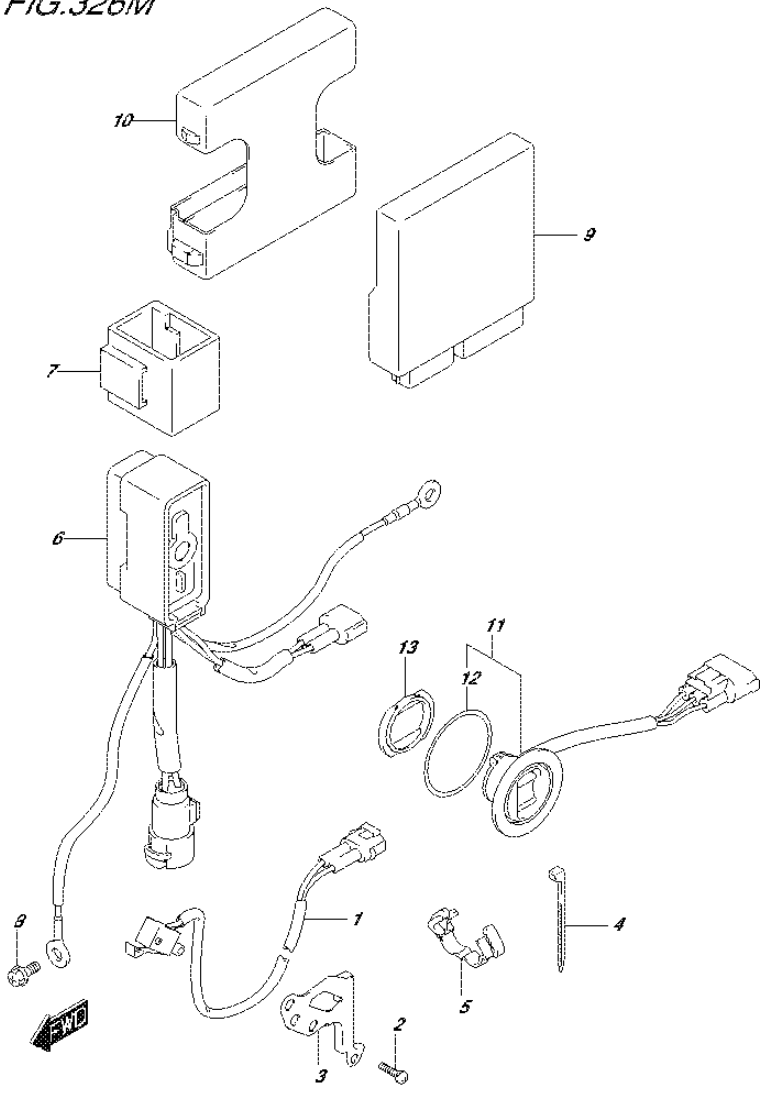

FIG.326M (2-J-10) PTT SWITCH/ENGINE CONTROL UNIT (DF60ATH E40)

REF NO.	PART NO.	DESCRIPTION	Q'TY	REMARKS
1	37721-93J00	SWITCH ASSY, NEUTRAL	1	
2	09137-04004	SCREW (4X16)	2	
3	37725-88L00	BRACKET, NEUTRAL SWITCH	1	
4	09407-10404	CLAMP (L:100)	1	
5	09408-00184	CLAMP	1	
6	38410-93J12	RELAY ASSY, PTT	1	
7	38415-93J00	HOLDER, PTT RELAY	1	
8	01550-06127	BOLT	1	
9	33930-88LK0	UNIT, ENGINE CONTROL	1	
10	33925-88L10	CUSHION, ENGINE CONTROL UNIT	1	
11	37850-92J00	SWITCH ASSY, PTT	1	
12	37856-92J00	.TAPE, PTT SWITCH	1	
13	37857-92J00	BUSH, PTT SWITH	1	

FIG.326N

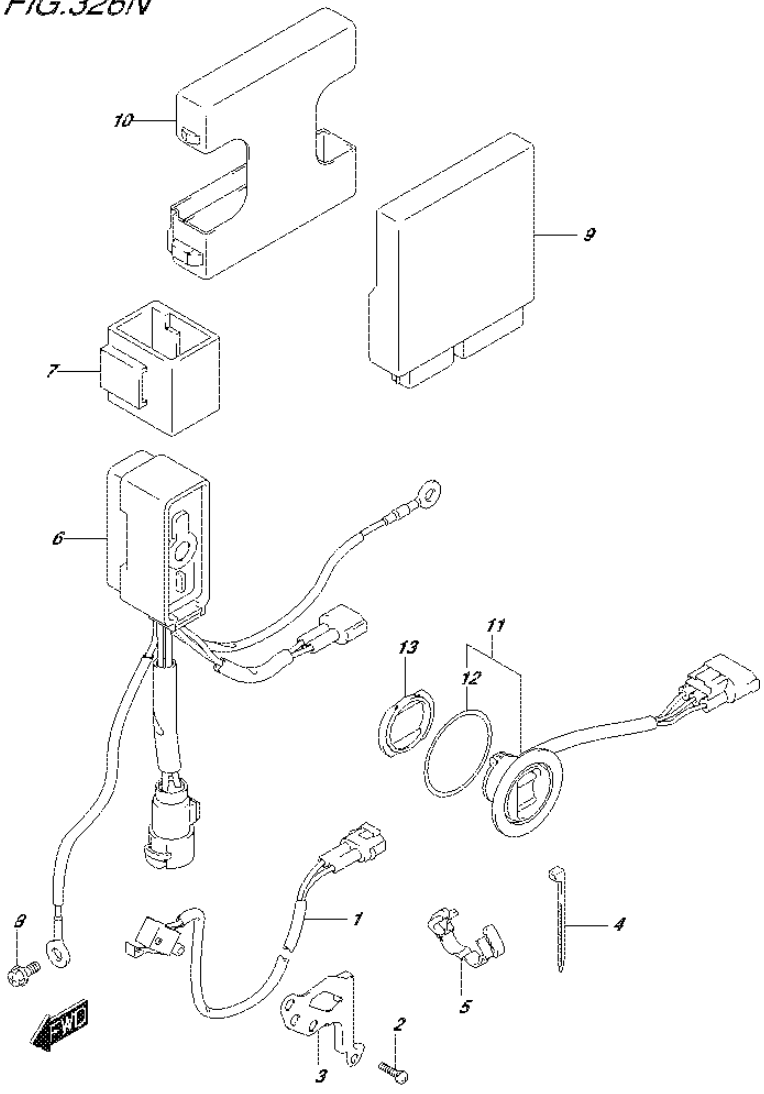

FIG.326N (2-J-11) PTT SWITCH/ENGINE CONTROL UNIT (DF50AVT E01)

REF NO.	PART NO.	DESCRIPTION	Q'TY	REMARKS
1	37721-93J00	SWITCH ASSY, NEUTRAL	1	
2	09137-04004	SCREW (4X16)	2	
3	37725-88L00	BRACKET, NEUTRAL SWITCH	1	
4	09407-10404	CLAMP (L:100)	1	
5	09408-00184	CLAMP	1	
6	38410-93J12	RELAY ASSY, PTT	1	
7	38415-93J00	HOLDER, PTT RELAY	1	
8	01550-06127	BOLT	1	
9	33930-88LR0	UNIT, ENGINE CONTROL	1	
10	33925-88L10	CUSHION, ENGINE CONTROL UNIT	1	
11	37850-92J00	SWITCH ASSY, PTT	1	
12	37856-92J00	.TAPE, PTT SWITCH	1	
13	37857-92J00	BUSH, PTT SWITH	1	

FIG.326P

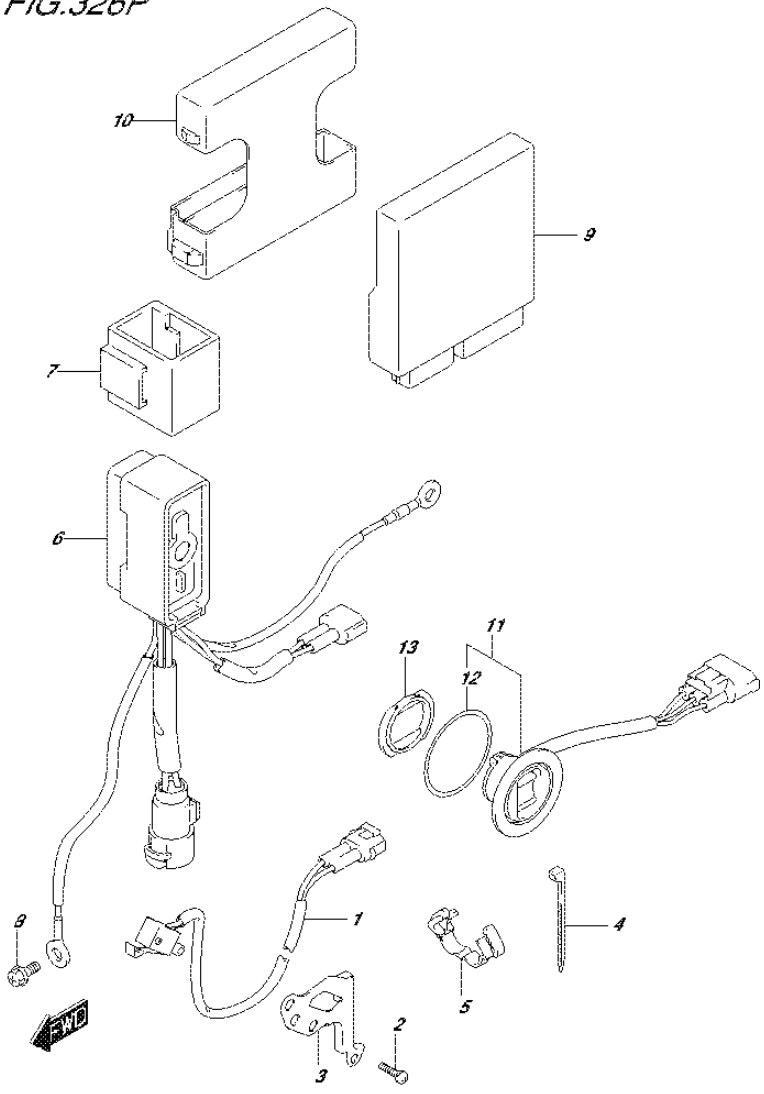

FIG.326P (2-J-12) PTT SWITCH/ENGINE CONTROL UNIT (DF50AVTH E01)

REF NO.	PART NO.	DESCRIPTION	Q'TY	REMARKS
1	37721-93J00	SWITCH ASSY, NEUTRAL	1	
2	09137-04004	SCREW (4X16)	2	
3	37725-88L00	BRACKET, NEUTRAL SWITCH	1	
4	09407-10404	CLAMP (L:100)	1	
5	09408-00184	CLAMP	1	
6	38410-93J12	RELAY ASSY, PTT	1	
7	38415-93J00	HOLDER, PTT RELAY	1	
8	01550-06127	BOLT	1	
9	33930-88LR0	UNIT, ENGINE CONTROL	1	
10	33925-88L10	CUSHION, ENGINE CONTROL UNIT	1	
11	37850-92J00	SWITCH ASSY, PTT	1	
12	37856-92J00	.TAPE, PTT SWITCH	1	
13	37857-92J00	BUSH, PTT SWITH	1	

DF60A_E01_016_326P
PTT SWITCH/ENGINE CONTROL UNIT

FIG.326R

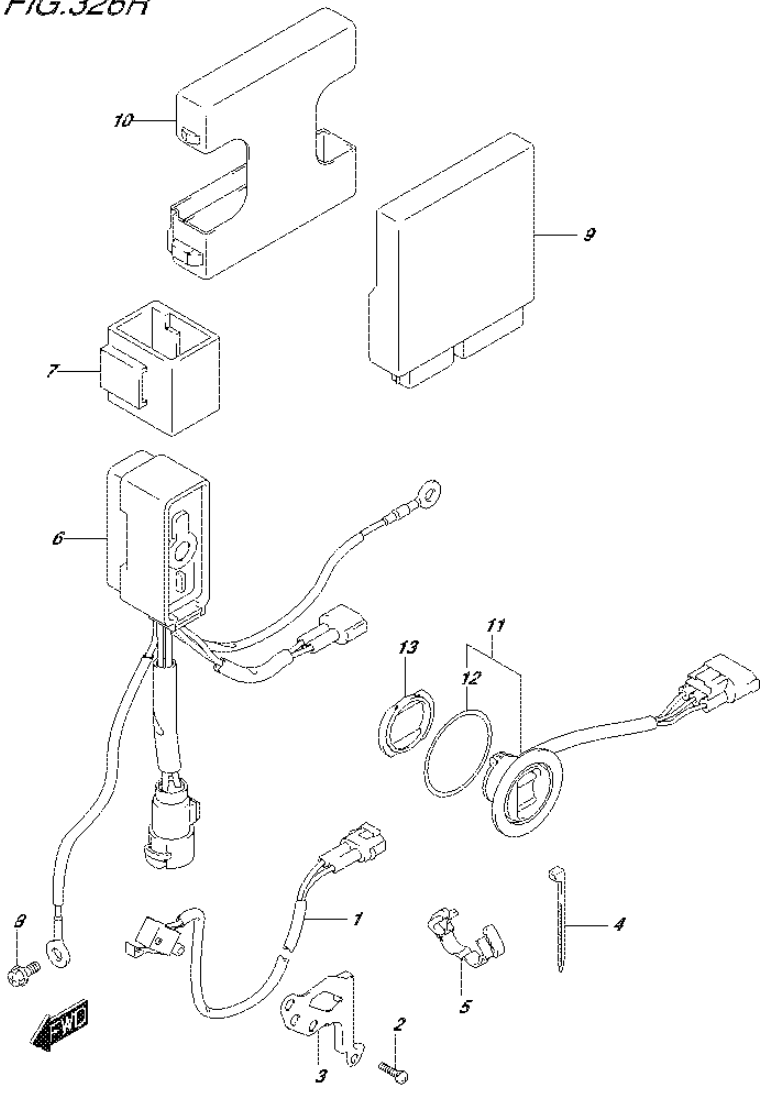

FIG.326R (2-J-13) PTT SWITCH/ENGINE CONTROL UNIT (DF60AVT E01)

REF NO.	PART NO.	DESCRIPTION	Q'TY	REMARKS
1	37721-93J00	SWITCH ASSY, NEUTRAL	1	
2	09137-04004	SCREW (4X16)	2	
3	37725-88L00	BRACKET, NEUTRAL SWITCH	1	
4	09407-10404	CLAMP (L:100)	1	
5	09408-00184	CLAMP	1	
6	38410-93J12	RELAY ASSY, PTT	1	
7	38415-93J00	HOLDER, PTT RELAY	1	
8	01550-06127	BOLT	1	
9	33930-88LP0	UNIT, ENGINE CONTROL	1	
10	33925-88L10	CUSHION, ENGINE CONTROL UNIT	1	
11	37850-92J00	SWITCH ASSY, PTT	1	
12	37856-92J00	.TAPE, PTT SWITCH	1	
13	37857-92J00	BUSH, PTT SWITH	1	

FIG.326S

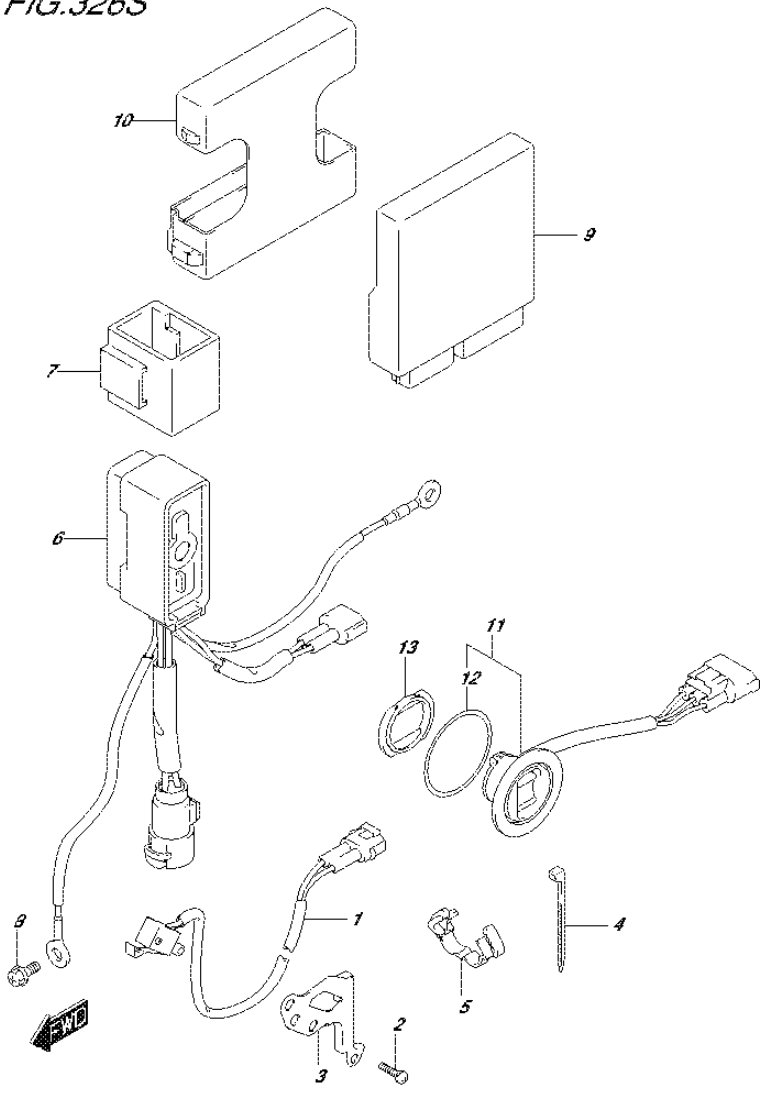

FIG.326S (2-J-14) PTT SWITCH/ENGINE CONTROL UNIT (DF60AVT E40)

REF NO.	PART NO.	DESCRIPTION	Q'TY	REMARKS
1	37721-93J00	SWITCH ASSY, NEUTRAL	1	
2	09137-04004	SCREW (4X16)	2	
3	37725-88L00	BRACKET, NEUTRAL SWITCH	1	
4	09407-10404	CLAMP (L:100)	1	
5	09408-00184	CLAMP	1	
6	38410-93J12	RELAY ASSY, PTT	1	
7	38415-93J00	HOLDER, PTT RELAY	1	
8	01550-06127	BOLT	1	
9	33930-88LQ0	UNIT, ENGINE CONTROL	1	
10	33925-88L10	CUSHION, ENGINE CONTROL UNIT	1	
11	37850-92J00	SWITCH ASSY, PTT	1	
12	37856-92J00	.TAPE, PTT SWITCH	1	
13	37857-92J00	BUSH, PTT SWITH	1	

FIG.326T

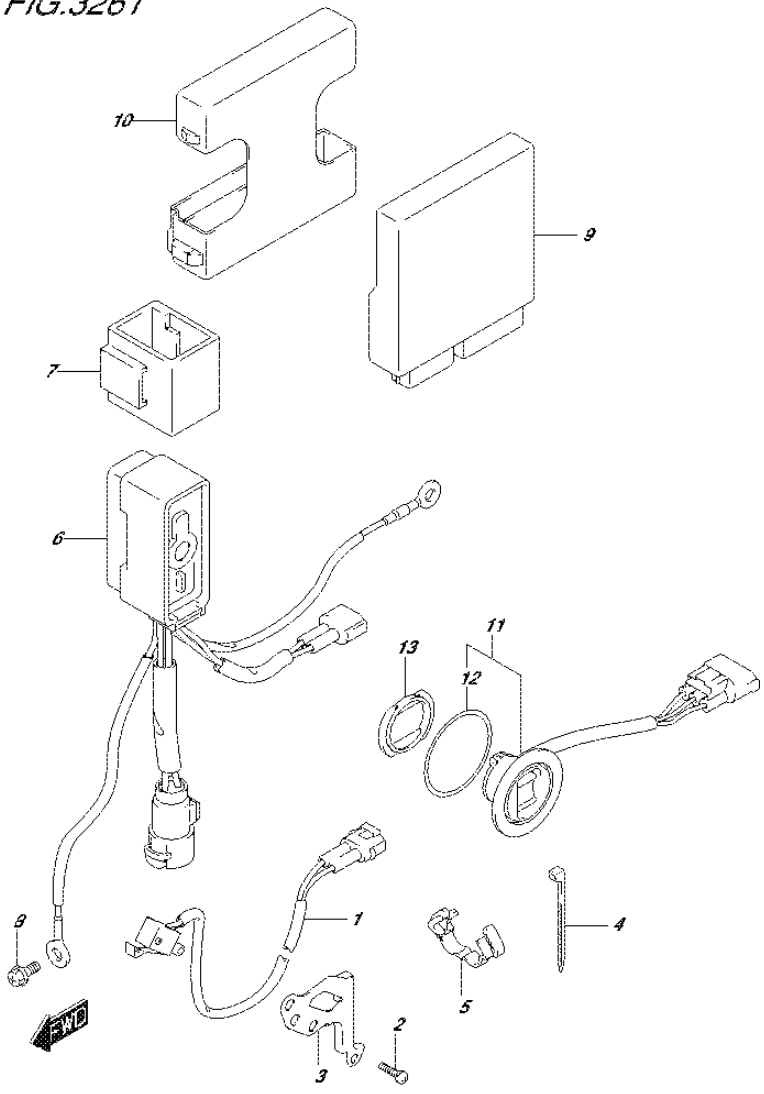

FIG.326T (2-J-15) PTT SWITCH/ENGINE CONTROL UNIT (DF60AVTH E01)

REF NO.	PART NO.	DESCRIPTION	Q'TY	REMARKS
1	37721-93J00	SWITCH ASSY, NEUTRAL	1	
2	09137-04004	SCREW (4X16)	2	
3	37725-88L00	BRACKET, NEUTRAL SWITCH	1	
4	09407-10404	CLAMP (L:100)	1	
5	09408-00184	CLAMP	1	
6	38410-93J12	RELAY ASSY, PTT	1	
7	38415-93J00	HOLDER, PTT RELAY	1	
8	01550-06127	BOLT	1	
9	33930-88LP0	UNIT, ENGINE CONTROL	1	
10	33925-88L10	CUSHION, ENGINE CONTROL UNIT	1	
11	37850-92J00	SWITCH ASSY, PTT	1	
12	37856-92J00	.TAPE, PTT SWITCH	1	
13	37857-92J00	BUSH, PTT SWITH	1	

DF60A_E01_016_326T
PTT SWITCH/ENGINE CONTROL UNIT

FIG.326U

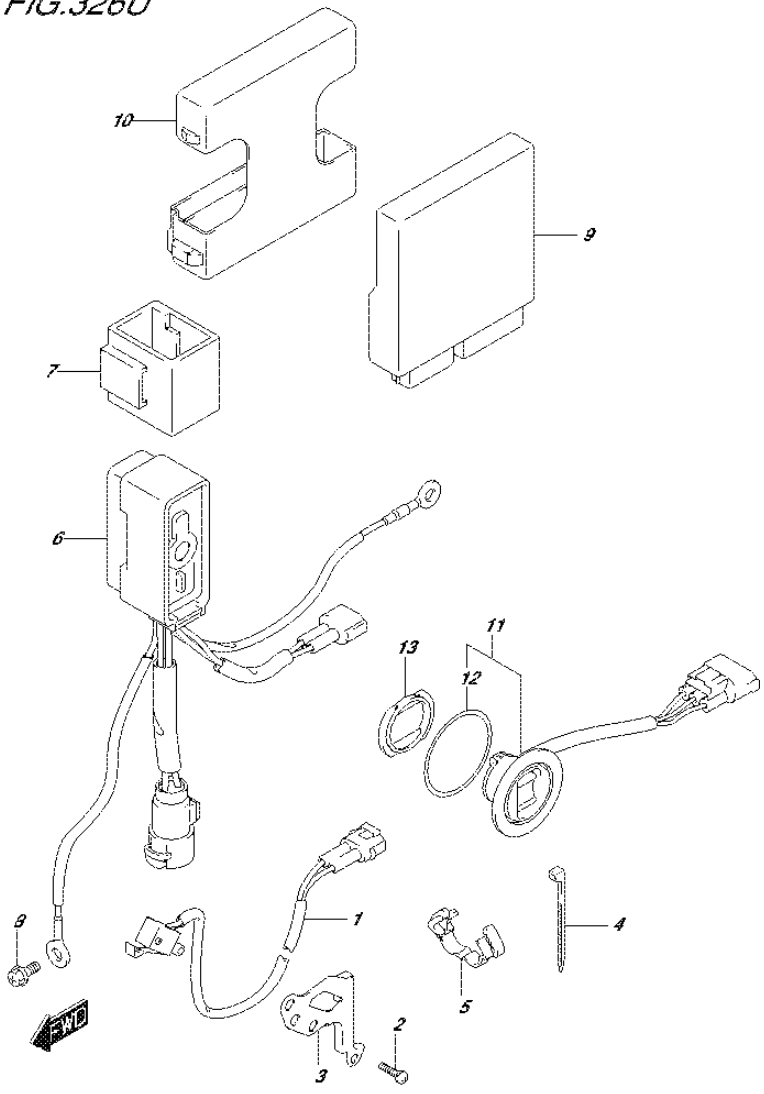

FIG.326U (2-K-2) PTT SWITCH/ENGINE CONTROL UNIT (DF60AVTH E40)

REF NO.	PART NO.	DESCRIPTION	Q'TY	REMARKS
1	37721-93J00	SWITCH ASSY, NEUTRAL	1	
2	09137-04004	SCREW (4X16)	2	
3	37725-88L00	BRACKET, NEUTRAL SWITCH	1	
4	09407-10404	CLAMP (L:100)	1	
5	09408-00184	CLAMP	1	
6	38410-93J12	RELAY ASSY, PTT	1	
7	38415-93J00	HOLDER, PTT RELAY	1	
8	01550-06127	BOLT	1	
9	33930-88LQ0	UNIT, ENGINE CONTROL	1	
10	33925-88L10	CUSHION, ENGINE CONTROL UNIT	1	
11	37850-92J00	SWITCH ASSY, PTT	1	
12	37856-92J00	.TAPE, PTT SWITCH	1	
13	37857-92J00	BUSH, PTT SWITH	1	

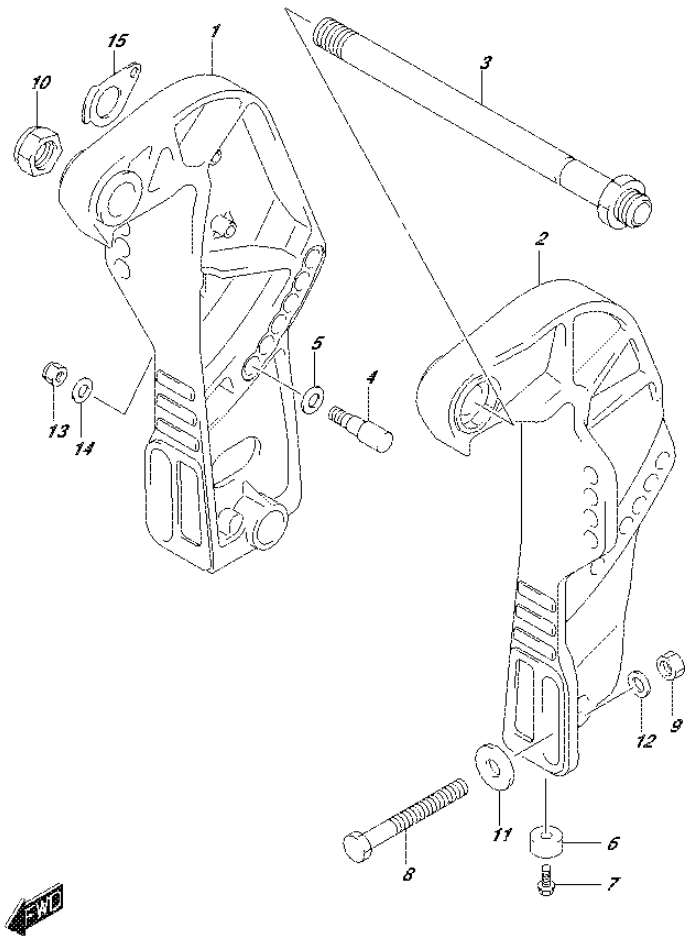

FIG.335A (2-K-3) CLAMP BRACKET (DF40A E01)

REF NO.	PART NO.	DESCRIPTION	Q'TY	REMARKS
1-1	41111-88L20-0EP	BRACKET, CLAMP STBD (BLACK)	1	
1-2	41111-88L20-Y5S	BRACKET, CLAMP STBD (WHITE)	1	
2-1	41121-88L10-0EP	BRACKET, CLAMP PORT (BLACK)	1	
2-2	41121-88L10-Y5S	BRACKET, CLAMP PORT (WHITE)	1	
3	41130-87J11	SHAFT, CLAMP BRACKET	1	
4	45421-89J00	PIN, TILT LOCK	2	
5	09160-12066	WASHER (12.5X22X2.5)	2	
6	55321-87J00	ANODE, PROTECTION	2	
7	09103-06281	BOLT (6X14)	2	
8-1	09100-12093	BOLT (12X100)	4	
8-2	09100-12091	BOLT (12X115)	1	OPT
9	09159-12014	NUT	4	
10	09159-22006	NUT	1	
11	09160-12044	WASHER (12.5X35X3.2)	4	
12	09160-12126	WASHER	4	
13	09159-10050	NUT	2	
14	09160-10082	WASHER (10.5X19X2)	2	
15	41135-93J00	WASHER, CLAMP BRACKET SHAFT	1	

FIG.335B

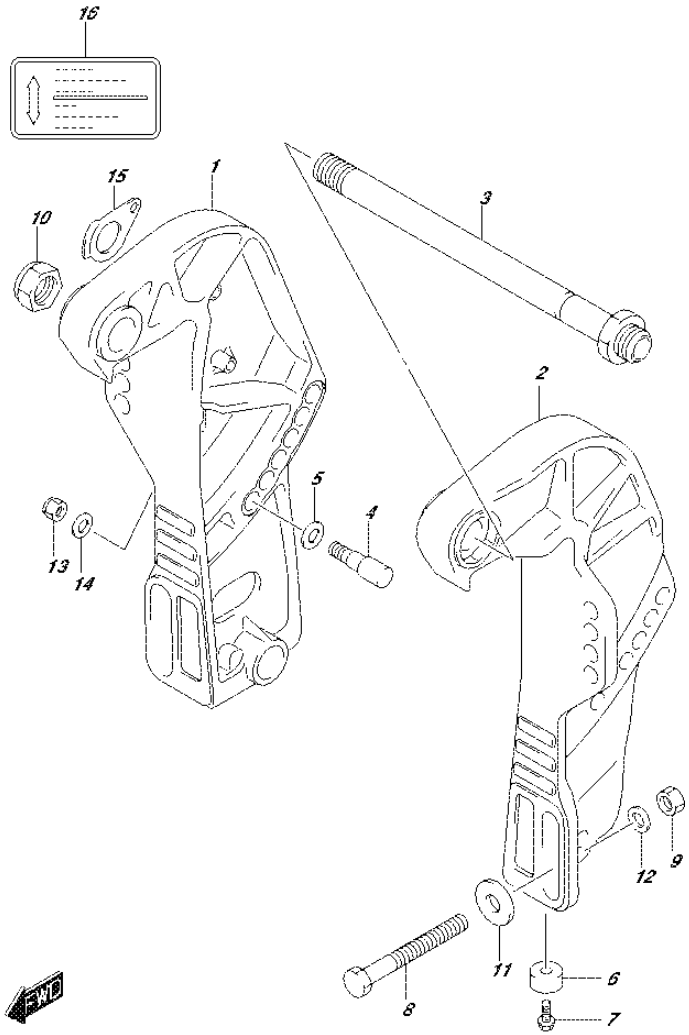

FIG.335B (2-K-4) CLAMP BRACKET (DF40AQH E01)

REF NO.	PART NO.	DESCRIPTION	Q'TY	REMARKS
1	41111-88L20-0EP	BRACKET, CLAMP STBD (BLACK)	1	
2	41121-88L10-0EP	BRACKET, CLAMP PORT (BLACK)	1	
3	41130-87J11	SHAFT, CLAMP BRACKET	1	
4	45421-89J00	PIN, TILT LOCK	2	
5	09160-12066	WASHER (12.5X22X2.5)	2	
6	55321-87J00	ANODE, PROTECTION	2	
7	09103-06281	BOLT (6X14)	2	
8-1	09100-12093	BOLT (12X100)	4	
8-2	09100-12091	BOLT (12X115)	1	OPT
9	09159-12014	NUT	4	
10	09159-22006	NUT	1	
11	09160-12044	WASHER (12.5X35X3.2)	4	
12	09160-12126	WASHER	4	
13	09159-10050	NUT	2	
14	09160-10082	WASHER (10.5X19X2)	2	
15	41135-93J00	WASHER, CLAMP BRACKET SHAFT	1	
16	43241-87J00	MARK, RELEASE LEVER	1	

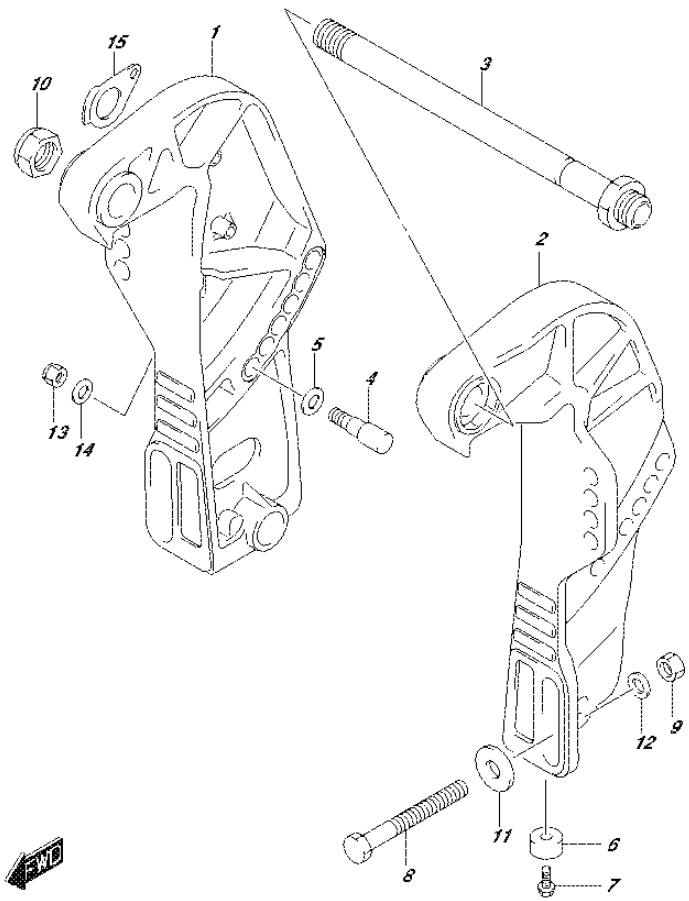

FIG.335C (2-K-5) CLAMP BRACKET (DF40ATH E01)

REF NO.	PART NO.	DESCRIPTION	Q'TY	REMARKS
1	41111-88L20-0EP	BRACKET, CLAMP STBD (BLACK)	1	
2	41121-88L10-0EP	BRACKET, CLAMP PORT (BLACK)	1	
3	41130-87J11	SHAFT, CLAMP BRACKET	1	
4	45421-89J00	PIN, TILT LOCK	2	
5	09160-12066	WASHER (12.5X22X2.5)	2	
6	55321-87J00	ANODE, PROTECTION	2	
7	09103-06281	BOLT (6X14)	2	
8-1	09100-12093	BOLT (12X100)	4	
8-2	09100-12091	BOLT (12X115)	1	OPT
9	09159-12014	NUT	4	
10	09159-22006	NUT	1	
11	09160-12044	WASHER (12.5X35X3.2)	4	
12	09160-12126	WASHER	4	
13	09159-10050	NUT	2	
14	09160-10082	WASHER (10.5X19X2)	2	
15	41135-93J00	WASHER, CLAMP BRACKET SHAFT	1	

FIG.335D

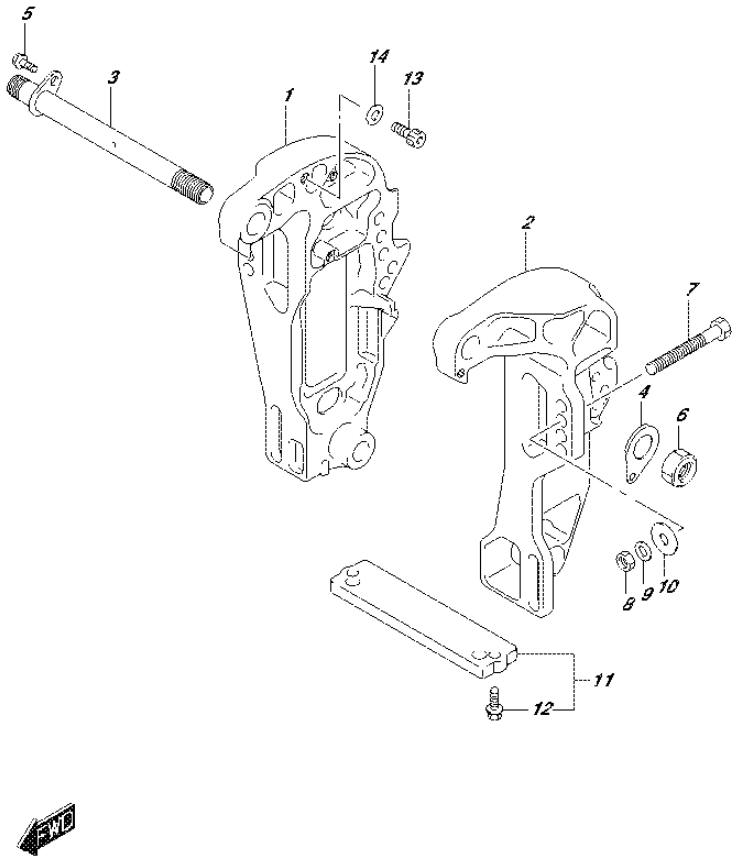

FIG.335D (2-K-6) CLAMP BRACKET (DF40AST E34)

REF NO.	PART NO.	DESCRIPTION	Q'TY	REMARKS
1-1	41111-88L10-0EP	BRACKET, CLAMP STBD (BLACK)	1	
1-2	41111-88L10-Y5S	BRACKET, CLAMP STBD (WHITE)	1	
2-1	41121-88L01-0EP	BRACKET, CLAMP PORT (BLACK)	1	
2-2	41121-88L01-Y5S	BRACKET, CLAMP PORT (WHITE)	1	
3	41130-88L10	SHAFT, CLAMP BRACKET	1	
4	41135-93J00	WASHER, CLAMP BRACKET SHAFT	1	
5	09116-08137	BOLT (8X22)	1	
6	09159-22006	NUT	1	
7-1	09100-12093	BOLT (12X100)	4	
7-2	09100-12091	BOLT (12X115)	1	OPT
8	09159-12014	NUT	4	
9	09160-12126	WASHER	4	
10	09160-12044	WASHER (12.5X35X3.2)	4	
11	55320-94900	ZINC, PROTECTION	1	
12	09116-06121	.BOLT (6X25)	2	
13	09106-10065	BOLT (10X20)	2	
14	09160-10082	WASHER (10.5X19X2)	2	

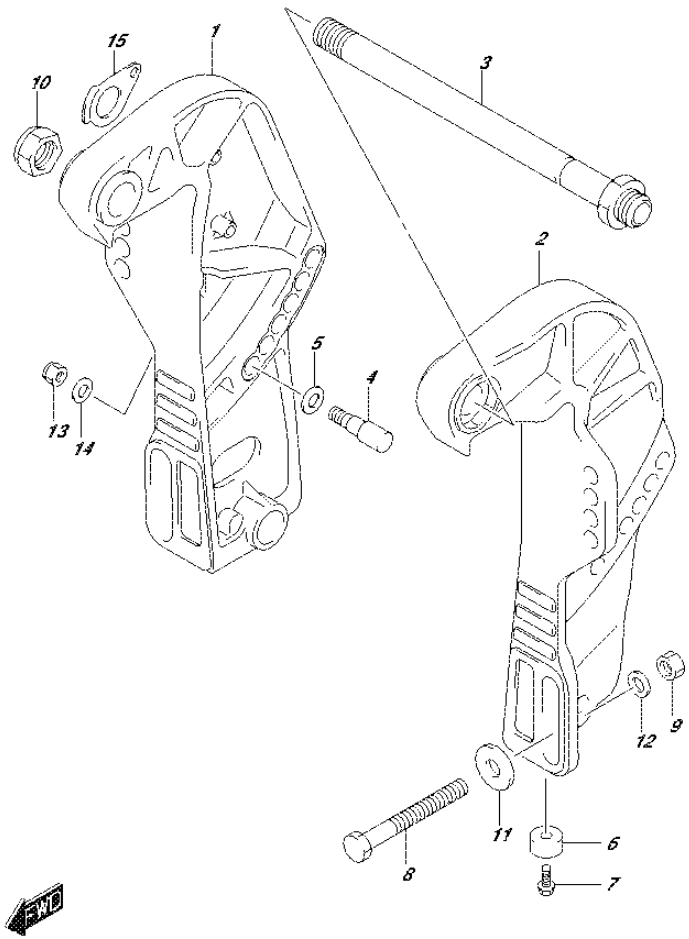

FIG.335E (2-K-7) CLAMP BRACKET (DF50A E01)

REF NO.	PART NO.	DESCRIPTION	Q'TY	REMARKS
1-1	41111-88L20-0EP	BRACKET, CLAMP STBD (BLACK)	1	
1-2	41111-88L20-Y5S	BRACKET, CLAMP STBD (WHITE)	1	
2-1	41121-88L10-0EP	BRACKET, CLAMP PORT (BLACK)	1	
2-2	41121-88L10-Y5S	BRACKET, CLAMP PORT (WHITE)	1	
3	41130-87J11	SHAFT, CLAMP BRACKET	1	
4	45421-89J00	PIN, TILT LOCK	2	
5	09160-12066	WASHER (12.5X22X2.5)	2	
6	55321-87J00	ANODE, PROTECTION	2	
7	09103-06281	BOLT (6X14)	2	
8-1	09100-12093	BOLT (12X100)	4	
8-2	09100-12091	BOLT (12X115)	1	OPT
9	09159-12014	NUT	4	
10	09159-22006	NUT	1	
11	09160-12044	WASHER (12.5X35X3.2)	4	
12	09160-12126	WASHER	4	
13	09159-10050	NUT	2	
14	09160-10082	WASHER (10.5X19X2)	2	
15	41135-93J00	WASHER, CLAMP BRACKET SHAFT	1	

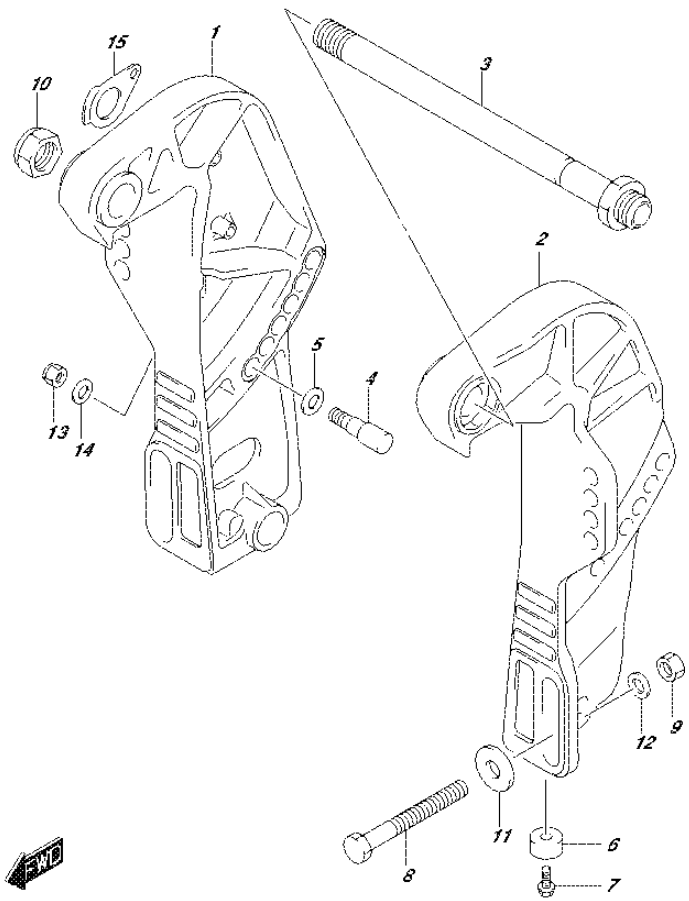

FIG.335F (2-K-8) CLAMP BRACKET (DF50ATH E01)

REF NO.	PART NO.	DESCRIPTION	Q'TY	REMARKS
1	41111-88L20-0EP	BRACKET, CLAMP STBD (BLACK)	1	
2	41121-88L10-0EP	BRACKET, CLAMP PORT (BLACK)	1	
3	41130-87J11	SHAFT, CLAMP BRACKET	1	
4	45421-89J00	PIN, TILT LOCK	2	
5	09160-12066	WASHER (12.5X22X2.5)	2	
6	55321-87J00	ANODE, PROTECTION	2	
7	09103-06281	BOLT (6X14)	2	
8-1	09100-12093	BOLT (12X100)	4	
8-2	09100-12091	BOLT (12X115)	1	OPT
9	09159-12014	NUT	4	
10	09159-22006	NUT	1	
11	09160-12044	WASHER (12.5X35X3.2)	4	
12	09160-12126	WASHER	4	
13	09159-10050	NUT	2	
14	09160-10082	WASHER (10.5X19X2)	2	
15	41135-93J00	WASHER, CLAMP BRACKET SHAFT	1	

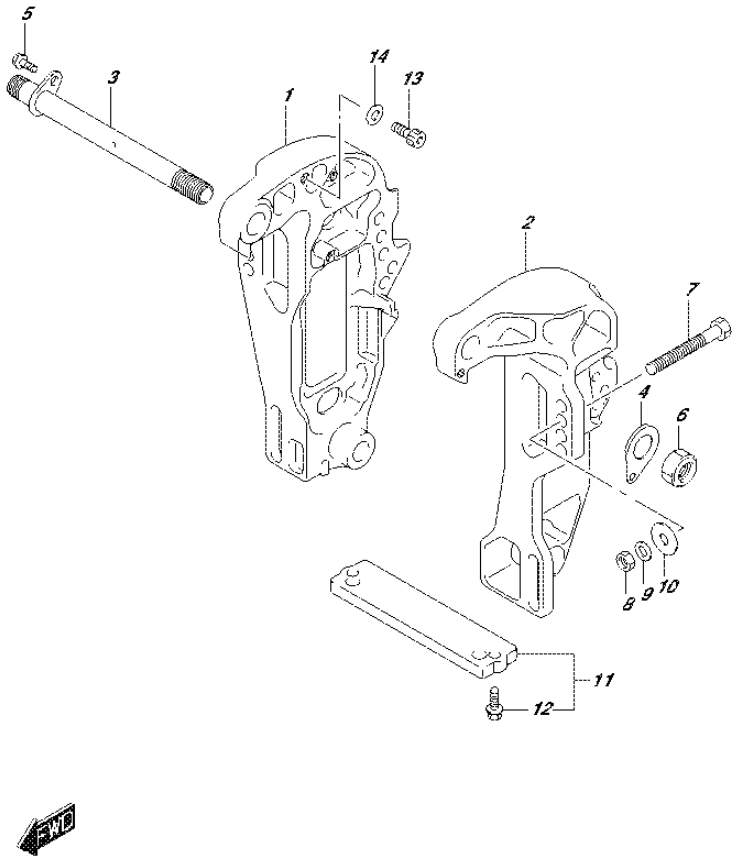

FIG.335G (2-K-9) CLAMP BRACKET (DF60A E01)

REF NO.	PART NO.	DESCRIPTION	Q'TY	REMARKS
1-1	41111-88L10-0EP	BRACKET, CLAMP STBD (BLACK)	1	
1-2	41111-88L10-Y5S	BRACKET, CLAMP STBD (WHITE)	1	
2-1	41121-88L01-0EP	BRACKET, CLAMP PORT (BLACK)	1	
2-2	41121-88L01-Y5S	BRACKET, CLAMP PORT (WHITE)	1	
3	41130-88L10	SHAFT, CLAMP BRACKET	1	
4	41135-93J00	WASHER, CLAMP BRACKET SHAFT	1	
5	09116-08137	BOLT (8X22)	1	
6	09159-22006	NUT	1	
7-1	09100-12093	BOLT (12X100)	4	
7-2	09100-12091	BOLT (12X115)	1	OPT
8	09159-12014	NUT	4	
9	09160-12126	WASHER	4	
10	09160-12044	WASHER (12.5X35X3.2)	4	
11	55320-94900	ZINC, PROTECTION	1	
12	09116-06121	.BOLT (6X25)	2	
13	09106-10065	BOLT (10X20)	2	
14	09160-10082	WASHER (10.5X19X2)	2	

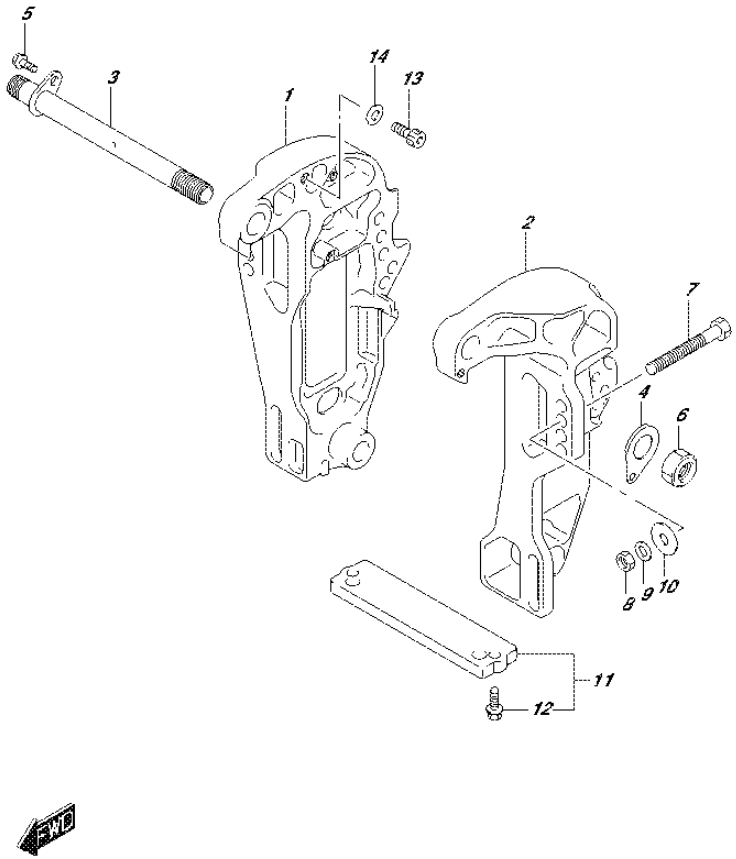

FIG.335H (2-K-10) CLAMP BRACKET (DF60A E40)

REF NO.	PART NO.	DESCRIPTION	Q'TY	REMARKS
1-1	41111-88L10-0EP	BRACKET, CLAMP STBD (BLACK)	1	
1-2	41111-88L10-Y5S	BRACKET, CLAMP STBD (WHITE)	1	
2-1	41121-88L01-0EP	BRACKET, CLAMP PORT (BLACK)	1	
2-2	41121-88L01-Y5S	BRACKET, CLAMP PORT (WHITE)	1	
3	41130-88L10	SHAFT, CLAMP BRACKET	1	
4	41135-93J00	WASHER, CLAMP BRACKET SHAFT	1	
5	09116-08137	BOLT (8X22)	1	
6	09159-22006	NUT	1	
7-1	09100-12093	BOLT (12X100)	4	
7-2	09100-12091	BOLT (12X115)	1	OPT
8	09159-12014	NUT	4	
9	09160-12126	WASHER	4	
10	09160-12044	WASHER (12.5X35X3.2)	4	
11	55320-94900	ZINC, PROTECTION	1	
12	09116-06121	.BOLT (6X25)	2	
13	09106-10065	BOLT (10X20)	2	
14	09160-10082	WASHER (10.5X19X2)	2	

FIG.335J

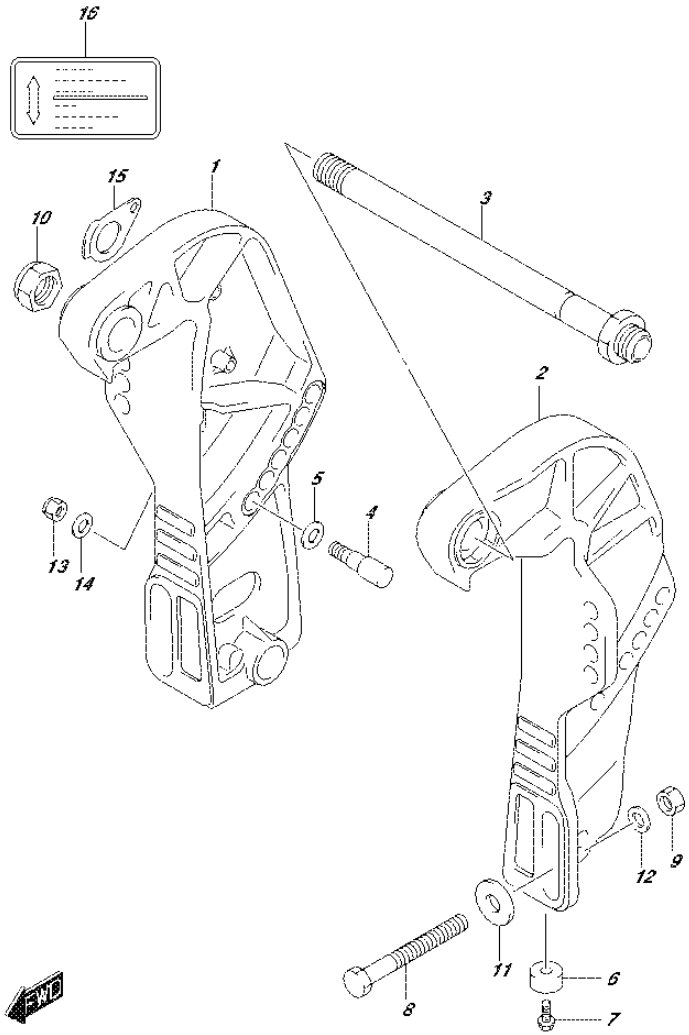

FIG.335J (2-K-11) CLAMP BRACKET (DF60AQH E01)

REF NO.	PART NO.	DESCRIPTION	Q'TY	REMARKS
1	41111-88L20-0EP	BRACKET, CLAMP STBD (BLACK)	1	
2	41121-88L10-0EP	BRACKET, CLAMP PORT (BLACK)	1	
3	41130-87J11	SHAFT, CLAMP BRACKET	1	
4	45421-89J00	PIN, TILT LOCK	2	
5	09160-12066	WASHER (12.5X22X2.5)	2	
6	55321-87J00	ANODE, PROTECTION	2	
7	09103-06281	BOLT (6X14)	2	
8-1	09100-12093	BOLT (12X100)	4	
8-2	09100-12091	BOLT (12X115)	1	OPT
9	09159-12014	NUT	4	
10	09159-22006	NUT	1	
11	09160-12044	WASHER (12.5X35X3.2)	4	
12	09160-12126	WASHER	4	
13	09159-10050	NUT	2	
14	09160-10082	WASHER (10.5X19X2)	2	
15	41135-93J00	WASHER, CLAMP BRACKET SHAFT	1	
16	43241-87J00	MARK, RELEASE LEVER	1	

FIG.335K

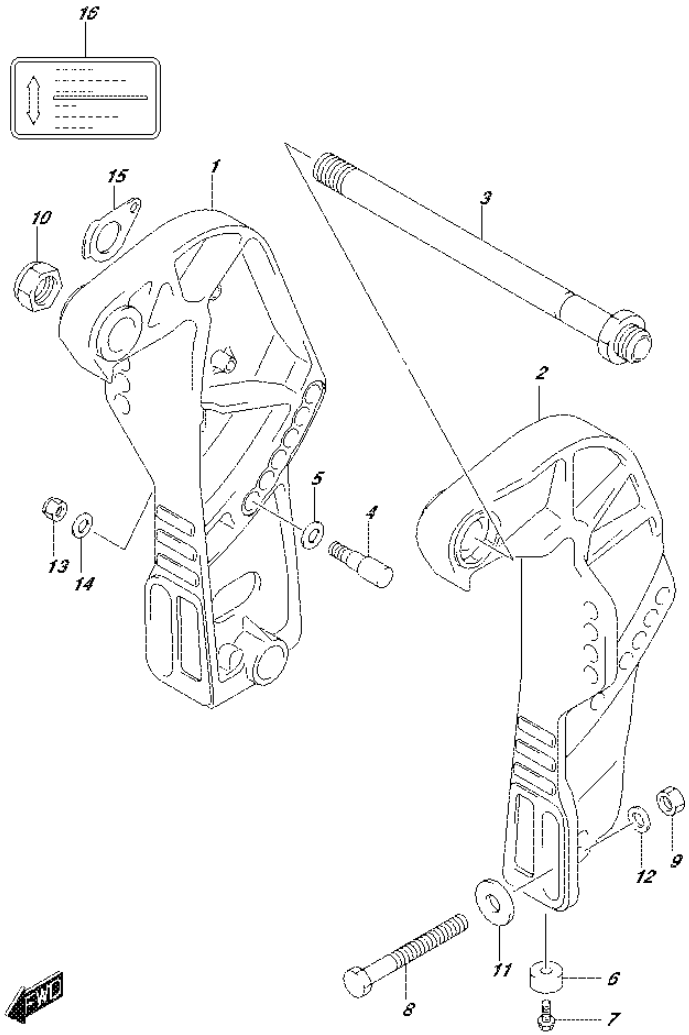

FIG.335K (2-K-12) CLAMP BRACKET (DF60AQH E40)

REF NO.	PART NO.	DESCRIPTION	Q'TY	REMARKS
1	41111-88L20-0EP	BRACKET, CLAMP STBD (BLACK)	1	
2	41121-88L10-0EP	BRACKET, CLAMP PORT (BLACK)	1	
3	41130-87J11	SHAFT, CLAMP BRACKET	1	
4	45421-89J00	PIN, TILT LOCK	2	
5	09160-12066	WASHER (12.5X22X2.5)	2	
6	55321-87J00	ANODE, PROTECTION	2	
7	09103-06281	BOLT (6X14)	2	
8-1	09100-12093	BOLT (12X100)	4	
8-2	09100-12091	BOLT (12X115)	1	OPT
9	09159-12014	NUT	4	
10	09159-22006	NUT	1	
11	09160-12044	WASHER (12.5X35X3.2)	4	
12	09160-12126	WASHER	4	
13	09159-10050	NUT	2	
14	09160-10082	WASHER (10.5X19X2)	2	
15	41135-93J00	WASHER, CLAMP BRACKET SHAFT	1	
16	43241-87J00	MARK, RELEASE LEVER	1	

FIG.335L

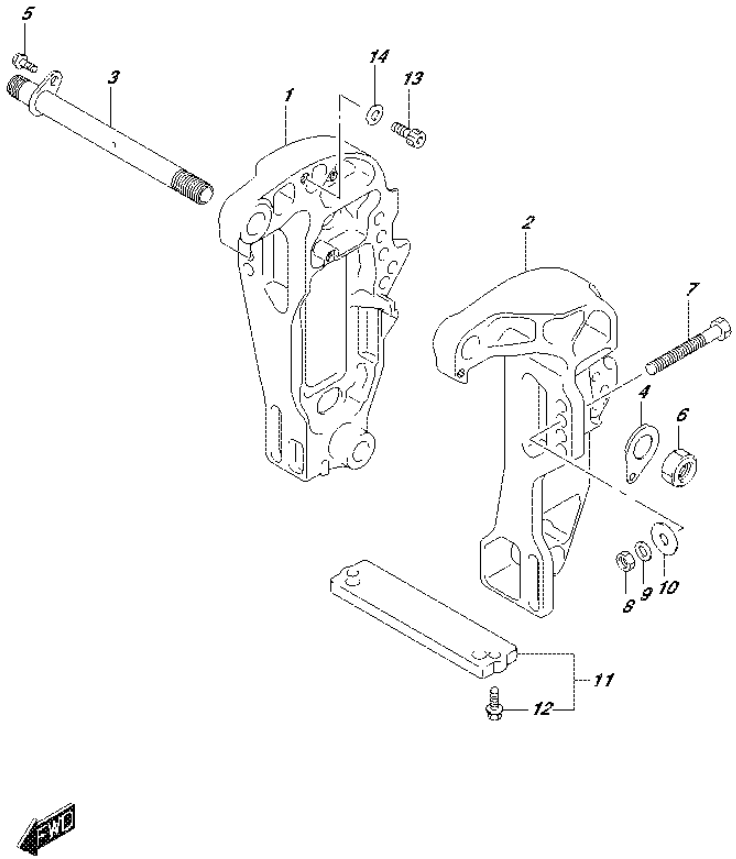

FIG.335L (2-K-13) CLAMP BRACKET (DF60ATH E01)

REF NO.	PART NO.	DESCRIPTION	Q'TY	REMARKS
1	41111-88L10-0EP	BRACKET, CLAMP STBD (BLACK)	1	
2	41121-88L01-0EP	BRACKET, CLAMP PORT (BLACK)	1	
3	41130-88L10	SHAFT, CLAMP BRACKET	1	
4	41135-93J00	WASHER, CLAMP BRACKET SHAFT	1	
5	09116-08137	BOLT (8X22)	1	
6	09159-22006	NUT	1	
7-1	09100-12093	BOLT (12X100)	4	
7-2	09100-12091	BOLT (12X115)	1	OPT
8	09159-12014	NUT	4	
9	09160-12126	WASHER	4	
10	09160-12044	WASHER (12.5X35X3.2)	4	
11	55320-94900	ZINC, PROTECTION	1	
12	09116-06121	.BOLT (6X25)	2	
13	09106-10065	BOLT (10X20)	2	
14	09160-10082	WASHER (10.5X19X2)	2	

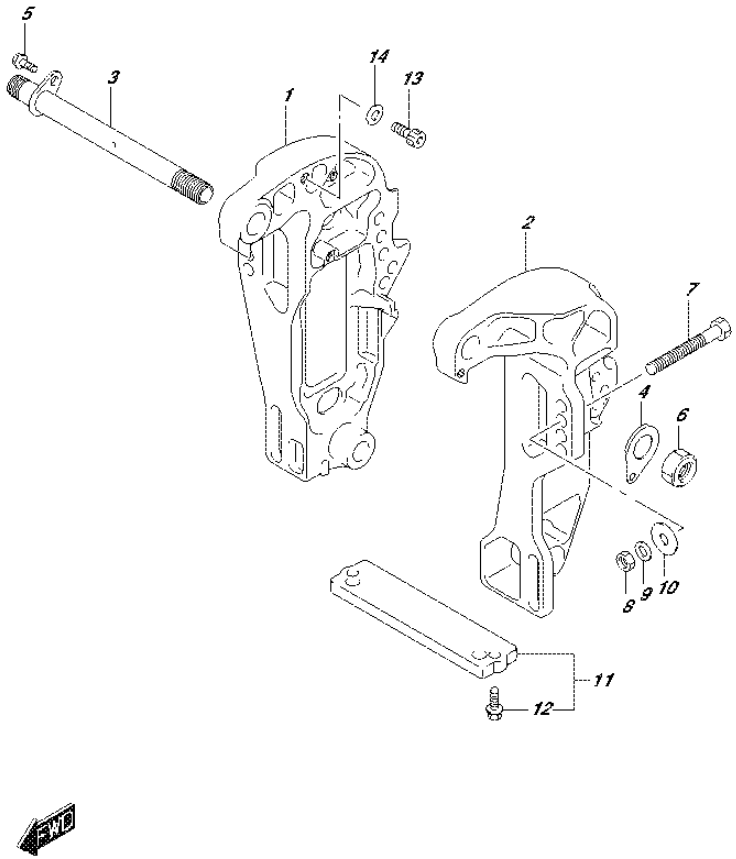

FIG.335M (2-K-14) CLAMP BRACKET (DF60ATH E40)

REF NO.	PART NO.	DESCRIPTION	Q'TY	REMARKS
1	41111-88L10-0EP	BRACKET, CLAMP STBD (BLACK)	1	
2	41121-88L01-0EP	BRACKET, CLAMP PORT (BLACK)	1	
3	41130-88L10	SHAFT, CLAMP BRACKET	1	
4	41135-93J00	WASHER, CLAMP BRACKET SHAFT	1	
5	09116-08137	BOLT (8X22)	1	
6	09159-22006	NUT	1	
7-1	09100-12093	BOLT (12X100)	4	
7-2	09100-12091	BOLT (12X115)	1	OPT
8	09159-12014	NUT	4	
9	09160-12126	WASHER	4	
10	09160-12044	WASHER (12.5X35X3.2)	4	
11	55320-94900	ZINC, PROTECTION	1	
12	09116-06121	.BOLT (6X25)	2	
13	09106-10065	BOLT (10X20)	2	
14	09160-10082	WASHER (10.5X19X2)	2	

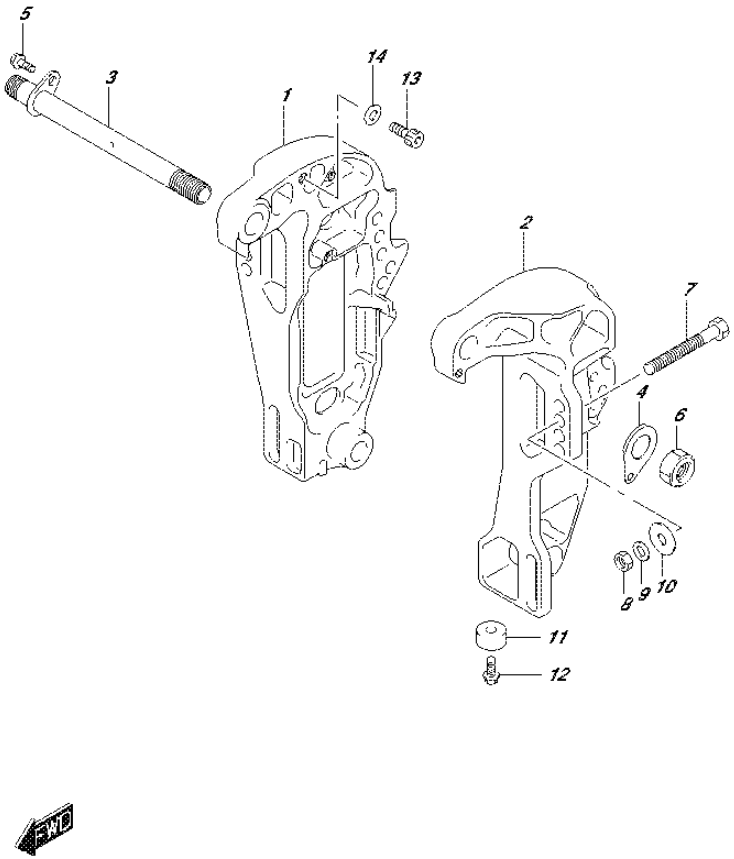

FIG.335N (2-K-15) CLAMP BRACKET (DF50AVT E01)

REF NO.	PART NO.	DESCRIPTION	Q'TY	REMARKS
1	41111-88L10-0EP	BRACKET, CLAMP STBD (BLACK)	1	
2	41121-88L01-0EP	BRACKET, CLAMP PORT (BLACK)	1	
3	41130-88L10	SHAFT, CLAMP BRACKET	1	
4	41135-93J00	WASHER, CLAMP BRACKET SHAFT	1	
5	09116-08137	BOLT (8X22)	1	
6	09159-22006	NUT	1	
7-1	09100-12093	BOLT (12X100)	4	
7-2	09100-12091	BOLT (12X115)	1	OPT
8	09159-12014	NUT	4	
9	09160-12126	WASHER	4	
10	09160-12044	WASHER (12.5X35X3.2)	4	
11	55321-87J00	ANODE, PROTECTION	2	
12	09103-06281	BOLT (6X14)	2	
13	09106-10065	BOLT (10X20)	2	
14	09160-10082	WASHER (10.5X19X2)	2	

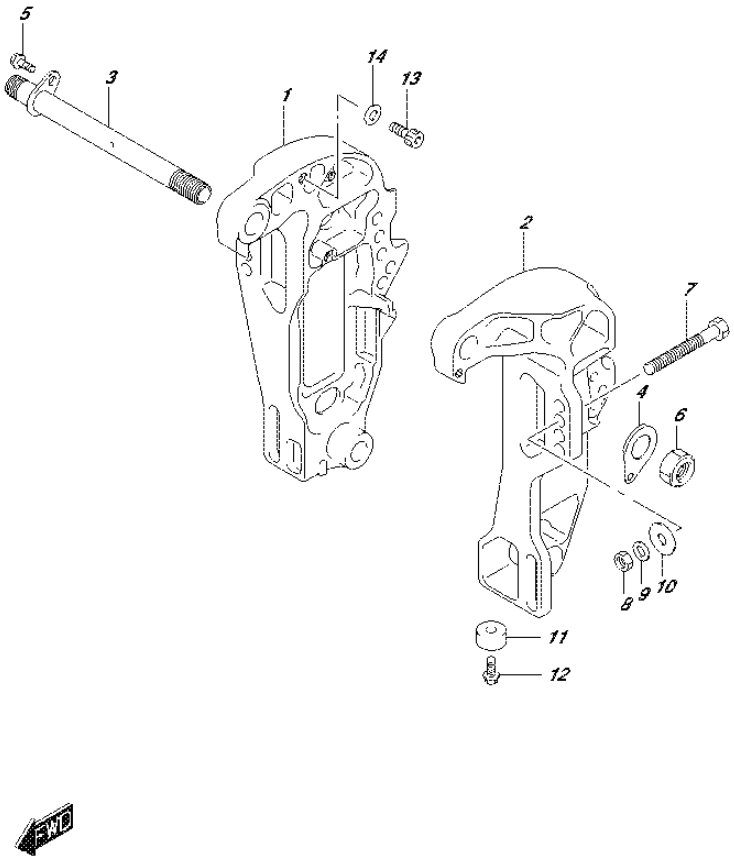

FIG.335P (2-L-2) CLAMP BRACKET (DF50AVTH E01)

REF NO.	PART NO.	DESCRIPTION	Q'TY	REMARKS
1	41111-88L10-0EP	BRACKET, CLAMP STBD (BLACK)	1	
2	41121-88L01-0EP	BRACKET, CLAMP PORT (BLACK)	1	
3	41130-88L10	SHAFT, CLAMP BRACKET	1	
4	41135-93J00	WASHER, CLAMP BRACKET SHAFT	1	
5	09116-08137	BOLT (8X22)	1	
6	09159-22006	NUT	1	
7-1	09100-12093	BOLT (12X100)	4	
7-2	09100-12091	BOLT (12X115)	1	OPT
8	09159-12014	NUT	4	
9	09160-12126	WASHER	4	
10	09160-12044	WASHER (12.5X35X3.2)	4	
11	55321-87J00	ANODE, PROTECTION	2	
12	09103-06281	BOLT (6X14)	2	
13	09106-10065	BOLT (10X20)	2	
14	09160-10082	WASHER (10.5X19X2)	2	

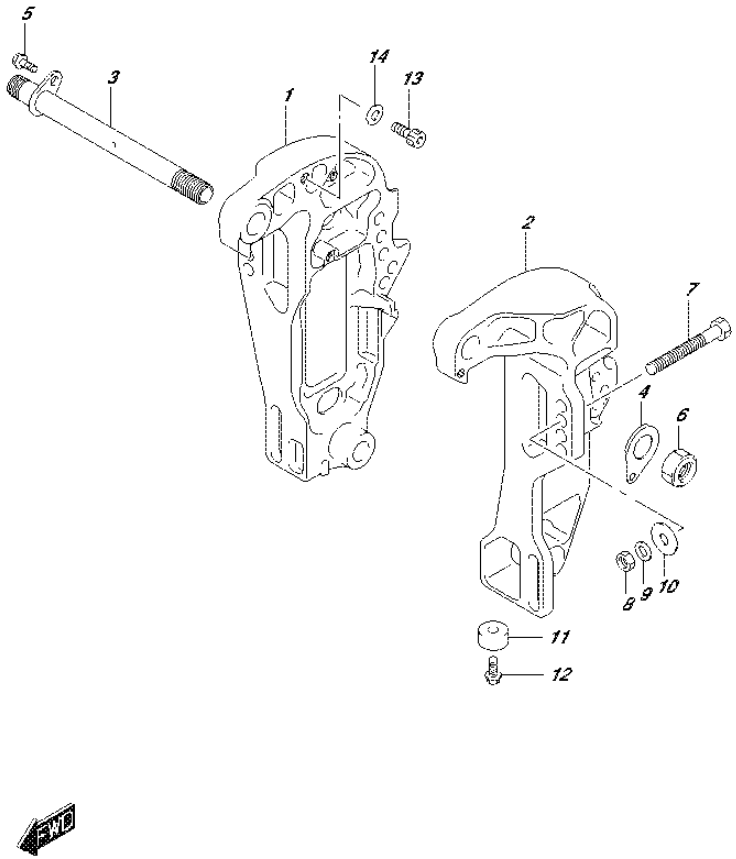

FIG.335R (2-L-3) CLAMP BRACKET (DF60AVT E01)

REF NO.	PART NO.	DESCRIPTION	Q'TY	REMARKS
1	41111-88L10-0EP	BRACKET, CLAMP STBD (BLACK)	1	
2	41121-88L01-0EP	BRACKET, CLAMP PORT (BLACK)	1	
3	41130-88L10	SHAFT, CLAMP BRACKET	1	
4	41135-93J00	WASHER, CLAMP BRACKET SHAFT	1	
5	09116-08137	BOLT (8X22)	1	
6	09159-22006	NUT	1	
7-1	09100-12093	BOLT (12X100)	4	
7-2	09100-12091	BOLT (12X115)	1	OPT
8	09159-12014	NUT	4	
9	09160-12126	WASHER	4	
10	09160-12044	WASHER (12.5X35X3.2)	4	
11	55321-87J00	ANODE, PROTECTION	2	
12	09103-06281	BOLT (6X14)	2	
13	09106-10065	BOLT (10X20)	2	
14	09160-10082	WASHER (10.5X19X2)	2	

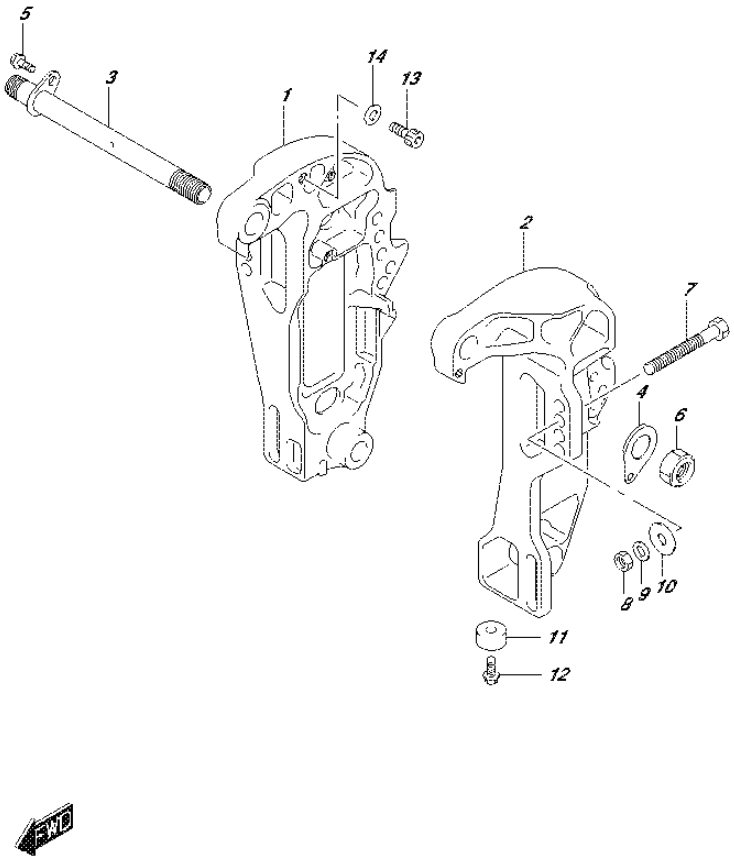

FIG.335S (2-L-4) CLAMP BRACKET (DF60AVT E40)

REF NO.	PART NO.	DESCRIPTION	Q'TY	REMARKS
1	41111-88L10-0EP	BRACKET, CLAMP STBD (BLACK)	1	
2	41121-88L01-0EP	BRACKET, CLAMP PORT (BLACK)	1	
3	41130-88L10	SHAFT, CLAMP BRACKET	1	
4	41135-93J00	WASHER, CLAMP BRACKET SHAFT	1	
5	09116-08137	BOLT (8X22)	1	
6	09159-22006	NUT	1	
7-1	09100-12093	BOLT (12X100)	4	
7-2	09100-12091	BOLT (12X115)	1	OPT
8	09159-12014	NUT	4	
9	09160-12126	WASHER	4	
10	09160-12044	WASHER (12.5X35X3.2)	4	
11	55321-87J00	ANODE, PROTECTION	2	
12	09103-06281	BOLT (6X14)	2	
13	09106-10065	BOLT (10X20)	2	
14	09160-10082	WASHER (10.5X19X2)	2	

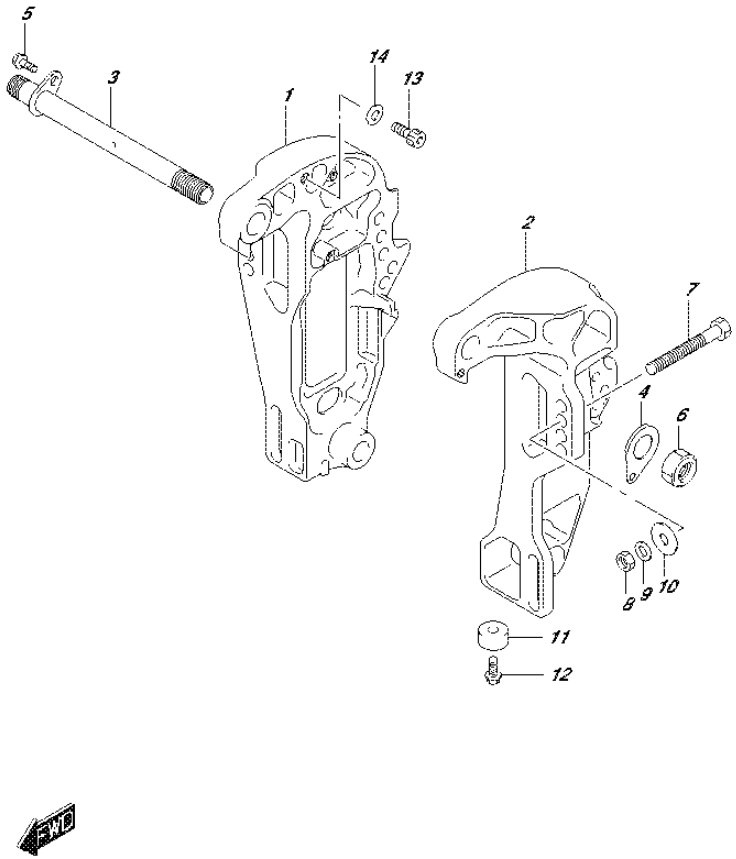

FIG.335T (2-L-5) CLAMP BRACKET (DF60AVTH E01)

REF NO.	PART NO.	DESCRIPTION	Q'TY	REMARKS
1	41111-88L10-0EP	BRACKET, CLAMP STBD (BLACK)	1	
2	41121-88L01-0EP	BRACKET, CLAMP PORT (BLACK)	1	
3	41130-88L10	SHAFT, CLAMP BRACKET	1	
4	41135-93J00	WASHER, CLAMP BRACKET SHAFT	1	
5	09116-08137	BOLT (8X22)	1	
6	09159-22006	NUT	1	
7-1	09100-12093	BOLT (12X100)	4	
7-2	09100-12091	BOLT (12X115)	1	OPT
8	09159-12014	NUT	4	
9	09160-12126	WASHER	4	
10	09160-12044	WASHER (12.5X35X3.2)	4	
11	55321-87J00	ANODE, PROTECTION	2	
12	09103-06281	BOLT (6X14)	2	
13	09106-10065	BOLT (10X20)	2	
14	09160-10082	WASHER (10.5X19X2)	2	

FIG.335U

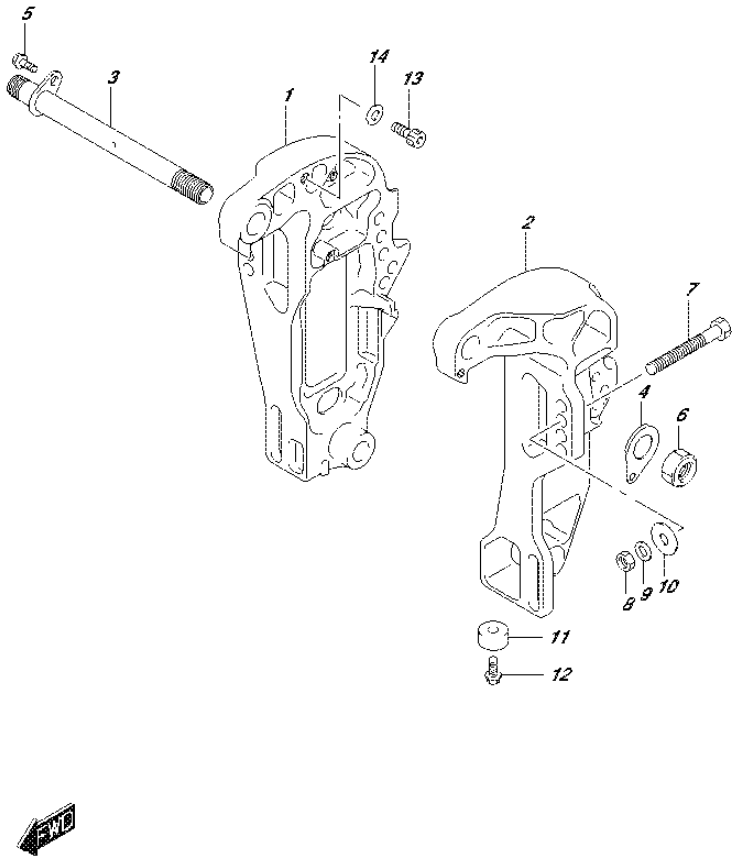

FIG.335U (2-L-6) CLAMP BRACKET (DF60AVTH E40)

REF NO.	PART NO.	DESCRIPTION	Q'TY	REMARKS
1	41111-88L10-0EP	BRACKET, CLAMP STBD (BLACK)	1	
2	41121-88L01-0EP	BRACKET, CLAMP PORT (BLACK)	1	
3	41130-88L10	SHAFT, CLAMP BRACKET	1	
4	41135-93J00	WASHER, CLAMP BRACKET SHAFT	1	
5	09116-08137	BOLT (8X22)	1	
6	09159-22006	NUT	1	
7-1	09100-12093	BOLT (12X100)	4	
7-2	09100-12091	BOLT (12X115)	1	OPT
8	09159-12014	NUT	4	
9	09160-12126	WASHER	4	
10	09160-12044	WASHER (12.5X35X3.2)	4	
11	55321-87J00	ANODE, PROTECTION	2	
12	09103-06281	BOLT (6X14)	2	
13	09106-10065	BOLT (10X20)	2	
14	09160-10082	WASHER (10.5X19X2)	2	

FIG.336A

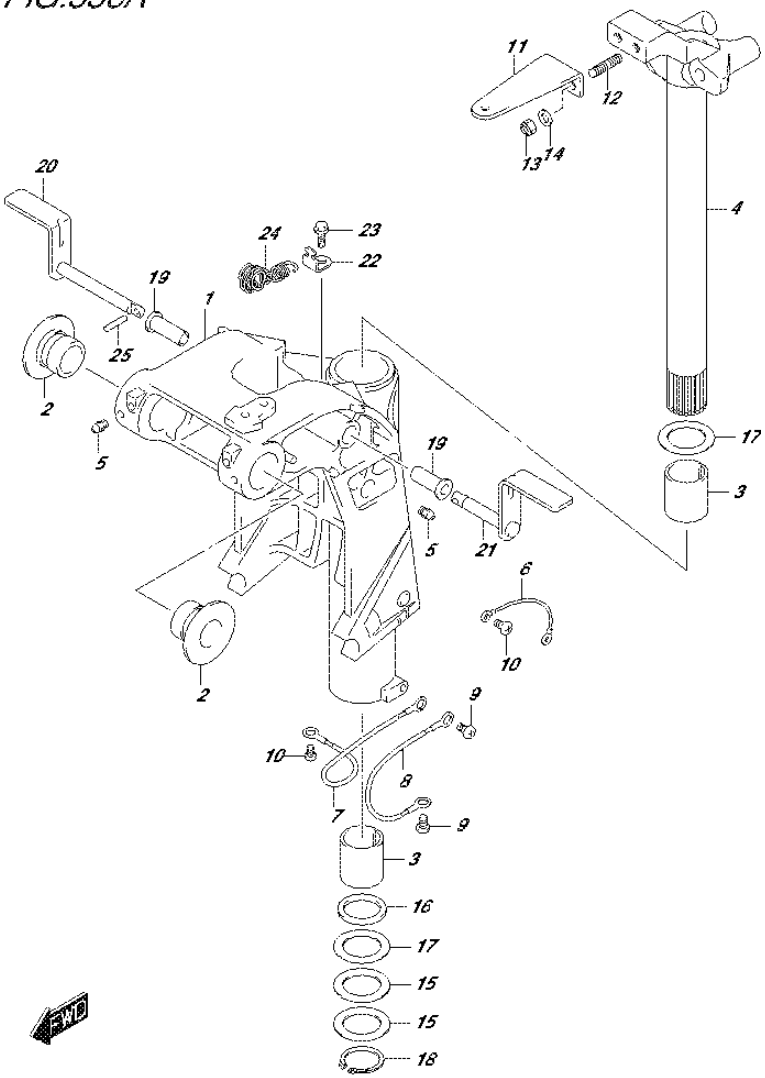

FIG.336A (2-L-7) SWIVEL BRACKET (DF40A E01)

REF NO.	PART NO.	DESCRIPTION	Q'TY	REMARKS
1-1	43111-88L31-0EP	BRACKET, SWIVEL (S) (BLACK)	1	W/TRANSOM(S)
1-2	43111-88L31-Y5S	BRACKET, SWIVEL (S) (WHITE)	1	W/TRANSOM(S)
1-3	43111-88L21-0EP	BRACKET, SWIVEL (L) (BLACK)	1	W/TRANSOM(L)
1-4	43111-88L21-Y5S	BRACKET, SWIVEL (L) (WHITE)	1	W/TRANSOM(L)
2	43211-87J00	BUSH, SWIVEL BRACKET	2	
3	43711-89J10	BUSH, STEERING	2	
4-1	43750-88L31-0EP	BRACKET, STEERING (S) (BLACK)	1	W/TRANSOM(S)
4-2	43750-88L31-Y5S	BRACKET, STEERING (S) (WHITE)	1	W/TRANSOM(S)
4-3	43750-88L21-0EP	BRACKET, STEERING (L) (BLACK)	1	W/TRANSOM(L)
4-4	43750-88L21-Y5S	BRACKET, STEERING (L) (WHITE)	1	W/TRANSOM(L)
5	22511-99011	NIPPLE, GREASE	3	
6	36894-95201	LEAD (CLAMP TO SWIVEL)	1	
7	36895-87D01	LEAD (SWIVEL TO MOUNT BRKT)	1	
8	36895-87D01	LEAD (SWIVEL TO HOUSING)	1	
9	09125-06063	SCREW (6X10)	2	
10	09125-05050	SCREW (5X8)	3	
11	43755-88L00-0EP	ATTACHMENT, STEERING BRKT (BLACK)	1	
12	09108-10161	STUD BOLT	2	
13	09159-10050	NUT	2	
14	09160-10141	WASHER (10.5X19X2)	2	
15	09160-39003	WASHER (39.5X58X0.3)	2	
16	09282-39001	OIL SEAL (39X51X5)	1	
17	09160-39002	WASHER (39.5X58X1)	2	
18	09380-38003	CIRCLIP	1	
19	41226-97E00	BUSH, TILT LOCK LEVER	2	
20	41270-89J10	LEVER, TILT LOCK STBD	1	
21	41280-89J04	LEVER, TILT LOCK PORT	1	
22	45731-96312	BRACKET, SPRING	1	
23	09116-06236	BOLT (6X16)	1	
24	41230-97E10	SPRING, TILT LOCK	1	
25	09205-03012	SPRING PIN (3X16)	1	

FIG.336B

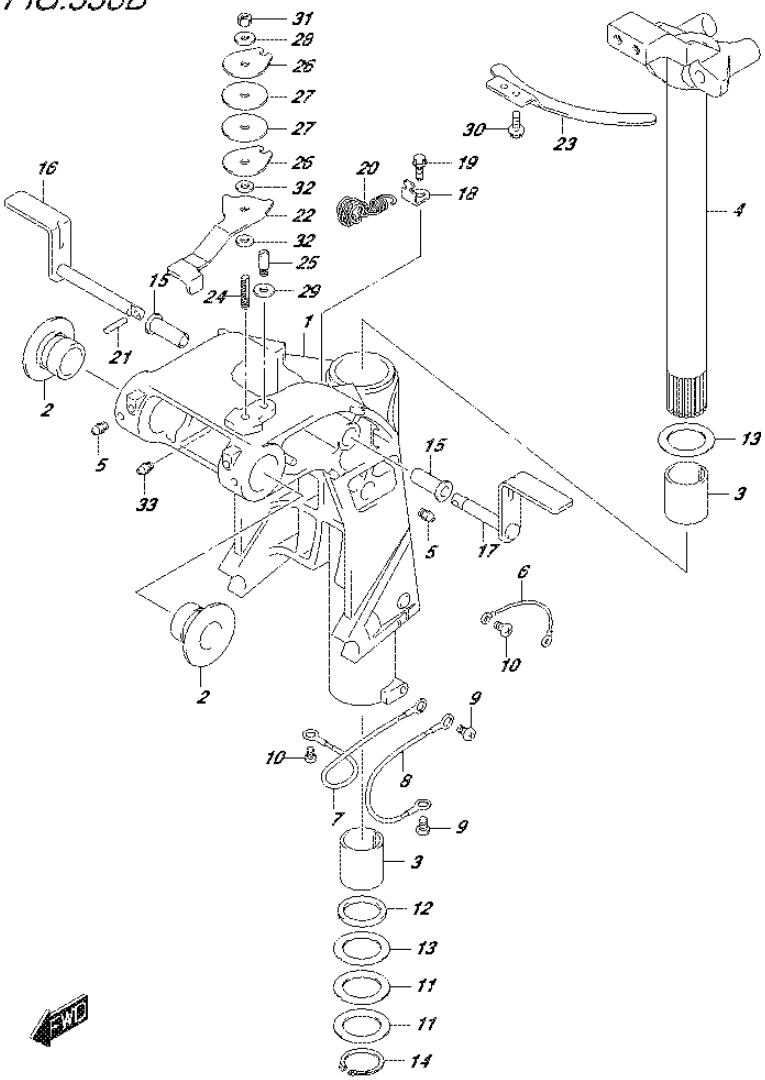

FIG.336B (2-L-8) SWIVEL BRACKET (DF40AQH E01)

REF NO.	PART NO.	DESCRIPTION	Q'TY	REMARKS
1	43111-88L21-0EP	BRACKET, SWIVEL (L) (BLACK)	1	
2	43211-87J00	BUSH, SWIVEL BRACKET	2	
3	43711-89J10	BUSH, STEERING	2	
4	43750-88L21-0EP	BRACKET, STEERING (L) (BLACK)	1	
5	22511-99011	NIPPLE, GREASE	3	
6	36894-95201	LEAD (CLAMP TO SWIVEL)	1	
7	36895-87D01	LEAD (SWIVEL TO MOUNT BRKT)	1	
8	36895-87D01	LEAD (SWIVEL TO HOUSING)	1	
9	09125-06063	SCREW (6X10)	2	
10	09125-05050	SCREW (5X8)	3	
11	09160-39003	WASHER (39.5X58X0.3)	2	
12	09282-39001	OIL SEAL (39X51X5)	1	
13	09160-39002	WASHER (39.5X58X1)	2	
14	09380-38003	CIRCLIP	1	
15	41226-97E00	BUSH, TILT LOCK LEVER	2	
16	41270-89J10	LEVER, TILT LOCK STBD	1	
17	41280-89J04	LEVER, TILT LOCK PORT	1	
18	45731-96312	BRACKET, SPRING	1	
19	09116-06236	BOLT (6X16)	1	
20	41230-97E10	SPRING, TILT LOCK	1	
21	09205-03012	SPRING PIN (3X16)	1	
22	43411-88L00	ADJUSTER, STEERING	1	
23	43415-88L00	PLATE, STEERING ADJUSTER	1	
24	43512-88L00	SHAFT, STRG ADJ THREAD	1	
25	43513-88L00	BOLT, STEERING ADJUSTER	1	
26	43514-88L00	PLATE, STRG ADJ FRICTION	2	
27	43515-88L00	WASHER, STRG ADJ FRICTION PLATE	2	
28	43516-88L00	WASHER, STRG ADJ FRICTION	1	
29	43517-88L00	SPACER, STEERING ADJUSTER	1	
30	09116-06237	BOLT (6X15)	2	
31	09159-08059	NUT	1	
32	09161-08011	WASHER (8.2X18X1.2)	2	
33	22511-99011	NIPPLE, GREASE	1	

FIG.336C

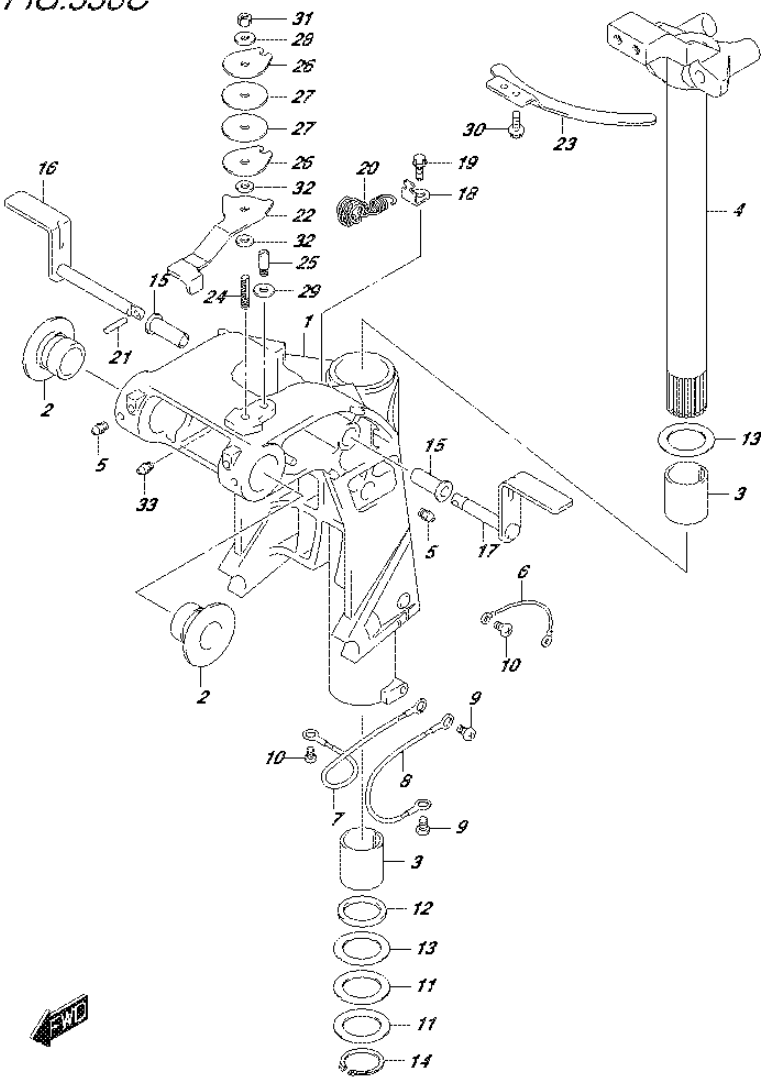

FIG.336C (2-L-9) SWIVEL BRACKET (DF40ATH E01)

REF NO.	PART NO.	DESCRIPTION	Q'TY	REMARKS
1	43111-88L21-0EP	BRACKET, SWIVEL (L) (BLACK)	1	
2	43211-87J00	BUSH, SWIVEL BRACKET	2	
3	43711-89J10	BUSH, STEERING	2	
4	43750-88L21-0EP	BRACKET, STEERING (L) (BLACK)	1	
5	22511-99011	NIPPLE, GREASE	3	
6	36894-95201	LEAD (CLAMP TO SWIVEL)	1	
7	36895-87D01	LEAD (SWIVEL TO MOUNT BRKT)	1	
8	36895-87D01	LEAD (SWIVEL TO HOUSING)	1	
9	09125-06063	SCREW (6X10)	2	
10	09125-05050	SCREW (5X8)	3	
11	09160-39003	WASHER (39.5X58X0.3)	2	
12	09282-39001	OIL SEAL (39X51X5)	1	
13	09160-39002	WASHER (39.5X58X1)	2	
14	09380-38003	CIRCLIP	1	
15	41226-97E00	BUSH, TILT LOCK LEVER	2	
16	41270-89J10	LEVER, TILT LOCK STBD	1	
17	41280-89J04	LEVER, TILT LOCK PORT	1	
18	45731-96312	BRACKET, SPRING	1	
19	09116-06236	BOLT (6X16)	1	
20	41230-97E10	SPRING, TILT LOCK	1	
21	09205-03012	SPRING PIN (3X16)	1	
22	43411-88L00	ADJUSTER, STEERING	1	
23	43415-88L00	PLATE, STEERING ADJUSTER	1	
24	43512-88L00	SHAFT, STRG ADJ THREAD	1	
25	43513-88L00	BOLT, STEERING ADJUSTER	1	
26	43514-88L00	PLATE, STRG ADJ FRICTION	2	
27	43515-88L00	WASHER, STRG ADJ FRICTION PLATE	2	
28	43516-88L00	WASHER, STRG ADJ FRICTION	1	
29	43517-88L00	SPACER, STEERING ADJUSTER	1	
30	09116-06237	BOLT (6X15)	2	
31	09159-08059	NUT	1	
32	09161-08011	WASHER (8.2X18X1.2)	2	
33	22511-99011	NIPPLE, GREASE	1	

FIG.336D

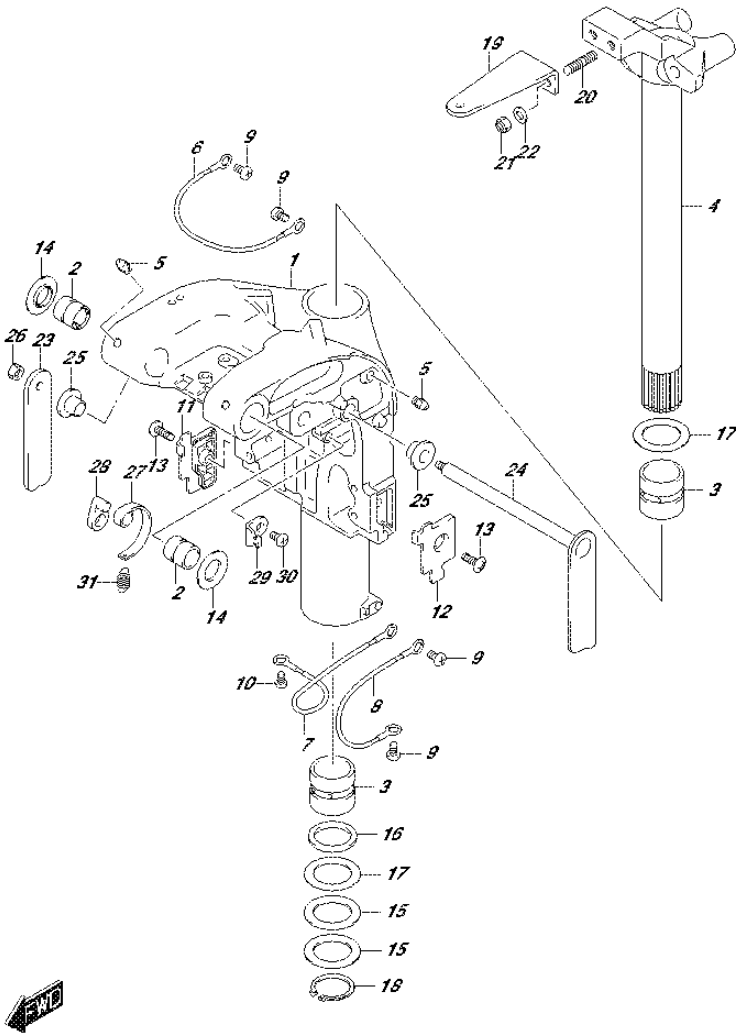

FIG.336D (2-L-10) SWIVEL BRACKET (DF40AST E34)

REF NO.	PART NO.	DESCRIPTION	Q'TY	REMARKS
1-1	43111-88L50-0EP	BRACKET, SWIVEL (S) (BLACK)	1	W/TRANSOM(S)
1-2	43111-88L50-Y5S	BRACKET, SWIVEL (S) (WHITE)	1	W/TRANSOM(S)
1-3	43111-88L40-0EP	BRACKET, SWIVEL (L) (BLACK)	1	W/TRANSOM(L)
1-4	43111-88L40-Y5S	BRACKET, SWIVEL (L) (WHITE)	1	W/TRANSOM(L)
2	43211-88L00	BUSH, SWIVEL BRACKET	2	
3	43711-97E01	BUSH, STEERING	2	
4-1	43750-88L31-0EP	BRACKET, STEERING (S) (BLACK)	1	W/TRANSOM(S)
4-2	43750-88L31-Y5S	BRACKET, STEERING (S) (WHITE)	1	W/TRANSOM(S)
4-3	43750-88L21-0EP	BRACKET, STEERING (L) (BLACK)	1	W/TRANSOM(L)
4-4	43750-88L21-Y5S	BRACKET, STEERING (L) (WHITE)	1	W/TRANSOM(L)
5	22511-99011	NIPPLE, GREASE	4	
6	36894-87D00	LEAD (CLAMP TO SWIVEL)	1	
7	36895-87D01	LEAD (SWIVEL TO MOUNT BRKT)	1	
8	36895-87D01	LEAD (SWIVEL TO HOUSING)	1	
9	09125-06063	SCREW (6X10)	4	
10	09125-05050	SCREW (5X8)	1	
11	43119-88L00	PLATE, SWIVEL BRKT LOWER STBD	1	
12	43119-88L10	PLATE, SWIVEL BRKT LOWER PORT	1	
13	09125-06067	SCREW (6X16)	2	
14	43114-88L00	WASHER, SWIVEL TO CLAMP BRKT	2	
15	09160-39003	WASHER (39.5X58X0.3)	2	
16	09282-39001	OIL SEAL (39X51X5)	1	
17	09160-39002	WASHER (39.5X58X1)	2	
18	09380-38003	CIRCLIP	1	
19	43755-88L00-0EP	ATTACHMENT, STEERING BRKT (BLACK)	1	
20	09108-10161	STUD BOLT	2	
21	09159-10050	NUT	2	
22	09160-10141	WASHER (10.5X19X2)	2	
23	41221-88L00	LEVER, TILT LOCK STBD	1	
24	41280-88L10	LEVER, TILT LOCK PORT	1	
25	41224-88L00	BUSH, TILT LOCK LEVER	2	

FIG.336D

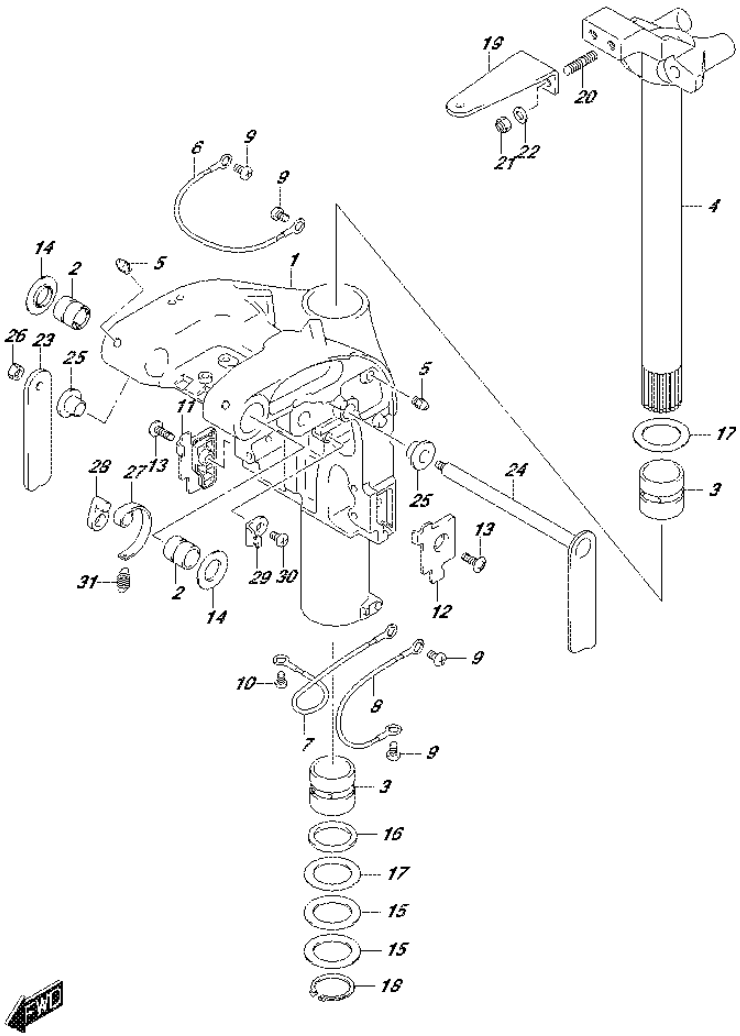

FIG.336D (2-L-11) SWIVEL BRACKET (DF40AST E34)

REF NO.	PART NO.	DESCRIPTION	Q'TY	REMARKS
26	29141-93J00	NUT, TILT LOCK LEVER STBD	1	
27	41231-88L01	LINK, TILT LOCK LEVER	1	
28	41234-88L00	ARM, TILT LOCK LINK	1	
29	45731-96312	BRACKET, SPRING	1	
30	09125-06063	SCREW (6X10)	1	
31	09443-10043	SPRING	1	

FIG.336E

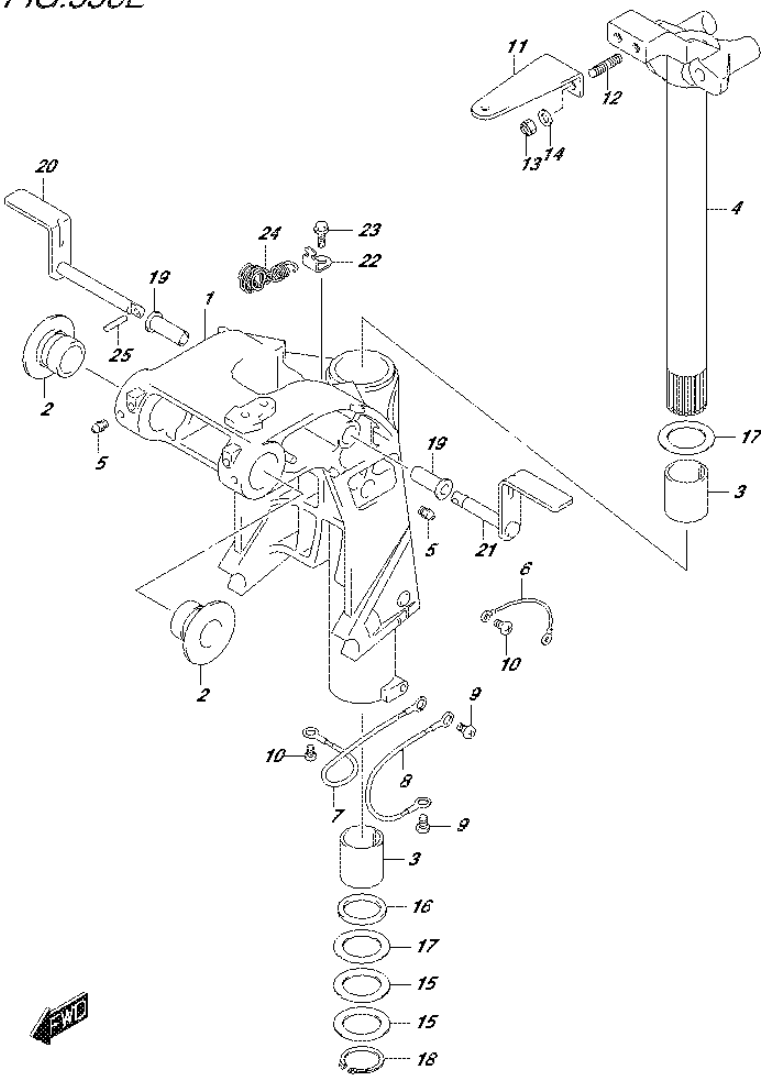

FIG.336E (2-L-12) SWIVEL BRACKET (DF50A E01)

REF NO.	PART NO.	DESCRIPTION	Q'TY	REMARKS
1-1	43111-88L31-0EP	BRACKET, SWIVEL (S) (BLACK)	1	W/TRANSOM(S)
1-2	43111-88L31-Y5S	BRACKET, SWIVEL (S) (WHITE)	1	W/TRANSOM(S)
1-3	43111-88L21-0EP	BRACKET, SWIVEL (L) (BLACK)	1	W/TRANSOM(L)
1-4	43111-88L21-Y5S	BRACKET, SWIVEL (L) (WHITE)	1	W/TRANSOM(L)
2	43211-87J00	BUSH, SWIVEL BRACKET	2	
3	43711-89J10	BUSH, STEERING	2	
4-1	43750-88L31-0EP	BRACKET, STEERING (S) (BLACK)	1	W/TRANSOM(S)
4-2	43750-88L31-Y5S	BRACKET, STEERING (S) (WHITE)	1	W/TRANSOM(S)
4-3	43750-88L21-0EP	BRACKET, STEERING (L) (BLACK)	1	W/TRANSOM(L)
4-4	43750-88L21-Y5S	BRACKET, STEERING (L) (WHITE)	1	W/TRANSOM(L)
5	22511-99011	NIPPLE, GREASE	3	
6	36894-95201	LEAD (CLAMP TO SWIVEL)	1	
7	36895-87D01	LEAD (SWIVEL TO MOUNT BRKT)	1	
8	36895-87D01	LEAD (SWIVEL TO HOUSING)	1	
9	09125-06063	SCREW (6X10)	2	
10	09125-05050	SCREW (5X8)	3	
11	43755-88L00-0EP	ATTACHMENT, STEERING BRKT (BLACK)	1	
12	09108-10161	STUD BOLT	2	
13	09159-10050	NUT	2	
14	09160-10141	WASHER (10.5X19X2)	2	
15	09160-39003	WASHER (39.5X58X0.3)	2	
16	09282-39001	OIL SEAL (39X51X5)	1	
17	09160-39002	WASHER (39.5X58X1)	2	
18	09380-38003	CIRCLIP	1	
19	41226-97E00	BUSH, TILT LOCK LEVER	2	
20	41270-89J10	LEVER, TILT LOCK STBD	1	
21	41280-89J04	LEVER, TILT LOCK PORT	1	
22	45731-96312	BRACKET, SPRING	1	
23	09116-06236	BOLT (6X16)	1	
24	41230-97E10	SPRING, TILT LOCK	1	
25	09205-03012	SPRING PIN (3X16)	1	

FIG.336F

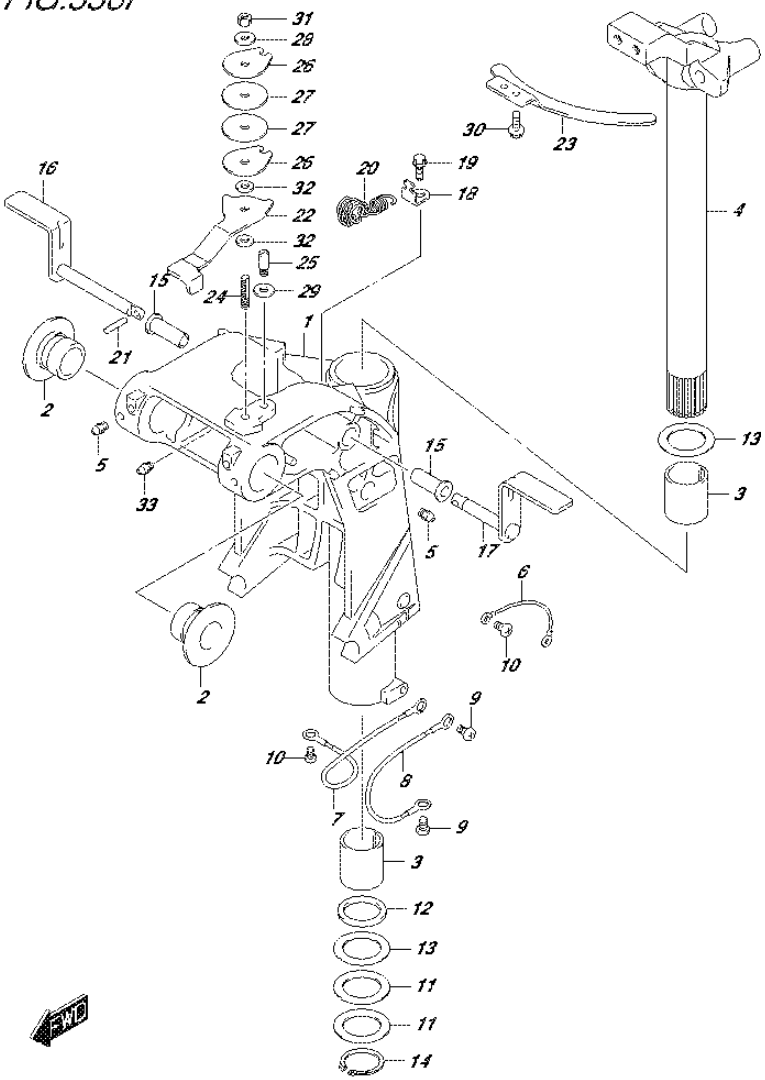

FIG.336F (2-L-13) SWIVEL BRACKET (DF50ATH E01)

REF NO.	PART NO.	DESCRIPTION	Q'TY	REMARKS
1	43111-88L21-0EP	BRACKET, SWIVEL (L) (BLACK)	1	
2	43211-87J00	BUSH, SWIVEL BRACKET	2	
3	43711-89J10	BUSH, STEERING	2	
4	43750-88L21-0EP	BRACKET, STEERING (L) (BLACK)	1	
5	22511-99011	NIPPLE, GREASE	3	
6	36894-95201	LEAD (CLAMP TO SWIVEL)	1	
7	36895-87D01	LEAD (SWIVEL TO MOUNT BRKT)	1	
8	36895-87D01	LEAD (SWIVEL TO HOUSING)	1	
9	09125-06063	SCREW (6X10)	2	
10	09125-05050	SCREW (5X8)	3	
11	09160-39003	WASHER (39.5X58X0.3)	2	
12	09282-39001	OIL SEAL (39X51X5)	1	
13	09160-39002	WASHER (39.5X58X1)	2	
14	09380-38003	CIRCLIP	1	
15	41226-97E00	BUSH, TILT LOCK LEVER	2	
16	41270-89J10	LEVER, TILT LOCK STBD	1	
17	41280-89J04	LEVER, TILT LOCK PORT	1	
18	45731-96312	BRACKET, SPRING	1	
19	09116-06236	BOLT (6X16)	1	
20	41230-97E10	SPRING, TILT LOCK	1	
21	09205-03012	SPRING PIN (3X16)	1	
22	43411-88L00	ADJUSTER, STEERING	1	
23	43415-88L00	PLATE, STEERING ADJUSTER	1	
24	43512-88L00	SHAFT, STRG ADJ THREAD	1	
25	43513-88L00	BOLT, STEERING ADJUSTER	1	
26	43514-88L00	PLATE, STRG ADJ FRICTION	2	
27	43515-88L00	WASHER, STRG ADJ FRICTION PLATE	2	
28	43516-88L00	WASHER, STRG ADJ FRICTION	1	
29	43517-88L00	SPACER, STEERING ADJUSTER	1	
30	09116-06237	BOLT (6X15)	2	
31	09159-08059	NUT	1	
32	09161-08011	WASHER (8.2X18X1.2)	2	
33	22511-99011	NIPPLE, GREASE	1	

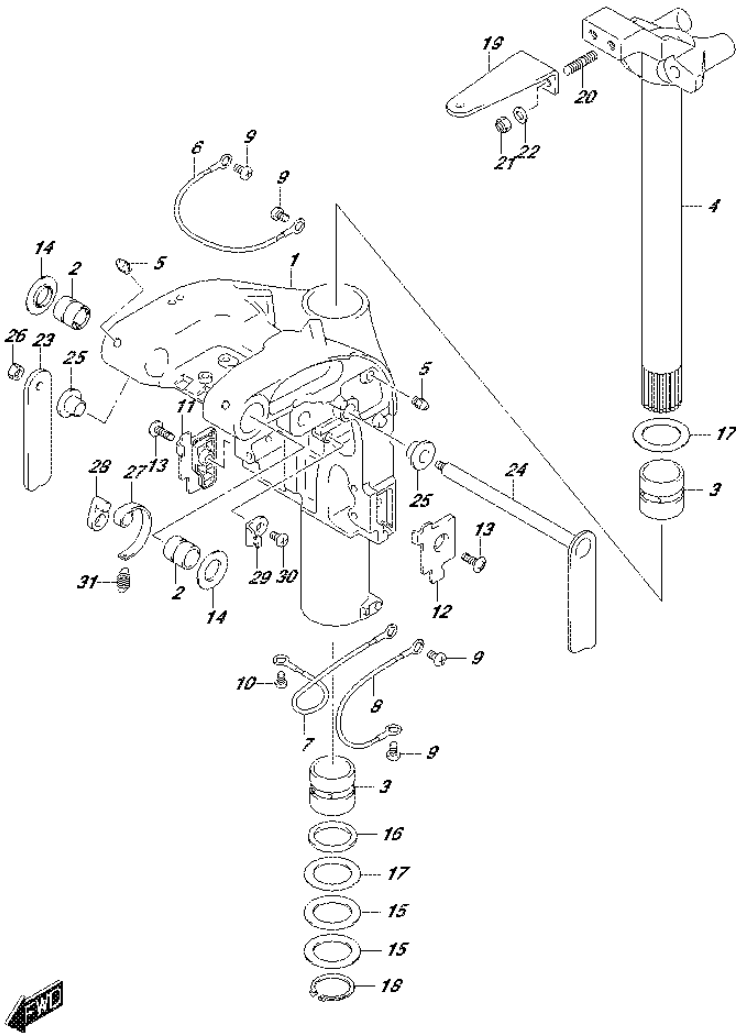

FIG.336G (2-L-14) SWIVEL BRACKET (DF60A E01)

REF NO.	PART NO.	DESCRIPTION	Q'TY	REMARKS
1-1	43111-88L50-0EP	BRACKET, SWIVEL (S) (BLACK)	1	W/TRANSOM(S)
1-2	43111-88L50-Y5S	BRACKET, SWIVEL (S) (WHITE)	1	W/TRANSOM(S)
1-3	43111-88L40-0EP	BRACKET, SWIVEL (L) (BLACK)	1	W/TRANSOM(L) W/TRANSOM(X)
1-4	43111-88L40-Y5S	BRACKET, SWIVEL (L) (WHITE)	1	W/TRANSOM(L) W/TRANSOM(X)
2	43211-88L00	BUSH, SWIVEL BRACKET	2	
3	43711-97E01	BUSH, STEERING	2	
4-1	43750-88L31-0EP	BRACKET, STEERING (S) (BLACK)	1	W/TRANSOM(S)
4-2	43750-88L31-Y5S	BRACKET, STEERING (S) (WHITE)	1	W/TRANSOM(S)
4-3	43750-88L21-0EP	BRACKET, STEERING (L) (BLACK)	1	W/TRANSOM(L) W/TRANSOM(X)
4-4	43750-88L21-Y5S	BRACKET, STEERING (L) (WHITE)	1	W/TRANSOM(L) W/TRANSOM(X)
5	22511-99011	NIPPLE, GREASE	4	
6	36894-87D00	LEAD (CLAMP TO SWIVEL)	1	
7	36895-87D01	LEAD (SWIVEL TO MOUNT BRKT)	1	
8	36895-87D01	LEAD (SWIVEL TO HOUSING)	1	
9	09125-06063	SCREW (6X10)	4	
10	09125-05050	SCREW (5X8)	1	
11	43119-88L00	PLATE, SWIVEL BRKT LOWER STBD	1	
12	43119-88L10	PLATE, SWIVEL BRKT LOWER PORT	1	
13	09125-06067	SCREW (6X16)	2	
14	43114-88L00	WASHER, SWIVEL TO CLAMP BRKT	2	
15	09160-39003	WASHER (39.5X58X0.3)	2	
16	09282-39001	OIL SEAL (39X51X5)	1	
17	09160-39002	WASHER (39.5X58X1)	2	
18	09380-38003	CIRCLIP	1	
19	43755-88L00-0EP	ATTACHMENT, STEERING BRKT (BLACK)	1	
20	09108-10161	STUD BOLT	2	
21	09159-10050	NUT	2	
22	09160-10141	WASHER (10.5X19X2)	2	
23	41221-88L00	LEVER, TILT LOCK STBD	1	
24	41280-88L10	LEVER, TILT LOCK PORT	1	
25	41224-88L00	BUSH, TILT LOCK LEVER	2	

FIG.336G

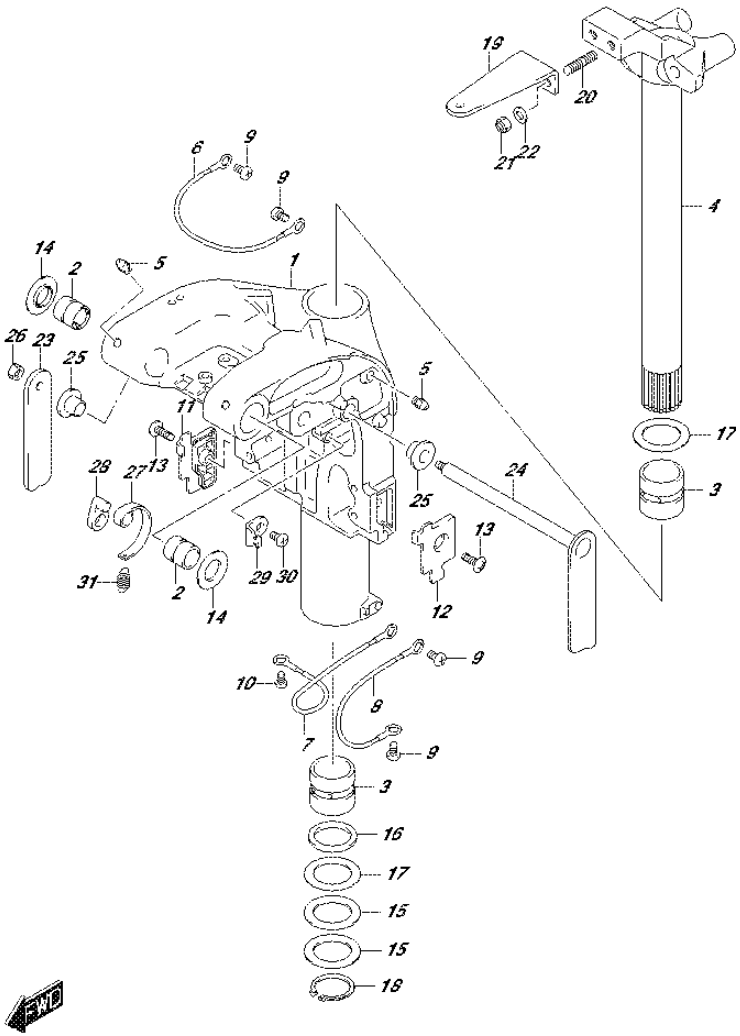

FIG.336G (2-L-15) SWIVEL BRACKET (DF60A E01)

REF NO.	PART NO.	DESCRIPTION	Q'TY	REMARKS
26	29141-93J00	NUT, TILT LOCK LEVER STBD	1	
27	41231-88L01	LINK, TILT LOCK LEVER	1	
28	41234-88L00	ARM, TILT LOCK LINK	1	
29	45731-96312	BRACKET, SPRING	1	
30	09125-06063	SCREW (6X10)	1	
31	09443-10043	SPRING	1	

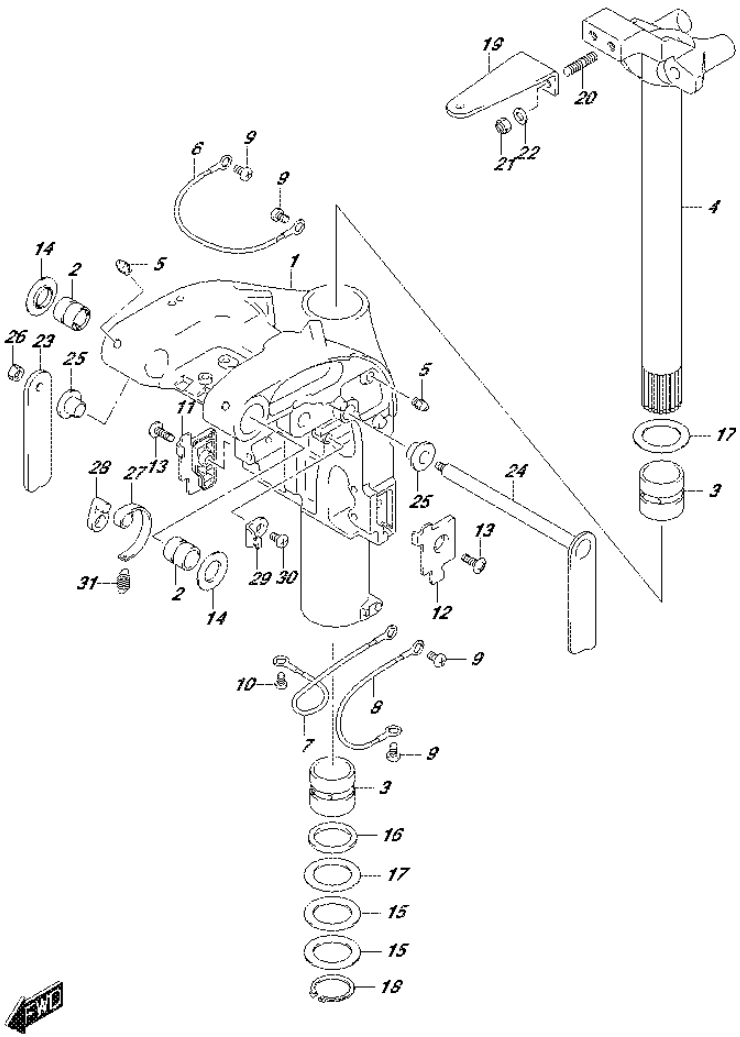

FIG.336H (3-B-2) SWIVEL BRACKET (DF60A E40)

REF NO.	PART NO.	DESCRIPTION	Q'TY	REMARKS
1-1	43111-88L40-0EP	BRACKET, SWIVEL (L) (BLACK)	1	
1-2	43111-88L40-Y5S	BRACKET, SWIVEL (L) (WHITE)	1	
2	43211-88L00	BUSH, SWIVEL BRACKET	2	
3	43711-97E01	BUSH, STEERING	2	
4-1	43750-88L21-0EP	BRACKET, STEERING (L) (BLACK)	1	
4-2	43750-88L21-Y5S	BRACKET, STEERING (L) (WHITE)	1	
5	22511-99011	NIPPLE, GREASE	4	
6	36894-87D00	LEAD (CLAMP TO SWIVEL)	1	
7	36895-87D01	LEAD (SWIVEL TO MOUNT BRKT)	1	
8	36895-87D01	LEAD (SWIVEL TO HOUSING)	1	
9	09125-06063	SCREW (6X10)	4	
10	09125-05050	SCREW (5X8)	1	
11	43119-88L00	PLATE, SWIVEL BRKT LOWER STBD	1	
12	43119-88L10	PLATE, SWIVEL BRKT LOWER PORT	1	
13	09125-06067	SCREW (6X16)	2	
14	43114-88L00	WASHER, SWIVEL TO CLAMP BRKT	2	
15	09160-39003	WASHER (39.5X58X0.3)	2	
16	09282-39001	OIL SEAL (39X51X5)	1	
17	09160-39002	WASHER (39.5X58X1)	2	
18	09380-38003	CIRCLIP	1	
19	43755-88L00-0EP	ATTACHMENT, STEERING BRKT (BLACK)	1	
20	09108-10161	STUD BOLT	2	
21	09159-10050	NUT	2	
22	09160-10141	WASHER (10.5X19X2)	2	
23	41221-88L00	LEVER, TILT LOCK STBD	1	
24	41280-88L10	LEVER, TILT LOCK PORT	1	
25	41224-88L00	BUSH, TILT LOCK LEVER	2	

FIG.336H

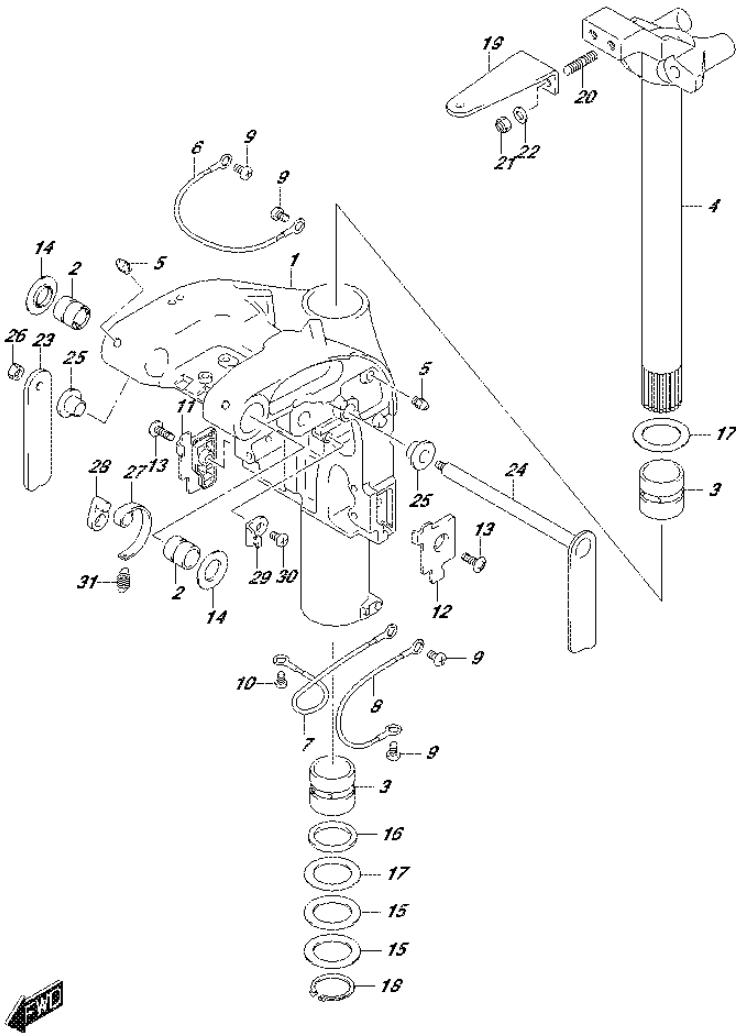

FIG.336H (3-B-3) SWIVEL BRACKET (DF60A E40)

REF NO.	PART NO.	DESCRIPTION	Q'TY	REMARKS
26	29141-93J00	NUT, TILT LOCK LEVER STBD	1	
27	41231-88L01	LINK, TILT LOCK LEVER	1	
28	41234-88L00	ARM, TILT LOCK LINK	1	
29	45731-96312	BRACKET, SPRING	1	
30	09125-06063	SCREW (6X10)	1	
31	09443-10043	SPRING	1	

FIG.336J

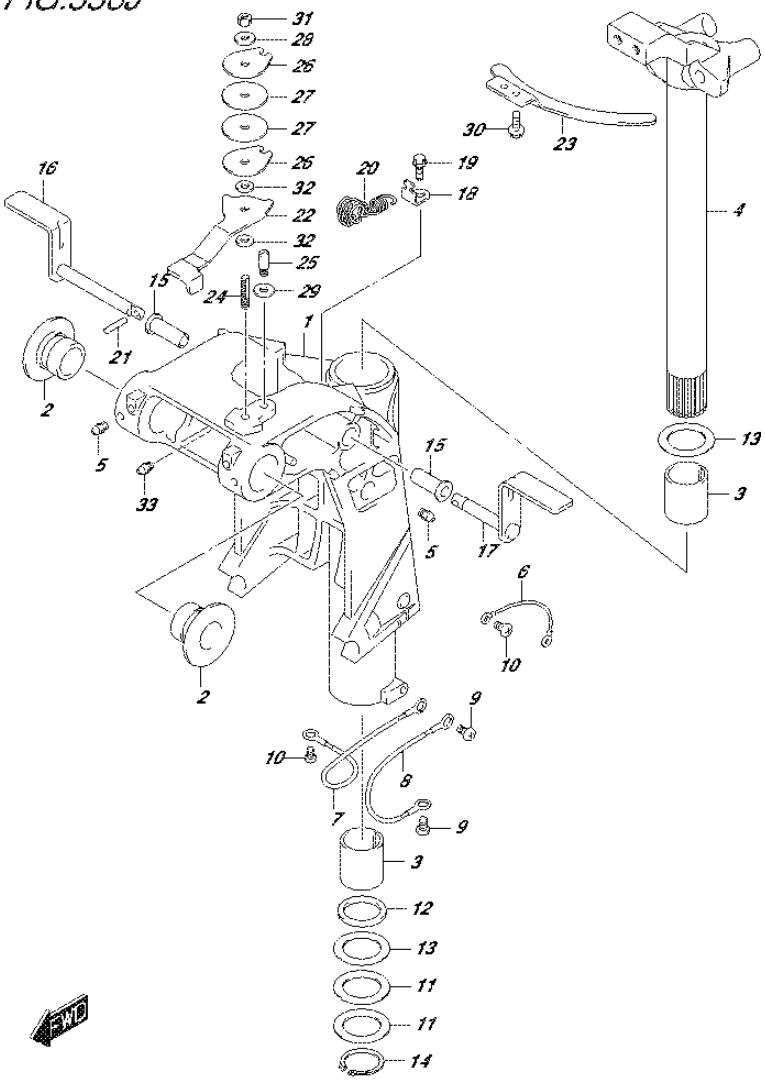

FIG.336J (3-B-4) SWIVEL BRACKET (DF60AQH E01)

REF NO.	PART NO.	DESCRIPTION	Q'TY	REMARKS
1	43111-88L21-0EP	BRACKET, SWIVEL (L) (BLACK)	1	
2	43211-87J00	BUSH, SWIVEL BRACKET	2	
3	43711-89J10	BUSH, STEERING	2	
4	43750-88L21-0EP	BRACKET, STEERING (L) (BLACK)	1	
5	22511-99011	NIPPLE, GREASE	3	
6	36894-95201	LEAD (CLAMP TO SWIVEL)	1	
7	36895-87D01	LEAD (SWIVEL TO MOUNT BRKT)	1	
8	36895-87D01	LEAD (SWIVEL TO HOUSING)	1	
9	09125-06063	SCREW (6X10)	2	
10	09125-05050	SCREW (5X8)	3	
11	09160-39003	WASHER (39.5X58X0.3)	2	
12	09282-39001	OIL SEAL (39X51X5)	1	
13	09160-39002	WASHER (39.5X58X1)	2	
14	09380-38003	CIRCLIP	1	
15	41226-97E00	BUSH, TILT LOCK LEVER	2	
16	41270-89J10	LEVER, TILT LOCK STBD	1	
17	41280-89J04	LEVER, TILT LOCK PORT	1	
18	45731-96312	BRACKET, SPRING	1	
19	09116-06236	BOLT (6X16)	1	
20	41230-97E10	SPRING, TILT LOCK	1	
21	09205-03012	SPRING PIN (3X16)	1	
22	43411-88L00	ADJUSTER, STEERING	1	
23	43415-88L00	PLATE, STEERING ADJUSTER	1	
24	43512-88L00	SHAFT, STRG ADJ THREAD	1	
25	43513-88L00	BOLT, STEERING ADJUSTER	1	
26	43514-88L00	PLATE, STRG ADJ FRICTION	2	
27	43515-88L00	WASHER, STRG ADJ FRICTION PLATE	2	
28	43516-88L00	WASHER, STRG ADJ FRICTION	1	
29	43517-88L00	SPACER, STEERING ADJUSTER	1	
30	09116-06237	BOLT (6X15)	2	
31	09159-08059	NUT	1	
32	09161-08011	WASHER (8.2X18X1.2)	2	
33	22511-99011	NIPPLE, GREASE	1	

FIG.336K

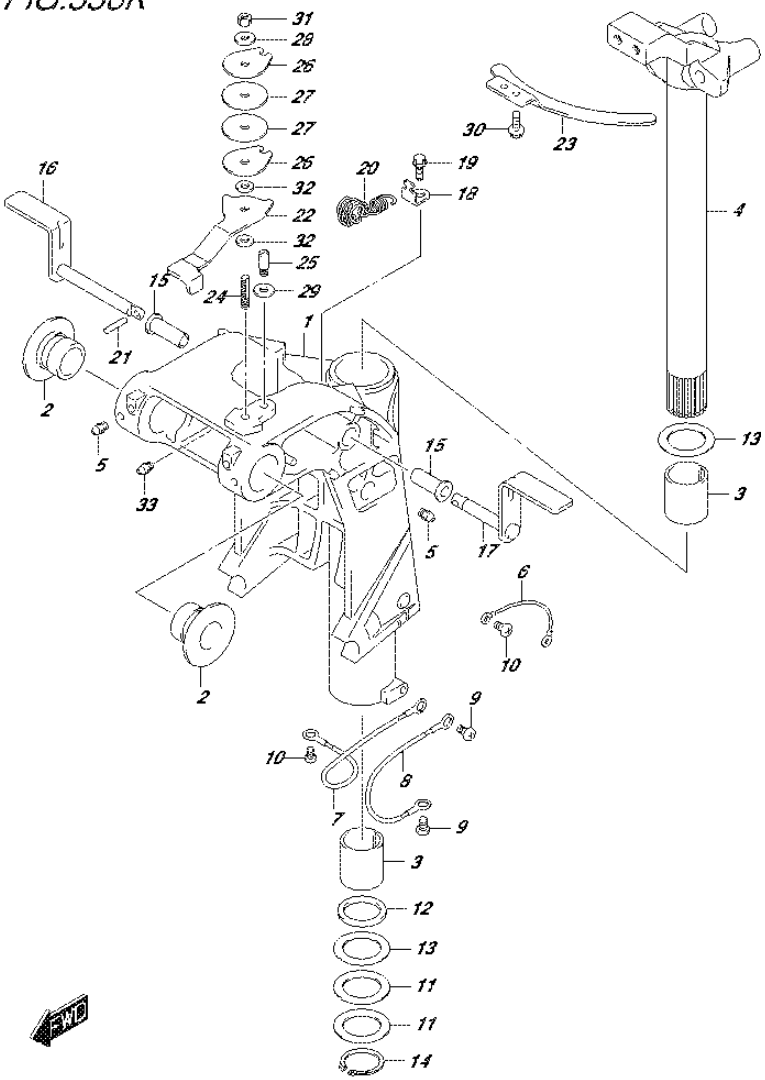

FIG.336K (3-B-5) SWIVEL BRACKET (DF60AQH E40)

REF NO.	PART NO.	DESCRIPTION	Q'TY	REMARKS
1	43111-88L21-0EP	BRACKET, SWIVEL (L) (BLACK)	1	
2	43211-87J00	BUSH, SWIVEL BRACKET	2	
3	43711-89J10	BUSH, STEERING	2	
4	43750-88L21-0EP	BRACKET, STEERING (L) (BLACK)	1	
5	22511-99011	NIPPLE, GREASE	3	
6	36894-95201	LEAD (CLAMP TO SWIVEL)	1	
7	36895-87D01	LEAD (SWIVEL TO MOUNT BRKT)	1	
8	36895-87D01	LEAD (SWIVEL TO HOUSING)	1	
9	09125-06063	SCREW (6X10)	2	
10	09125-05050	SCREW (5X8)	3	
11	09160-39003	WASHER (39.5X58X0.3)	2	
12	09282-39001	OIL SEAL (39X51X5)	1	
13	09160-39002	WASHER (39.5X58X1)	2	
14	09380-38003	CIRCLIP	1	
15	41226-97E00	BUSH, TILT LOCK LEVER	2	
16	41270-89J10	LEVER, TILT LOCK STBD	1	
17	41280-89J04	LEVER, TILT LOCK PORT	1	
18	45731-96312	BRACKET, SPRING	1	
19	09116-06236	BOLT (6X16)	1	
20	41230-97E10	SPRING, TILT LOCK	1	
21	09205-03012	SPRING PIN (3X16)	1	
22	43411-88L00	ADJUSTER, STEERING	1	
23	43415-88L00	PLATE, STEERING ADJUSTER	1	
24	43512-88L00	SHAFT, STRG ADJ THREAD	1	
25	43513-88L00	BOLT, STEERING ADJUSTER	1	
26	43514-88L00	PLATE, STRG ADJ FRICTION	2	
27	43515-88L00	WASHER, STRG ADJ FRICTION PLATE	2	
28	43516-88L00	WASHER, STRG ADJ FRICTION	1	
29	43517-88L00	SPACER, STEERING ADJUSTER	1	
30	09116-06237	BOLT (6X15)	2	
31	09159-08059	NUT	1	
32	09161-08011	WASHER (8.2X18X1.2)	2	
33	22511-99011	NIPPLE, GREASE	1	

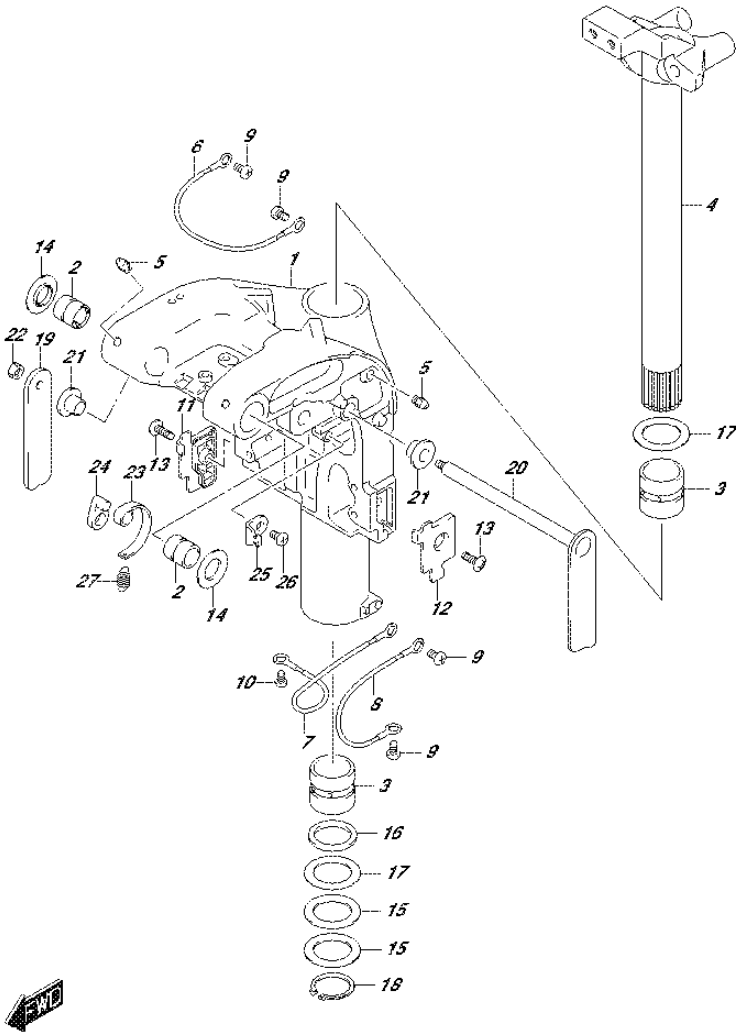

FIG.336L (3-B-6) SWIVEL BRACKET (DF60ATH E01)

REF NO.	PART NO.	DESCRIPTION	Q'TY	REMARKS
1	43111-88L40-0EP	BRACKET, SWIVEL (L) (BLACK)	1	
2	43211-88L00	BUSH, SWIVEL BRACKET	2	
3	43711-97E01	BUSH, STEERING	2	
4	43750-88L21-0EP	BRACKET, STEERING (L) (BLACK)	1	
5	22511-99011	NIPPLE, GREASE	4	
6	36894-87D00	LEAD (CLAMP TO SWIVEL)	1	
7	36895-87D01	LEAD (SWIVEL TO MOUNT BRKT)	1	
8	36895-87D01	LEAD (SWIVEL TO HOUSING)	1	
9	09125-06063	SCREW (6X10)	4	
10	09125-05050	SCREW (5X8)	1	
11	43119-88L00	PLATE, SWIVEL BRKT LOWER STBD	1	
12	43119-88L10	PLATE, SWIVEL BRKT LOWER PORT	1	
13	09125-06067	SCREW (6X16)	2	
14	43114-88L00	WASHER, SWIVEL TO CLAMP BRKT	2	
15	09160-39003	WASHER (39.5X58X0.3)	2	
16	09282-39001	OIL SEAL (39X51X5)	1	
17	09160-39002	WASHER (39.5X58X1)	2	
18	09380-38003	CIRCLIP	1	
19	41221-88L00	LEVER, TILT LOCK STBD	1	
20	41280-88L10	LEVER, TILT LOCK PORT	1	
21	41224-88L00	BUSH, TILT LOCK LEVER	2	
22	29141-93J00	NUT, TILT LOCK LEVER STBD	1	
23	41231-88L01	LINK, TILT LOCK LEVER	1	
24	41234-88L00	ARM, TILT LOCK LINK	1	
25	45731-96312	BRACKET, SPRING	1	
26	09125-06063	SCREW (6X10)	1	
27	09443-10043	SPRING	1	

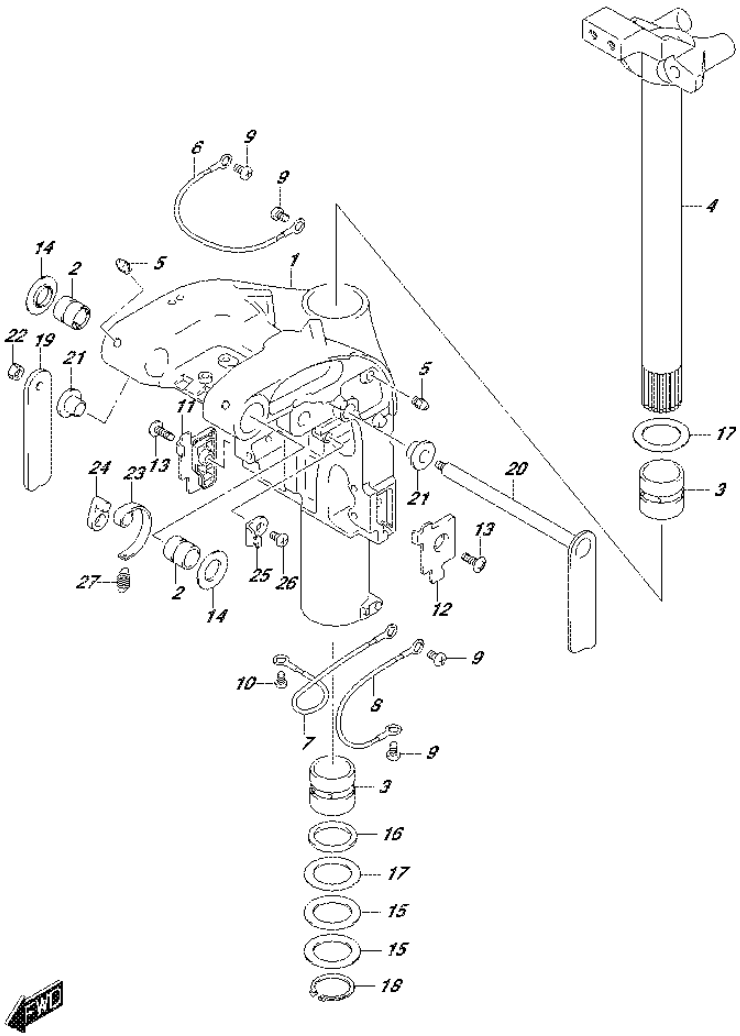

FIG.336M (3-B-7) SWIVEL BRACKET (DF60ATH E40)

REF NO.	PART NO.	DESCRIPTION	Q'TY	REMARKS
1	43111-88L40-0EP	BRACKET, SWIVEL (L) (BLACK)	1	
2	43211-88L00	BUSH, SWIVEL BRACKET	2	
3	43711-97E01	BUSH, STEERING	2	
4	43750-88L21-0EP	BRACKET, STEERING (L) (BLACK)	1	
5	22511-99011	NIPPLE, GREASE	4	
6	36894-87D00	LEAD (CLAMP TO SWIVEL)	1	
7	36895-87D01	LEAD (SWIVEL TO MOUNT BRKT)	1	
8	36895-87D01	LEAD (SWIVEL TO HOUSING)	1	
9	09125-06063	SCREW (6X10)	4	
10	09125-05050	SCREW (5X8)	1	
11	43119-88L00	PLATE, SWIVEL BRKT LOWER STBD	1	
12	43119-88L10	PLATE, SWIVEL BRKT LOWER PORT	1	
13	09125-06067	SCREW (6X16)	2	
14	43114-88L00	WASHER, SWIVEL TO CLAMP BRKT	2	
15	09160-39003	WASHER (39.5X58X0.3)	2	
16	09282-39001	OIL SEAL (39X51X5)	1	
17	09160-39002	WASHER (39.5X58X1)	2	
18	09380-38003	CIRCLIP	1	
19	41221-88L00	LEVER, TILT LOCK STBD	1	
20	41280-88L10	LEVER, TILT LOCK PORT	1	
21	41224-88L00	BUSH, TILT LOCK LEVER	2	
22	29141-93J00	NUT, TILT LOCK LEVER STBD	1	
23	41231-88L01	LINK, TILT LOCK LEVER	1	
24	41234-88L00	ARM, TILT LOCK LINK	1	
25	45731-96312	BRACKET, SPRING	1	
26	09125-06063	SCREW (6X10)	1	
27	09443-10043	SPRING	1	

FIG.336N

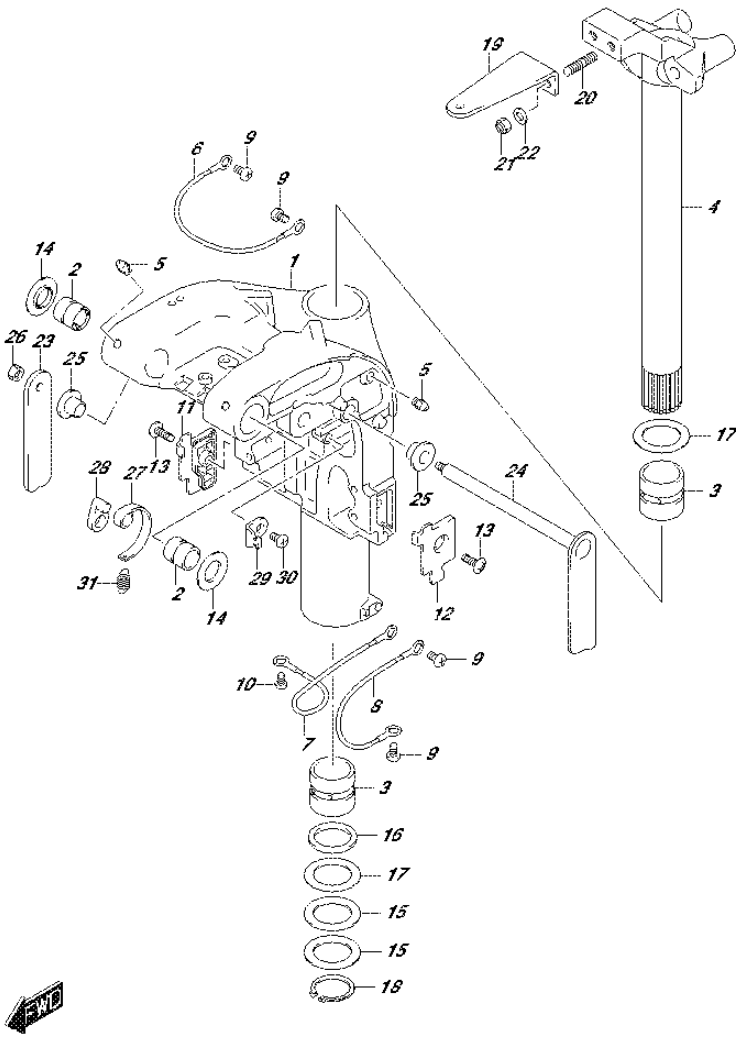

FIG.336N (3-B-8) SWIVEL BRACKET (DF50AVT E01)

REF NO.	PART NO.	DESCRIPTION	Q'TY	REMARKS
1	43111-88L50-0EP	BRACKET, SWIVEL (S) (BLACK)	1	W/TRANSOM(L)
2	43211-88L00	BUSH, SWIVEL BRACKET	2	
3	43711-97E01	BUSH, STEERING	2	
4	43750-88L31-0EP	BRACKET, STEERING (S) (BLACK)	1	W/TRANSOM(L)
5	22511-99011	NIPPLE, GREASE	4	
6	36894-87D00	LEAD (CLAMP TO SWIVEL)	1	
7	36895-87D01	LEAD (SWIVEL TO MOUNT BRKT)	1	
8	36895-87D01	LEAD (SWIVEL TO HOUSING)	1	
9	09125-06063	SCREW (6X10)	4	
10	09125-05050	SCREW (5X8)	1	
11	43119-88L00	PLATE, SWIVEL BRKT LOWER STBD	1	
12	43119-88L10	PLATE, SWIVEL BRKT LOWER PORT	1	
13	09125-06067	SCREW (6X16)	2	
14	43114-88L00	WASHER, SWIVEL TO CLAMP BRKT	2	
15	09160-39003	WASHER (39.5X58X0.3)	2	
16	09282-39001	OIL SEAL (39X51X5)	1	
17	09160-39002	WASHER (39.5X58X1)	2	
18	09380-38003	CIRCLIP	1	
19	43755-88L00-0EP	ATTACHMENT, STEERING BRKT (BLACK)	1	
20	09108-10161	STUD BOLT	2	
21	09159-10050	NUT	2	
22	09160-10141	WASHER (10.5X19X2)	2	
23	41221-88L00	LEVER, TILT LOCK STBD	1	
24	41280-88L10	LEVER, TILT LOCK PORT	1	
25	41224-88L00	BUSH, TILT LOCK LEVER	2	
26	29141-93J00	NUT, TILT LOCK LEVER STBD	1	
27	41231-88L01	LINK, TILT LOCK LEVER	1	
28	41234-88L00	ARM, TILT LOCK LINK	1	
29	45731-96312	BRACKET, SPRING	1	
30	09125-06063	SCREW (6X10)	1	
31	09443-10043	SPRING	1	

FIG.336P

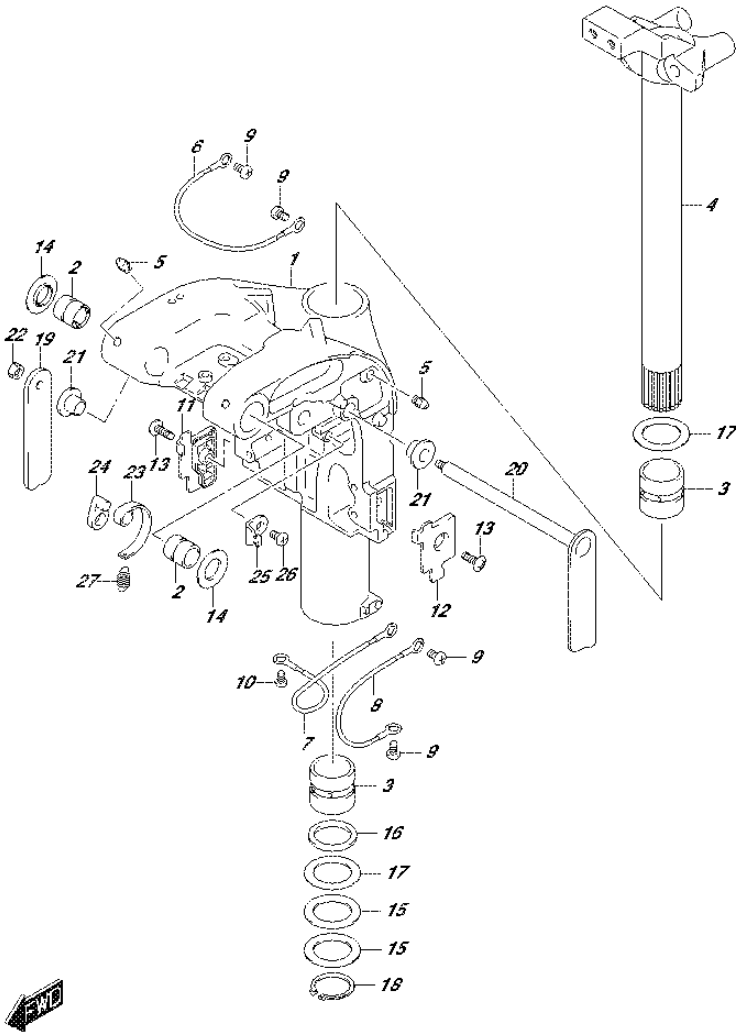

FIG.336P (3-B-9) SWIVEL BRACKET (DF50AVTH E01)

REF NO.	PART NO.	DESCRIPTION	Q'TY	REMARKS
1	43111-88L50-0EP	BRACKET, SWIVEL (S) (BLACK)	1	W/TRANSOM(L)
2	43211-88L00	BUSH, SWIVEL BRACKET	2	
3	43711-97E01	BUSH, STEERING	2	
4	43750-88L31-0EP	BRACKET, STEERING (S) (BLACK)	1	W/TRANSOM(L)
5	22511-99011	NIPPLE, GREASE	4	
6	36894-87D00	LEAD (CLAMP TO SWIVEL)	1	
7	36895-87D01	LEAD (SWIVEL TO MOUNT BRKT)	1	
8	36895-87D01	LEAD (SWIVEL TO HOUSING)	1	
9	09125-06063	SCREW (6X10)	4	
10	09125-05050	SCREW (5X8)	1	
11	43119-88L00	PLATE, SWIVEL BRKT LOWER STBD	1	
12	43119-88L10	PLATE, SWIVEL BRKT LOWER PORT	1	
13	09125-06067	SCREW (6X16)	2	
14	43114-88L00	WASHER, SWIVEL TO CLAMP BRKT	2	
15	09160-39003	WASHER (39.5X58X0.3)	2	
16	09282-39001	OIL SEAL (39X51X5)	1	
17	09160-39002	WASHER (39.5X58X1)	2	
18	09380-38003	CIRCLIP	1	
19	41221-88L00	LEVER, TILT LOCK STBD	1	
20	41280-88L10	LEVER, TILT LOCK PORT	1	
21	41224-88L00	BUSH, TILT LOCK LEVER	2	
22	29141-93J00	NUT, TILT LOCK LEVER STBD	1	
23	41231-88L01	LINK, TILT LOCK LEVER	1	
24	41234-88L00	ARM, TILT LOCK LINK	1	
25	45731-96312	BRACKET, SPRING	1	
26	09125-06063	SCREW (6X10)	1	
27	09443-10043	SPRING	1	

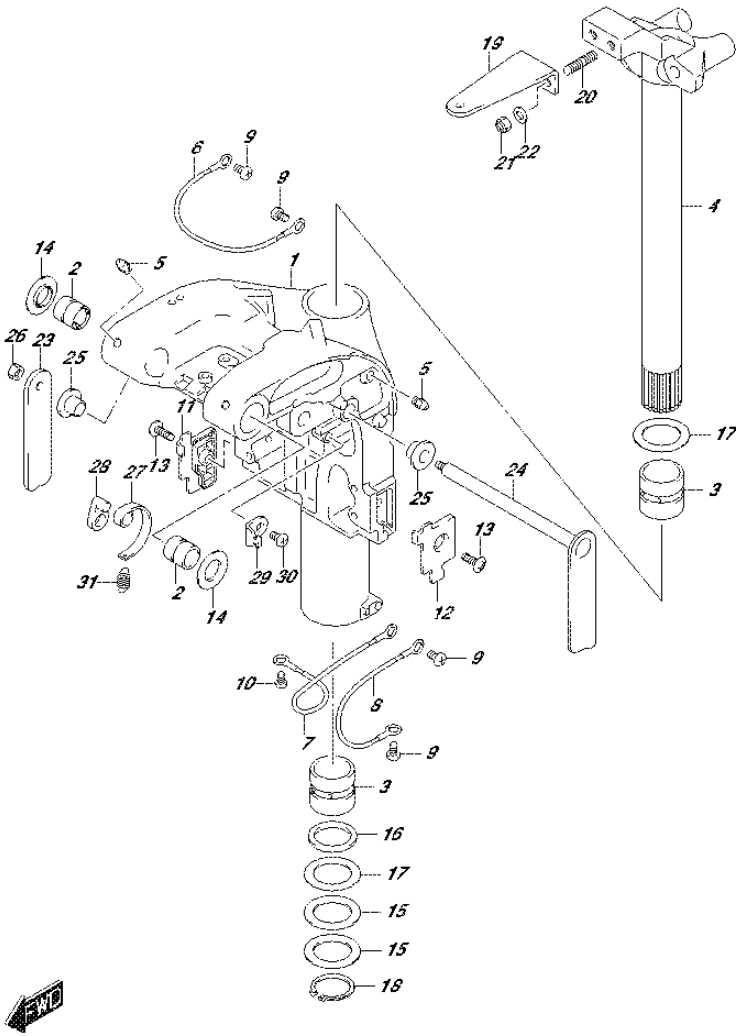

FIG.336R (3-B-10) SWIVEL BRACKET (DF60AVT E01)

REF NO.	PART NO.	DESCRIPTION	Q'TY	REMARKS
1-1	43111-88L50-0EP	BRACKET, SWIVEL (S) (BLACK)	1	W/TRANSOM(L)
1-2	43111-88L40-0EP	BRACKET, SWIVEL (L) (BLACK)	1	W/TRANSOM(X)
2	43211-88L00	BUSH, SWIVEL BRACKET	2	
3	43711-97E01	BUSH, STEERING	2	
4-1	43750-88L31-0EP	BRACKET, STEERING (S) (BLACK)	1	W/TRANSOM(L)
4-2	43750-88L21-0EP	BRACKET, STEERING (L) (BLACK)	1	W/TRANSOM(X)
5	22511-99011	NIPPLE, GREASE	4	
6	36894-87D00	LEAD (CLAMP TO SWIVEL)	1	
7	36895-87D01	LEAD (SWIVEL TO MOUNT BRKT)	1	
8	36895-87D01	LEAD (SWIVEL TO HOUSING)	1	
9	09125-06063	SCREW (6X10)	4	
10	09125-05050	SCREW (5X8)	1	
11	43119-88L00	PLATE, SWIVEL BRKT LOWER STBD	1	
12	43119-88L10	PLATE, SWIVEL BRKT LOWER PORT	1	
13	09125-06067	SCREW (6X16)	2	
14	43114-88L00	WASHER, SWIVEL TO CLAMP BRKT	2	
15	09160-39003	WASHER (39.5X58X0.3)	2	
16	09282-39001	OIL SEAL (39X51X5)	1	
17	09160-39002	WASHER (39.5X58X1)	2	
18	09380-38003	CIRCLIP	1	
19	43755-88L00-0EP	ATTACHMENT, STEERING BRKT (BLACK)	1	
20	09108-10161	STUD BOLT	2	
21	09159-10050	NUT	2	
22	09160-10141	WASHER (10.5X19X2)	2	
23	41221-88L00	LEVER, TILT LOCK STBD	1	
24	41280-88L10	LEVER, TILT LOCK PORT	1	
25	41224-88L00	BUSH, TILT LOCK LEVER	2	
26	29141-93J00	NUT, TILT LOCK LEVER STBD	1	
27	41231-88L01	LINK, TILT LOCK LEVER	1	
28	41234-88L00	ARM, TILT LOCK LINK	1	
29	45731-96312	BRACKET, SPRING	1	
30	09125-06063	SCREW (6X10)	1	
31	09443-10043	SPRING	1	

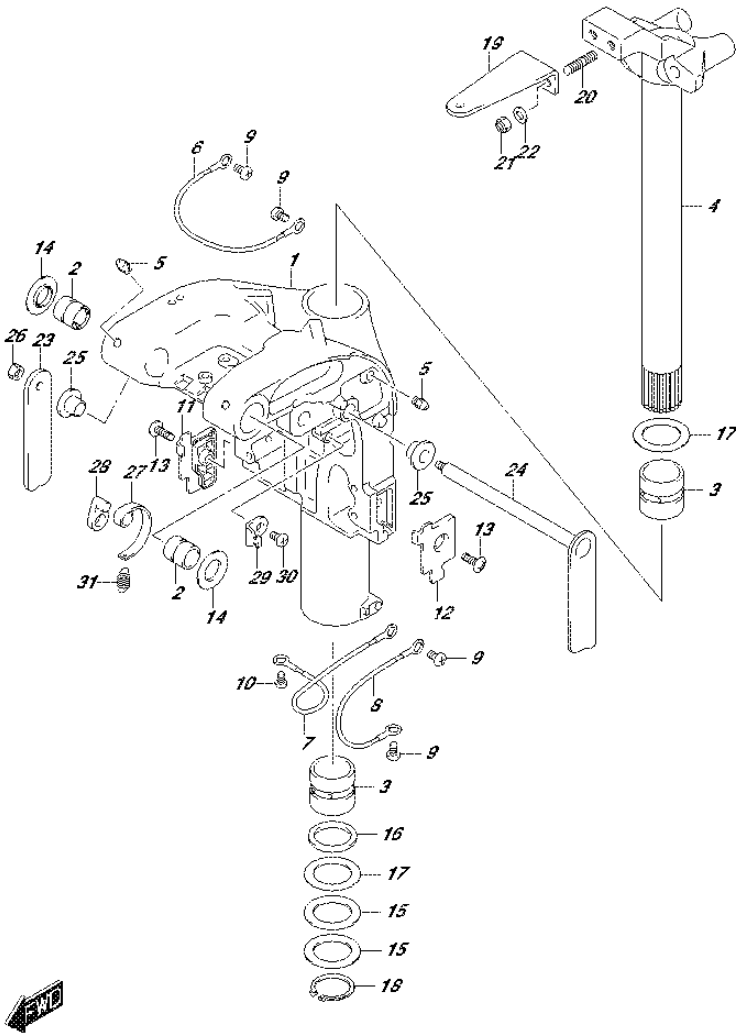

FIG.336S (3-B-11) SWIVEL BRACKET (DF60AVT E40)

REF NO.	PART NO.	DESCRIPTION	Q'TY	REMARKS
1-1	43111-88L50-0EP	BRACKET, SWIVEL (S) (BLACK)	1	W/TRANSOM(L)
1-2	43111-88L40-0EP	BRACKET, SWIVEL (L) (BLACK)	1	W/TRANSOM(X)
2	43211-88L00	BUSH, SWIVEL BRACKET	2	
3	43711-97E01	BUSH, STEERING	2	
4-1	43750-88L31-0EP	BRACKET, STEERING (S) (BLACK)	1	W/TRANSOM(L)
4-2	43750-88L21-0EP	BRACKET, STEERING (L) (BLACK)	1	W/TRANSOM(X)
5	22511-99011	NIPPLE, GREASE	4	
6	36894-87D00	LEAD (CLAMP TO SWIVEL)	1	
7	36895-87D01	LEAD (SWIVEL TO MOUNT BRKT)	1	
8	36895-87D01	LEAD (SWIVEL TO HOUSING)	1	
9	09125-06063	SCREW (6X10)	4	
10	09125-05050	SCREW (5X8)	1	
11	43119-88L00	PLATE, SWIVEL BRKT LOWER STBD	1	
12	43119-88L10	PLATE, SWIVEL BRKT LOWER PORT	1	
13	09125-06067	SCREW (6X16)	2	
14	43114-88L00	WASHER, SWIVEL TO CLAMP BRKT	2	
15	09160-39003	WASHER (39.5X58X0.3)	2	
16	09282-39001	OIL SEAL (39X51X5)	1	
17	09160-39002	WASHER (39.5X58X1)	2	
18	09380-38003	CIRCLIP	1	
19	43755-88L00-0EP	ATTACHMENT, STEERING BRKT (BLACK)	1	
20	09108-10161	STUD BOLT	2	
21	09159-10050	NUT	2	
22	09160-10141	WASHER (10.5X19X2)	2	
23	41221-88L00	LEVER, TILT LOCK STBD	1	
24	41280-88L10	LEVER, TILT LOCK PORT	1	
25	41224-88L00	BUSH, TILT LOCK LEVER	2	
26	29141-93J00	NUT, TILT LOCK LEVER STBD	1	
27	41231-88L01	LINK, TILT LOCK LEVER	1	
28	41234-88L00	ARM, TILT LOCK LINK	1	
29	45731-96312	BRACKET, SPRING	1	
30	09125-06063	SCREW (6X10)	1	
31	09443-10043	SPRING	1	

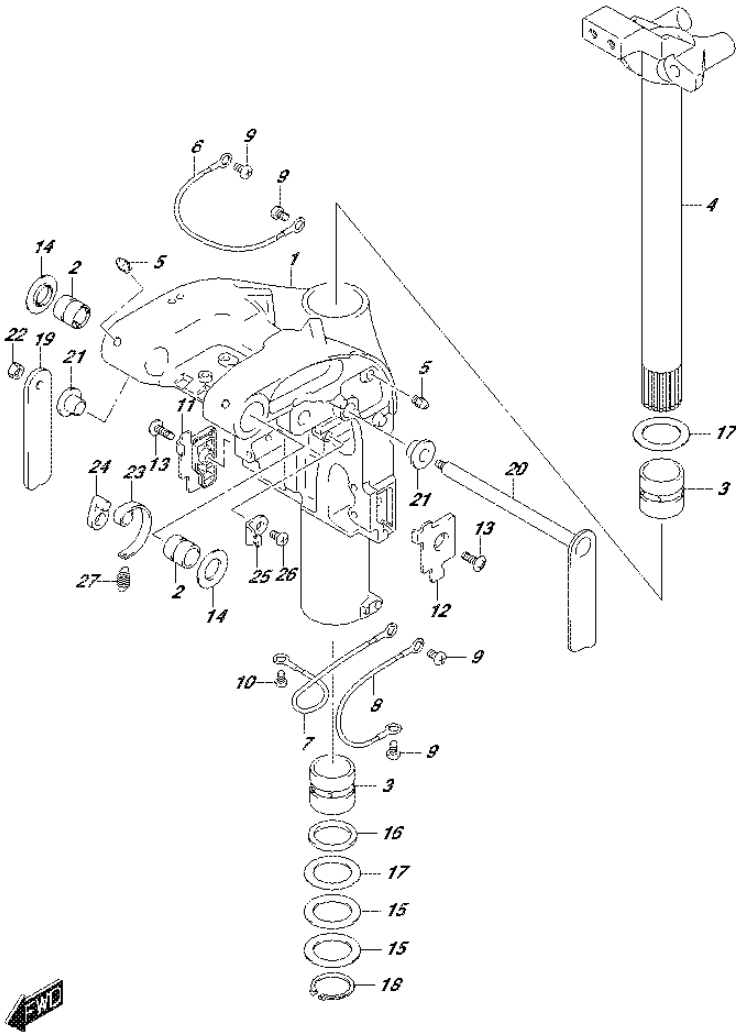

FIG.336T (3-B-12) SWIVEL BRACKET (DF60AVTH E01)

REF NO.	PART NO.	DESCRIPTION	Q'TY	REMARKS
1-1	43111-88L50-0EP	BRACKET, SWIVEL (S) (BLACK)	1	W/TRANSOM(L)
1-2	43111-88L40-0EP	BRACKET, SWIVEL (L) (BLACK)	1	W/TRANSOM(X)
2	43211-88L00	BUSH, SWIVEL BRACKET	2	
3	43711-97E01	BUSH, STEERING	2	
4-1	43750-88L31-0EP	BRACKET, STEERING (S) (BLACK)	1	W/TRANSOM(L)
4-2	43750-88L21-0EP	BRACKET, STEERING (L) (BLACK)	1	W/TRANSOM(X)
5	22511-99011	NIPPLE, GREASE	4	
6	36894-87D00	LEAD (CLAMP TO SWIVEL)	1	
7	36895-87D01	LEAD (SWIVEL TO MOUNT BRKT)	1	
8	36895-87D01	LEAD (SWIVEL TO HOUSING)	1	
9	09125-06063	SCREW (6X10)	4	
10	09125-05050	SCREW (5X8)	1	
11	43119-88L00	PLATE, SWIVEL BRKT LOWER STBD	1	
12	43119-88L10	PLATE, SWIVEL BRKT LOWER PORT	1	
13	09125-06067	SCREW (6X16)	2	
14	43114-88L00	WASHER, SWIVEL TO CLAMP BRKT	2	
15	09160-39003	WASHER (39.5X58X0.3)	2	
16	09282-39001	OIL SEAL (39X51X5)	1	
17	09160-39002	WASHER (39.5X58X1)	2	
18	09380-38003	CIRCLIP	1	
19	41221-88L00	LEVER, TILT LOCK STBD	1	
20	41280-88L10	LEVER, TILT LOCK PORT	1	
21	41224-88L00	BUSH, TILT LOCK LEVER	2	
22	29141-93J00	NUT, TILT LOCK LEVER STBD	1	
23	41231-88L01	LINK, TILT LOCK LEVER	1	
24	41234-88L00	ARM, TILT LOCK LINK	1	
25	45731-96312	BRACKET, SPRING	1	
26	09125-06063	SCREW (6X10)	1	
27	09443-10043	SPRING	1	

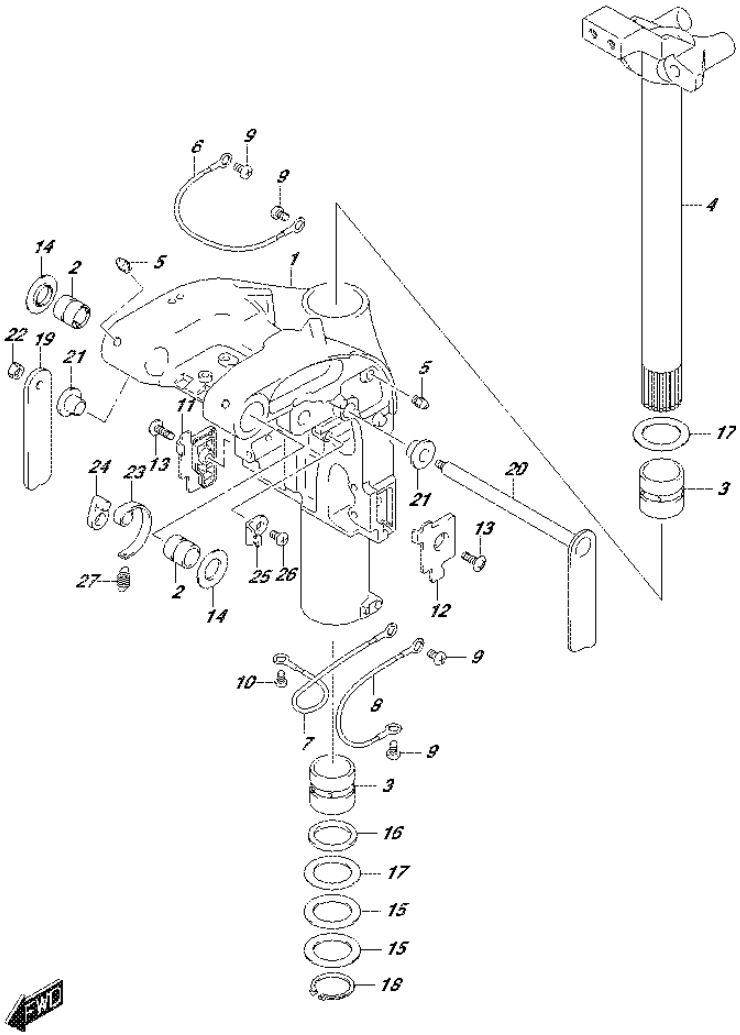

FIG.336U (3-B-13) SWIVEL BRACKET (DF60AVTH E40)

REF NO.	PART NO.	DESCRIPTION	Q'TY	REMARKS
1-1	43111-88L50-0EP	BRACKET, SWIVEL (S) (BLACK)	1	W/TRANSOM(L)
1-2	43111-88L40-0EP	BRACKET, SWIVEL (L) (BLACK)	1	W/TRANSOM(X)
2	43211-88L00	BUSH, SWIVEL BRACKET	2	
3	43711-97E01	BUSH, STEERING	2	
4-1	43750-88L31-0EP	BRACKET, STEERING (S) (BLACK)	1	W/TRANSOM(L)
4-2	43750-88L21-0EP	BRACKET, STEERING (L) (BLACK)	1	W/TRANSOM(X)
5	22511-99011	NIPPLE, GREASE	4	
6	36894-87D00	LEAD (CLAMP TO SWIVEL)	1	
7	36895-87D01	LEAD (SWIVEL TO MOUNT BRKT)	1	
8	36895-87D01	LEAD (SWIVEL TO HOUSING)	1	
9	09125-06063	SCREW (6X10)	4	
10	09125-05050	SCREW (5X8)	1	
11	43119-88L00	PLATE, SWIVEL BRKT LOWER STBD	1	
12	43119-88L10	PLATE, SWIVEL BRKT LOWER PORT	1	
13	09125-06067	SCREW (6X16)	2	
14	43114-88L00	WASHER, SWIVEL TO CLAMP BRKT	2	
15	09160-39003	WASHER (39.5X58X0.3)	2	
16	09282-39001	OIL SEAL (39X51X5)	1	
17	09160-39002	WASHER (39.5X58X1)	2	
18	09380-38003	CIRCLIP	1	
19	41221-88L00	LEVER, TILT LOCK STBD	1	
20	41280-88L10	LEVER, TILT LOCK PORT	1	
21	41224-88L00	BUSH, TILT LOCK LEVER	2	
22	29141-93J00	NUT, TILT LOCK LEVER STBD	1	
23	41231-88L01	LINK, TILT LOCK LEVER	1	
24	41234-88L00	ARM, TILT LOCK LINK	1	
25	45731-96312	BRACKET, SPRING	1	
26	09125-06063	SCREW (6X10)	1	
27	09443-10043	SPRING	1	

FIG.337A

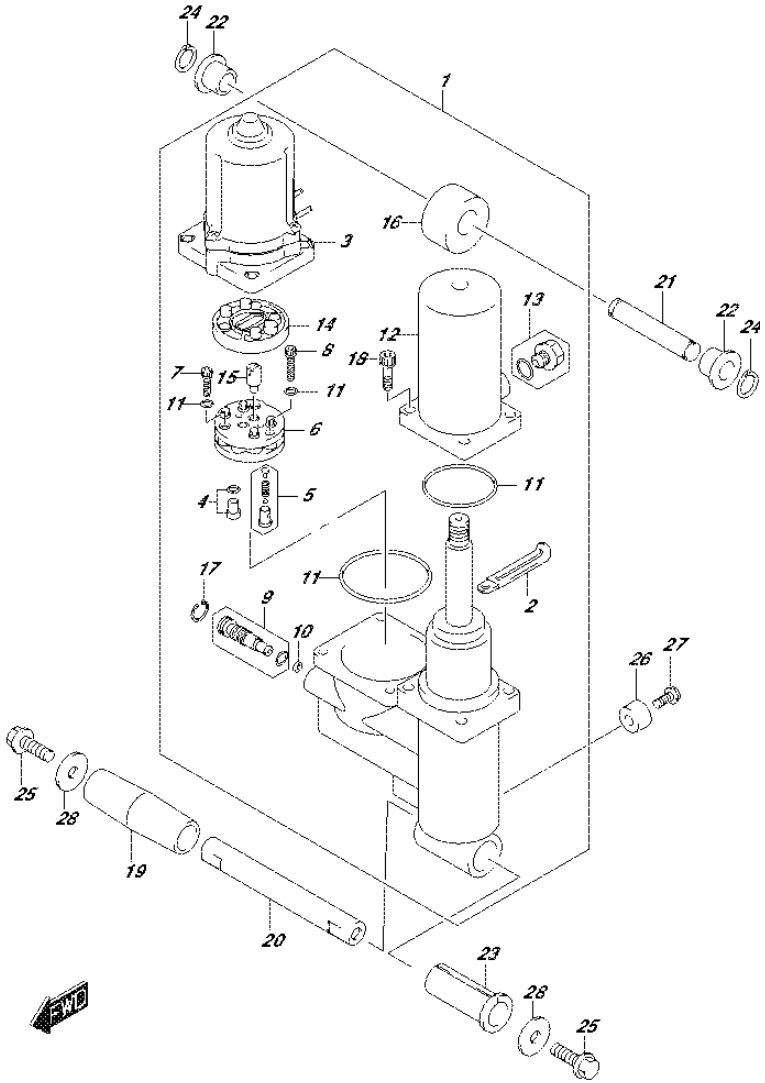

FIG.337A (3-B-14) TRIM CYLINDER (DF40A E01)

REF NO.	PART NO.	DESCRIPTION	Q'TY	REMARKS
1	48000-88L15	TRIM ASSY, POWER WITH TILT	1	
2	29404-93J10	.CLAMP	1	
3	38100-88L11	.MOTOR ASSY, PTT	1	
4	48320-87J10	.VALVE, UPPER PRESSURE	1	
5	48330-87J10	.VALVE, DOWN PRESSURE	1	
6	48510-97E00	.PUMP ASSY, GEAR	1	
7	48541-87J10	.BOLT	2	
8	48541-87J20	.BOLT	1	
9	48551-88L00	.VALVE, MANUAL	1	
10	48553-88L00	.SEAL WASHER	1	
11	48557-87J10	.O RING SET	1	
12	48571-88L00	.TANK, RESERVOIR	1	
13	48572-87L00	.PLUG	1	
14	48582-97E01	.FILTER	1	
15	48583-87J10	.JOINT, DRIVE	1	
16	48611-88L00	.JOINT, METAL	1	
17	48681-87J11	.CIRCLIP	1	
18	48862-87J20	.BOLT, TANK	4	
19	47225-87J00	COLLAR, TILT CYLINDER LOWER	1	
20	48121-89J10	SHAFT, TILT CYL LOWER	1	
21	48321-89J11	SHAFT, TILT CYL UPPER	1	
22	48325-89J00	BUSH, TILT CYL UPPER	2	
23	48326-87J00	BUSH, TILT CYL LOWER	1	
24	09380-12002	SNAP RING	2	
25	09116-10179	BOLT	2	
26	55321-87J00	ANODE, PROTECTION	1	
27	09103-06281	BOLT (6X14)	1	
28	09160-10139	WASHER (10.5X35X3)	2	

FIG.337B

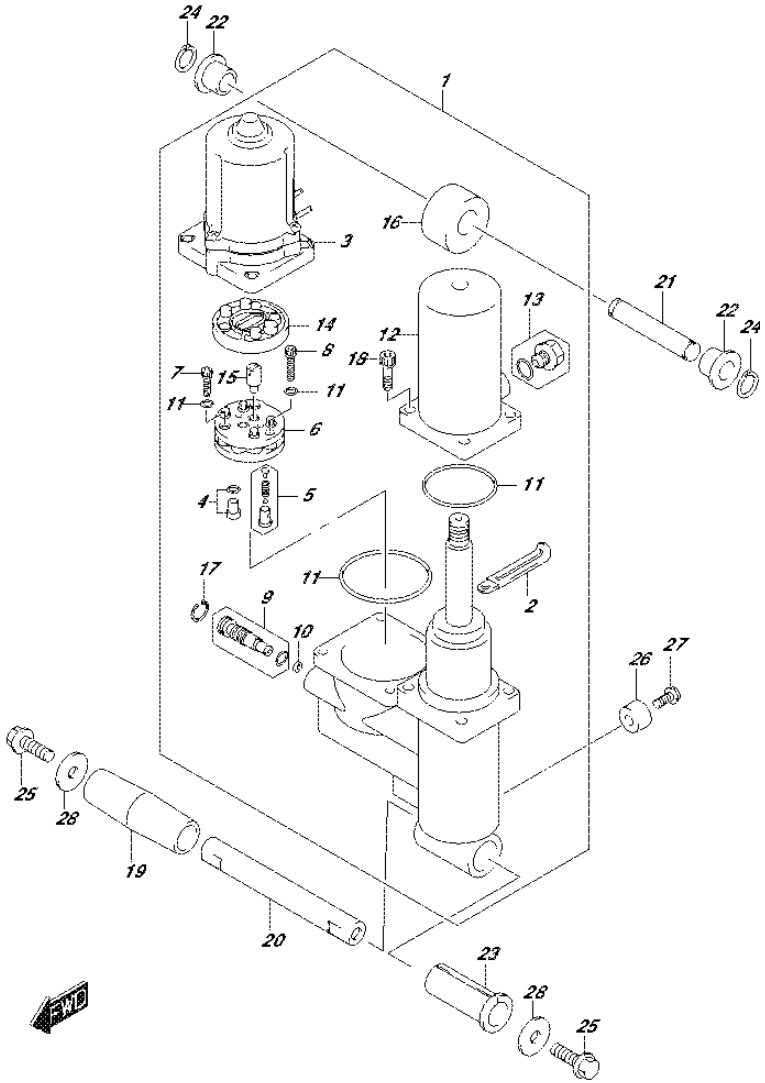

FIG.337B (3-B-15) TRIM CYLINDER (DF40ATH E01)

REF NO.	PART NO.	DESCRIPTION	Q'TY	REMARKS
1	48000-88L15	TRIM ASSY, POWER WITH TILT	1	
2	29404-93J10	.CLAMP	1	
3	38100-88L11	.MOTOR ASSY, PTT	1	
4	48320-87J10	.VALVE, UPPER PRESSURE	1	
5	48330-87J10	.VALVE, DOWN PRESSURE	1	
6	48510-97E00	.PUMP ASSY, GEAR	1	
7	48541-87J10	.BOLT	2	
8	48541-87J20	.BOLT	1	
9	48551-88L00	.VALVE, MANUAL	1	
10	48553-88L00	.SEAL WASHER	1	
11	48557-87J10	.O RING SET	1	
12	48571-88L00	.TANK, RESERVOIR	1	
13	48572-87L00	.PLUG	1	
14	48582-97E01	.FILTER	1	
15	48583-87J10	.JOINT, DRIVE	1	
16	48611-88L00	.JOINT, METAL	1	
17	48681-87J11	.CIRCLIP	1	
18	48862-87J20	.BOLT, TANK	4	
19	47225-87J00	COLLAR, TILT CYLINDER LOWER	1	
20	48121-89J10	SHAFT, TILT CYL LOWER	1	
21	48321-89J11	SHAFT, TILT CYL UPPER	1	
22	48325-89J00	BUSH, TILT CYL UPPER	2	
23	48326-87J00	BUSH, TILT CYL LOWER	1	
24	09380-12002	SNAP RING	2	
25	09116-10179	BOLT	2	
26	55321-87J00	ANODE, PROTECTION	1	
27	09103-06281	BOLT (6X14)	1	
28	09160-10139	WASHER (10.5X35X3)	2	

FIG.337C

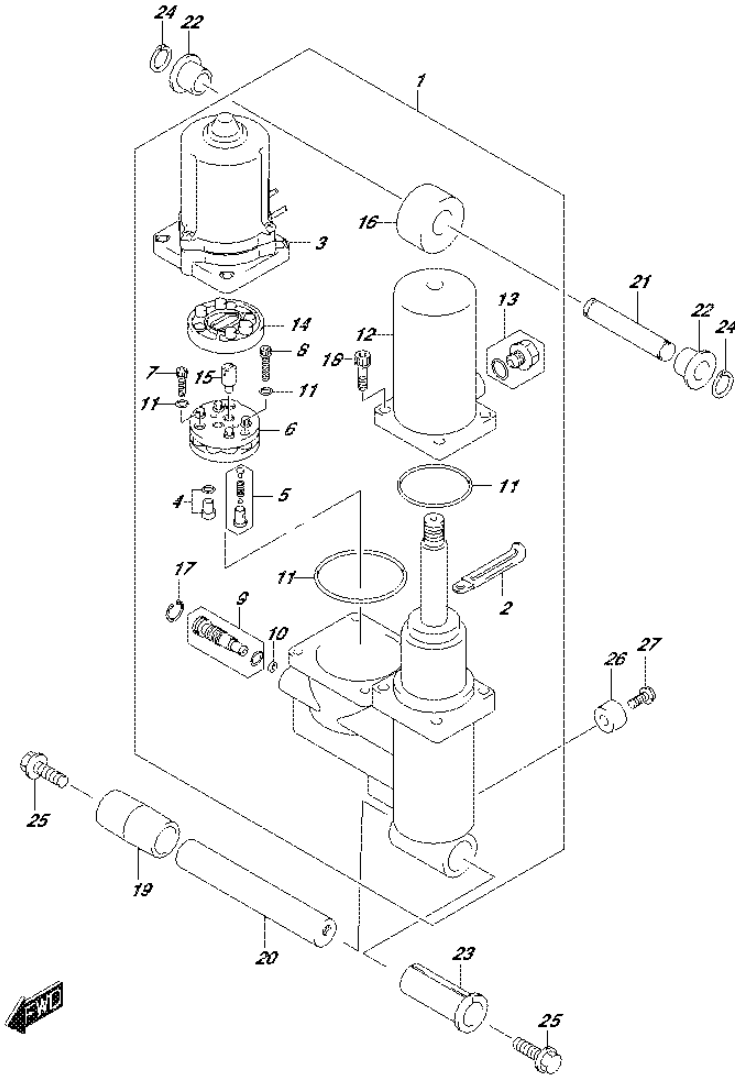

FIG.337C (3-C-2) TRIM CYLINDER (DF40AST E34)

REF NO.	PART NO.	DESCRIPTION	Q'TY	REMARKS
1	48000-88L15	TRIM ASSY, POWER WITH TILT	1	
2	29404-93J10	.CLAMP	1	
3	38100-88L11	.MOTOR ASSY, PTT	1	
4	48320-87J10	.VALVE, UPPER PRESSURE	1	
5	48330-87J10	.VALVE, DOWN PRESSURE	1	
6	48510-97E00	.PUMP ASSY, GEAR	1	
7	48541-87J10	.BOLT	2	
8	48541-87J20	.BOLT	1	
9	48551-88L00	.VALVE, MANUAL	1	
10	48553-88L00	.SEAL WASHER	1	
11	48557-87J10	.O RING SET	1	
12	48571-88L00	.TANK, RESERVOIR	1	
13	48572-87L00	.PLUG	1	
14	48582-97E01	.FILTER	1	
15	48583-87J10	.JOINT, DRIVE	1	
16	48611-88L00	.JOINT, METAL	1	
17	48681-87J11	.CIRCLIP	1	
18	48862-87J20	.BOLT, TANK	4	
19	47225-88L00	COLLAR, TILT CYLINDER LOWER	1	
20	48121-88L00	SHAFT, TILT CYL LOWER	1	
21	48321-89J11	SHAFT, TILT CYL UPPER	1	
22	48325-89J00	BUSH, TILT CYL UPPER	2	
23	48326-87J00	BUSH, TILT CYL LOWER	1	
24	09380-12002	SNAP RING	2	
25	09116-10179	BOLT	2	
26	55321-87J00	ANODE, PROTECTION	1	
27	09103-06281	BOLT (6X14)	1	

FIG.337D

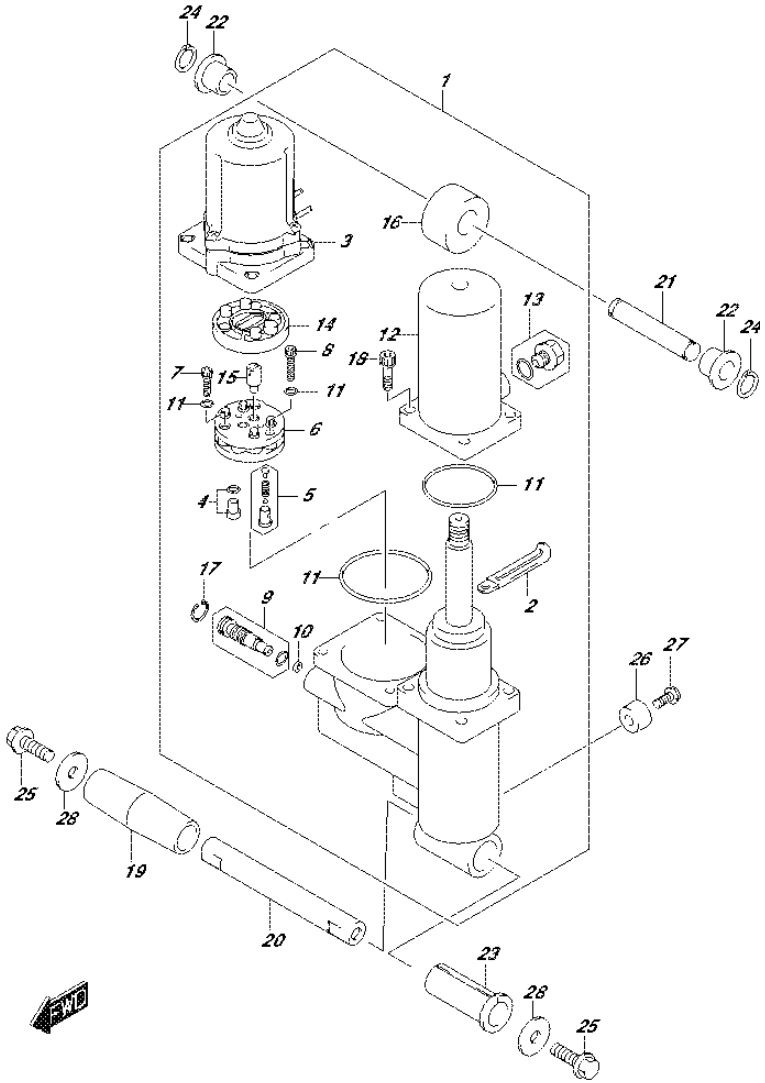

FIG.337D (3-C-3) TRIM CYLINDER (DF50A E01)

REF NO.	PART NO.	DESCRIPTION	Q'TY	REMARKS
1	48000-88L15	TRIM ASSY, POWER WITH TILT	1	
2	29404-93J10	.CLAMP	1	
3	38100-88L11	.MOTOR ASSY, PTT	1	
4	48320-87J10	.VALVE, UPPER PRESSURE	1	
5	48330-87J10	.VALVE, DOWN PRESSURE	1	
6	48510-97E00	.PUMP ASSY, GEAR	1	
7	48541-87J10	.BOLT	2	
8	48541-87J20	.BOLT	1	
9	48551-88L00	.VALVE, MANUAL	1	
10	48553-88L00	.SEAL WASHER	1	
11	48557-87J10	.O RING SET	1	
12	48571-88L00	.TANK, RESERVOIR	1	
13	48572-87L00	.PLUG	1	
14	48582-97E01	.FILTER	1	
15	48583-87J10	.JOINT, DRIVE	1	
16	48611-88L00	.JOINT, METAL	1	
17	48681-87J11	.CIRCLIP	1	
18	48862-87J20	.BOLT, TANK	4	
19	47225-87J00	COLLAR, TILT CYLINDER LOWER	1	
20	48121-89J10	SHAFT, TILT CYL LOWER	1	
21	48321-89J11	SHAFT, TILT CYL UPPER	1	
22	48325-89J00	BUSH, TILT CYL UPPER	2	
23	48326-87J00	BUSH, TILT CYL LOWER	1	
24	09380-12002	SNAP RING	2	
25	09116-10179	BOLT	2	
26	55321-87J00	ANODE, PROTECTION	1	
27	09103-06281	BOLT (6X14)	1	
28	09160-10139	WASHER (10.5X35X3)	2	

FIG.337E

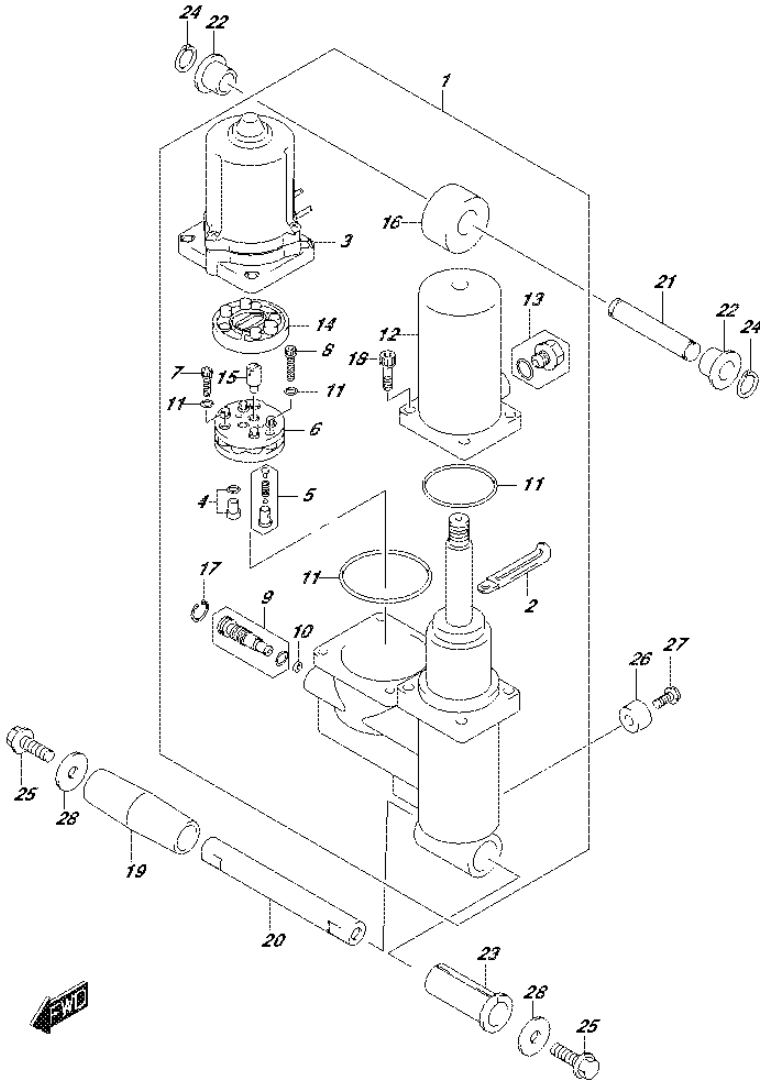

FIG.337E (3-C-4) TRIM CYLINDER (DF50ATH E01)

REF NO.	PART NO.	DESCRIPTION	Q'TY	REMARKS
1	48000-88L15	TRIM ASSY, POWER WITH TILT	1	
2	29404-93J10	.CLAMP	1	
3	38100-88L11	.MOTOR ASSY, PTT	1	
4	48320-87J10	.VALVE, UPPER PRESSURE	1	
5	48330-87J10	.VALVE, DOWN PRESSURE	1	
6	48510-97E00	.PUMP ASSY, GEAR	1	
7	48541-87J10	.BOLT	2	
8	48541-87J20	.BOLT	1	
9	48551-88L00	.VALVE, MANUAL	1	
10	48553-88L00	.SEAL WASHER	1	
11	48557-87J10	.O RING SET	1	
12	48571-88L00	.TANK, RESERVOIR	1	
13	48572-87L00	.PLUG	1	
14	48582-97E01	.FILTER	1	
15	48583-87J10	.JOINT, DRIVE	1	
16	48611-88L00	.JOINT, METAL	1	
17	48681-87J11	.CIRCLIP	1	
18	48862-87J20	.BOLT, TANK	4	
19	47225-87J00	COLLAR, TILT CYLINDER LOWER	1	
20	48121-89J10	SHAFT, TILT CYL LOWER	1	
21	48321-89J11	SHAFT, TILT CYL UPPER	1	
22	48325-89J00	BUSH, TILT CYL UPPER	2	
23	48326-87J00	BUSH, TILT CYL LOWER	1	
24	09380-12002	SNAP RING	2	
25	09116-10179	BOLT	2	
26	55321-87J00	ANODE, PROTECTION	1	
27	09103-06281	BOLT (6X14)	1	
28	09160-10139	WASHER (10.5X35X3)	2	

FIG.337F

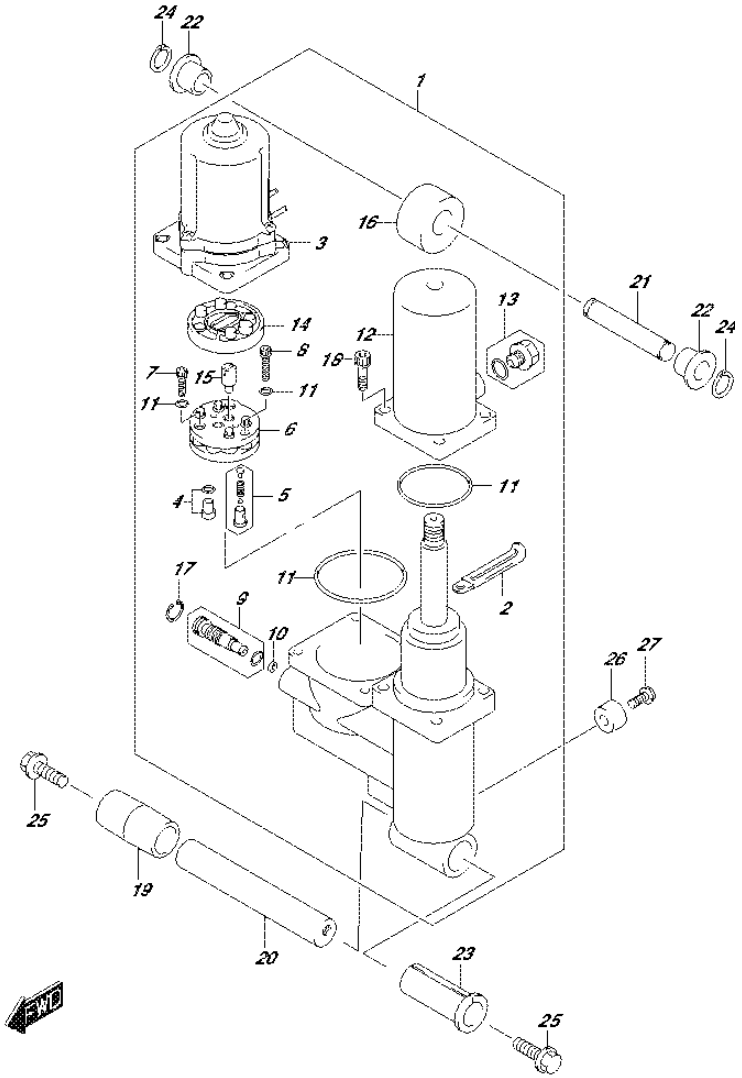

FIG.337F (3-C-5) TRIM CYLINDER (DF60A E01)

REF NO.	PART NO.	DESCRIPTION	Q'TY	REMARKS
1	48000-88L15	TRIM ASSY, POWER WITH TILT	1	
2	29404-93J10	.CLAMP	1	
3	38100-88L11	.MOTOR ASSY, PTT	1	
4	48320-87J10	.VALVE, UPPER PRESSURE	1	
5	48330-87J10	.VALVE, DOWN PRESSURE	1	
6	48510-97E00	.PUMP ASSY, GEAR	1	
7	48541-87J10	.BOLT	2	
8	48541-87J20	.BOLT	1	
9	48551-88L00	.VALVE, MANUAL	1	
10	48553-88L00	.SEAL WASHER	1	
11	48557-87J10	.O RING SET	1	
12	48571-88L00	.TANK, RESERVOIR	1	
13	48572-87L00	.PLUG	1	
14	48582-97E01	.FILTER	1	
15	48583-87J10	.JOINT, DRIVE	1	
16	48611-88L00	.JOINT, METAL	1	
17	48681-87J11	.CIRCLIP	1	
18	48862-87J20	.BOLT, TANK	4	
19	47225-88L00	COLLAR, TILT CYLINDER LOWER	1	
20	48121-88L00	SHAFT, TILT CYL LOWER	1	
21	48321-89J11	SHAFT, TILT CYL UPPER	1	
22	48325-89J00	BUSH, TILT CYL UPPER	2	
23	48326-87J00	BUSH, TILT CYL LOWER	1	
24	09380-12002	SNAP RING	2	
25	09116-10179	BOLT	2	
26	55321-87J00	ANODE, PROTECTION	1	
27	09103-06281	BOLT (6X14)	1	

FIG.337G

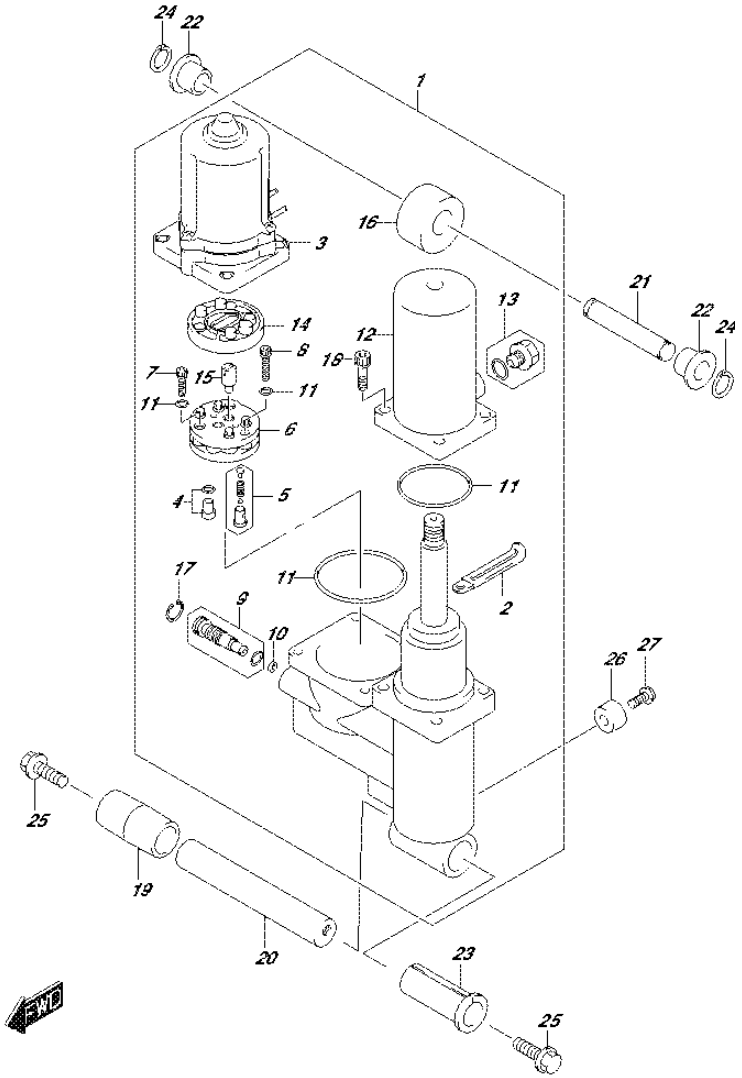

FIG.337G (3-C-6) TRIM CYLINDER (DF60A E40)

REF NO.	PART NO.	DESCRIPTION	Q'TY	REMARKS
1	48000-88L15	TRIM ASSY, POWER WITH TILT	1	
2	29404-93J10	.CLAMP	1	
3	38100-88L11	.MOTOR ASSY, PTT	1	
4	48320-87J10	.VALVE, UPPER PRESSURE	1	
5	48330-87J10	.VALVE, DOWN PRESSURE	1	
6	48510-97E00	.PUMP ASSY, GEAR	1	
7	48541-87J10	.BOLT	2	
8	48541-87J20	.BOLT	1	
9	48551-88L00	.VALVE, MANUAL	1	
10	48553-88L00	.SEAL WASHER	1	
11	48557-87J10	.O RING SET	1	
12	48571-88L00	.TANK, RESERVOIR	1	
13	48572-87L00	.PLUG	1	
14	48582-97E01	.FILTER	1	
15	48583-87J10	.JOINT, DRIVE	1	
16	48611-88L00	.JOINT, METAL	1	
17	48681-87J11	.CIRCLIP	1	
18	48862-87J20	.BOLT, TANK	4	
19	47225-88L00	COLLAR, TILT CYLINDER LOWER	1	
20	48121-88L00	SHAFT, TILT CYL LOWER	1	
21	48321-89J11	SHAFT, TILT CYL UPPER	1	
22	48325-89J00	BUSH, TILT CYL UPPER	2	
23	48326-87J00	BUSH, TILT CYL LOWER	1	
24	09380-12002	SNAP RING	2	
25	09116-10179	BOLT	2	
26	55321-87J00	ANODE, PROTECTION	1	
27	09103-06281	BOLT (6X14)	1	

FIG.337H

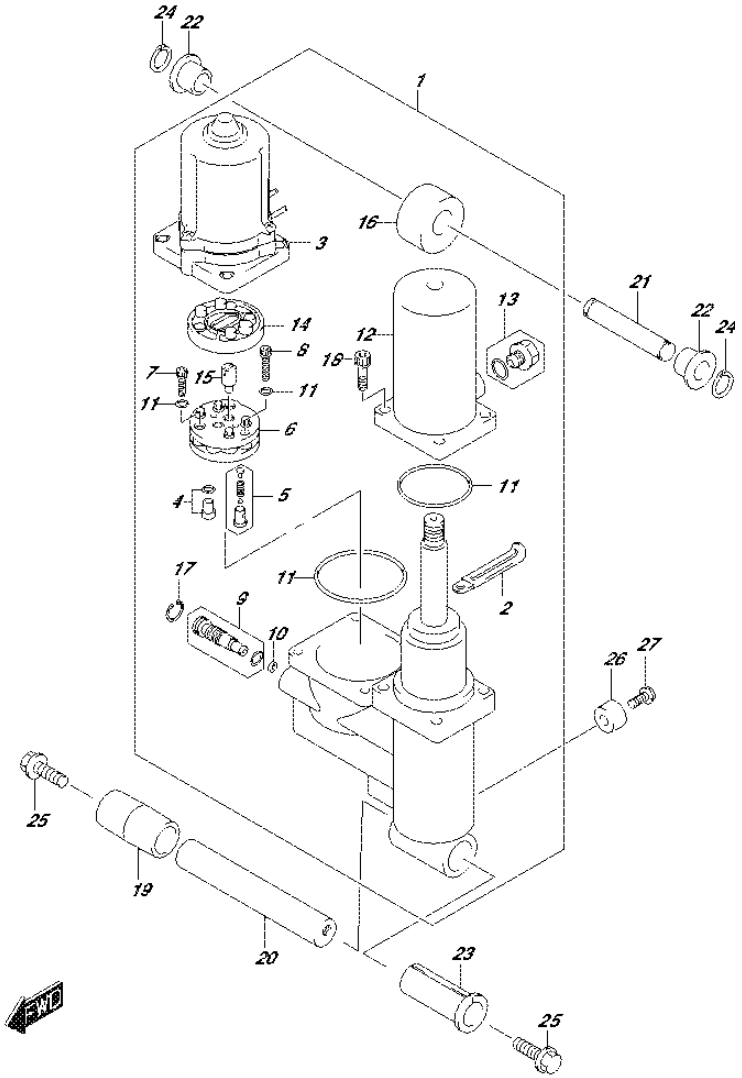

FIG.337H (3-C-7) TRIM CYLINDER (DF60ATH E01)

REF NO.	PART NO.	DESCRIPTION	Q'TY	REMARKS
1	48000-88L15	TRIM ASSY, POWER WITH TILT	1	
2	29404-93J10	.CLAMP	1	
3	38100-88L11	.MOTOR ASSY, PTT	1	
4	48320-87J10	.VALVE, UPPER PRESSURE	1	
5	48330-87J10	.VALVE, DOWN PRESSURE	1	
6	48510-97E00	.PUMP ASSY, GEAR	1	
7	48541-87J10	.BOLT	2	
8	48541-87J20	.BOLT	1	
9	48551-88L00	.VALVE, MANUAL	1	
10	48553-88L00	.SEAL WASHER	1	
11	48557-87J10	.O RING SET	1	
12	48571-88L00	.TANK, RESERVOIR	1	
13	48572-87L00	.PLUG	1	
14	48582-97E01	.FILTER	1	
15	48583-87J10	.JOINT, DRIVE	1	
16	48611-88L00	.JOINT, METAL	1	
17	48681-87J11	.CIRCLIP	1	
18	48862-87J20	.BOLT, TANK	4	
19	47225-88L00	COLLAR, TILT CYLINDER LOWER	1	
20	48121-88L00	SHAFT, TILT CYL LOWER	1	
21	48321-89J11	SHAFT, TILT CYL UPPER	1	
22	48325-89J00	BUSH, TILT CYL UPPER	2	
23	48326-87J00	BUSH, TILT CYL LOWER	1	
24	09380-12002	SNAP RING	2	
25	09116-10179	BOLT	2	
26	55321-87J00	ANODE, PROTECTION	1	
27	09103-06281	BOLT (6X14)	1	

FIG.337J

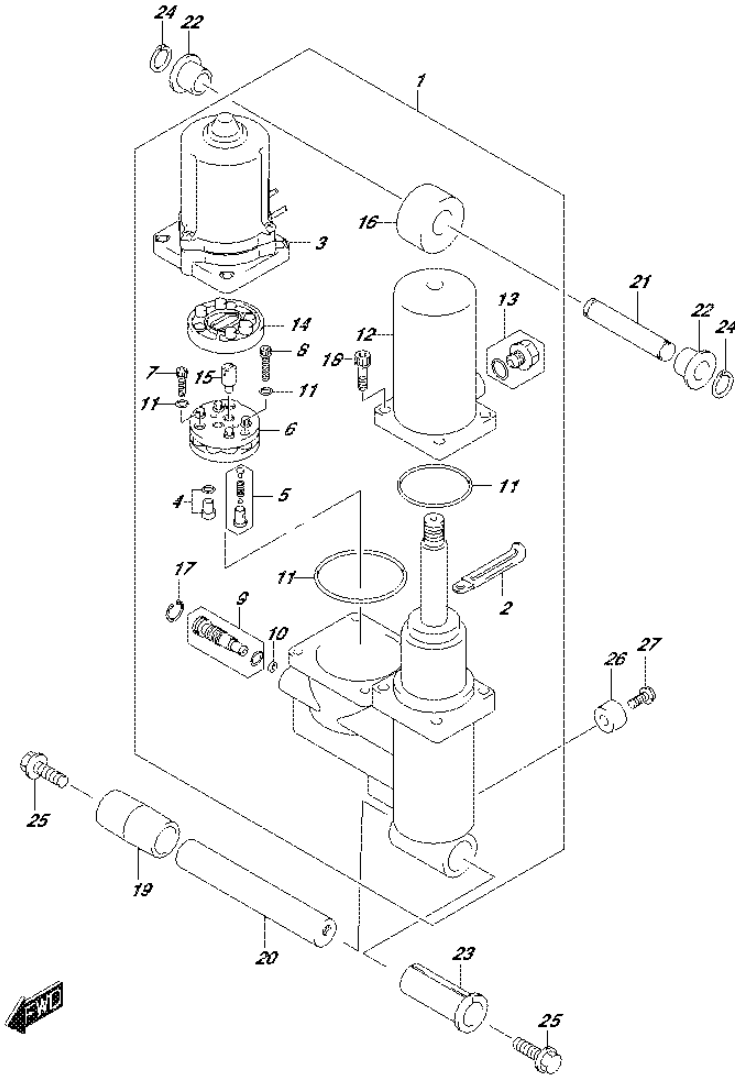

FIG.337J (3-C-8) TRIM CYLINDER (DF60ATH E40)

REF NO.	PART NO.	DESCRIPTION	Q'TY	REMARKS
1	48000-88L15	TRIM ASSY, POWER WITH TILT	1	
2	29404-93J10	.CLAMP	1	
3	38100-88L11	.MOTOR ASSY, PTT	1	
4	48320-87J10	.VALVE, UPPER PRESSURE	1	
5	48330-87J10	.VALVE, DOWN PRESSURE	1	
6	48510-97E00	.PUMP ASSY, GEAR	1	
7	48541-87J10	.BOLT	2	
8	48541-87J20	.BOLT	1	
9	48551-88L00	.VALVE, MANUAL	1	
10	48553-88L00	.SEAL WASHER	1	
11	48557-87J10	.O RING SET	1	
12	48571-88L00	.TANK, RESERVOIR	1	
13	48572-87L00	.PLUG	1	
14	48582-97E01	.FILTER	1	
15	48583-87J10	.JOINT, DRIVE	1	
16	48611-88L00	.JOINT, METAL	1	
17	48681-87J11	.CIRCLIP	1	
18	48862-87J20	.BOLT, TANK	4	
19	47225-88L00	COLLAR, TILT CYLINDER LOWER	1	
20	48121-88L00	SHAFT, TILT CYL LOWER	1	
21	48321-89J11	SHAFT, TILT CYL UPPER	1	
22	48325-89J00	BUSH, TILT CYL UPPER	2	
23	48326-87J00	BUSH, TILT CYL LOWER	1	
24	09380-12002	SNAP RING	2	
25	09116-10179	BOLT	2	
26	55321-87J00	ANODE, PROTECTION	1	
27	09103-06281	BOLT (6X14)	1	

FIG.337K

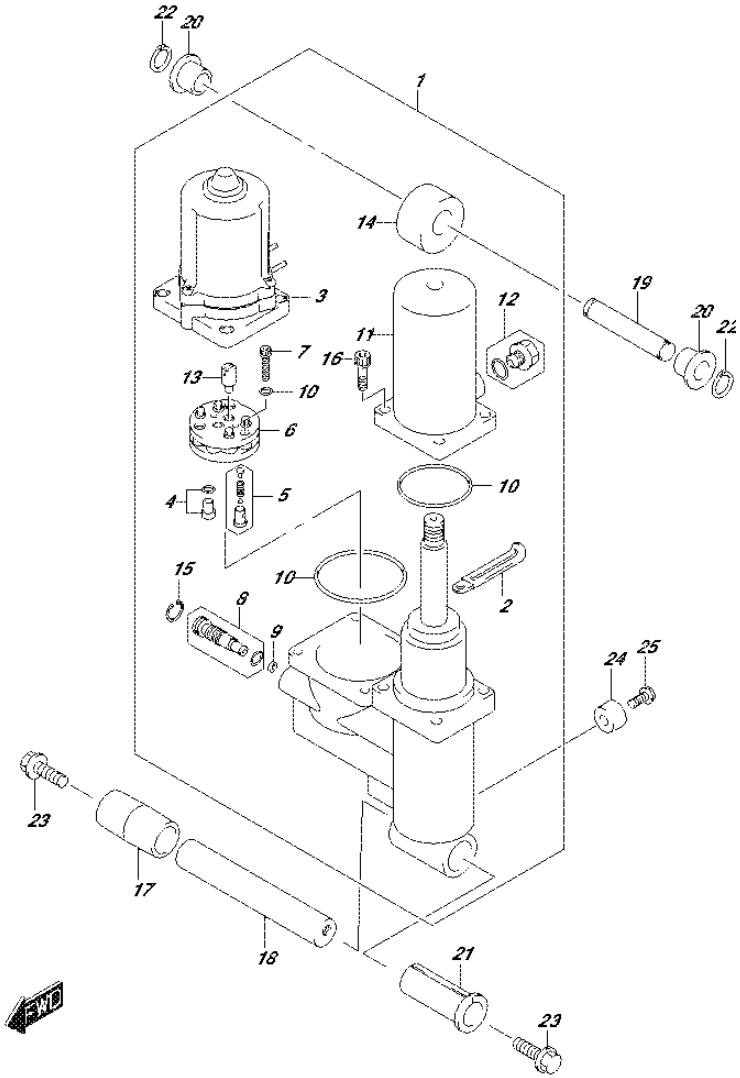

FIG.337K (3-C-9) TRIM CYLINDER (DF50AVT E01)

REF NO.	PART NO.	DESCRIPTION	Q'TY	REMARKS
1	48000-88L20	TRIM ASSY, POWER WITH TILT	1	
2	29404-93J10	.CLAMP	1	
3	38100-88L11	.MOTOR ASSY, PTT	1	
4	48320-87J10	.VALVE, UPPER PRESSURE	1	
5	48330-87J20	.VALVE, DOWN PRESSURE	1	
6	48510-97E10	.PUMP ASSY, GEAR	1	
7	48541-87J20	.BOLT	3	
8	48551-88L10	.VALVE, MANUAL	1	
9	48553-88L00	.SEAL WASHER	1	
10	48557-87J10	.O RING SET	1	
11	48571-88L00	.TANK, RESERVOIR	1	
12	48572-87L00	.PLUG	1	
13	48583-87J10	.JOINT, DRIVE	1	
14	48611-88L00	.JOINT, METAL	1	
15	48681-87J11	.CIRCLIP	1	
16	48862-87J20	.BOLT, TANK	4	
17	47225-88L00	COLLAR, TILT CYLINDER LOWER	1	
18	48121-88L10	SHAFT, TILT CYL LOWER	1	
19	48321-89J20	SHAFT, TILT CYL UPPER	1	
20	48325-89J10	BUSH, TILT CYL UPPER	2	
21	48326-87J00	BUSH, TILT CYL LOWER	1	
22	09380-12002	SNAP RING	2	
23	09116-10179	BOLT	2	
24	55321-87J00	ANODE, PROTECTION	1	
25	09103-06281	BOLT (6X14)	1	

FIG.337L

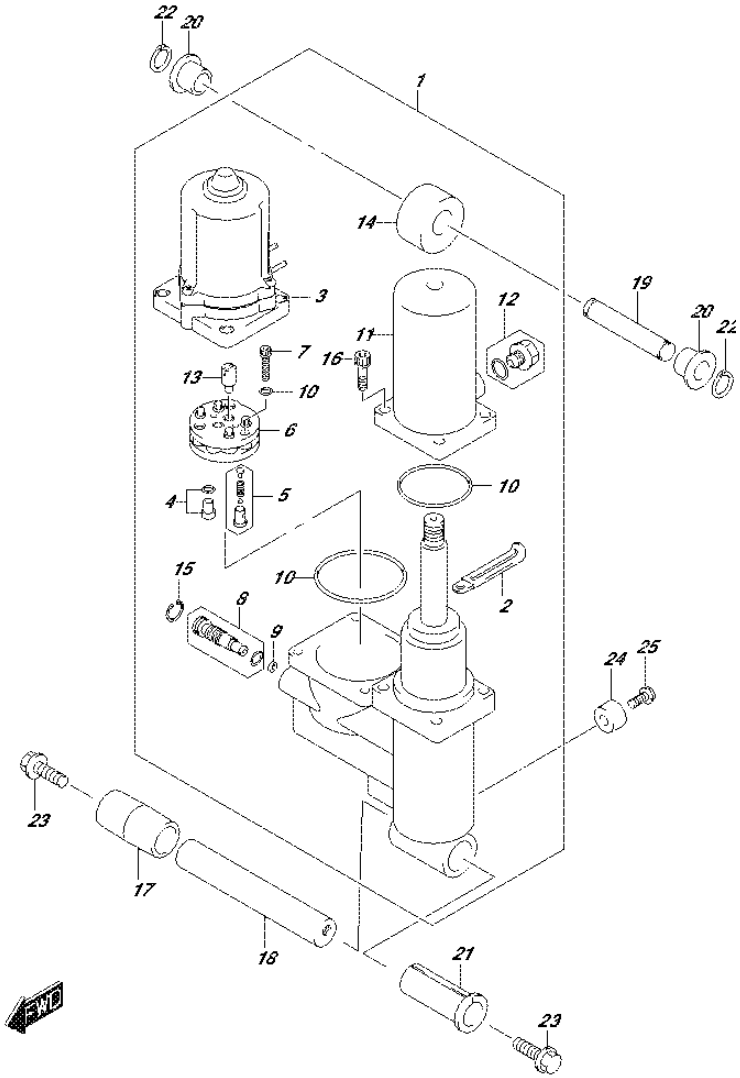

FIG.337L (3-C-10) TRIM CYLINDER (DF50AVTH E01)

REF NO.	PART NO.	DESCRIPTION	Q'TY	REMARKS
1	48000-88L20	TRIM ASSY, POWER WITH TILT	1	
2	29404-93J10	.CLAMP	1	
3	38100-88L11	.MOTOR ASSY, PTT	1	
4	48320-87J10	.VALVE, UPPER PRESSURE	1	
5	48330-87J20	.VALVE, DOWN PRESSURE	1	
6	48510-97E10	.PUMP ASSY, GEAR	1	
7	48541-87J20	.BOLT	3	
8	48551-88L10	.VALVE, MANUAL	1	
9	48553-88L00	.SEAL WASHER	1	
10	48557-87J10	.O RING SET	1	
11	48571-88L00	.TANK, RESERVOIR	1	
12	48572-87L00	.PLUG	1	
13	48583-87J10	.JOINT, DRIVE	1	
14	48611-88L00	.JOINT, METAL	1	
15	48681-87J11	.CIRCLIP	1	
16	48862-87J20	.BOLT, TANK	4	
17	47225-88L00	COLLAR, TILT CYLINDER LOWER	1	
18	48121-88L10	SHAFT, TILT CYL LOWER	1	
19	48321-89J20	SHAFT, TILT CYL UPPER	1	
20	48325-89J10	BUSH, TILT CYL UPPER	2	
21	48326-87J00	BUSH, TILT CYL LOWER	1	
22	09380-12002	SNAP RING	2	
23	09116-10179	BOLT	2	
24	55321-87J00	ANODE, PROTECTION	1	
25	09103-06281	BOLT (6X14)	1	

FIG.337M

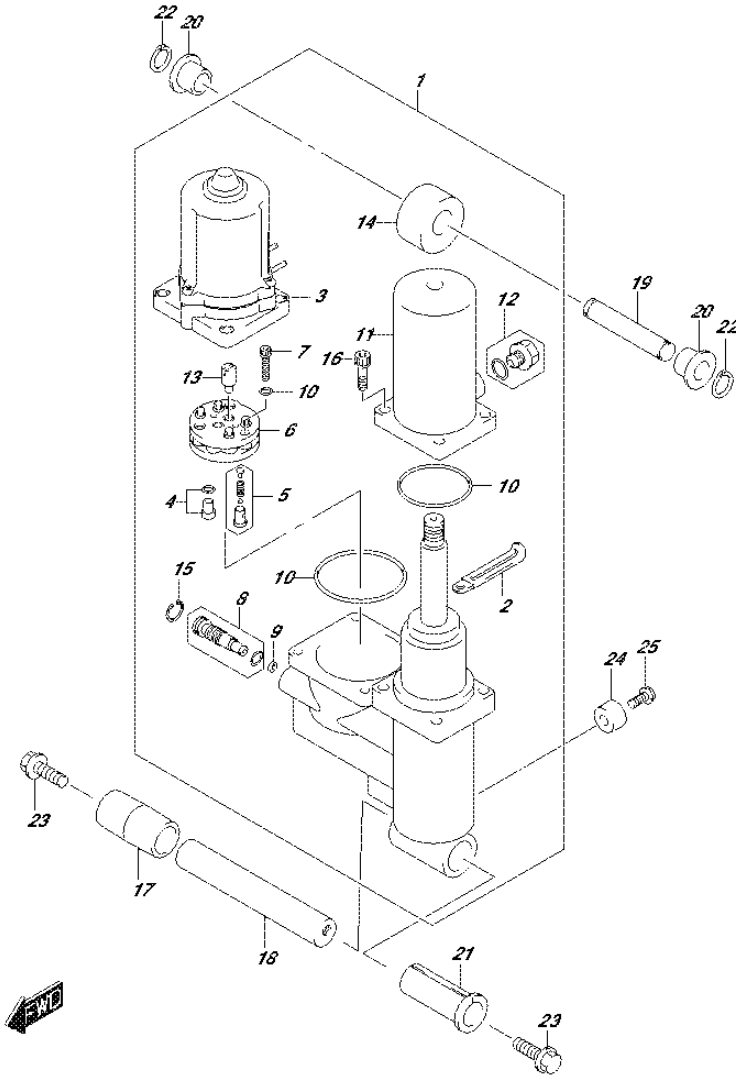

FIG.337M (3-C-11) TRIM CYLINDER (DF60AVT E01)

REF NO.	PART NO.	DESCRIPTION	Q'TY	REMARKS
1	48000-88L20	TRIM ASSY, POWER WITH TILT	1	
2	29404-93J10	.CLAMP	1	
3	38100-88L11	.MOTOR ASSY, PTT	1	
4	48320-87J10	.VALVE, UPPER PRESSURE	1	
5	48330-87J20	.VALVE, DOWN PRESSURE	1	
6	48510-97E10	.PUMP ASSY, GEAR	1	
7	48541-87J20	.BOLT	3	
8	48551-88L10	.VALVE, MANUAL	1	
9	48553-88L00	.SEAL WASHER	1	
10	48557-87J10	.O RING SET	1	
11	48571-88L00	.TANK, RESERVOIR	1	
12	48572-87L00	.PLUG	1	
13	48583-87J10	.JOINT, DRIVE	1	
14	48611-88L00	.JOINT, METAL	1	
15	48681-87J11	.CIRCLIP	1	
16	48862-87J20	.BOLT, TANK	4	
17	47225-88L00	COLLAR, TILT CYLINDER LOWER	1	
18	48121-88L10	SHAFT, TILT CYL LOWER	1	
19	48321-89J20	SHAFT, TILT CYL UPPER	1	
20	48325-89J10	BUSH, TILT CYL UPPER	2	
21	48326-87J00	BUSH, TILT CYL LOWER	1	
22	09380-12002	SNAP RING	2	
23	09116-10179	BOLT	2	
24	55321-87J00	ANODE, PROTECTION	1	
25	09103-06281	BOLT (6X14)	1	

FIG.337N

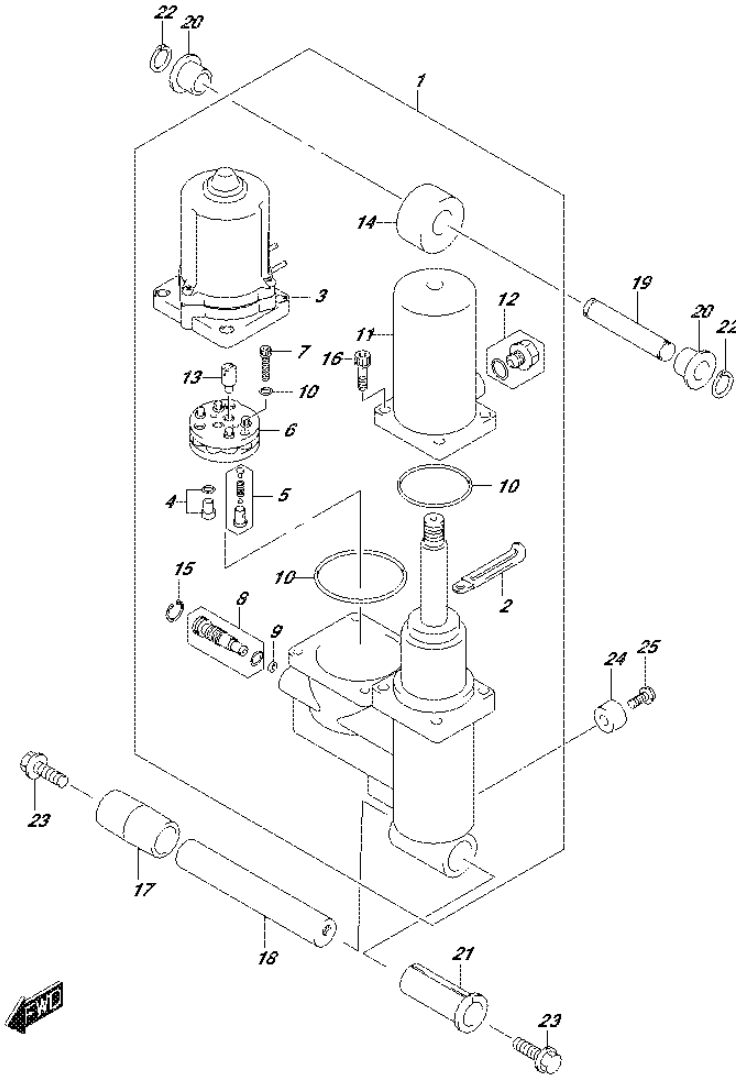

FIG.337N (3-C-12) TRIM CYLINDER (DF60AVT E40)

REF NO.	PART NO.	DESCRIPTION	Q'TY	REMARKS
1	48000-88L20	TRIM ASSY, POWER WITH TILT	1	
2	29404-93J10	.CLAMP	1	
3	38100-88L11	.MOTOR ASSY, PTT	1	
4	48320-87J10	.VALVE, UPPER PRESSURE	1	
5	48330-87J20	.VALVE, DOWN PRESSURE	1	
6	48510-97E10	.PUMP ASSY, GEAR	1	
7	48541-87J20	.BOLT	3	
8	48551-88L10	.VALVE, MANUAL	1	
9	48553-88L00	.SEAL WASHER	1	
10	48557-87J10	.O RING SET	1	
11	48571-88L00	.TANK, RESERVOIR	1	
12	48572-87L00	.PLUG	1	
13	48583-87J10	.JOINT, DRIVE	1	
14	48611-88L00	.JOINT, METAL	1	
15	48681-87J11	.CIRCLIP	1	
16	48862-87J20	.BOLT, TANK	4	
17	47225-88L00	COLLAR, TILT CYLINDER LOWER	1	
18	48121-88L10	SHAFT, TILT CYL LOWER	1	
19	48321-89J20	SHAFT, TILT CYL UPPER	1	
20	48325-89J10	BUSH, TILT CYL UPPER	2	
21	48326-87J00	BUSH, TILT CYL LOWER	1	
22	09380-12002	SNAP RING	2	
23	09116-10179	BOLT	2	
24	55321-87J00	ANODE, PROTECTION	1	
25	09103-06281	BOLT (6X14)	1	

FIG.337P

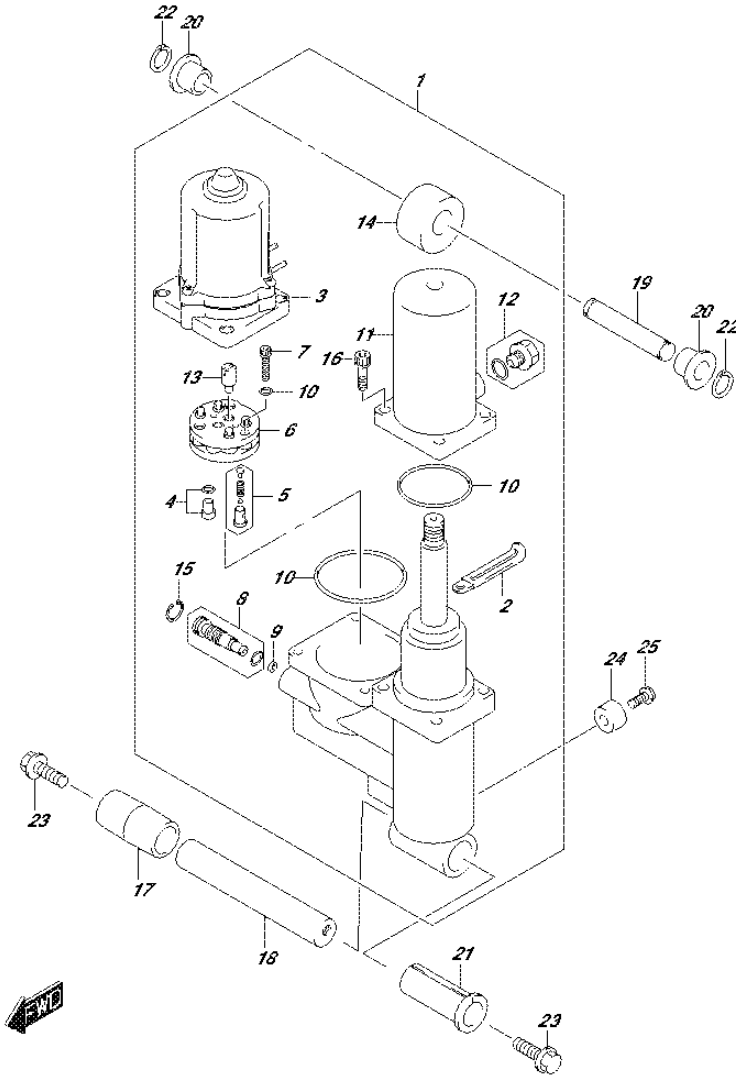

FIG.337P (3-C-13) TRIM CYLINDER (DF60AVTH E01)

REF NO.	PART NO.	DESCRIPTION	Q'TY	REMARKS
1	48000-88L20	TRIM ASSY, POWER WITH TILT	1	
2	29404-93J10	.CLAMP	1	
3	38100-88L11	.MOTOR ASSY, PTT	1	
4	48320-87J10	.VALVE, UPPER PRESSURE	1	
5	48330-87J20	.VALVE, DOWN PRESSURE	1	
6	48510-97E10	.PUMP ASSY, GEAR	1	
7	48541-87J20	.BOLT	3	
8	48551-88L10	.VALVE, MANUAL	1	
9	48553-88L00	.SEAL WASHER	1	
10	48557-87J10	.O RING SET	1	
11	48571-88L00	.TANK, RESERVOIR	1	
12	48572-87L00	.PLUG	1	
13	48583-87J10	.JOINT, DRIVE	1	
14	48611-88L00	.JOINT, METAL	1	
15	48681-87J11	.CIRCLIP	1	
16	48862-87J20	.BOLT, TANK	4	
17	47225-88L00	COLLAR, TILT CYLINDER LOWER	1	
18	48121-88L10	SHAFT, TILT CYL LOWER	1	
19	48321-89J20	SHAFT, TILT CYL UPPER	1	
20	48325-89J10	BUSH, TILT CYL UPPER	2	
21	48326-87J00	BUSH, TILT CYL LOWER	1	
22	09380-12002	SNAP RING	2	
23	09116-10179	BOLT	2	
24	55321-87J00	ANODE, PROTECTION	1	
25	09103-06281	BOLT (6X14)	1	

FIG.337R

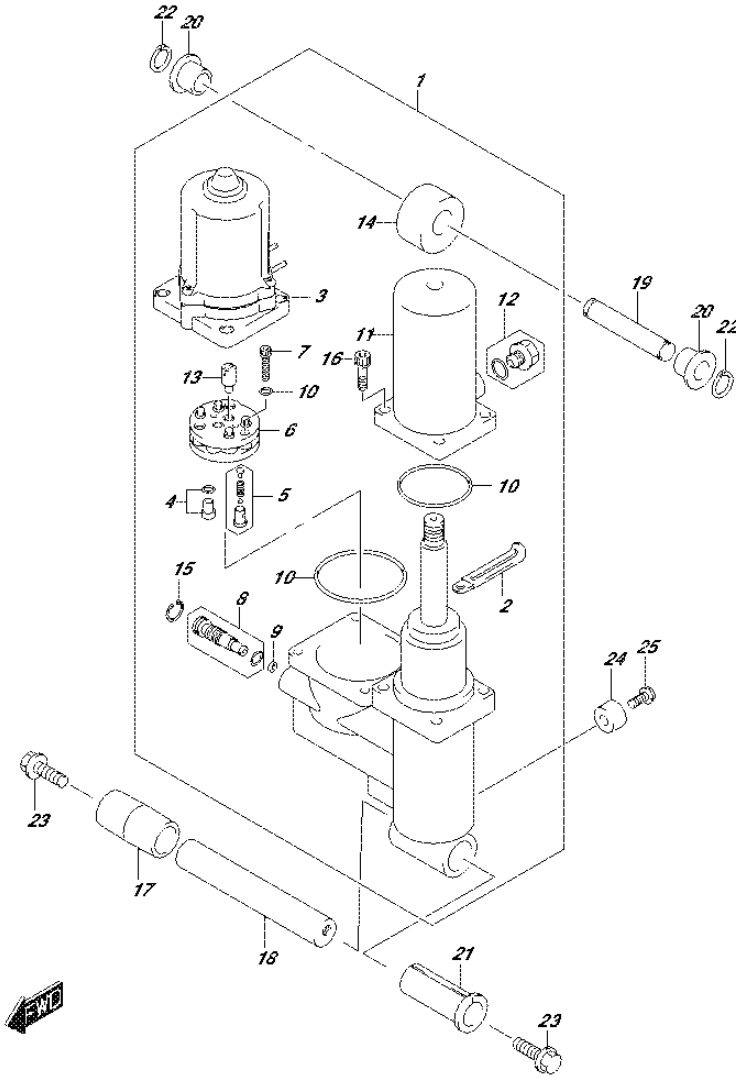

FIG.337R (3-C-14) TRIM CYLINDER (DF60AVTH E40)

REF NO.	PART NO.	DESCRIPTION	Q'TY	REMARKS
1	48000-88L20	TRIM ASSY, POWER WITH TILT	1	
2	29404-93J10	.CLAMP	1	
3	38100-88L11	.MOTOR ASSY, PTT	1	
4	48320-87J10	.VALVE, UPPER PRESSURE	1	
5	48330-87J20	.VALVE, DOWN PRESSURE	1	
6	48510-97E10	.PUMP ASSY, GEAR	1	
7	48541-87J20	.BOLT	3	
8	48551-88L10	.VALVE, MANUAL	1	
9	48553-88L00	.SEAL WASHER	1	
10	48557-87J10	.O RING SET	1	
11	48571-88L00	.TANK, RESERVOIR	1	
12	48572-87L00	.PLUG	1	
13	48583-87J10	.JOINT, DRIVE	1	
14	48611-88L00	.JOINT, METAL	1	
15	48681-87J11	.CIRCLIP	1	
16	48862-87J20	.BOLT, TANK	4	
17	47225-88L00	COLLAR, TILT CYLINDER LOWER	1	
18	48121-88L10	SHAFT, TILT CYL LOWER	1	
19	48321-89J20	SHAFT, TILT CYL UPPER	1	
20	48325-89J10	BUSH, TILT CYL UPPER	2	
21	48326-87J00	BUSH, TILT CYL LOWER	1	
22	09380-12002	SNAP RING	2	
23	09116-10179	BOLT	2	
24	55321-87J00	ANODE, PROTECTION	1	
25	09103-06281	BOLT (6X14)	1	

FIG.339A

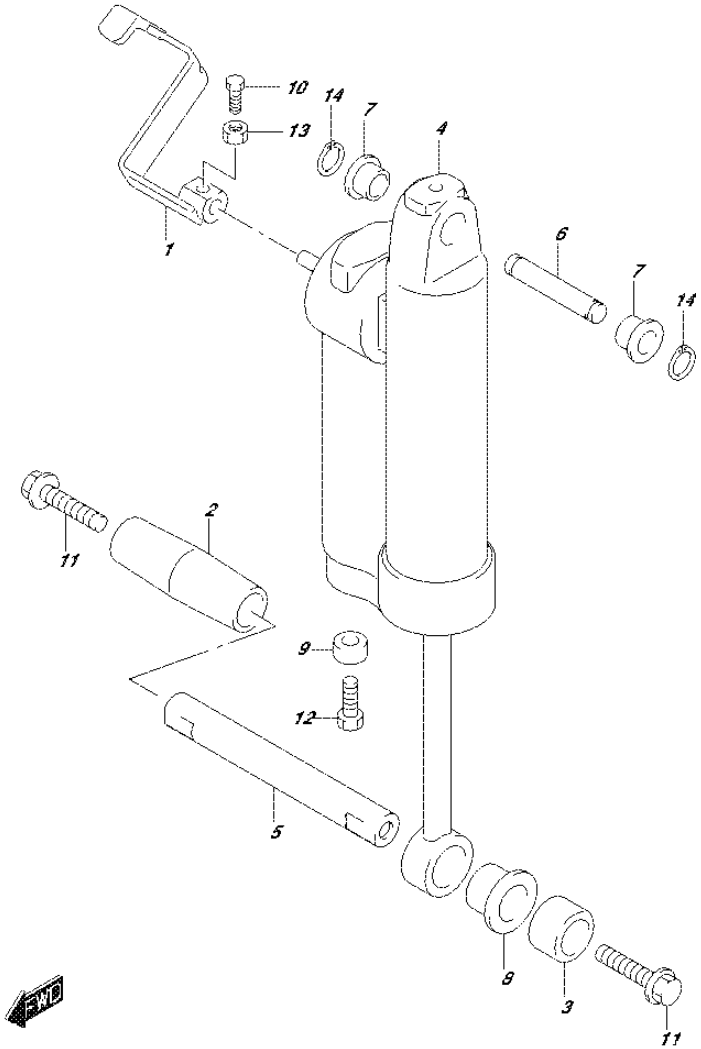

FIG.339A (3-C-15) GAS CYLINDER (DF40AQH E01)

REF NO.	PART NO.	DESCRIPTION	Q'TY	REMARKS
1	45260-89J00	LEVER, RELEASE	1	
2	47225-89J00	COLLAR, TILT CYL LOWER STBD	1	
3	47226-89J00	COLLAR, TILT CYL LOWER PORT	1	
4	47400-87J32	CYLINDER ASSY, GAS	1	
5	48121-89J10	SHAFT, TILT CYLINDER LOWER	1	
6	48321-89J11	SHAFT, TILT CYLINDER UPPER	1	
7	48325-89J00	BUSH, TILT CYLINDER UPPER	2	
8	48326-89J00	BUSH, TILT CYLINDER LOWER	1	
9	55321-87J00	ANODE, PROTECTION	1	
10	09100-06113	BOLT (6X16)	1	
11	09116-10179	BOLT	2	
12	09103-06281	BOLT (6X14)	1	
13	09140-06020	NUT	1	
14	09380-12002	SNAP RING	2	

FIG.339B

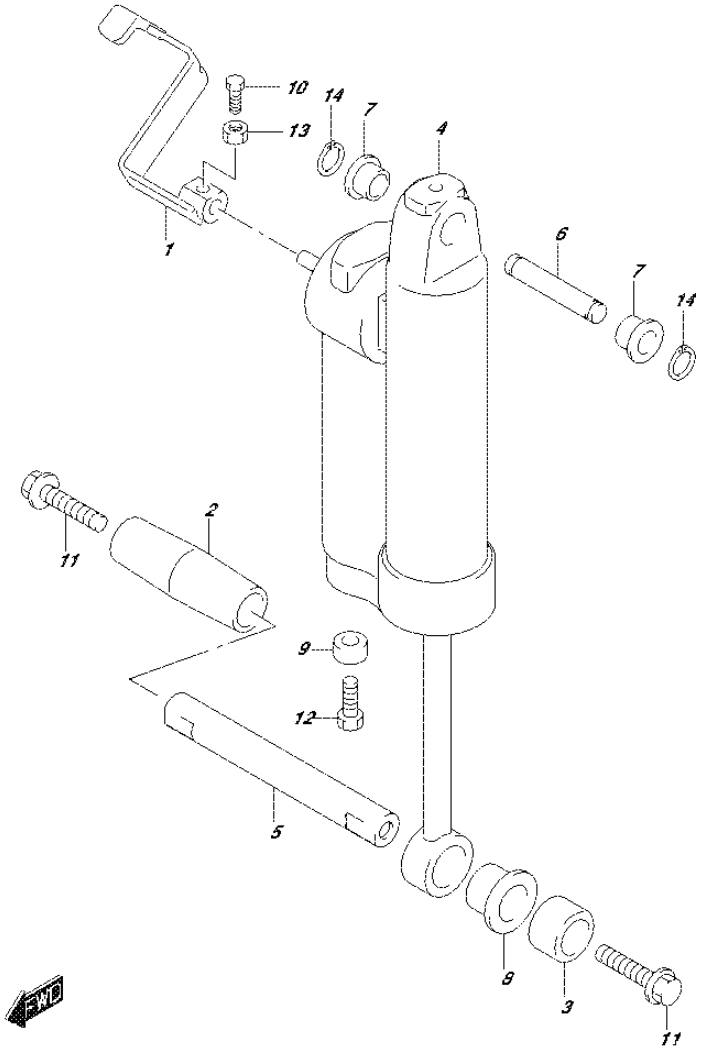

FIG.339B (3-D-2) GAS CYLINDER (DF60AQH E01)

REF NO.	PART NO.	DESCRIPTION	Q'TY	REMARKS
1	45260-89J00	LEVER, RELEASE	1	
2	47225-89J00	COLLAR, TILT CYL LOWER STBD	1	
3	47226-89J00	COLLAR, TILT CYL LOWER PORT	1	
4	47400-87J32	CYLINDER ASSY, GAS	1	
5	48121-89J10	SHAFT, TILT CYLINDER LOWER	1	
6	48321-89J11	SHAFT, TILT CYLINDER UPPER	1	
7	48325-89J00	BUSH, TILT CYLINDER UPPER	2	
8	48326-89J00	BUSH, TILT CYLINDER LOWER	1	
9	55321-87J00	ANODE, PROTECTION	1	
10	09100-06113	BOLT (6X16)	1	
11	09116-10179	BOLT	2	
12	09103-06281	BOLT (6X14)	1	
13	09140-06020	NUT	1	
14	09380-12002	SNAP RING	2	

FIG.339C

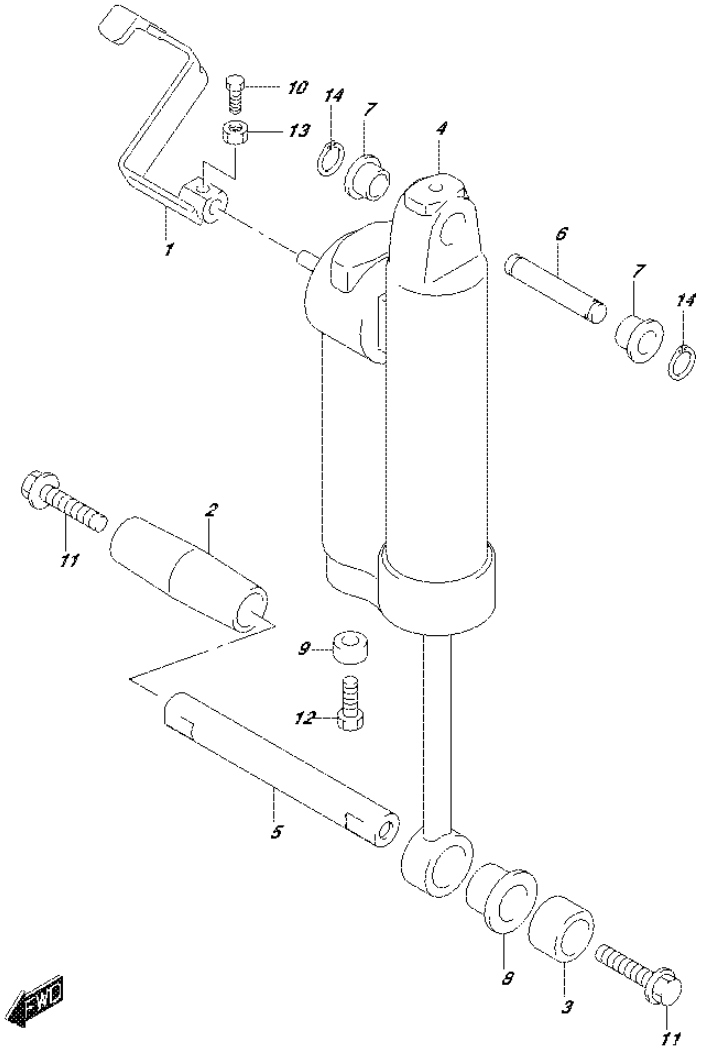

FIG.339C (3-D-3) GAS CYLINDER (DF60AQH E40)

REF NO.	PART NO.	DESCRIPTION	Q'TY	REMARKS
1	45260-89J00	LEVER, RELEASE	1	
2	47225-89J00	COLLAR, TILT CYL LOWER STBD	1	
3	47226-89J00	COLLAR, TILT CYL LOWER PORT	1	
4	47400-87J32	CYLINDER ASSY, GAS	1	
5	48121-89J10	SHAFT, TILT CYLINDER LOWER	1	
6	48321-89J11	SHAFT, TILT CYLINDER UPPER	1	
7	48325-89J00	BUSH, TILT CYLINDER UPPER	2	
8	48326-89J00	BUSH, TILT CYLINDER LOWER	1	
9	55321-87J00	ANODE, PROTECTION	1	
10	09100-06113	BOLT (6X16)	1	
11	09116-10179	BOLT	2	
12	09103-06281	BOLT (6X14)	1	
13	09140-06020	NUT	1	
14	09380-12002	SNAP RING	2	

FIG.340A

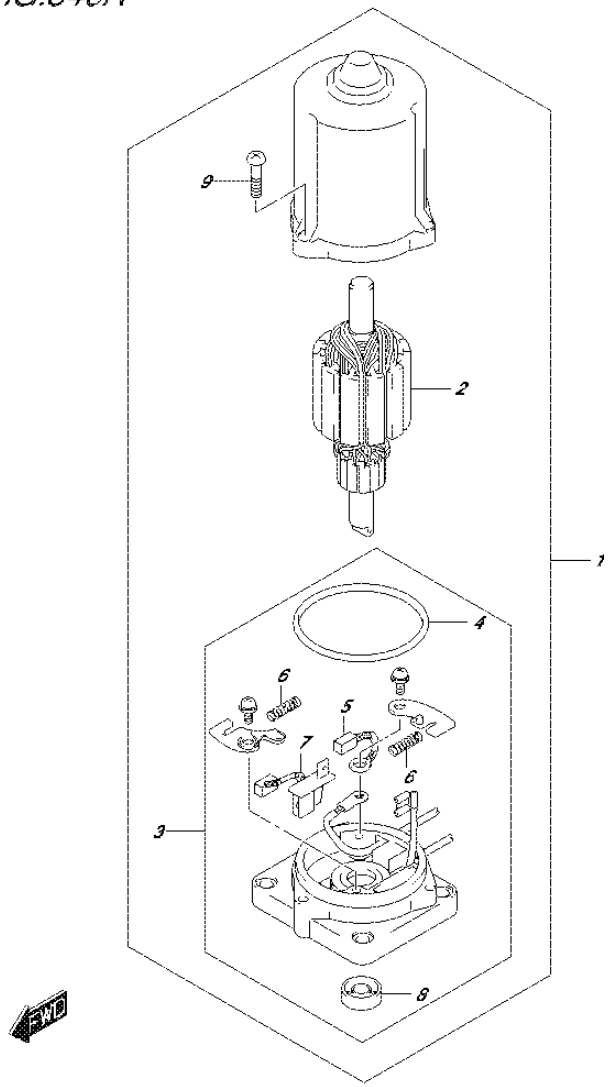

FIG.340A (3-D-4) PTT MOTOR (DF40A E01)

REF NO.	PART NO.	DESCRIPTION	Q'TY	REMARKS
1	38100-88L11	MOTOR ASSY, PTT	1	
2	31311-87J10	.ARMATURE	1	
3	31173-88L11	.HOLDER ASSY, BRUSH	1	
4	31123-97E10	..O RING	1	
5	31133-94900	..BRUSH	1	
6	31135-94900	..SPRING	2	
7	31136-87J10	..BREAKER ASSY	1	
8	33799-97E00	..SEAL, OIL	1	
9	31111-87J10	.SCREW	3	

DF60A_E01_016_340A
PTT MOTOR

FIG.340B

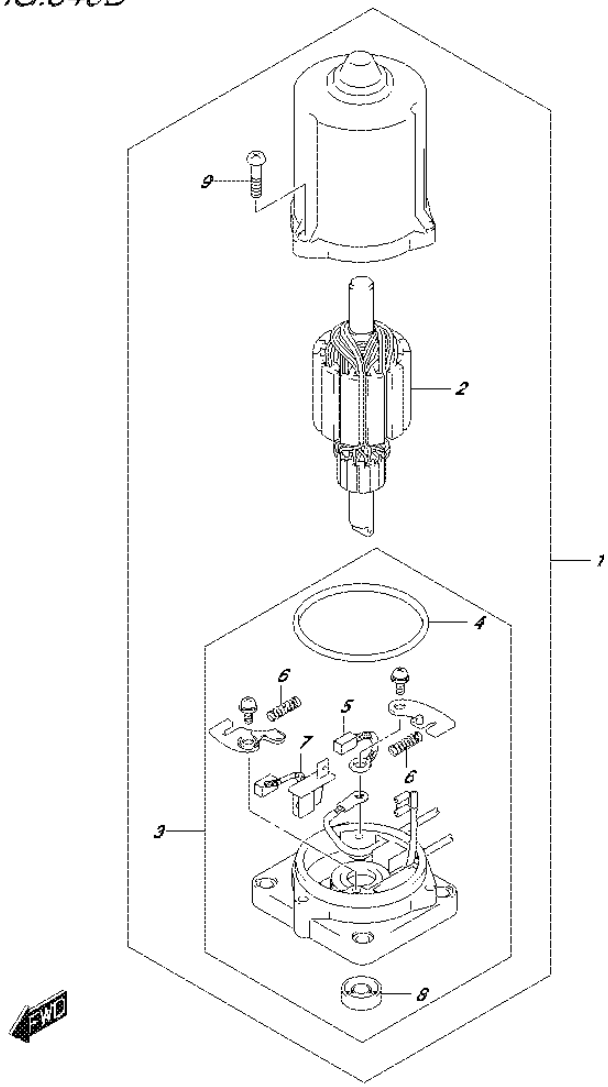

FIG.340B (3-D-5) PTT MOTOR (DF40ATH E01)

REF NO.	PART NO.	DESCRIPTION	Q'TY	REMARKS
1	38100-88L11	MOTOR ASSY, PTT	1	
2	31311-87J10	.ARMATURE	1	
3	31173-88L11	.HOLDER ASSY, BRUSH	1	
4	31123-97E10	..O RING	1	
5	31133-94900	..BRUSH	1	
6	31135-94900	..SPRING	2	
7	31136-87J10	..BREAKER ASSY	1	
8	33799-97E00	..SEAL, OIL	1	
9	31111-87J10	.SCREW	3	

FIG.340C

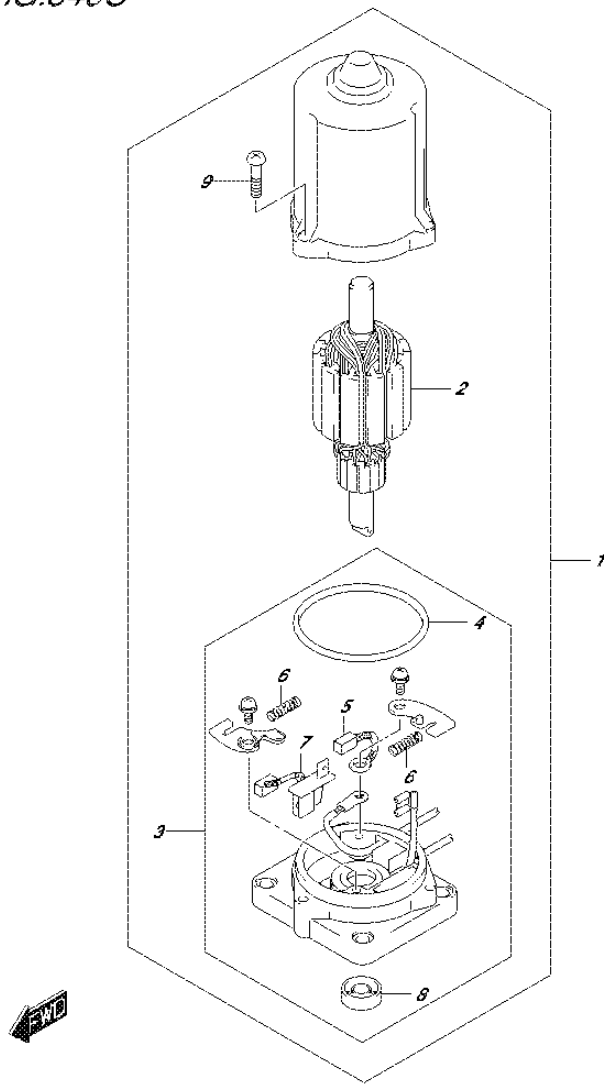

FIG.340C (3-D-6) PTT MOTOR (DF40AST E34)

REF NO.	PART NO.	DESCRIPTION	Q'TY	REMARKS
1	38100-88L11	MOTOR ASSY, PTT	1	
2	31311-87J10	.ARMATURE	1	
3	31173-88L11	.HOLDER ASSY, BRUSH	1	
4	31123-97E10	..O RING	1	
5	31133-94900	..BRUSH	1	
6	31135-94900	..SPRING	2	
7	31136-87J10	..BREAKER ASSY	1	
8	33799-97E00	..SEAL, OIL	1	
9	31111-87J10	.SCREW	3	

DF60A_E01_016_340C
PTT MOTOR

FIG.340D

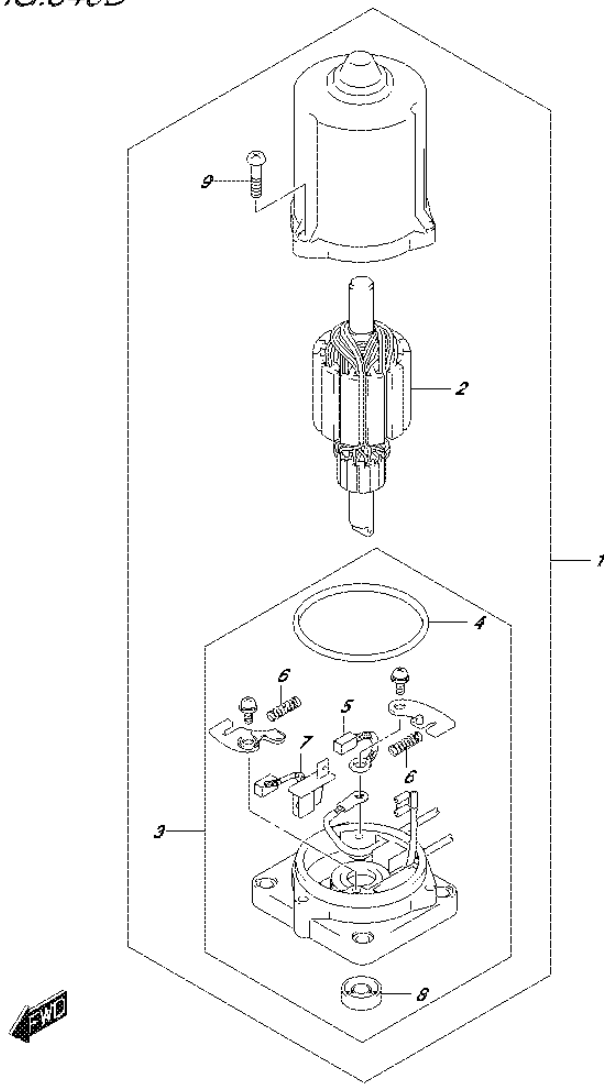

FIG.340D (3-D-7) PTT MOTOR (DF50A E01)

REF NO.	PART NO.	DESCRIPTION	Q'TY	REMARKS
1	38100-88L11	MOTOR ASSY, PTT	1	
2	31311-87J10	.ARMATURE	1	
3	31173-88L11	.HOLDER ASSY, BRUSH	1	
4	31123-97E10	..O RING	1	
5	31133-94900	..BRUSH	1	
6	31135-94900	..SPRING	2	
7	31136-87J10	..BREAKER ASSY	1	
8	33799-97E00	..SEAL, OIL	1	
9	31111-87J10	.SCREW	3	

FIG.340E

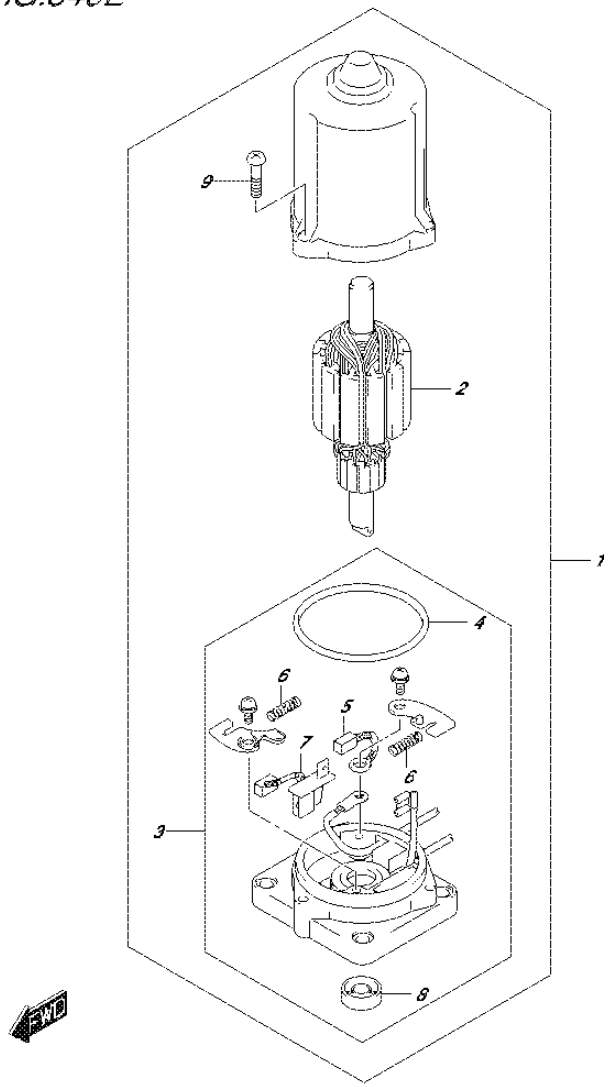

FIG.340E (3-D-8) PTT MOTOR (DF50ATH E01)

REF NO.	PART NO.	DESCRIPTION	Q'TY	REMARKS
1	38100-88L11	MOTOR ASSY, PTT	1	
2	31311-87J10	.ARMATURE	1	
3	31173-88L11	.HOLDER ASSY, BRUSH	1	
4	31123-97E10	..O RING	1	
5	31133-94900	..BRUSH	1	
6	31135-94900	..SPRING	2	
7	31136-87J10	..BREAKER ASSY	1	
8	33799-97E00	..SEAL, OIL	1	
9	31111-87J10	.SCREW	3	

FIG.340F

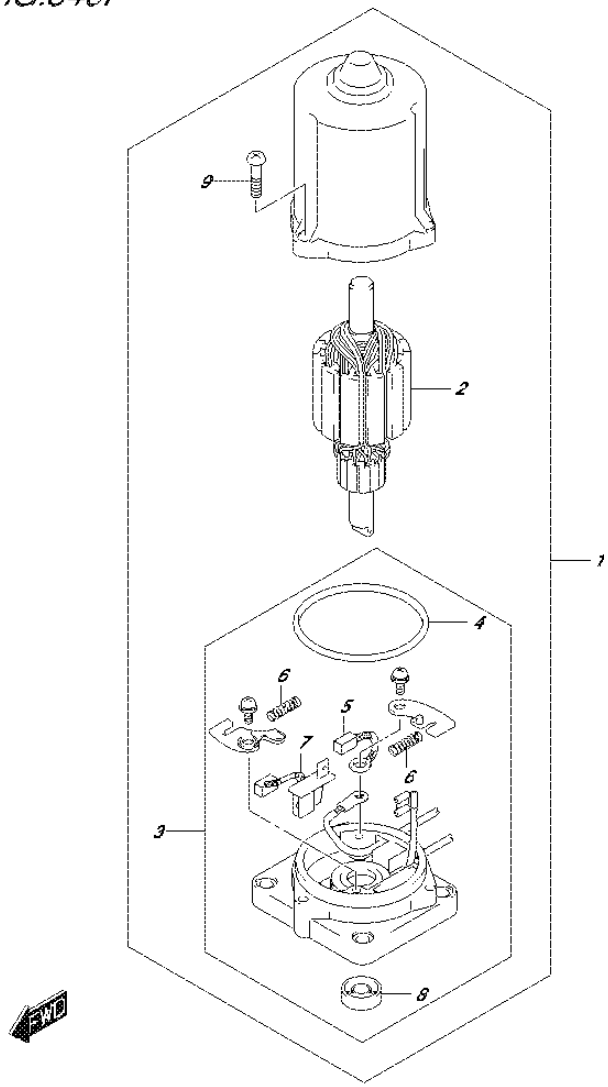

FIG.340F (3-D-9) PTT MOTOR (DF60A E01)

REF NO.	PART NO.	DESCRIPTION	Q'TY	REMARKS
1	38100-88L11	MOTOR ASSY, PTT	1	
2	31311-87J10	.ARMATURE	1	
3	31173-88L11	.HOLDER ASSY, BRUSH	1	
4	31123-97E10	..O RING	1	
5	31133-94900	..BRUSH	1	
6	31135-94900	..SPRING	2	
7	31136-87J10	..BREAKER ASSY	1	
8	33799-97E00	..SEAL, OIL	1	
9	31111-87J10	.SCREW	3	

FIG.340G

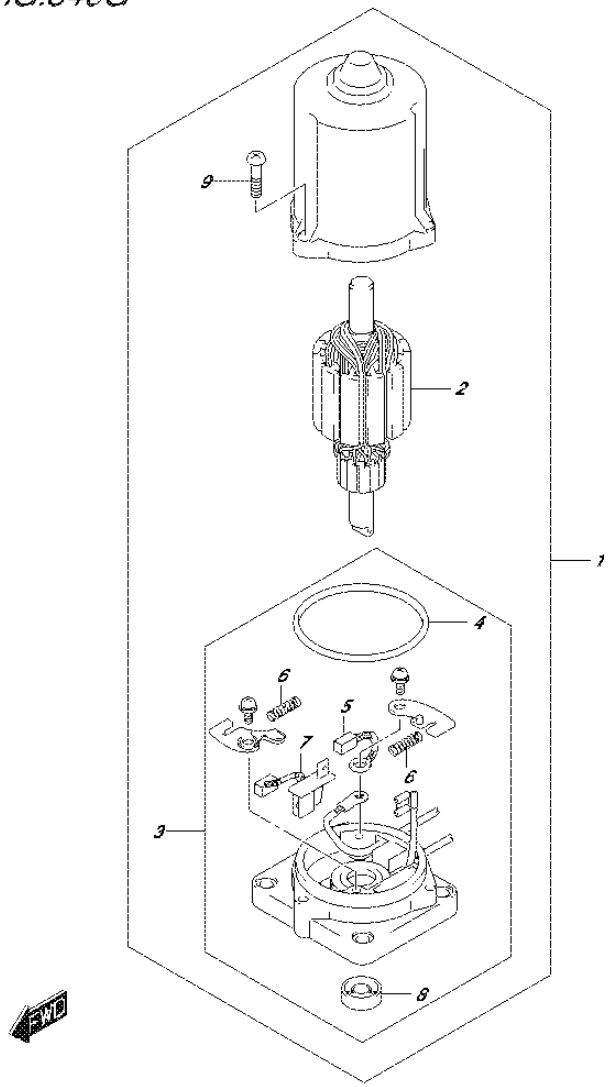

FIG.340G (3-D-10) PTT MOTOR (DF60A E40)

REF NO.	PART NO.	DESCRIPTION	Q'TY	REMARKS
1	38100-88L11	MOTOR ASSY, PTT	1	
2	31311-87J10	.ARMATURE	1	
3	31173-88L11	.HOLDER ASSY, BRUSH	1	
4	31123-97E10	..O RING	1	
5	31133-94900	..BRUSH	1	
6	31135-94900	..SPRING	2	
7	31136-87J10	..BREAKER ASSY	1	
8	33799-97E00	..SEAL, OIL	1	
9	31111-87J10	.SCREW	3	

FIG.340H

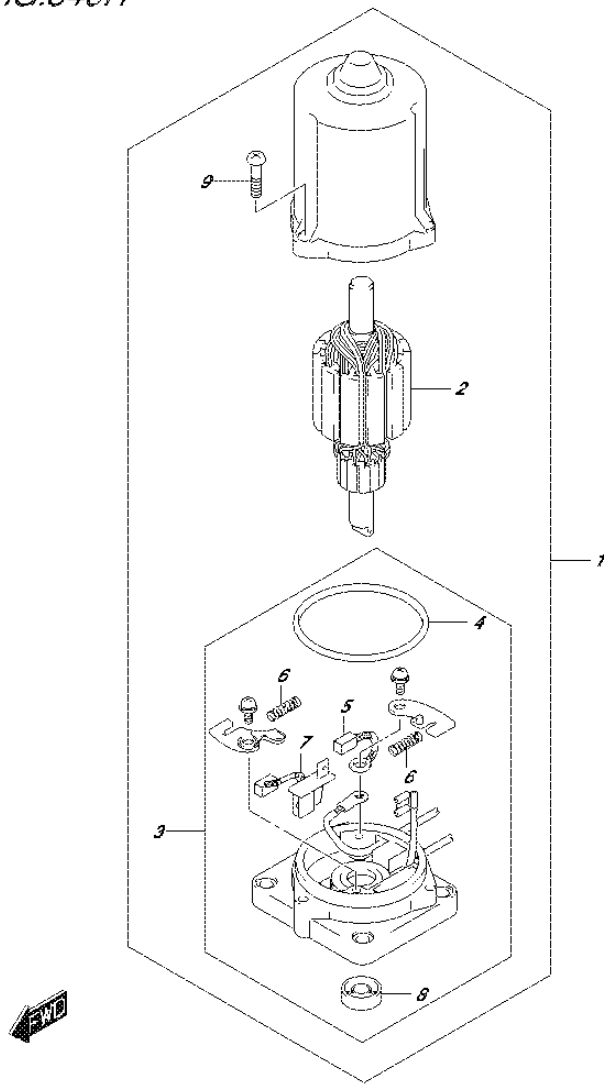

FIG.340H (3-D-11) PTT MOTOR (DF60ATH E01)

REF NO.	PART NO.	DESCRIPTION	Q'TY	REMARKS
1	38100-88L11	MOTOR ASSY, PTT	1	
2	31311-87J10	.ARMATURE	1	
3	31173-88L11	.HOLDER ASSY, BRUSH	1	
4	31123-97E10	..O RING	1	
5	31133-94900	..BRUSH	1	
6	31135-94900	..SPRING	2	
7	31136-87J10	..BREAKER ASSY	1	
8	33799-97E00	..SEAL, OIL	1	
9	31111-87J10	.SCREW	3	

FIG.340J

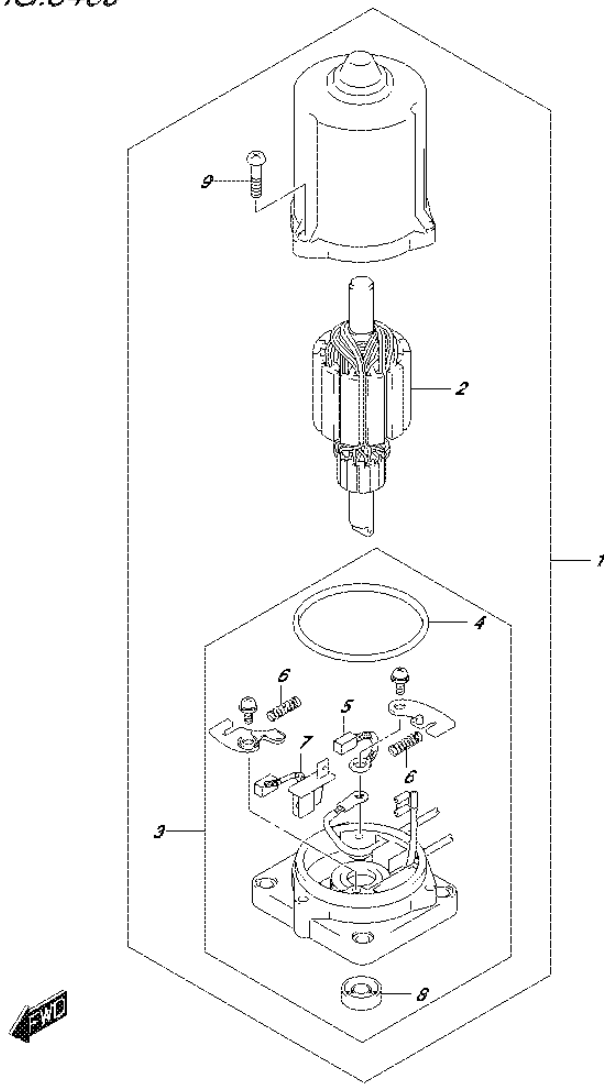

FIG.340J (3-D-12) PTT MOTOR (DF60ATH E40)

REF NO.	PART NO.	DESCRIPTION	Q'TY	REMARKS
1	38100-88L11	MOTOR ASSY, PTT	1	
2	31311-87J10	.ARMATURE	1	
3	31173-88L11	.HOLDER ASSY, BRUSH	1	
4	31123-97E10	..O RING	1	
5	31133-94900	..BRUSH	1	
6	31135-94900	..SPRING	2	
7	31136-87J10	..BREAKER ASSY	1	
8	33799-97E00	..SEAL, OIL	1	
9	31111-87J10	.SCREW	3	

FIG.340K

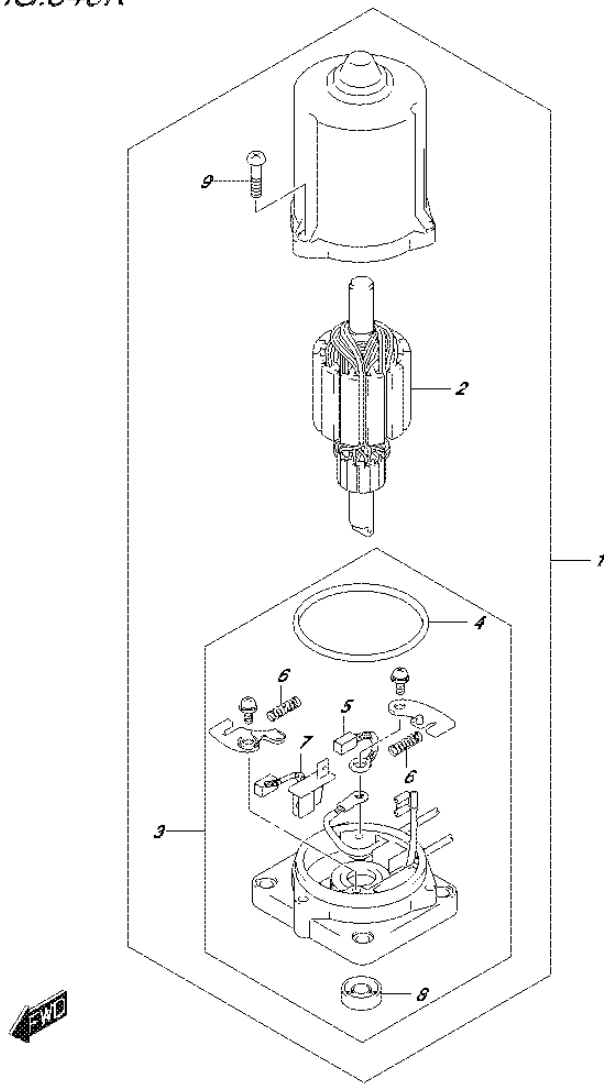

FIG.340K (3-D-13) PTT MOTOR (DF50AVT E01)

REF NO.	PART NO.	DESCRIPTION	Q'TY	REMARKS
1	38100-88L11	MOTOR ASSY, PTT	1	
2	31311-87J10	.ARMATURE	1	
3	31173-88L11	.HOLDER ASSY, BRUSH	1	
4	31123-97E10	..O RING	1	
5	31133-94900	..BRUSH	1	
6	31135-94900	..SPRING	2	
7	31136-87J10	..BREAKER ASSY	1	
8	33799-97E00	..SEAL, OIL	1	
9	31111-87J10	.SCREW	3	

DF60A_E01_016_340K
PTT MOTOR

FIG.340L

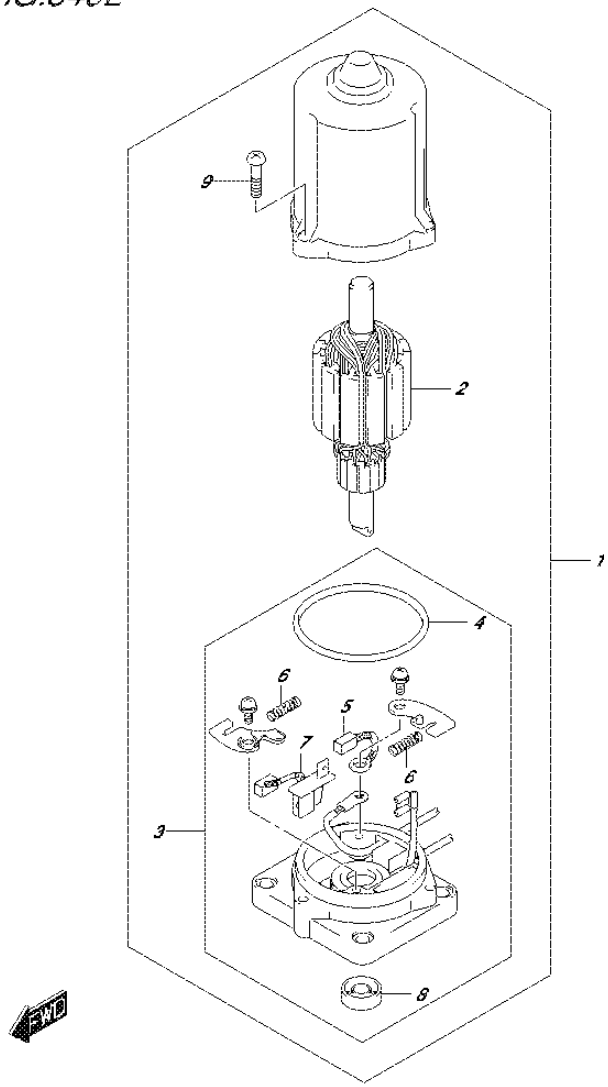

FIG.340L (3-D-14) PTT MOTOR (DF50AVTH E01)

REF NO.	PART NO.	DESCRIPTION	Q'TY	REMARKS
1	38100-88L11	MOTOR ASSY, PTT	1	
2	31311-87J10	.ARMATURE	1	
3	31173-88L11	.HOLDER ASSY, BRUSH	1	
4	31123-97E10	..O RING	1	
5	31133-94900	..BRUSH	1	
6	31135-94900	..SPRING	2	
7	31136-87J10	..BREAKER ASSY	1	
8	33799-97E00	..SEAL, OIL	1	
9	31111-87J10	.SCREW	3	

FIG.340M

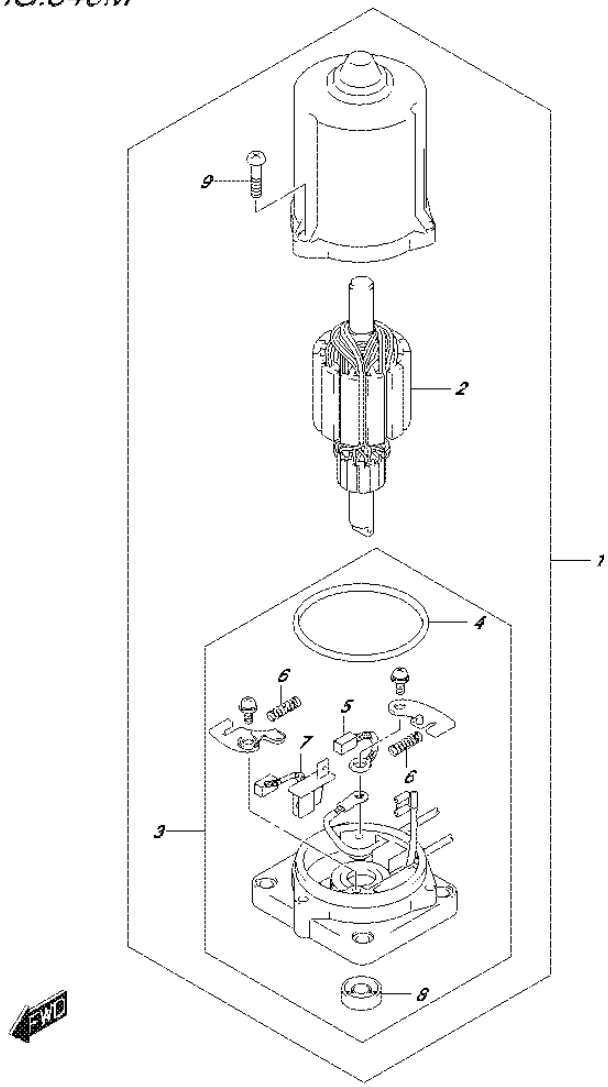

FIG.340M (3-D-15) PTT MOTOR (DF60AVT E01)

REF NO.	PART NO.	DESCRIPTION	Q'TY	REMARKS
1	38100-88L11	MOTOR ASSY, PTT	1	
2	31311-87J10	.ARMATURE	1	
3	31173-88L11	.HOLDER ASSY, BRUSH	1	
4	31123-97E10	..O RING	1	
5	31133-94900	..BRUSH	1	
6	31135-94900	..SPRING	2	
7	31136-87J10	..BREAKER ASSY	1	
8	33799-97E00	..SEAL, OIL	1	
9	31111-87J10	.SCREW	3	

FIG.340N

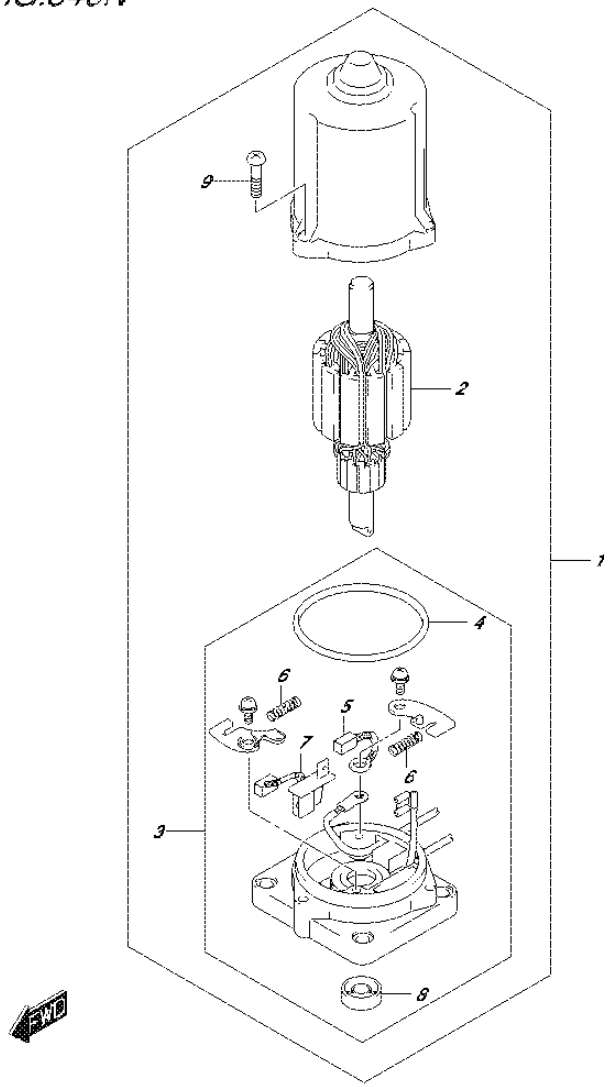

FIG.340N (3-E-2) PTT MOTOR (DF60AVT E40)

REF NO.	PART NO.	DESCRIPTION	Q'TY	REMARKS
1	38100-88L11	MOTOR ASSY, PTT	1	
2	31311-87J10	.ARMATURE	1	
3	31173-88L11	.HOLDER ASSY, BRUSH	1	
4	31123-97E10	..O RING	1	
5	31133-94900	..BRUSH	1	
6	31135-94900	..SPRING	2	
7	31136-87J10	..BREAKER ASSY	1	
8	33799-97E00	..SEAL, OIL	1	
9	31111-87J10	.SCREW	3	

FIG.340P

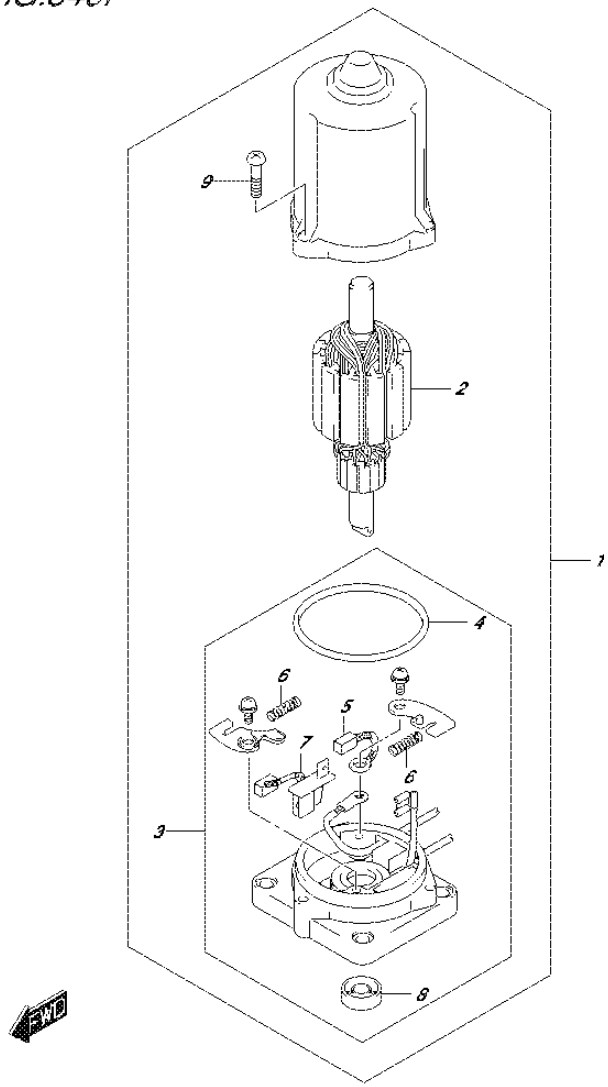

FIG.340P (3-E-3) PTT MOTOR (DF60AVTH E01)

REF NO.	PART NO.	DESCRIPTION	Q'TY	REMARKS
1	38100-88L11	MOTOR ASSY, PTT	1	
2	31311-87J10	.ARMATURE	1	
3	31173-88L11	.HOLDER ASSY, BRUSH	1	
4	31123-97E10	..O RING	1	
5	31133-94900	..BRUSH	1	
6	31135-94900	..SPRING	2	
7	31136-87J10	..BREAKER ASSY	1	
8	33799-97E00	..SEAL, OIL	1	
9	31111-87J10	.SCREW	3	

FIG.340R

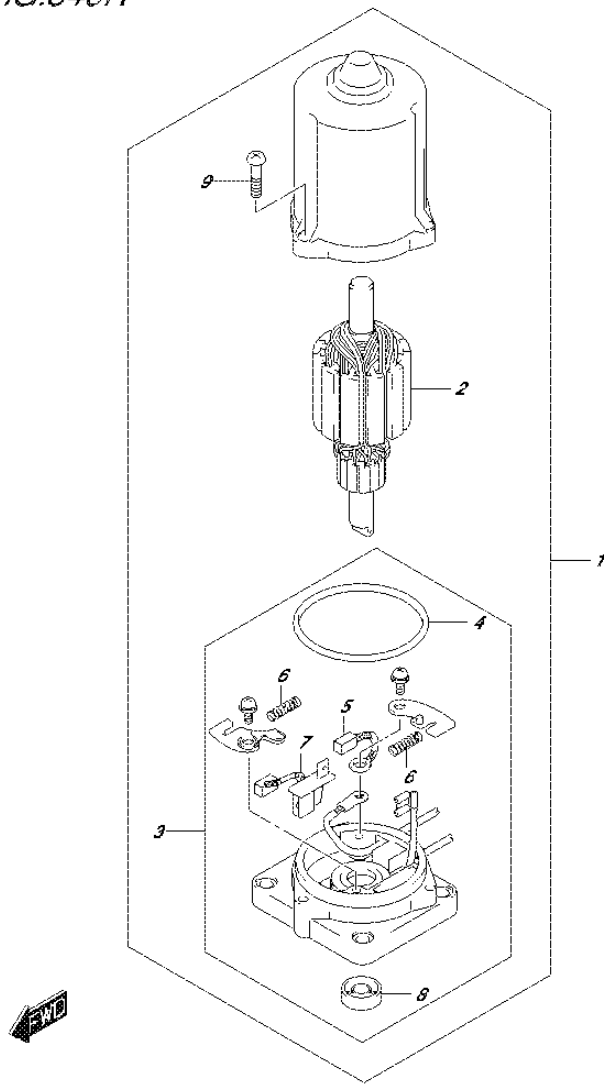

FIG.340R (3-E-4) PTT MOTOR (DF60AVTH E40)

REF NO.	PART NO.	DESCRIPTION	Q'TY	REMARKS
1	38100-88L11	MOTOR ASSY, PTT	1	
2	31311-87J10	.ARMATURE	1	
3	31173-88L11	.HOLDER ASSY, BRUSH	1	
4	31123-97E10	..O RING	1	
5	31133-94900	..BRUSH	1	
6	31135-94900	..SPRING	2	
7	31136-87J10	..BREAKER ASSY	1	
8	33799-97E00	..SEAL, OIL	1	
9	31111-87J10	.SCREW	3	

FIG.401A

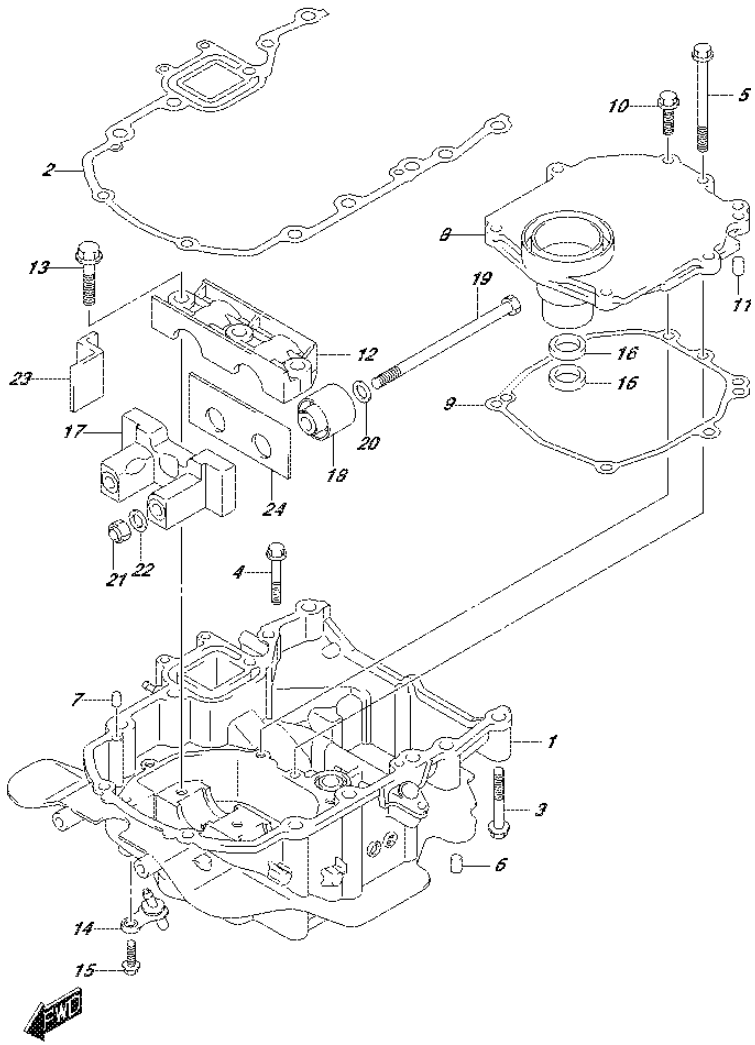

FIG.401A (3-E-5) ENGINE HOLDER (DF40A E01)

REF NO.	PART NO.	DESCRIPTION	Q'TY	REMARKS
1-1	51110-88L10-0EP	HOLDER, ENGINE (BLACK)	1	
1-2	51110-88L10-Y5S	HOLDER, ENGINE (WHITE)	1	
2	51211-88L00	GASKET, ENGINE HOLDER	1	
3	09116-08159	BOLT (8X55)	8	
4	01550-0845A	BOLT	1	
5	01550-0885A	BOLT	1	
6	09202-08006	PIN (8X12)	2	
7	09202-08006	PIN (8X12)	2	
8	51122-88L00	COVER, MOUNT CASE	1	
9	51123-88L00	GASKET, MOUNT CASE COVER	1	
10	01550-0825A	BOLT	6	
11	09202-08006	PIN (8X12)	2	
12	54137-88L00	COVER, UPPER MOUNT	1	
13	09116-10176	BOLT (10X44)	3	
14	51170-88L00	BRACKET, WATER INDICATOR	1	
15	29116-93J00	BOLT, WATER INDICATOR UNION	1	
16	09282-17011	OIL SEAL (16.5X28X6)	2	
17	54124-88L20	BRACKET, UPPER THRUST	1	
18	54130-88L00	MOUNT, UPPER	2	
19	54166-95J02	BOLT, UPPER MOUNT	2	
20	54114-90J01	WASHER, UPPER MOUNT BOLT (12.5X22X3)	2	
21	09159-12014	NUT	2	
22	54114-90J01	WASHER, UPPER THRUST MOUNT NUT (12.5X22X3)	2	
23	54121-88L00	MOUNT, UPPER THRUST FR	2	
24	54123-88L00	MOUNT, UPPER THRUST RR	1	

FIG.401B

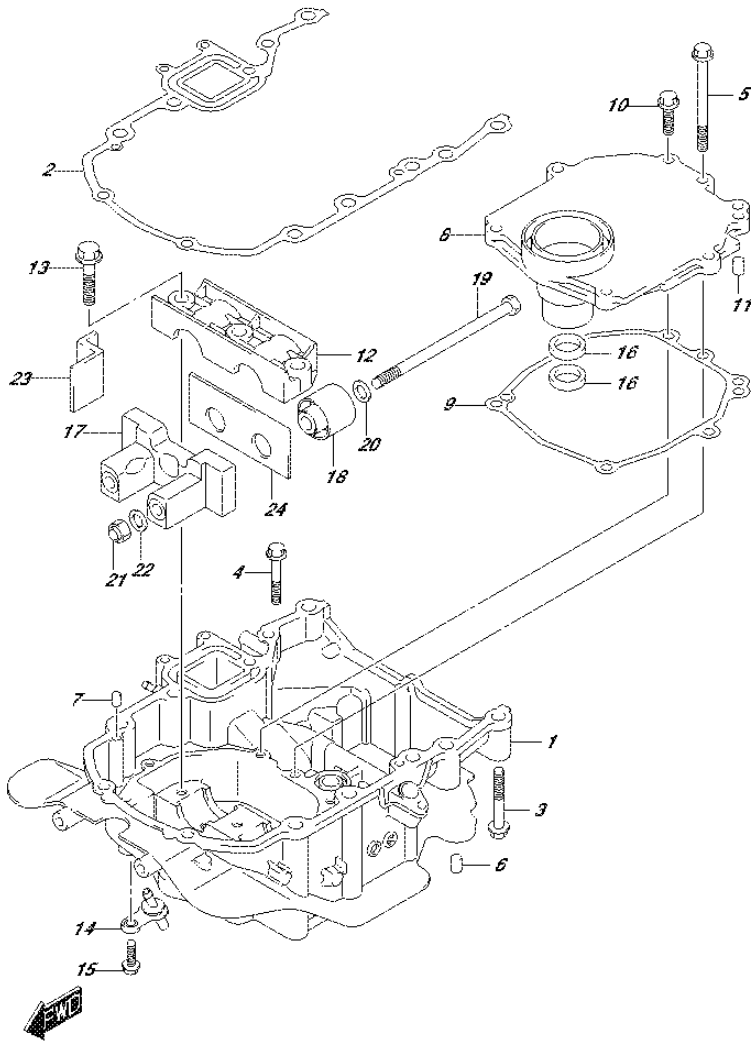

FIG.401B (3-E-6) ENGINE HOLDER (DF40AQH E01)

REF NO.	PART NO.	DESCRIPTION	Q'TY	REMARKS
1	51110-88L10-0EP	HOLDER, ENGINE (BLACK)	1	
2	51211-88L00	GASKET, ENGINE HOLDER	1	
3	09116-08159	BOLT (8X55)	8	
4	01550-0845A	BOLT	1	
5	01550-0885A	BOLT	1	
6	09202-08006	PIN (8X12)	2	
7	09202-08006	PIN (8X12)	2	
8	51122-88L00	COVER, MOUNT CASE	1	
9	51123-88L00	GASKET, MOUNT CASE COVER	1	
10	01550-0825A	BOLT	6	
11	09202-08006	PIN (8X12)	2	
12	54137-88L00	COVER, UPPER MOUNT	1	
13	09116-10176	BOLT (10X44)	3	
14	51170-88L00	BRACKET, WATER INDICATOR	1	
15	29116-93J00	BOLT, WATER INDICATOR UNION	1	
16	09282-17011	OIL SEAL (16.5X28X6)	2	
17	54124-88L20	BRACKET, UPPER THRUST	1	
18	54130-88L00	MOUNT, UPPER	2	
19	54166-95J02	BOLT, UPPER MOUNT	2	
20	54114-90J01	WASHER, UPPER MOUNT BOLT (12.5X22X3)	2	
21	09159-12014	NUT	2	
22	54114-90J01	WASHER, UPPER THRUST MOUNT NUT (12.5X22X3)	2	
23	54121-88L00	MOUNT, UPPER THRUST FR	2	
24	54123-88L00	MOUNT, UPPER THRUST RR	1	

FIG.401C

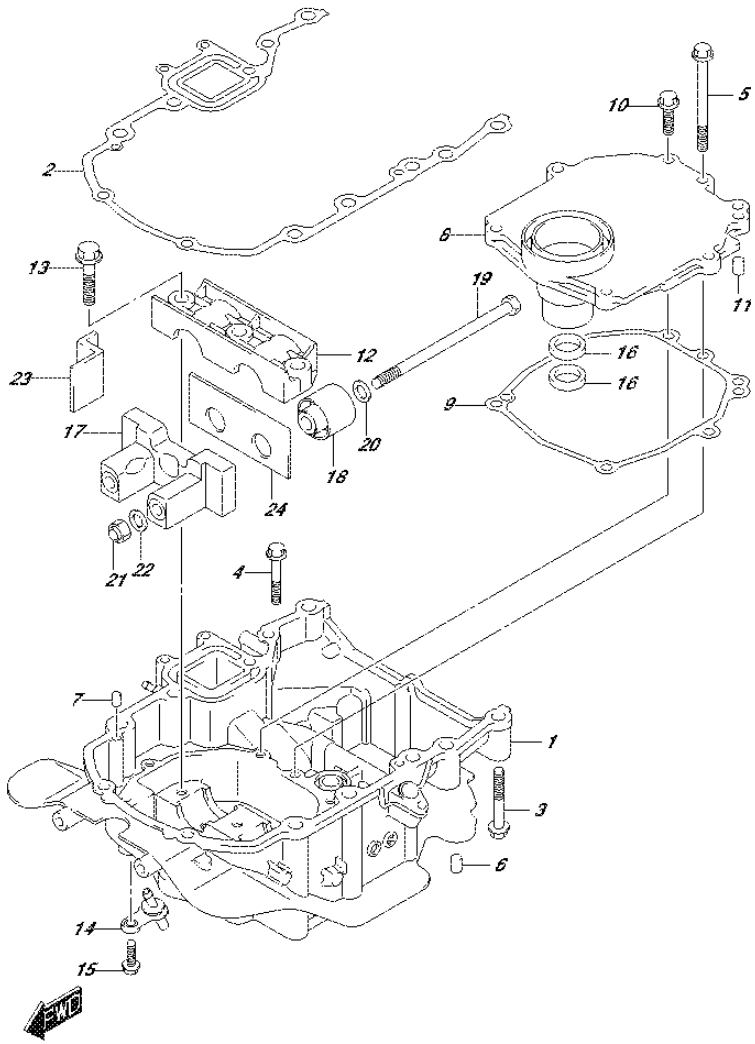

FIG.401C (3-E-7) ENGINE HOLDER (DF40ATH E01)

REF NO.	PART NO.	DESCRIPTION	Q'TY	REMARKS
1	51110-88L10-0EP	HOLDER, ENGINE (BLACK)	1	
2	51211-88L00	GASKET, ENGINE HOLDER	1	
3	09116-08159	BOLT (8X55)	8	
4	01550-0845A	BOLT	1	
5	01550-0885A	BOLT	1	
6	09202-08006	PIN (8X12)	2	
7	09202-08006	PIN (8X12)	2	
8	51122-88L00	COVER, MOUNT CASE	1	
9	51123-88L00	GASKET, MOUNT CASE COVER	1	
10	01550-0825A	BOLT	6	
11	09202-08006	PIN (8X12)	2	
12	54137-88L00	COVER, UPPER MOUNT	1	
13	09116-10176	BOLT (10X44)	3	
14	51170-88L00	BRACKET, WATER INDICATOR	1	
15	29116-93J00	BOLT, WATER INDICATOR UNION	1	
16	09282-17011	OIL SEAL (16.5X28X6)	2	
17	54124-88L20	BRACKET, UPPER THRUST	1	
18	54130-88L00	MOUNT, UPPER	2	
19	54166-95J02	BOLT, UPPER MOUNT	2	
20	54114-90J01	WASHER, UPPER MOUNT BOLT (12.5X22X3)	2	
21	09159-12014	NUT	2	
22	54114-90J01	WASHER, UPPER THRUST MOUNT NUT (12.5X22X3)	2	
23	54121-88L00	MOUNT, UPPER THRUST FR	2	
24	54123-88L00	MOUNT, UPPER THRUST RR	1	

FIG.401D

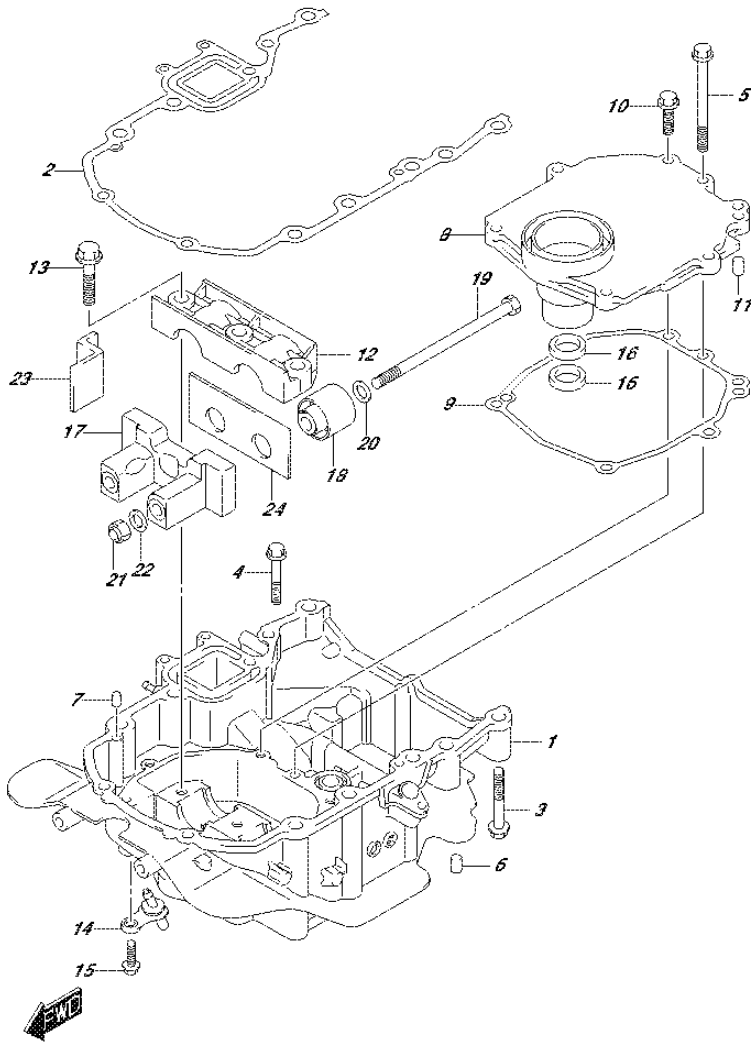

FIG.401D (3-E-8) ENGINE HOLDER (DF40AST E34)

REF NO.	PART NO.	DESCRIPTION	Q'TY	REMARKS
1-1	51110-88L10-0EP	HOLDER, ENGINE (BLACK)	1	
1-2	51110-88L10-Y5S	HOLDER, ENGINE (WHITE)	1	
2	51211-88L00	GASKET, ENGINE HOLDER	1	
3	09116-08159	BOLT (8X55)	8	
4	01550-0845A	BOLT	1	
5	01550-0885A	BOLT	1	
6	09202-08006	PIN (8X12)	2	
7	09202-08006	PIN (8X12)	2	
8	51122-88L00	COVER, MOUNT CASE	1	
9	51123-88L00	GASKET, MOUNT CASE COVER	1	
10	01550-0825A	BOLT	6	
11	09202-08006	PIN (8X12)	2	
12	54137-88L00	COVER, UPPER MOUNT	1	
13	09116-10176	BOLT (10X44)	3	
14	51170-88L00	BRACKET, WATER INDICATOR	1	
15	29116-93J00	BOLT, WATER INDICATOR UNION	1	
16	09282-17011	OIL SEAL (16.5X28X6)	2	
17	54124-88L20	BRACKET, UPPER THRUST	1	
18	54130-88L00	MOUNT, UPPER	2	
19	54166-95J02	BOLT, UPPER MOUNT	2	
20	54114-90J01	WASHER, UPPER MOUNT BOLT (12.5X22X3)	2	
21	09159-12014	NUT	2	
22	54114-90J01	WASHER, UPPER THRUST MOUNT NUT (12.5X22X3)	2	
23	54121-88L00	MOUNT, UPPER THRUST FR	2	
24	54123-88L00	MOUNT, UPPER THRUST RR	1	

FIG.401E

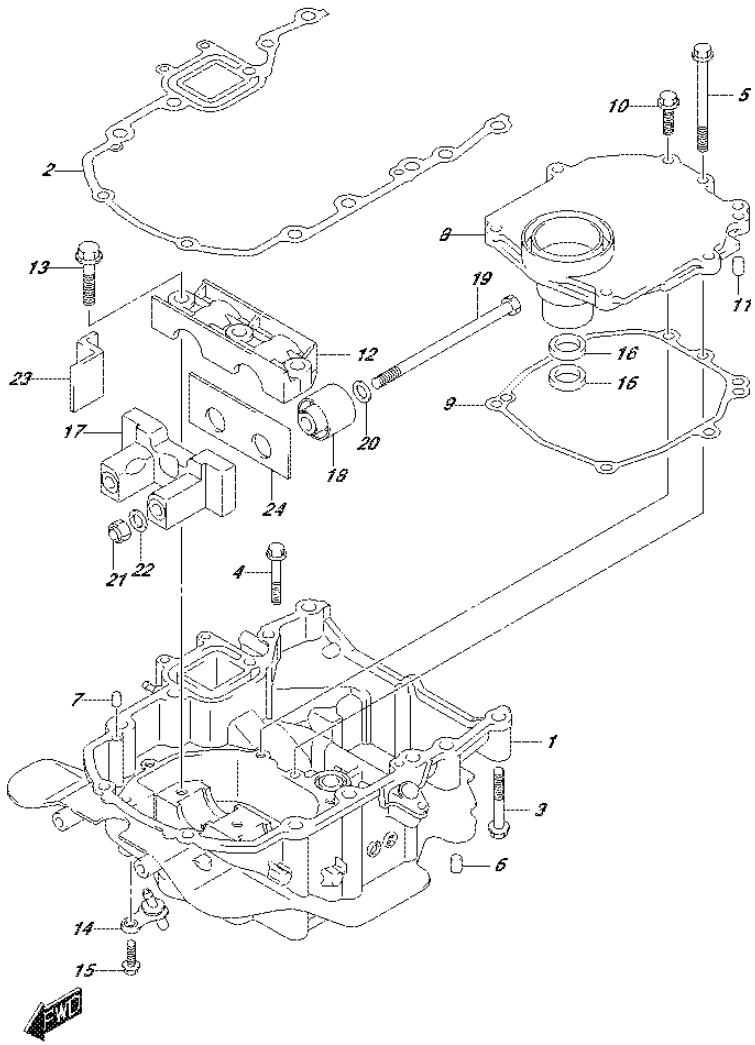

FIG.401E (3-E-9) ENGINE HOLDER (DF50A E01)

REF NO.	PART NO.	DESCRIPTION	Q'TY	REMARKS
1-1	51110-88L10-0EP	HOLDER, ENGINE (BLACK)	1	
1-2	51110-88L10-Y5S	HOLDER, ENGINE (WHITE)	1	
2	51211-88L00	GASKET, ENGINE HOLDER	1	
3	09116-08159	BOLT (8X55)	8	
4	01550-0845A	BOLT	1	
5	01550-0885A	BOLT	1	
6	09202-08006	PIN (8X12)	2	
7	09202-08006	PIN (8X12)	2	
8	51122-88L00	COVER, MOUNT CASE	1	
9	51123-88L00	GASKET, MOUNT CASE COVER	1	
10	01550-0825A	BOLT	6	
11	09202-08006	PIN (8X12)	2	
12	54137-88L00	COVER, UPPER MOUNT	1	
13	09116-10176	BOLT (10X44)	3	
14	51170-88L00	BRACKET, WATER INDICATOR	1	
15	29116-93J00	BOLT, WATER INDICATOR UNION	1	
16	09282-17011	OIL SEAL (16.5X28X6)	2	
17	54124-88L20	BRACKET, UPPER THRUST	1	
18	54130-88L00	MOUNT, UPPER	2	
19	54166-95J02	BOLT, UPPER MOUNT	2	
20	54114-90J01	WASHER, UPPER MOUNT BOLT (12.5X22X3)	2	
21	09159-12014	NUT	2	
22	54114-90J01	WASHER, UPPER THRUST MOUNT NUT (12.5X22X3)	2	
23	54121-88L00	MOUNT, UPPER THRUST FR	2	
24	54123-88L00	MOUNT, UPPER THRUST RR	1	

FIG.401F

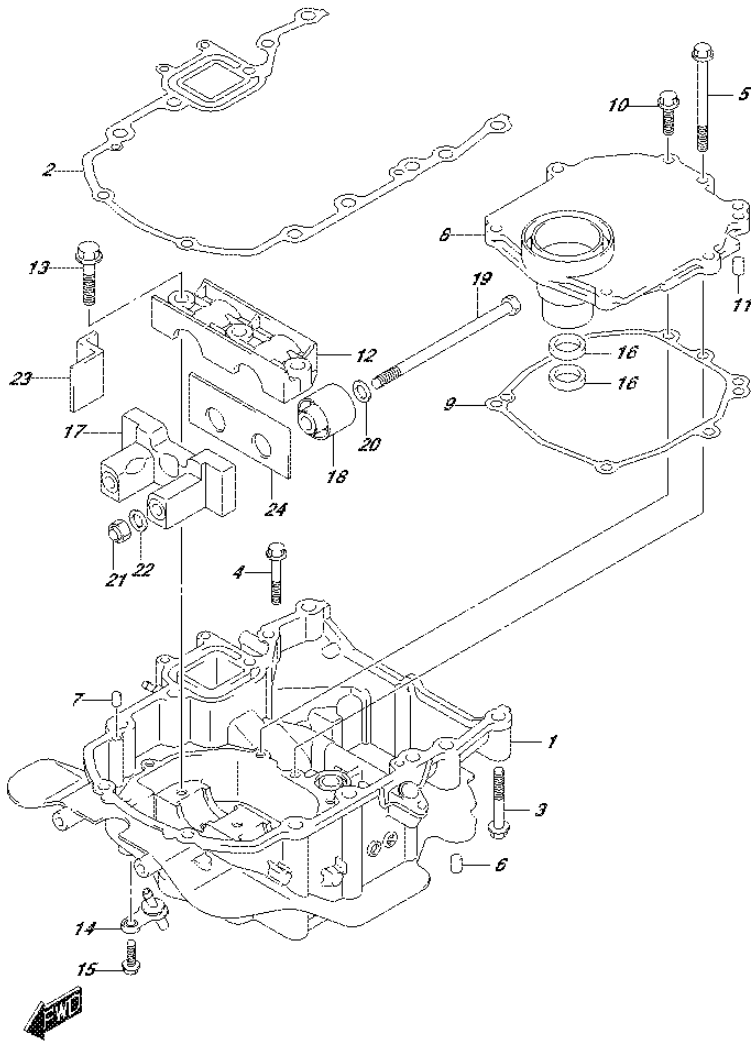

FIG.401F (3-E-10) ENGINE HOLDER (DF50ATH E01)

REF NO.	PART NO.	DESCRIPTION	Q'TY	REMARKS
1	51110-88L10-0EP	HOLDER, ENGINE (BLACK)	1	
2	51211-88L00	GASKET, ENGINE HOLDER	1	
3	09116-08159	BOLT (8X55)	8	
4	01550-0845A	BOLT	1	
5	01550-0885A	BOLT	1	
6	09202-08006	PIN (8X12)	2	
7	09202-08006	PIN (8X12)	2	
8	51122-88L00	COVER, MOUNT CASE	1	
9	51123-88L00	GASKET, MOUNT CASE COVER	1	
10	01550-0825A	BOLT	6	
11	09202-08006	PIN (8X12)	2	
12	54137-88L00	COVER, UPPER MOUNT	1	
13	09116-10176	BOLT (10X44)	3	
14	51170-88L00	BRACKET, WATER INDICATOR	1	
15	29116-93J00	BOLT, WATER INDICATOR UNION	1	
16	09282-17011	OIL SEAL (16.5X28X6)	2	
17	54124-88L20	BRACKET, UPPER THRUST	1	
18	54130-88L00	MOUNT, UPPER	2	
19	54166-95J02	BOLT, UPPER MOUNT	2	
20	54114-90J01	WASHER, UPPER MOUNT BOLT (12.5X22X3)	2	
21	09159-12014	NUT	2	
22	54114-90J01	WASHER, UPPER THRUST MOUNT NUT (12.5X22X3)	2	
23	54121-88L00	MOUNT, UPPER THRUST FR	2	
24	54123-88L00	MOUNT, UPPER THRUST RR	1	

FIG.401G

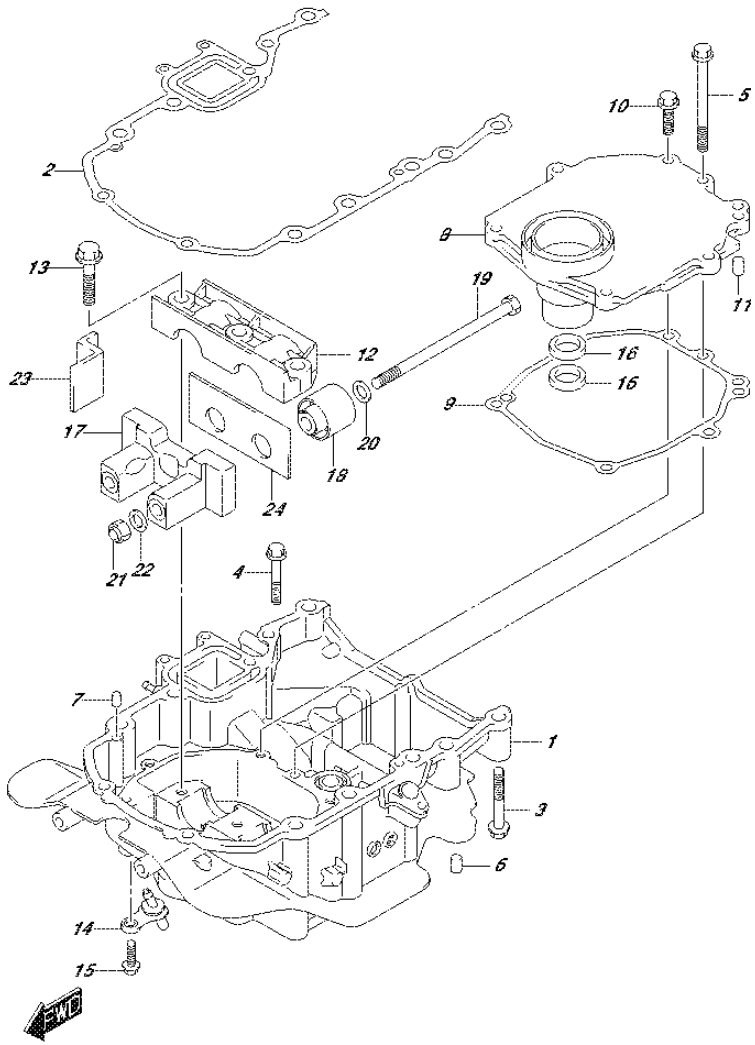

FIG.401G (3-E-11) ENGINE HOLDER (DF60A E01)

REF NO.	PART NO.	DESCRIPTION	Q'TY	REMARKS
1-1	51110-88L10-0EP	HOLDER, ENGINE (BLACK)	1	
1-2	51110-88L10-Y5S	HOLDER, ENGINE (WHITE)	1	
2	51211-88L00	GASKET, ENGINE HOLDER	1	
3	09116-08159	BOLT (8X55)	8	
4	01550-0845A	BOLT	1	
5	01550-0885A	BOLT	1	
6	09202-08006	PIN (8X12)	2	
7	09202-08006	PIN (8X12)	2	
8	51122-88L00	COVER, MOUNT CASE	1	
9	51123-88L00	GASKET, MOUNT CASE COVER	1	
10	01550-0825A	BOLT	6	
11	09202-08006	PIN (8X12)	2	
12	54137-88L00	COVER, UPPER MOUNT	1	
13	09116-10176	BOLT (10X44)	3	
14	51170-88L00	BRACKET, WATER INDICATOR	1	
15	29116-93J00	BOLT, WATER INDICATOR UNION	1	
16	09282-17011	OIL SEAL (16.5X28X6)	2	
17	54124-88L20	BRACKET, UPPER THRUST	1	
18	54130-88L00	MOUNT, UPPER	2	
19	54166-95J02	BOLT, UPPER MOUNT	2	
20	54114-90J01	WASHER, UPPER MOUNT BOLT (12.5X22X3)	2	
21	09159-12014	NUT	2	
22	54114-90J01	WASHER, UPPER THRUST MOUNT NUT (12.5X22X3)	2	
23	54121-88L00	MOUNT, UPPER THRUST FR	2	
24	54123-88L00	MOUNT, UPPER THRUST RR	1	

FIG.401H

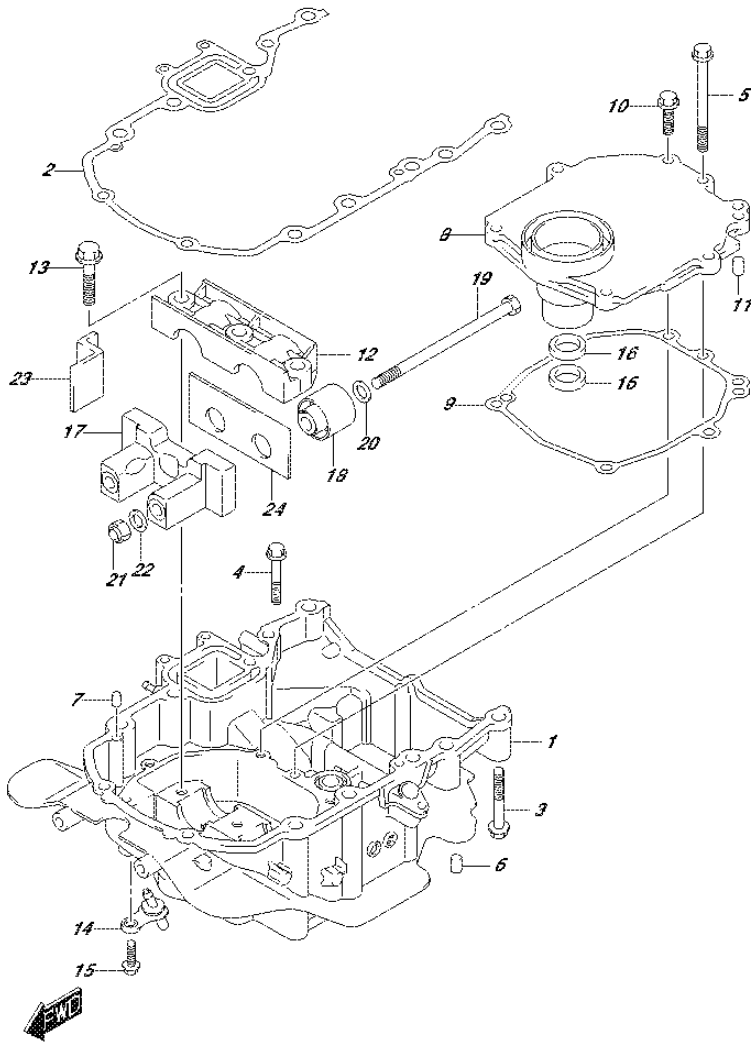

FIG.401H (3-E-12) ENGINE HOLDER (DF60A E40)

REF NO.	PART NO.	DESCRIPTION	Q'TY	REMARKS
1-1	51110-88L10-0EP	HOLDER, ENGINE (BLACK)	1	
1-2	51110-88L10-Y5S	HOLDER, ENGINE (WHITE)	1	
2	51211-88L00	GASKET, ENGINE HOLDER	1	
3	09116-08159	BOLT (8X55)	8	
4	01550-0845A	BOLT	1	
5	01550-0885A	BOLT	1	
6	09202-08006	PIN (8X12)	2	
7	09202-08006	PIN (8X12)	2	
8	51122-88L00	COVER, MOUNT CASE	1	
9	51123-88L00	GASKET, MOUNT CASE COVER	1	
10	01550-0825A	BOLT	6	
11	09202-08006	PIN (8X12)	2	
12	54137-88L00	COVER, UPPER MOUNT	1	
13	09116-10176	BOLT (10X44)	3	
14	51170-88L00	BRACKET, WATER INDICATOR	1	
15	29116-93J00	BOLT, WATER INDICATOR UNION	1	
16	09282-17011	OIL SEAL (16.5X28X6)	2	
17	54124-88L20	BRACKET, UPPER THRUST	1	
18	54130-88L00	MOUNT, UPPER	2	
19	54166-95J02	BOLT, UPPER MOUNT	2	
20	54114-90J01	WASHER, UPPER MOUNT BOLT (12.5X22X3)	2	
21	09159-12014	NUT	2	
22	54114-90J01	WASHER, UPPER THRUST MOUNT NUT (12.5X22X3)	2	
23	54121-88L00	MOUNT, UPPER THRUST FR	2	
24	54123-88L00	MOUNT, UPPER THRUST RR	1	

FIG.401J

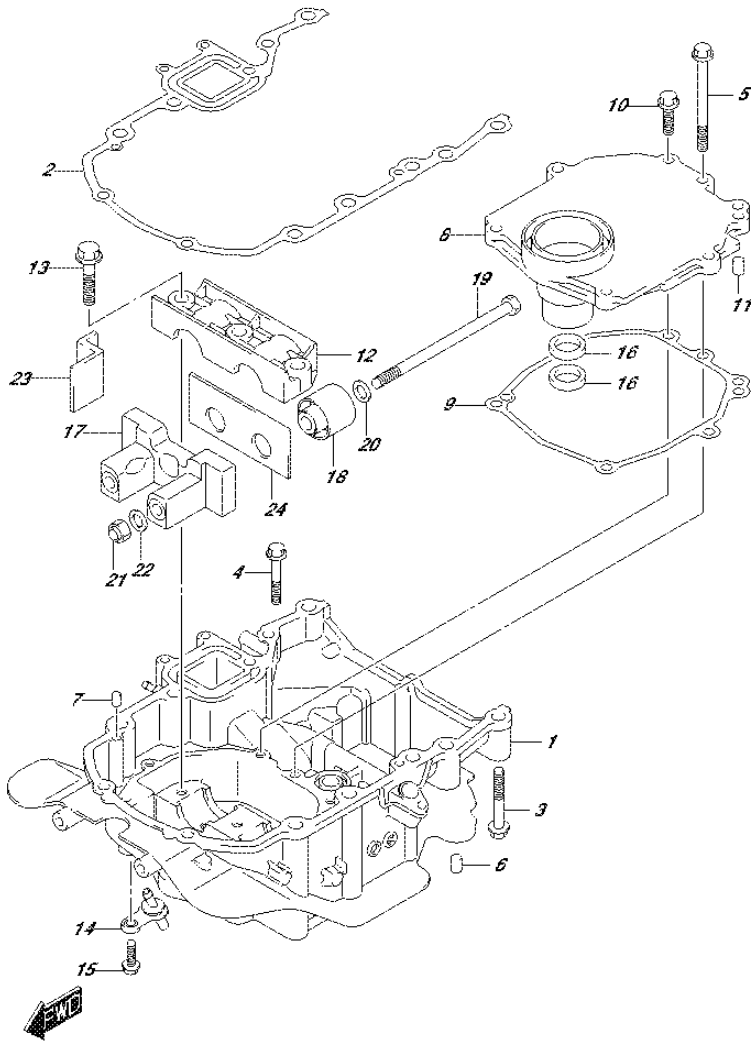

FIG.401J (3-E-13) ENGINE HOLDER (DF60AQH E01)

REF NO.	PART NO.	DESCRIPTION	Q'TY	REMARKS
1	51110-88L10-0EP	HOLDER, ENGINE (BLACK)	1	
2	51211-88L00	GASKET, ENGINE HOLDER	1	
3	09116-08159	BOLT (8X55)	8	
4	01550-0845A	BOLT	1	
5	01550-0885A	BOLT	1	
6	09202-08006	PIN (8X12)	2	
7	09202-08006	PIN (8X12)	2	
8	51122-88L00	COVER, MOUNT CASE	1	
9	51123-88L00	GASKET, MOUNT CASE COVER	1	
10	01550-0825A	BOLT	6	
11	09202-08006	PIN (8X12)	2	
12	54137-88L00	COVER, UPPER MOUNT	1	
13	09116-10176	BOLT (10X44)	3	
14	51170-88L00	BRACKET, WATER INDICATOR	1	
15	29116-93J00	BOLT, WATER INDICATOR UNION	1	
16	09282-17011	OIL SEAL (16.5X28X6)	2	
17	54124-88L20	BRACKET, UPPER THRUST	1	
18	54130-88L00	MOUNT, UPPER	2	
19	54166-95J02	BOLT, UPPER MOUNT	2	
20	54114-90J01	WASHER, UPPER MOUNT BOLT (12.5X22X3)	2	
21	09159-12014	NUT	2	
22	54114-90J01	WASHER, UPPER THRUST MOUNT NUT (12.5X22X3)	2	
23	54121-88L00	MOUNT, UPPER THRUST FR	2	
24	54123-88L00	MOUNT, UPPER THRUST RR	1	

FIG.401K

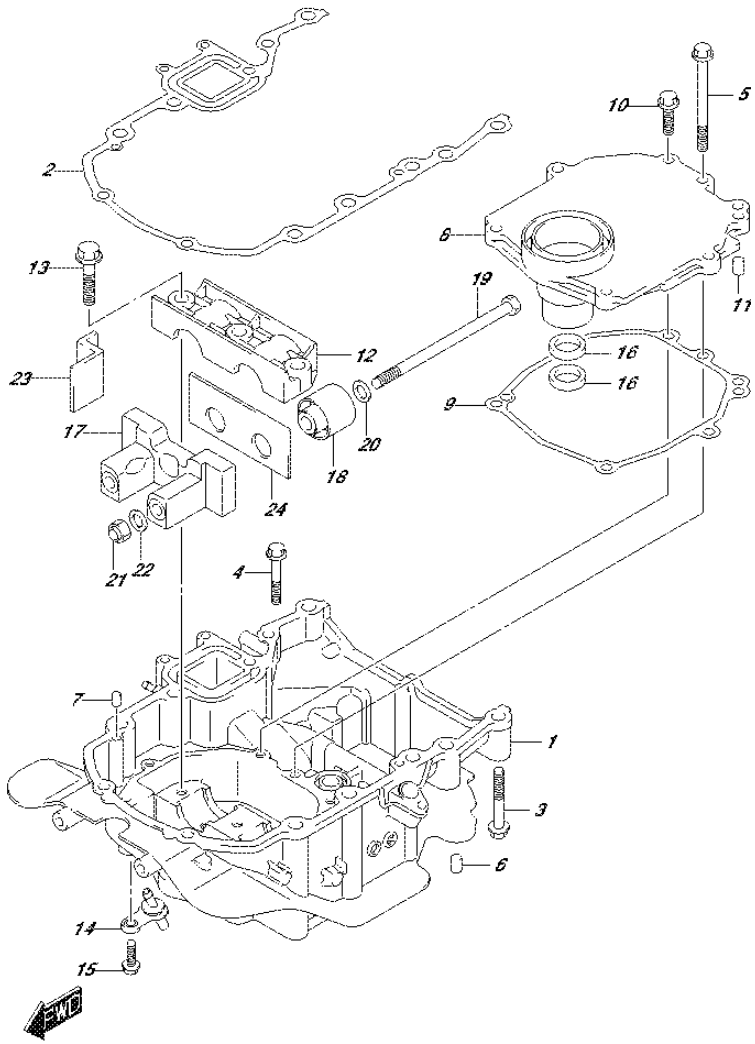

FIG.401K (3-E-14) ENGINE HOLDER (DF60AQH E40)

REF NO.	PART NO.	DESCRIPTION	Q'TY	REMARKS
1	51110-88L10-0EP	HOLDER, ENGINE (BLACK)	1	
2	51211-88L00	GASKET, ENGINE HOLDER	1	
3	09116-08159	BOLT (8X55)	8	
4	01550-0845A	BOLT	1	
5	01550-0885A	BOLT	1	
6	09202-08006	PIN (8X12)	2	
7	09202-08006	PIN (8X12)	2	
8	51122-88L00	COVER, MOUNT CASE	1	
9	51123-88L00	GASKET, MOUNT CASE COVER	1	
10	01550-0825A	BOLT	6	
11	09202-08006	PIN (8X12)	2	
12	54137-88L00	COVER, UPPER MOUNT	1	
13	09116-10176	BOLT (10X44)	3	
14	51170-88L00	BRACKET, WATER INDICATOR	1	
15	29116-93J00	BOLT, WATER INDICATOR UNION	1	
16	09282-17011	OIL SEAL (16.5X28X6)	2	
17	54124-88L20	BRACKET, UPPER THRUST	1	
18	54130-88L00	MOUNT, UPPER	2	
19	54166-95J02	BOLT, UPPER MOUNT	2	
20	54114-90J01	WASHER, UPPER MOUNT BOLT (12.5X22X3)	2	
21	09159-12014	NUT	2	
22	54114-90J01	WASHER, UPPER THRUST MOUNT NUT (12.5X22X3)	2	
23	54121-88L00	MOUNT, UPPER THRUST FR	2	
24	54123-88L00	MOUNT, UPPER THRUST RR	1	

FIG.401L

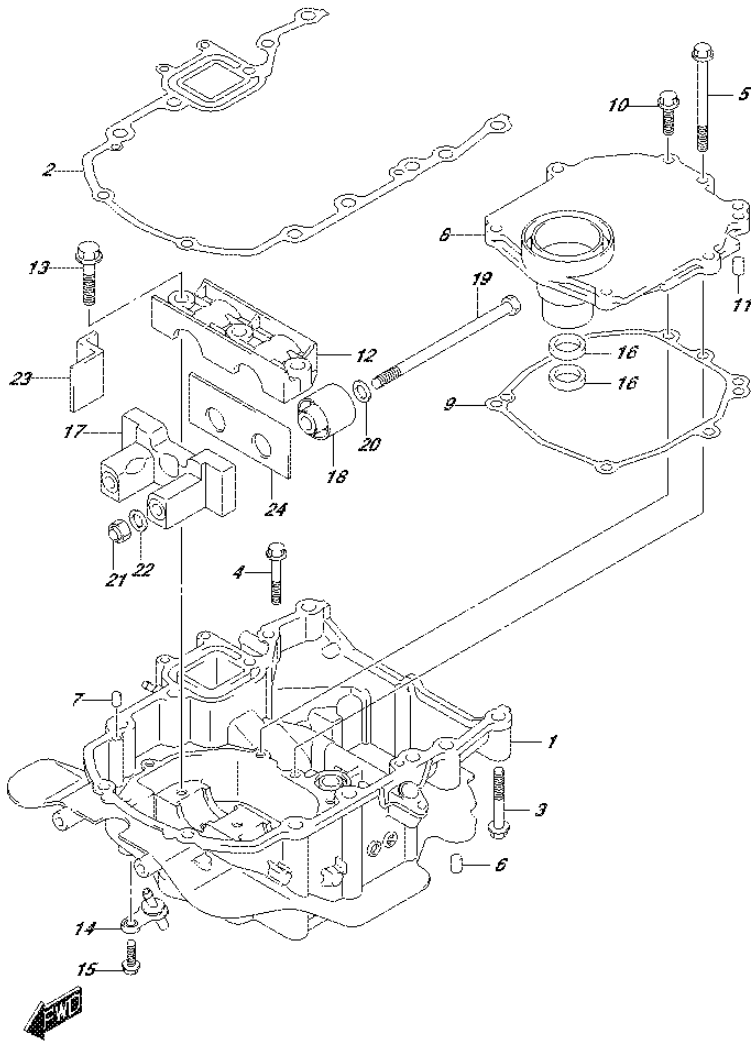

FIG.401L (3-E-15) ENGINE HOLDER (DF60ATH E01)

REF NO.	PART NO.	DESCRIPTION	Q'TY	REMARKS
1	51110-88L10-0EP	HOLDER, ENGINE (BLACK)	1	
2	51211-88L00	GASKET, ENGINE HOLDER	1	
3	09116-08159	BOLT (8X55)	8	
4	01550-0845A	BOLT	1	
5	01550-0885A	BOLT	1	
6	09202-08006	PIN (8X12)	2	
7	09202-08006	PIN (8X12)	2	
8	51122-88L00	COVER, MOUNT CASE	1	
9	51123-88L00	GASKET, MOUNT CASE COVER	1	
10	01550-0825A	BOLT	6	
11	09202-08006	PIN (8X12)	2	
12	54137-88L00	COVER, UPPER MOUNT	1	
13	09116-10176	BOLT (10X44)	3	
14	51170-88L00	BRACKET, WATER INDICATOR	1	
15	29116-93J00	BOLT, WATER INDICATOR UNION	1	
16	09282-17011	OIL SEAL (16.5X28X6)	2	
17	54124-88L20	BRACKET, UPPER THRUST	1	
18	54130-88L00	MOUNT, UPPER	2	
19	54166-95J02	BOLT, UPPER MOUNT	2	
20	54114-90J01	WASHER, UPPER MOUNT BOLT (12.5X22X3)	2	
21	09159-12014	NUT	2	
22	54114-90J01	WASHER, UPPER THRUST MOUNT NUT (12.5X22X3)	2	
23	54121-88L00	MOUNT, UPPER THRUST FR	2	
24	54123-88L00	MOUNT, UPPER THRUST RR	1	

FIG.401M

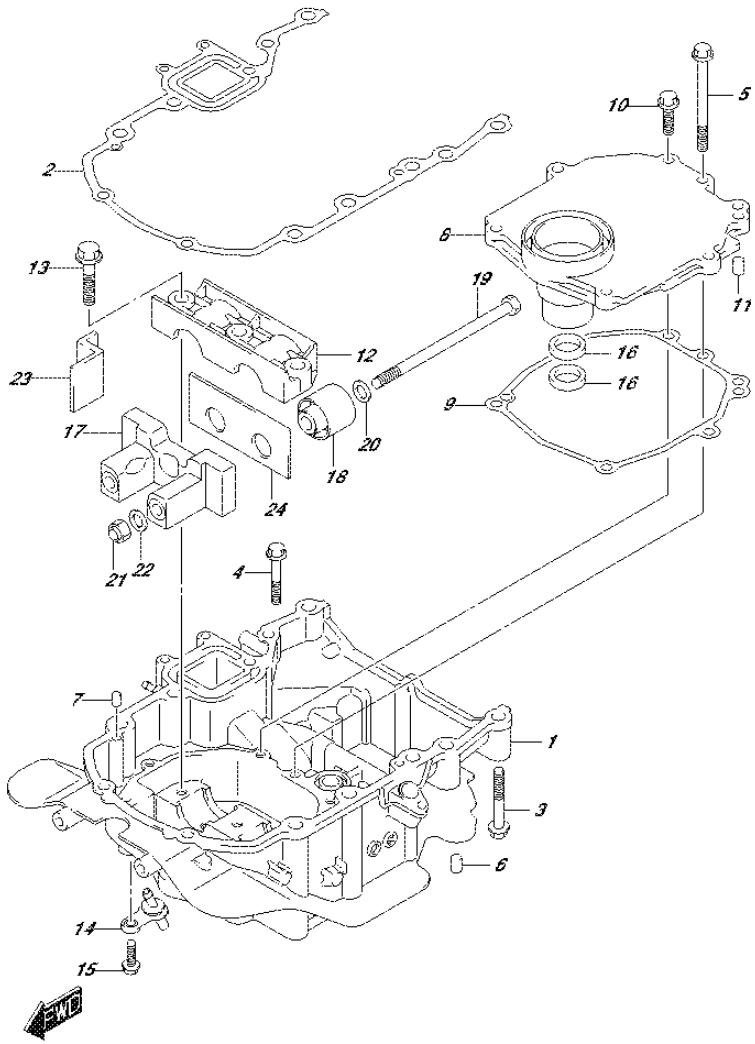

FIG.401M (3-F-2) ENGINE HOLDER (DF60ATH E40)

REF NO.	PART NO.	DESCRIPTION	Q'TY	REMARKS
1	51110-88L10-0EP	HOLDER, ENGINE (BLACK)	1	
2	51211-88L00	GASKET, ENGINE HOLDER	1	
3	09116-08159	BOLT (8X55)	8	
4	01550-0845A	BOLT	1	
5	01550-0885A	BOLT	1	
6	09202-08006	PIN (8X12)	2	
7	09202-08006	PIN (8X12)	2	
8	51122-88L00	COVER, MOUNT CASE	1	
9	51123-88L00	GASKET, MOUNT CASE COVER	1	
10	01550-0825A	BOLT	6	
11	09202-08006	PIN (8X12)	2	
12	54137-88L00	COVER, UPPER MOUNT	1	
13	09116-10176	BOLT (10X44)	3	
14	51170-88L00	BRACKET, WATER INDICATOR	1	
15	29116-93J00	BOLT, WATER INDICATOR UNION	1	
16	09282-17011	OIL SEAL (16.5X28X6)	2	
17	54124-88L20	BRACKET, UPPER THRUST	1	
18	54130-88L00	MOUNT, UPPER	2	
19	54166-95J02	BOLT, UPPER MOUNT	2	
20	54114-90J01	WASHER, UPPER MOUNT BOLT (12.5X22X3)	2	
21	09159-12014	NUT	2	
22	54114-90J01	WASHER, UPPER THRUST MOUNT NUT (12.5X22X3)	2	
23	54121-88L00	MOUNT, UPPER THRUST FR	2	
24	54123-88L00	MOUNT, UPPER THRUST RR	1	

FIG.401N

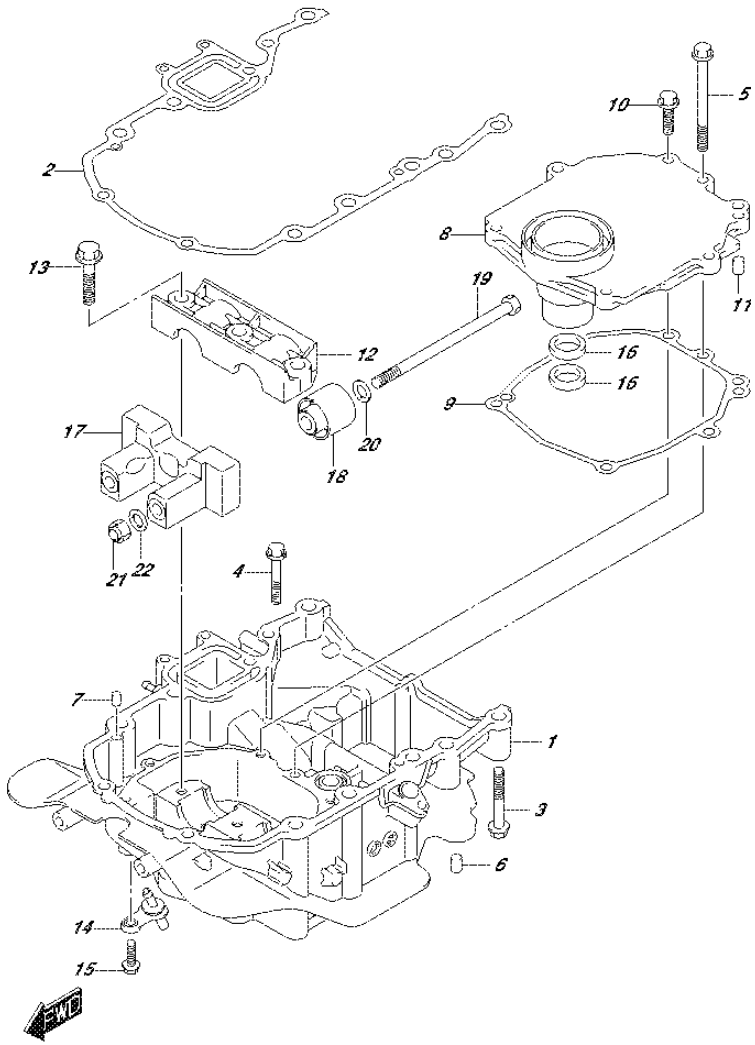

FIG.401N (3-F-3) ENGINE HOLDER (DF50AVT E01)

REF NO.	PART NO.	DESCRIPTION	Q'TY	REMARKS
1	51110-88L10-0EP	HOLDER, ENGINE (BLACK)	1	
2	51211-88L00	GASKET, ENGINE HOLDER	1	
3	09116-08159	BOLT (8X55)	8	
4	01550-0845A	BOLT	1	
5	01550-0885A	BOLT	1	
6	09202-08006	PIN (8X12)	2	
7	09202-08006	PIN (8X12)	2	
8	51122-88L00	COVER, MOUNT CASE	1	
9	51123-88L00	GASKET, MOUNT CASE COVER	1	
10	01550-0825A	BOLT	6	
11	09202-08006	PIN (8X12)	2	
12	54137-88L00	COVER, UPPER MOUNT	1	
13	09116-10176	BOLT (10X44)	3	
14	51170-88L00	BRACKET, WATER INDICATOR	1	
15	29116-93J00	BOLT, WATER INDICATOR UNION	1	
16	09282-17011	OIL SEAL (16.5X28X6)	2	
17	54120-88L00	MOUNT, UPPER THRUST F	1	
18	54130-88L00	MOUNT, UPPER	2	
19	54166-95J02	BOLT, UPPER MOUNT	2	
20	54114-90J01	WASHER, UPPER MOUNT BOLT (12.5X22X3)	2	
21	09159-12014	NUT	2	
22	54114-90J01	WASHER, UPPER THRUST MOUNT NUT (12.5X22X3)	2	

FIG.401P

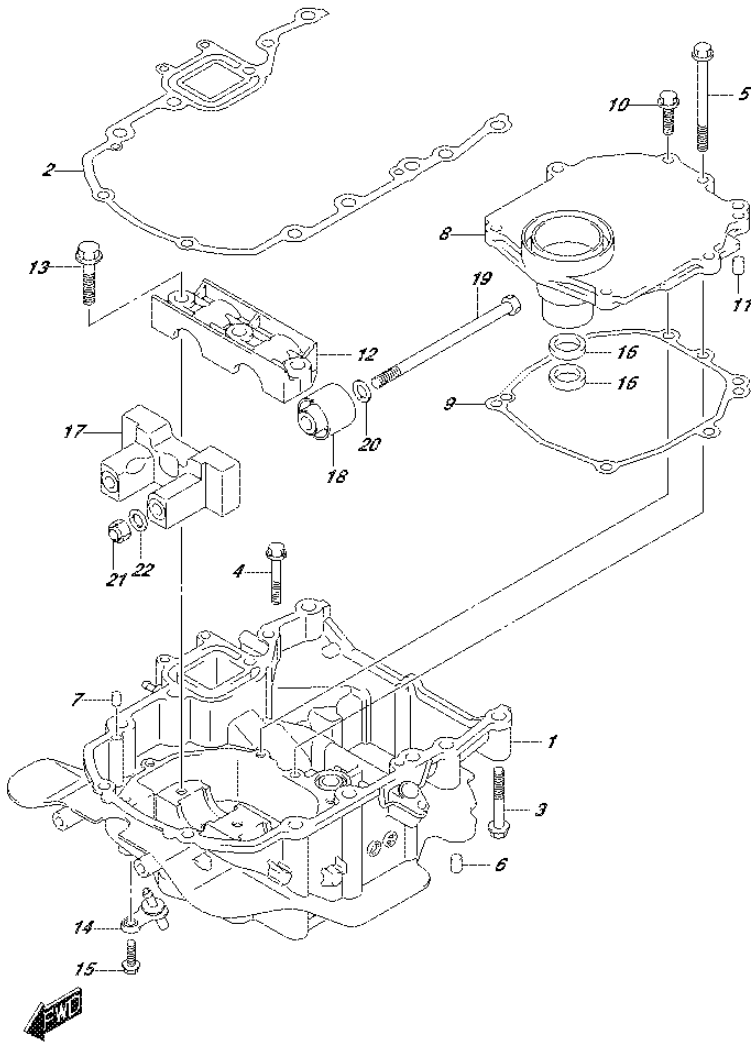

FIG.401P (3-F-4) ENGINE HOLDER (DF50AVTH E01)

REF NO.	PART NO.	DESCRIPTION	Q'TY	REMARKS
1	51110-88L10-0EP	HOLDER, ENGINE (BLACK)	1	
2	51211-88L00	GASKET, ENGINE HOLDER	1	
3	09116-08159	BOLT (8X55)	8	
4	01550-0845A	BOLT	1	
5	01550-0885A	BOLT	1	
6	09202-08006	PIN (8X12)	2	
7	09202-08006	PIN (8X12)	2	
8	51122-88L00	COVER, MOUNT CASE	1	
9	51123-88L00	GASKET, MOUNT CASE COVER	1	
10	01550-0825A	BOLT	6	
11	09202-08006	PIN (8X12)	2	
12	54137-88L00	COVER, UPPER MOUNT	1	
13	09116-10176	BOLT (10X44)	3	
14	51170-88L00	BRACKET, WATER INDICATOR	1	
15	29116-93J00	BOLT, WATER INDICATOR UNION	1	
16	09282-17011	OIL SEAL (16.5X28X6)	2	
17	54120-88L00	MOUNT, UPPER THRUST F	1	
18	54130-88L00	MOUNT, UPPER	2	
19	54166-95J02	BOLT, UPPER MOUNT	2	
20	54114-90J01	WASHER, UPPER MOUNT BOLT (12.5X22X3)	2	
21	09159-12014	NUT	2	
22	54114-90J01	WASHER, UPPER THRUST MOUNT NUT (12.5X22X3)	2	

FIG.401R

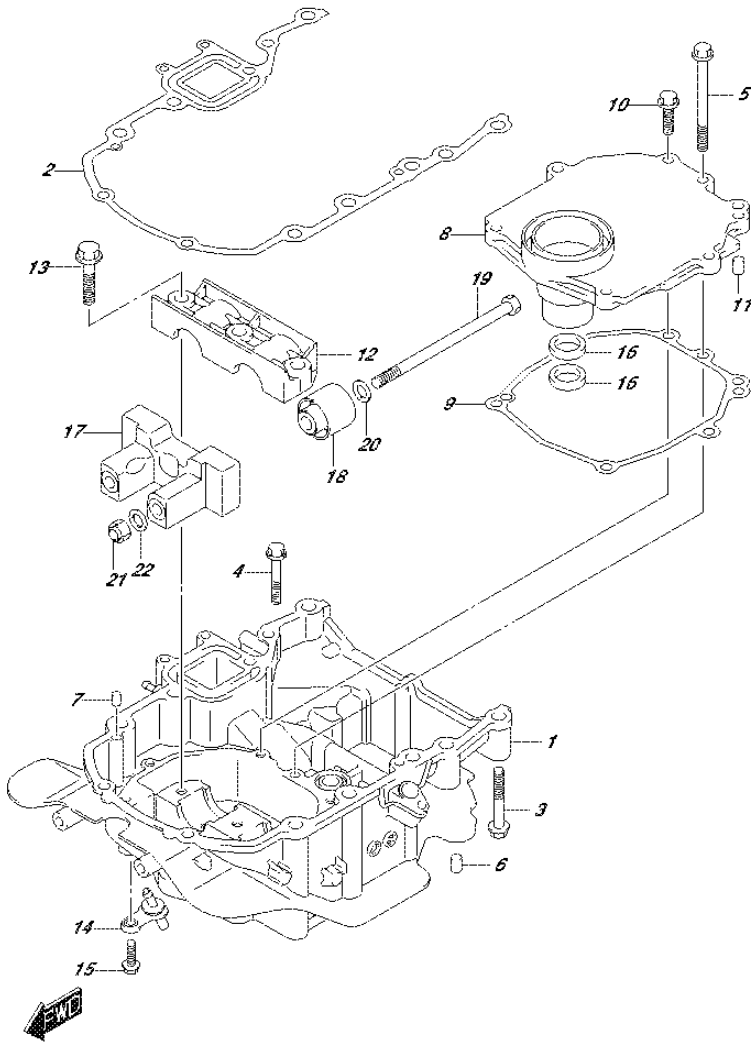

FIG.401R (3-F-5) ENGINE HOLDER (DF60AVT E01)

REF NO.	PART NO.	DESCRIPTION	Q'TY	REMARKS
1	51110-88L10-0EP	HOLDER, ENGINE (BLACK)	1	
2	51211-88L00	GASKET, ENGINE HOLDER	1	
3	09116-08159	BOLT (8X55)	8	
4	01550-0845A	BOLT	1	
5	01550-0885A	BOLT	1	
6	09202-08006	PIN (8X12)	2	
7	09202-08006	PIN (8X12)	2	
8	51122-88L00	COVER, MOUNT CASE	1	
9	51123-88L00	GASKET, MOUNT CASE COVER	1	
10	01550-0825A	BOLT	6	
11	09202-08006	PIN (8X12)	2	
12	54137-88L00	COVER, UPPER MOUNT	1	
13	09116-10176	BOLT (10X44)	3	
14	51170-88L00	BRACKET, WATER INDICATOR	1	
15	29116-93J00	BOLT, WATER INDICATOR UNION	1	
16	09282-17011	OIL SEAL (16.5X28X6)	2	
17	54120-88L00	MOUNT, UPPER THRUST F	1	
18	54130-88L00	MOUNT, UPPER	2	
19	54166-95J02	BOLT, UPPER MOUNT	2	
20	54114-90J01	WASHER, UPPER MOUNT BOLT (12.5X22X3)	2	
21	09159-12014	NUT	2	
22	54114-90J01	WASHER, UPPER THRUST MOUNT NUT (12.5X22X3)	2	

FIG.401S

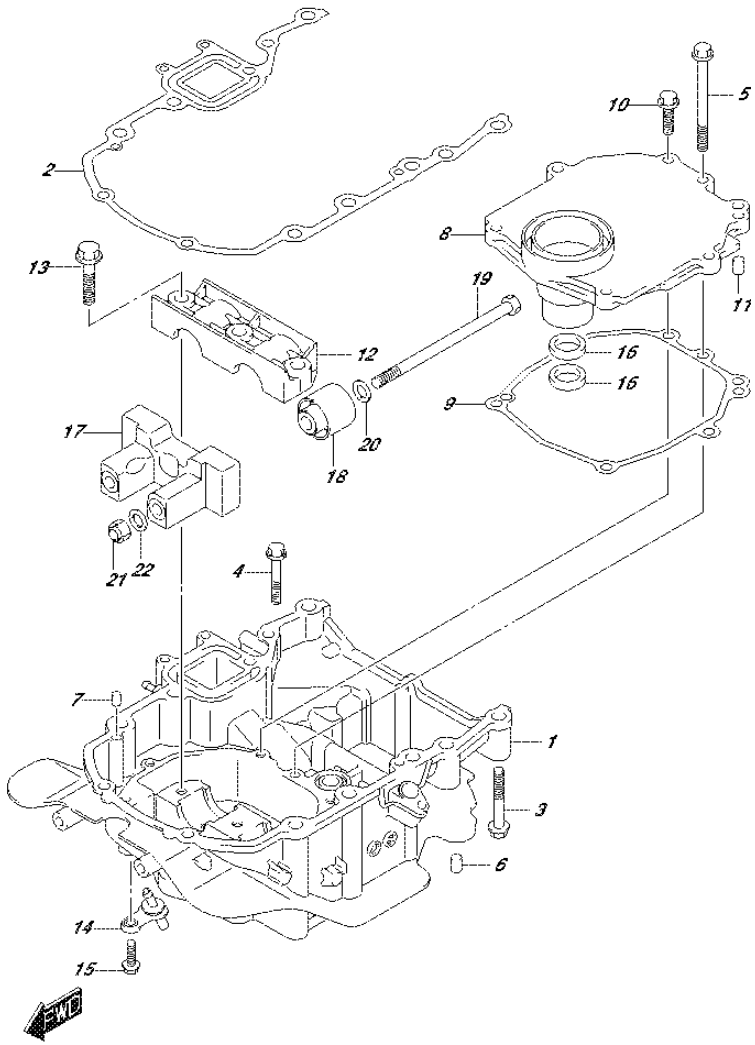

FIG.401S (3-F-6) ENGINE HOLDER (DF60AVT E40)

REF NO.	PART NO.	DESCRIPTION	Q'TY	REMARKS
1	51110-88L10-0EP	HOLDER, ENGINE (BLACK)	1	
2	51211-88L00	GASKET, ENGINE HOLDER	1	
3	09116-08159	BOLT (8X55)	8	
4	01550-0845A	BOLT	1	
5	01550-0885A	BOLT	1	
6	09202-08006	PIN (8X12)	2	
7	09202-08006	PIN (8X12)	2	
8	51122-88L00	COVER, MOUNT CASE	1	
9	51123-88L00	GASKET, MOUNT CASE COVER	1	
10	01550-0825A	BOLT	6	
11	09202-08006	PIN (8X12)	2	
12	54137-88L00	COVER, UPPER MOUNT	1	
13	09116-10176	BOLT (10X44)	3	
14	51170-88L00	BRACKET, WATER INDICATOR	1	
15	29116-93J00	BOLT, WATER INDICATOR UNION	1	
16	09282-17011	OIL SEAL (16.5X28X6)	2	
17	54120-88L00	MOUNT, UPPER THRUST F	1	
18	54130-88L00	MOUNT, UPPER	2	
19	54166-95J02	BOLT, UPPER MOUNT	2	
20	54114-90J01	WASHER, UPPER MOUNT BOLT (12.5X22X3)	2	
21	09159-12014	NUT	2	
22	54114-90J01	WASHER, UPPER THRUST MOUNT NUT (12.5X22X3)	2	

FIG.401T

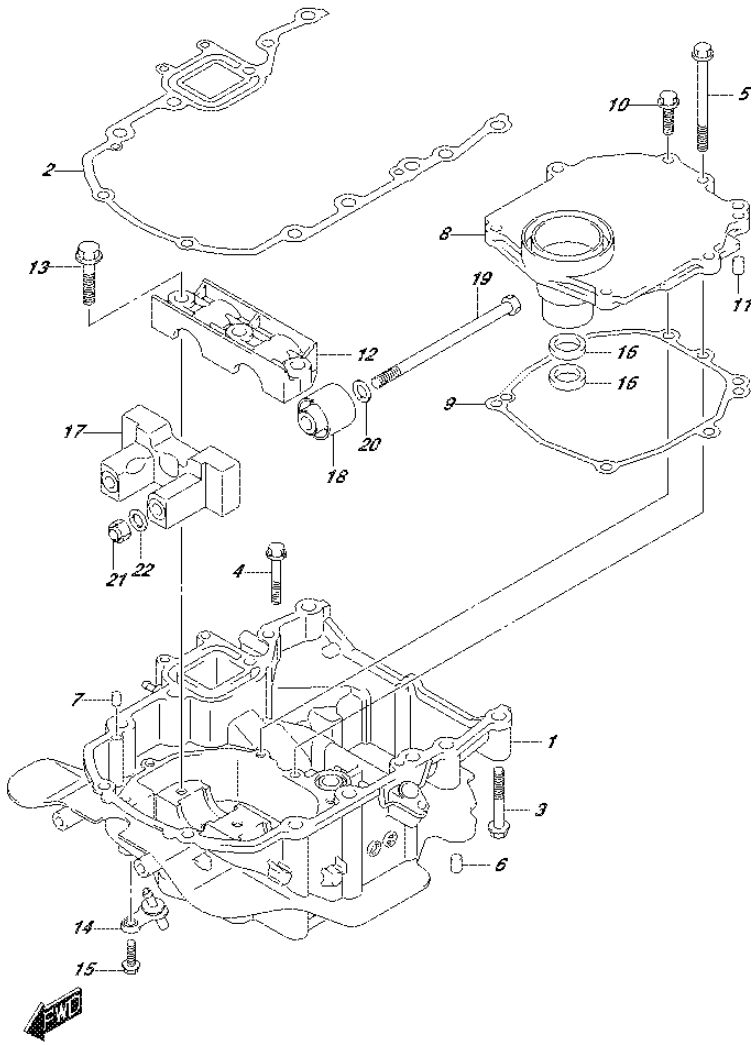

FIG.401T (3-F-7) ENGINE HOLDER (DF60AVTH E01)

REF NO.	PART NO.	DESCRIPTION	Q'TY	REMARKS
1	51110-88L10-0EP	HOLDER, ENGINE (BLACK)	1	
2	51211-88L00	GASKET, ENGINE HOLDER	1	
3	09116-08159	BOLT (8X55)	8	
4	01550-0845A	BOLT	1	
5	01550-0885A	BOLT	1	
6	09202-08006	PIN (8X12)	2	
7	09202-08006	PIN (8X12)	2	
8	51122-88L00	COVER, MOUNT CASE	1	
9	51123-88L00	GASKET, MOUNT CASE COVER	1	
10	01550-0825A	BOLT	6	
11	09202-08006	PIN (8X12)	2	
12	54137-88L00	COVER, UPPER MOUNT	1	
13	09116-10176	BOLT (10X44)	3	
14	51170-88L00	BRACKET, WATER INDICATOR	1	
15	29116-93J00	BOLT, WATER INDICATOR UNION	1	
16	09282-17011	OIL SEAL (16.5X28X6)	2	
17	54120-88L00	MOUNT, UPPER THRUST F	1	
18	54130-88L00	MOUNT, UPPER	2	
19	54166-95J02	BOLT, UPPER MOUNT	2	
20	54114-90J01	WASHER, UPPER MOUNT BOLT (12.5X22X3)	2	
21	09159-12014	NUT	2	
22	54114-90J01	WASHER, UPPER THRUST MOUNT NUT (12.5X22X3)	2	

FIG.401U

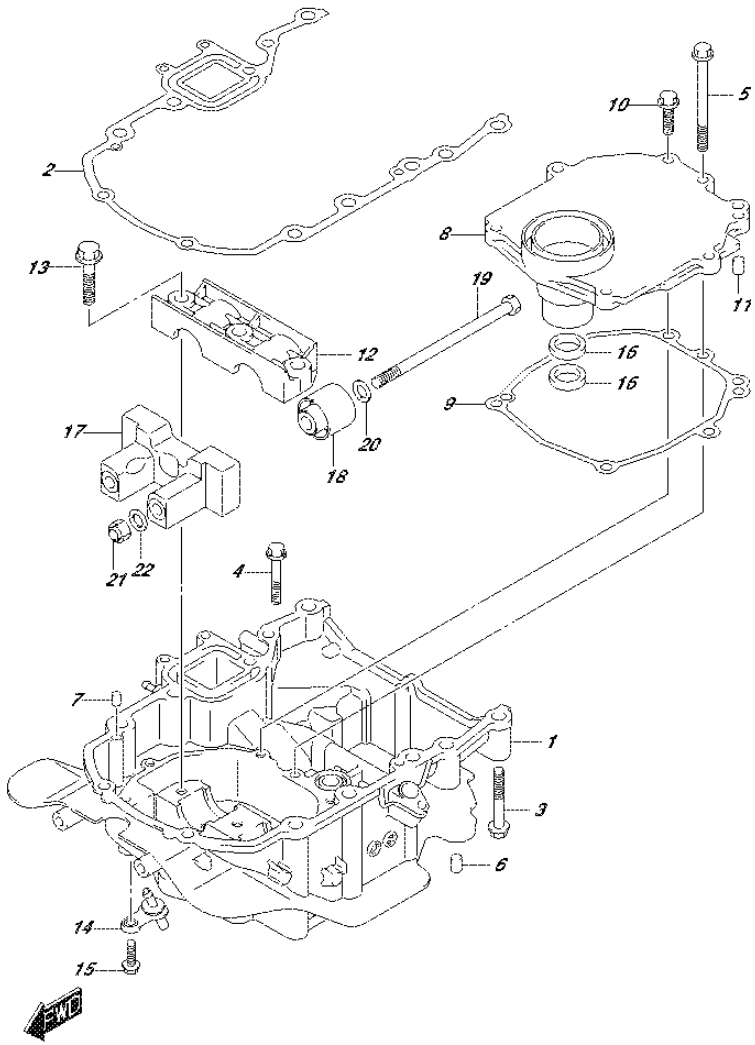

FIG.401U (3-F-8) ENGINE HOLDER (DF60AVTH E40)

REF NO.	PART NO.	DESCRIPTION	Q'TY	REMARKS
1	51110-88L10-0EP	HOLDER, ENGINE (BLACK)	1	
2	51211-88L00	GASKET, ENGINE HOLDER	1	
3	09116-08159	BOLT (8X55)	8	
4	01550-0845A	BOLT	1	
5	01550-0885A	BOLT	1	
6	09202-08006	PIN (8X12)	2	
7	09202-08006	PIN (8X12)	2	
8	51122-88L00	COVER, MOUNT CASE	1	
9	51123-88L00	GASKET, MOUNT CASE COVER	1	
10	01550-0825A	BOLT	6	
11	09202-08006	PIN (8X12)	2	
12	54137-88L00	COVER, UPPER MOUNT	1	
13	09116-10176	BOLT (10X44)	3	
14	51170-88L00	BRACKET, WATER INDICATOR	1	
15	29116-93J00	BOLT, WATER INDICATOR UNION	1	
16	09282-17011	OIL SEAL (16.5X28X6)	2	
17	54120-88L00	MOUNT, UPPER THRUST F	1	
18	54130-88L00	MOUNT, UPPER	2	
19	54166-95J02	BOLT, UPPER MOUNT	2	
20	54114-90J01	WASHER, UPPER MOUNT BOLT (12.5X22X3)	2	
21	09159-12014	NUT	2	
22	54114-90J01	WASHER, UPPER THRUST MOUNT NUT (12.5X22X3)	2	

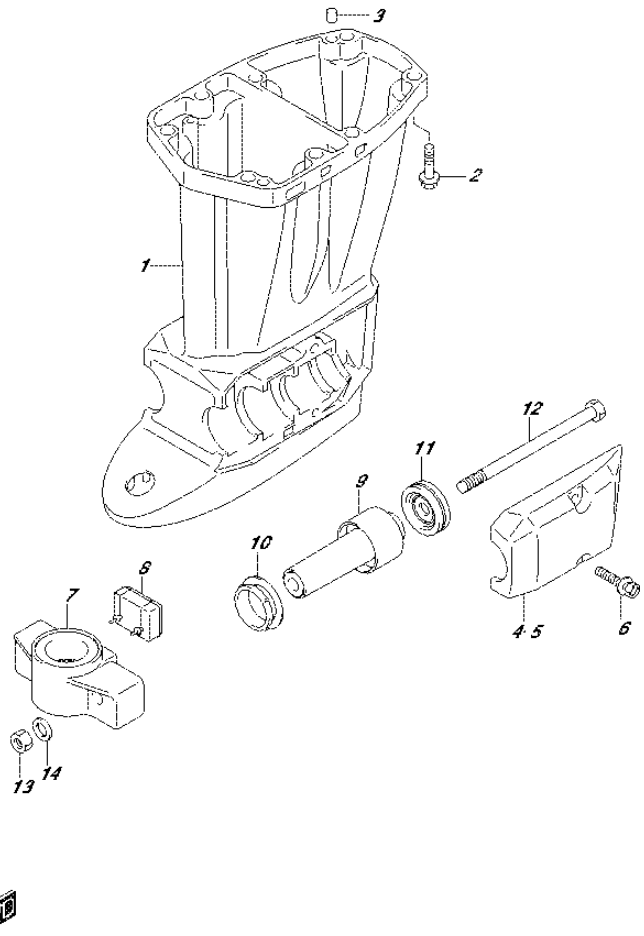

FIG.405A (3-F-9) DRIVE SHAFT HOUSING (DF40A E01)

REF NO.	PART NO.	DESCRIPTION	Q'TY	REMARKS
1-1	52111-88L00-0EP	HOUSING, DRIVE SHAFT (S) (BLACK)	1	W/TRANSOM(S)
1-2	52111-88L00-Y5S	HOUSING, DRIVE SHAFT (S) (WHITE)	1	W/TRANSOM(S)
1-3	52111-88L10-0EP	HOUSING, DRIVE SHAFT (L) (BLACK)	1	W/TRANSOM(L)
1-4	52111-88L10-Y5S	HOUSING, DRIVE SHAFT (L) (WHITE)	1	W/TRANSOM(L)
2	09116-10176	BOLT (10X44)	8	
3	09202-08006	PIN (8X12)	2	
4-1	54221-88L20-0EP	COVER, LOWER MOUNT STBD (BLACK)	1	
4-2	54221-88L20-Y5S	COVER, LOWER MOUNT STBD (WHITE)	1	
5-1	54231-88L10-0EP	COVER, LOWER MOUNT PORT (BLACK)	1	
5-2	54231-88L10-Y5S	COVER, LOWER MOUNT PORT (WHITE)	1	
6	09116-10176	BOLT (10X44)	4	
7-1	54211-87J30-0EP	BRACKET, LOWER MOUNT (BLACK)	1	
7-2	54211-87J30-Y5S	BRACKET, LOWER MOUNT (WHITE)	1	
8	54151-88L00	MOUNT, LOWER THRUST	1	
9	54160-88L10	MOUNT, LOWER	2	
10	54167-87L01	MOUNT, LOWER SIDE	2	
11	54180-88L00	DAMPER, FORWARD STOPPER	2	
12	54166-95J02	BOLT, LOWER MOUNT	2	
13	09159-12014	NUT	2	
14	54114-90J01	WASHER, LOWER MOUNT NUT (12.5X22X3)	2	

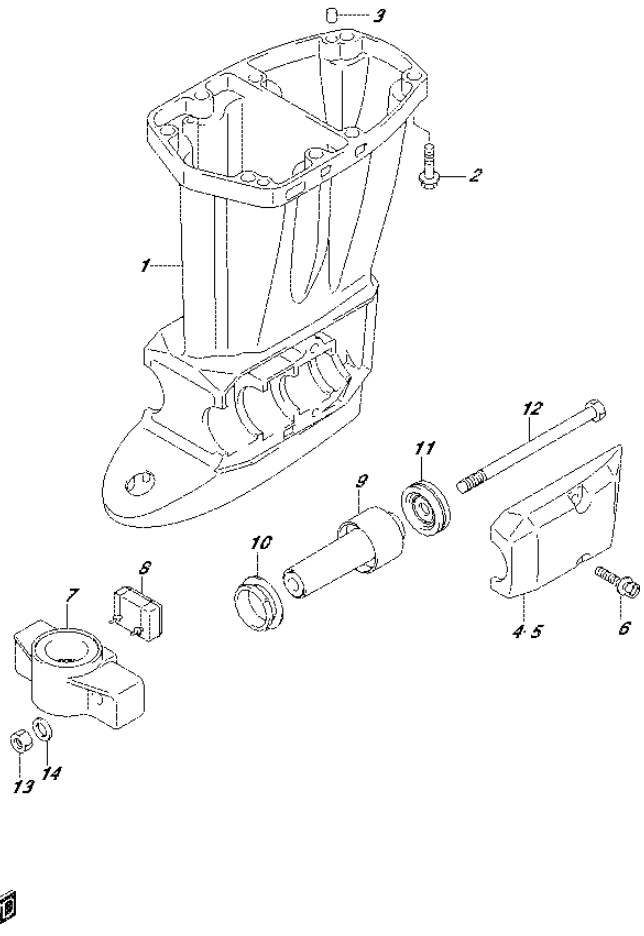

FIG.405B (3-F-10) DRIVE SHAFT HOUSING (DF40AQH E01)

REF NO.	PART NO.	DESCRIPTION	Q'TY	REMARKS
1	52111-88L10-0EP	HOUSING, DRIVE SHAFT (L) (BLACK)	1	
2	09116-10176	BOLT (10X44)	8	
3	09202-08006	PIN (8X12)	2	
4	54221-88L20-0EP	COVER, LOWER MOUNT STBD (BLACK)	1	
5	54231-88L10-0EP	COVER, LOWER MOUNT PORT (BLACK)	1	
6	09116-10176	BOLT (10X44)	4	
7	54211-87J30-0EP	BRACKET, LOWER MOUNT (BLACK)	1	
8	54151-88L00	MOUNT, LOWER THRUST	1	
9	54160-88L10	MOUNT, LOWER	2	
10	54167-87L01	MOUNT, LOWER SIDE	2	
11	54180-88L00	DAMPER, FWD STOPPER	2	
12	54166-95J02	BOLT, LOWER MOUNT	2	
13	09159-12014	NUT	2	
14	54114-90J01	WASHER, LOWER MOUNT NUT (12.5X22X3)	2	

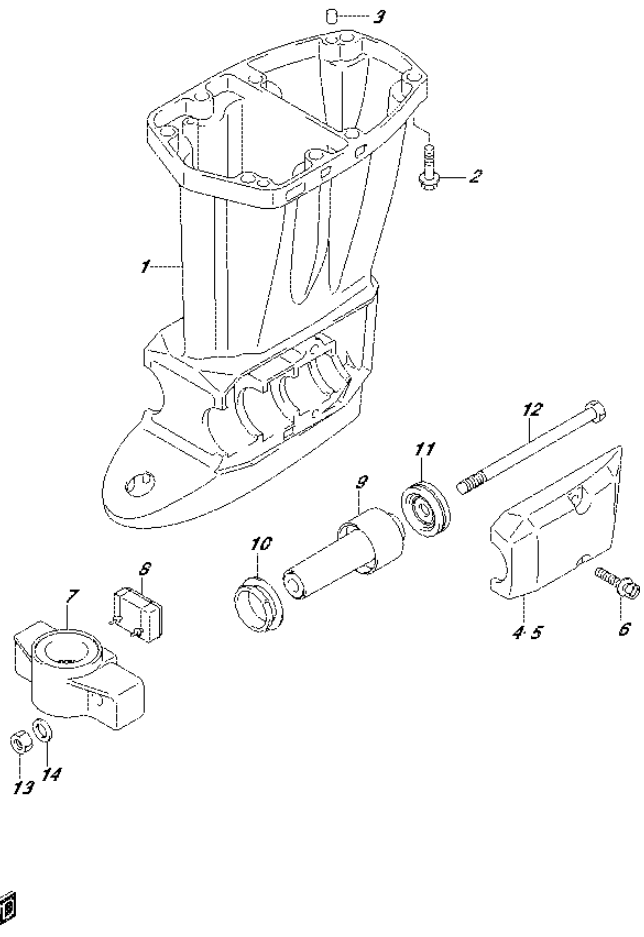

FIG.405C (3-F-11) DRIVE SHAFT HOUSING (DF40ATH E01)

REF NO.	PART NO.	DESCRIPTION	Q'TY	REMARKS
1	52111-88L10-0EP	HOUSING, DRIVE SHAFT (L) (BLACK)	1	
2	09116-10176	BOLT (10X44)	8	
3	09202-08006	PIN (8X12)	2	
4	54221-88L20-0EP	COVER, LOWER MOUNT STBD (BLACK)	1	
5	54231-88L10-0EP	COVER, LOWER MOUNT PORT (BLACK)	1	
6	09116-10176	BOLT (10X44)	4	
7	54211-87J30-0EP	BRACKET, LOWER MOUNT (BLACK)	1	
8	54151-88L00	MOUNT, LOWER THRUST	1	
9	54160-88L10	MOUNT, LOWER	2	
10	54167-87L01	MOUNT, LOWER SIDE	2	
11	54180-88L00	DAMPER, FWD STOPPER	2	
12	54166-95J02	BOLT, LOWER MOUNT	2	
13	09159-12014	NUT	2	
14	54114-90J01	WASHER, LOWER MOUNT NUT (12.5X22X3)	2	

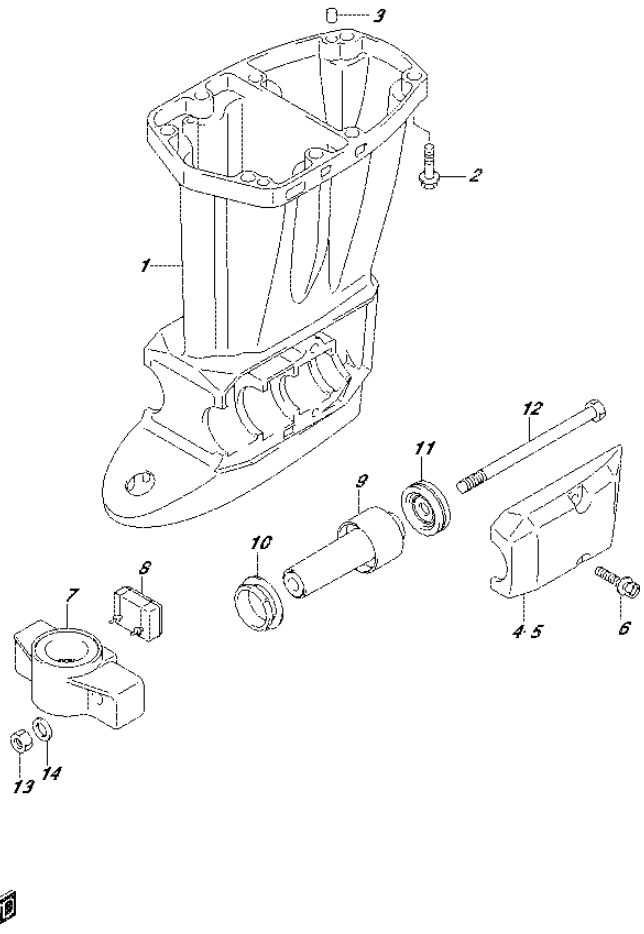

FIG.405D (3-F-12) DRIVE SHAFT HOUSING (DF40AST E34)

REF NO.	PART NO.	DESCRIPTION	Q'TY	REMARKS
1-1	52111-88L00-0EP	HOUSING, DRIVE SHAFT (S) (BLACK)	1	W/TRANSOM(S)
1-2	52111-88L00-Y5S	HOUSING, DRIVE SHAFT (S) (WHITE)	1	W/TRANSOM(S)
1-3	52111-88L10-0EP	HOUSING, DRIVE SHAFT (L) (BLACK)	1	W/TRANSOM(L)
1-4	52111-88L10-Y5S	HOUSING, DRIVE SHAFT (L) (WHITE)	1	W/TRANSOM(L)
2	09116-10176	BOLT (10X44)	8	
3	09202-08006	PIN (8X12)	2	
4-1	54221-88L20-0EP	COVER, LOWER MOUNT STBD (BLACK)	1	
4-2	54221-88L20-Y5S	COVER, LOWER MOUNT STBD (WHITE)	1	
5-1	54231-88L10-0EP	COVER, LOWER MOUNT PORT (BLACK)	1	
5-2	54231-88L10-Y5S	COVER, LOWER MOUNT PORT (WHITE)	1	
6	09116-10176	BOLT (10X44)	4	
7-1	54211-87J30-0EP	BRACKET, LOWER MOUNT (BLACK)	1	
7-2	54211-87J30-Y5S	BRACKET, LOWER MOUNT (WHITE)	1	
8	54151-88L00	MOUNT, LOWER THRUST	1	
9	54160-88L10	MOUNT, LOWER	2	
10	54167-87L01	MOUNT, LOWER SIDE	2	
11	54180-88L00	DAMPER, FORWARD STOPPER	2	
12	54166-95J02	BOLT, LOWER MOUNT	2	
13	09159-12014	NUT	2	
14	54114-90J01	WASHER, LOWER MOUNT NUT (12.5X22X3)	2	

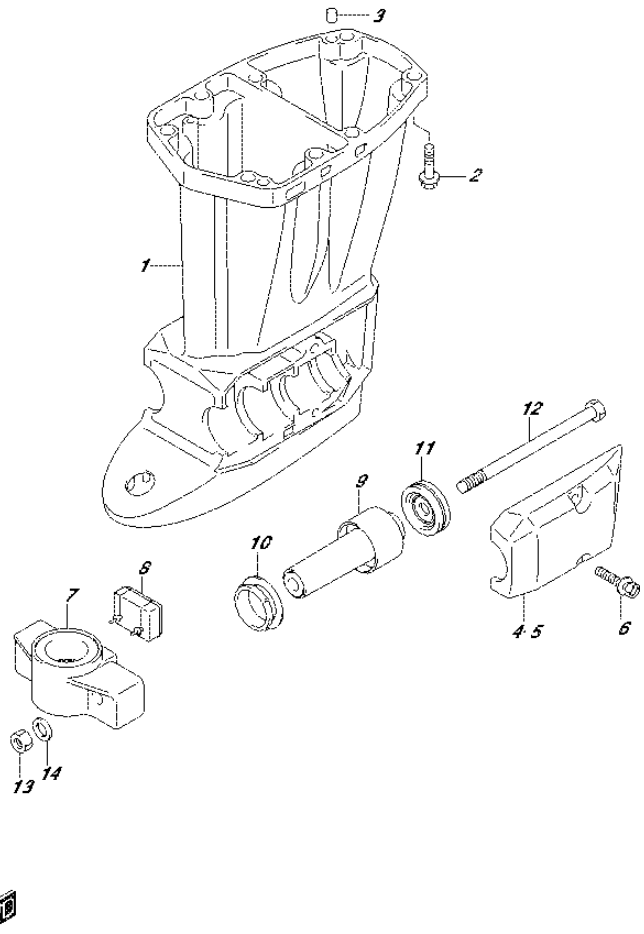

FIG.405E (3-F-13) DRIVE SHAFT HOUSING (DF50A E01)

REF NO.	PART NO.	DESCRIPTION	Q'TY	REMARKS
1-1	52111-88L00-0EP	HOUSING, DRIVE SHAFT (S) (BLACK)	1	W/TRANSOM(S)
1-2	52111-88L00-Y5S	HOUSING, DRIVE SHAFT (S) (WHITE)	1	W/TRANSOM(S)
1-3	52111-88L10-0EP	HOUSING, DRIVE SHAFT (L) (BLACK)	1	W/TRANSOM(L)
1-4	52111-88L10-Y5S	HOUSING, DRIVE SHAFT (L) (WHITE)	1	W/TRANSOM(L)
2	09116-10176	BOLT (10X44)	8	
3	09202-08006	PIN (8X12)	2	
4-1	54221-88L20-0EP	COVER, LOWER MOUNT STBD (BLACK)	1	
4-2	54221-88L20-Y5S	COVER, LOWER MOUNT STBD (WHITE)	1	
5-1	54231-88L10-0EP	COVER, LOWER MOUNT PORT (BLACK)	1	
5-2	54231-88L10-Y5S	COVER, LOWER MOUNT PORT (WHITE)	1	
6	09116-10176	BOLT (10X44)	4	
7-1	54211-87J30-0EP	BRACKET, LOWER MOUNT (BLACK)	1	
7-2	54211-87J30-Y5S	BRACKET, LOWER MOUNT (WHITE)	1	
8	54151-88L00	MOUNT, LOWER THRUST	1	
9	54160-88L10	MOUNT, LOWER	2	
10	54167-87L01	MOUNT, LOWER SIDE	2	
11	54180-88L00	DAMPER, FORWARD STOPPER	2	
12	54166-95J02	BOLT, LOWER MOUNT	2	
13	09159-12014	NUT	2	
14	54114-90J01	WASHER, LOWER MOUNT NUT (12.5X22X3)	2	

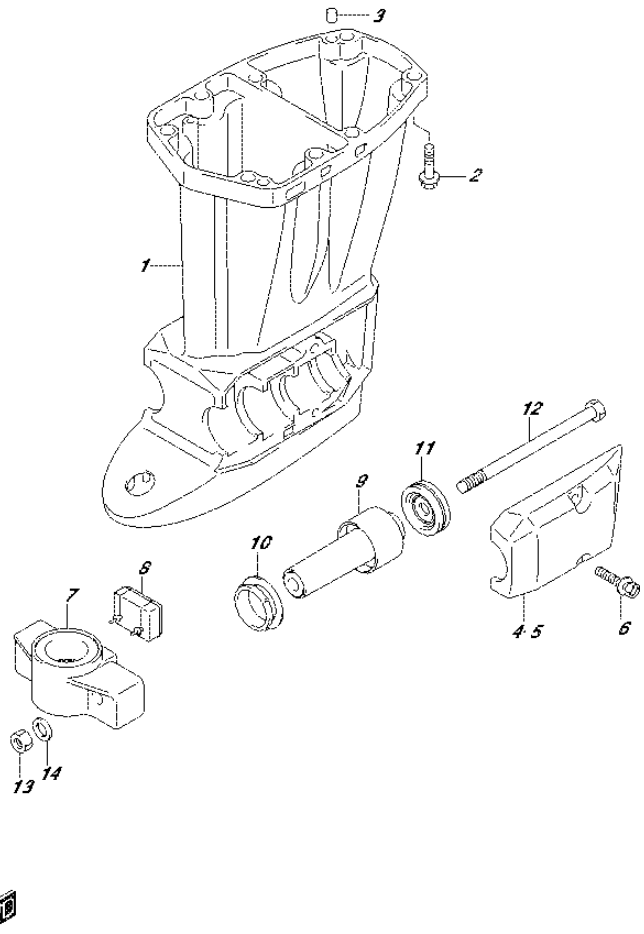

FIG.405F (3-F-14) DRIVE SHAFT HOUSING (DF50ATH E01)

REF NO.	PART NO.	DESCRIPTION	Q'TY	REMARKS
1	52111-88L10-0EP	HOUSING, DRIVE SHAFT (L) (BLACK)	1	
2	09116-10176	BOLT (10X44)	8	
3	09202-08006	PIN (8X12)	2	
4	54221-88L20-0EP	COVER, LOWER MOUNT STBD (BLACK)	1	
5	54231-88L10-0EP	COVER, LOWER MOUNT PORT (BLACK)	1	
6	09116-10176	BOLT (10X44)	4	
7	54211-87J30-0EP	BRACKET, LOWER MOUNT (BLACK)	1	
8	54151-88L00	MOUNT, LOWER THRUST	1	
9	54160-88L10	MOUNT, LOWER	2	
10	54167-87L01	MOUNT, LOWER SIDE	2	
11	54180-88L00	DAMPER, FWD STOPPER	2	
12	54166-95J02	BOLT, LOWER MOUNT	2	
13	09159-12014	NUT	2	
14	54114-90J01	WASHER, LOWER MOUNT NUT (12.5X22X3)	2	

FIG.405G

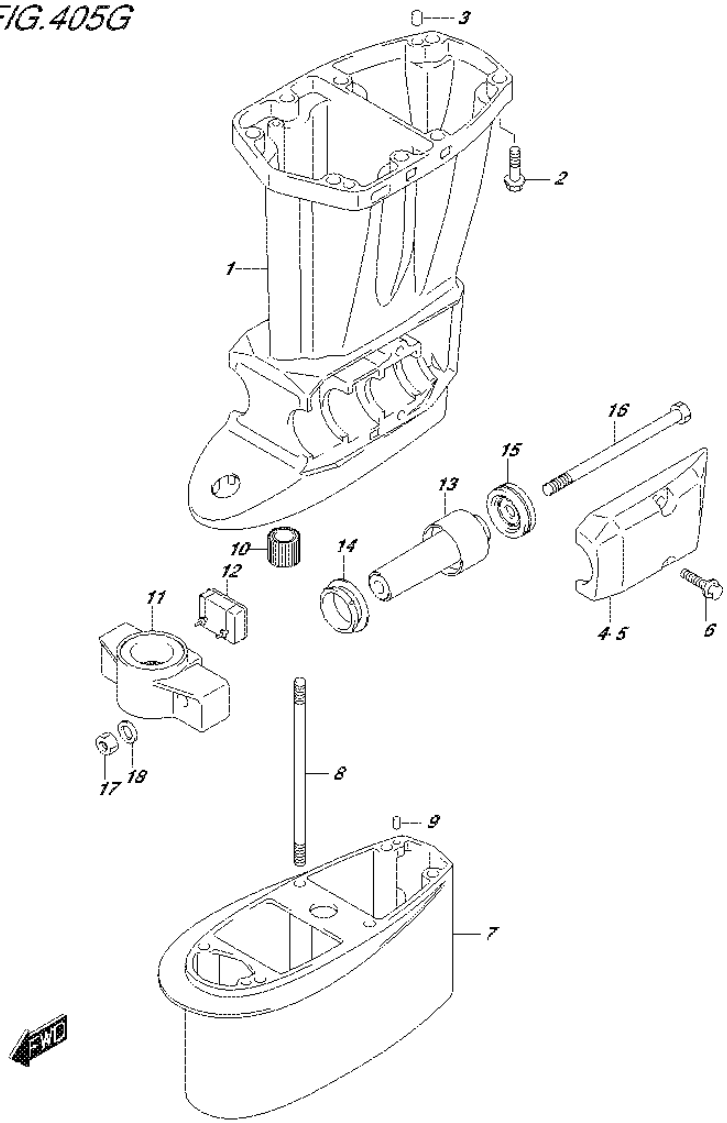

FIG.405G (3-F-15) DRIVE SHAFT HOUSING (DF60A E01)

REF NO.	PART NO.	DESCRIPTION	Q'TY	REMARKS
1-1	52111-88L00-0EP	HOUSING, DRIVE SHAFT (S) (BLACK)	1	W/TRANSOM(S)
1-2	52111-88L00-Y5S	HOUSING, DRIVE SHAFT (S) (WHITE)	1	W/TRANSOM(S)
1-3	52111-88L10-0EP	HOUSING, DRIVE SHAFT (L) (BLACK)	1	W/TRANSOM(L) W/TRANSOM(X)
1-4	52111-88L10-Y5S	HOUSING, DRIVE SHAFT (L) (WHITE)	1	W/TRANSOM(L) W/TRANSOM(X)
2	09116-10176	BOLT (10X44)	8	
3	09202-08006	PIN (8X12)	2	
4-1	54221-88L20-0EP	COVER, LOWER MOUNT STBD (BLACK)	1	
4-2	54221-88L20-Y5S	COVER, LOWER MOUNT STBD (WHITE)	1	
5-1	54231-88L10-0EP	COVER, LOWER MOUNT PORT (BLACK)	1	
5-2	54231-88L10-Y5S	COVER, LOWER MOUNT PORT (WHITE)	1	
6	09116-10176	BOLT (10X44)	4	
7-1	52131-88L00-0EP	CASE, EXTENSION (BLACK)	1	W/TRANSOM(X)
7-2	52131-88L00-Y5S	CASE, EXTENSION (WHITE)	1	W/TRANSOM(X)
8	09108-08254	STUD BOLT	6	W/TRANSOM(X)
9	09202-06023	PIN (6X10)	2	W/TRANSOM(X)
10	57130-94301	BUSH, DRIVE SHAFT	1	W/TRANSOM(X)
11-1	54211-87J30-0EP	BRACKET, LOWER MOUNT (BLACK)	1	
11-2	54211-87J30-Y5S	BRACKET, LOWER MOUNT (WHITE)	1	
12	54151-88L00	MOUNT, LOWER THRUST	1	
13	54160-88L10	MOUNT, LOWER	2	
14	54167-87L01	MOUNT, LOWER SIDE	2	
15	54180-88L00	DAMPER, FWD STOPPER	2	
16	54166-95J02	BOLT, LOWER MOUNT	2	
17	09159-12014	NUT	2	
18	54114-90J01	WASHER, LOWER MOUNT NUT (12.5X22X3)	2	

FIG.405H

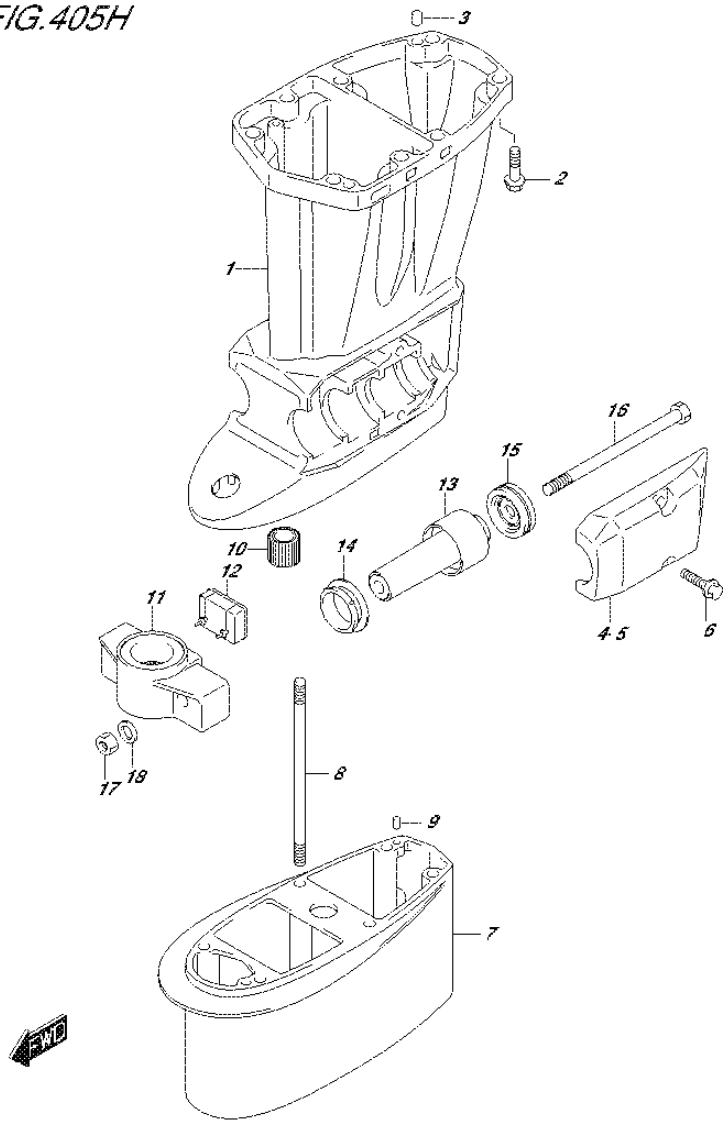

FIG.405H (3-G-2) DRIVE SHAFT HOUSING (DF60A E40)

REF NO.	PART NO.	DESCRIPTION	Q'TY	REMARKS
1-1	52111-88L10-0EP	HOUSING, DRIVE SHAFT (L) (BLACK)	1	
1-2	52111-88L10-Y5S	HOUSING, DRIVE SHAFT (L) (WHITE)	1	
2	09116-10176	BOLT (10X44)	8	
3	09202-08006	PIN (8X12)	2	
4-1	54221-88L20-0EP	COVER, LOWER MOUNT STBD (BLACK)	1	
4-2	54221-88L20-Y5S	COVER, LOWER MOUNT STBD (WHITE)	1	
5-1	54231-88L10-0EP	COVER, LOWER MOUNT PORT (BLACK)	1	
5-2	54231-88L10-Y5S	COVER, LOWER MOUNT PORT (WHITE)	1	
6	09116-10176	BOLT (10X44)	4	
7-1	52131-88L00-0EP	CASE, EXTENSION (BLACK)	1	W/TRANSOM(X)
7-2	52131-88L00-Y5S	CASE, EXTENSION (WHITE)	1	W/TRANSOM(X)
8	09108-08254	STUD BOLT	6	W/TRANSOM(X)
9	09202-06023	PIN (6X10)	2	W/TRANSOM(X)
10	57130-94301	BUSH, DRIVE SHAFT	1	W/TRANSOM(X)
11-1	54211-87J30-0EP	BRACKET, LOWER MOUNT (BLACK)	1	
11-2	54211-87J30-Y5S	BRACKET, LOWER MOUNT (WHITE)	1	
12	54151-88L00	MOUNT, LOWER THRUST	1	
13	54160-88L10	MOUNT, LOWER	2	
14	54167-87L01	MOUNT, LOWER SIDE	2	
15	54180-88L00	DAMPER, FWD STOPPER	2	
16	54166-95J02	BOLT, LOWER MOUNT	2	
17	09159-12014	NUT	2	
18	54114-90J01	WASHER, LOWER MOUNT NUT (12.5X22X3)	2	

FIG.405J

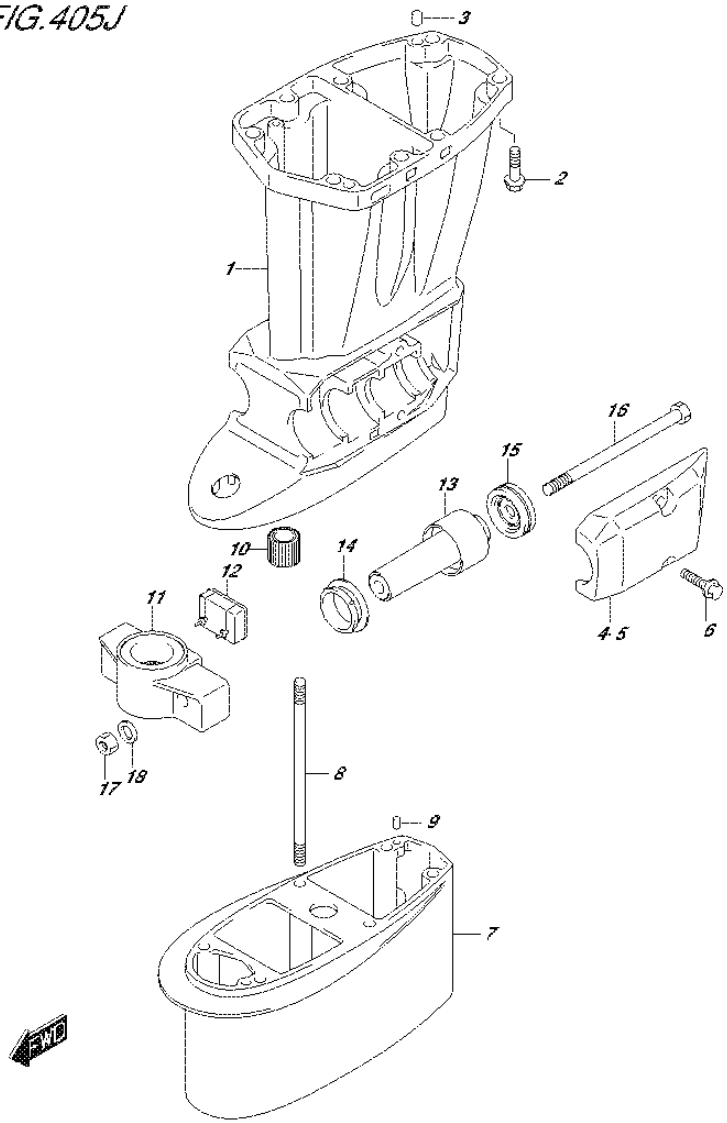

FIG.405J (3-G-3) DRIVE SHAFT HOUSING (DF60AQH E01)

REF NO.	PART NO.	DESCRIPTION	Q'TY	REMARKS
1	52111-88L10-0EP	HOUSING, DRIVE SHAFT (L) (BLACK)	1	
2	09116-10176	BOLT (10X44)	8	
3	09202-08006	PIN (8X12)	2	
4	54221-88L20-0EP	COVER, LOWER MOUNT STBD (BLACK)	1	
5	54231-88L10-0EP	COVER, LOWER MOUNT PORT (BLACK)	1	
6	09116-10176	BOLT (10X44)	4	
7	52131-88L00-0EP	CASE, EXTENSION (BLACK)	1	W/TRANSOM(X)
8	09108-08254	STUD BOLT	6	W/TRANSOM(X)
9	09202-06023	PIN (6X10)	2	W/TRANSOM(X)
10	57130-94301	BUSH, DRIVE SHAFT	1	W/TRANSOM(X)
11	54211-87J30-0EP	BRACKET, LOWER MOUNT (BLACK)	1	
12	54151-88L00	MOUNT, LOWER THRUST	1	
13	54160-88L10	MOUNT, LOWER	2	
14	54167-87L01	MOUNT, LOWER SIDE	2	
15	54180-88L00	DAMPER, FWD STOPPER	2	
16	54166-95J02	BOLT, LOWER MOUNT	2	
17	09159-12014	NUT	2	
18	54114-90J01	WASHER, LOWER MOUNT NUT (12.5X22X3)	2	

FIG.405K

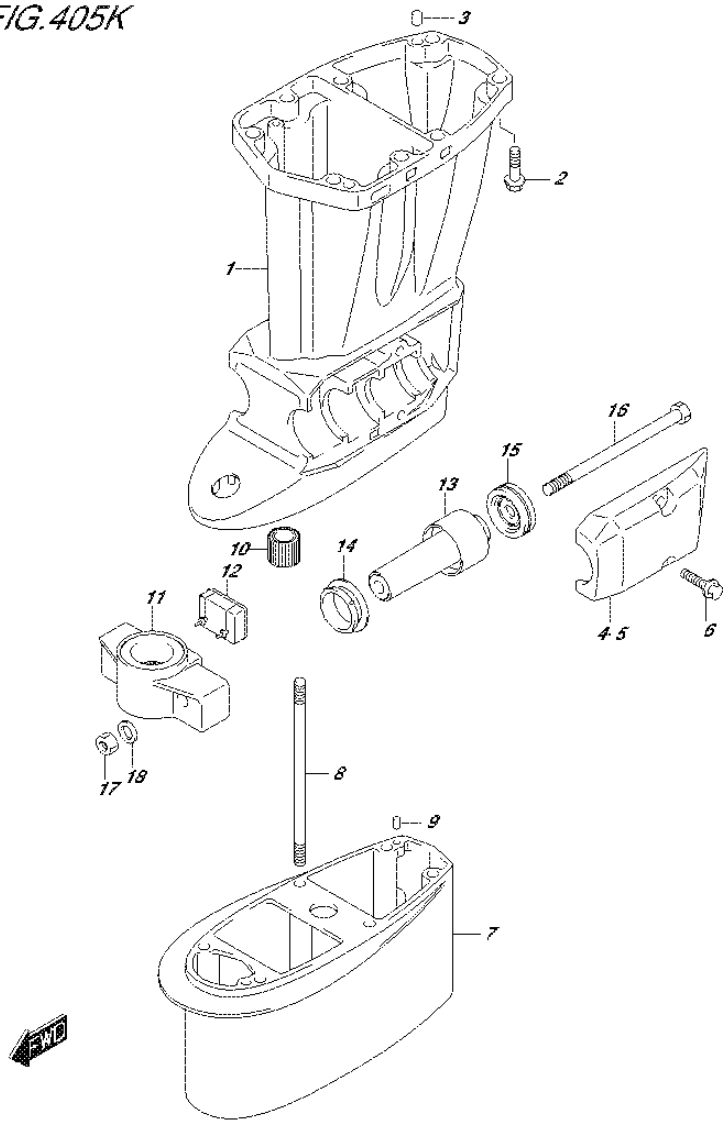

FIG.405K (3-G-4) DRIVE SHAFT HOUSING (DF60AQH E40)

REF NO.	PART NO.	DESCRIPTION	Q'TY	REMARKS
1	52111-88L10-0EP	HOUSING, DRIVE SHAFT (L) (BLACK)	1	
2	09116-10176	BOLT (10X44)	8	
3	09202-08006	PIN (8X12)	2	
4	54221-88L20-0EP	COVER, LOWER MOUNT STBD (BLACK)	1	
5	54231-88L10-0EP	COVER, LOWER MOUNT PORT (BLACK)	1	
6	09116-10176	BOLT (10X44)	4	
7	52131-88L00-0EP	CASE, EXTENSION (BLACK)	1	W/TRANSOM(X)
8	09108-08254	STUD BOLT	6	W/TRANSOM(X)
9	09202-06023	PIN (6X10)	2	W/TRANSOM(X)
10	57130-94301	BUSH, DRIVE SHAFT	1	W/TRANSOM(X)
11	54211-87J30-0EP	BRACKET, LOWER MOUNT (BLACK)	1	
12	54151-88L00	MOUNT, LOWER THRUST	1	
13	54160-88L10	MOUNT, LOWER	2	
14	54167-87L01	MOUNT, LOWER SIDE	2	
15	54180-88L00	DAMPER, FWD STOPPER	2	
16	54166-95J02	BOLT, LOWER MOUNT	2	
17	09159-12014	NUT	2	
18	54114-90J01	WASHER, LOWER MOUNT NUT (12.5X22X3)	2	

FIG.405L

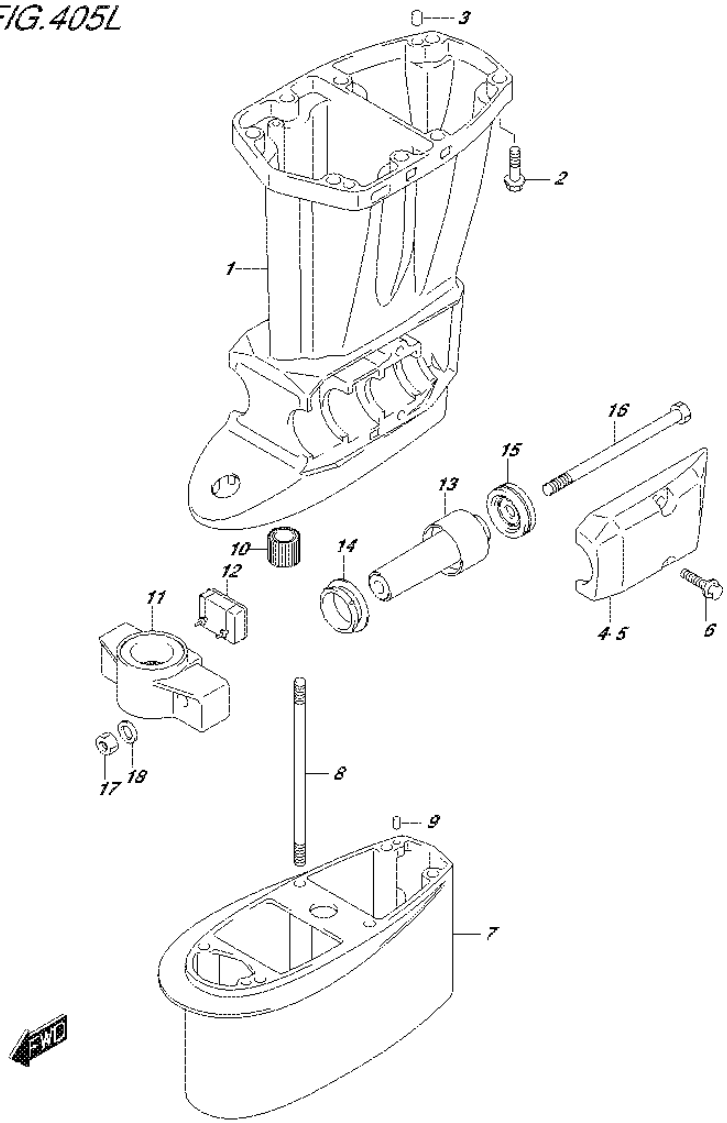

FIG.405L (3-G-5) DRIVE SHAFT HOUSING (DF60ATH E01)

REF NO.	PART NO.	DESCRIPTION	Q'TY	REMARKS
1	52111-88L10-0EP	HOUSING, DRIVE SHAFT (L) (BLACK)	1	
2	09116-10176	BOLT (10X44)	8	
3	09202-08006	PIN (8X12)	2	
4	54221-88L20-0EP	COVER, LOWER MOUNT STBD (BLACK)	1	
5	54231-88L10-0EP	COVER, LOWER MOUNT PORT (BLACK)	1	
6	09116-10176	BOLT (10X44)	4	
7	52131-88L00-0EP	CASE, EXTENSION (BLACK)	1	W/TRANSOM(X)
8	09108-08254	STUD BOLT	6	W/TRANSOM(X)
9	09202-06023	PIN (6X10)	2	W/TRANSOM(X)
10	57130-94301	BUSH, DRIVE SHAFT	1	W/TRANSOM(X)
11	54211-87J30-0EP	BRACKET, LOWER MOUNT (BLACK)	1	
12	54151-88L00	MOUNT, LOWER THRUST	1	
13	54160-88L10	MOUNT, LOWER	2	
14	54167-87L01	MOUNT, LOWER SIDE	2	
15	54180-88L00	DAMPER, FWD STOPPER	2	
16	54166-95J02	BOLT, LOWER MOUNT	2	
17	09159-12014	NUT	2	
18	54114-90J01	WASHER, LOWER MOUNT NUT (12.5X22X3)	2	

FIG.405M

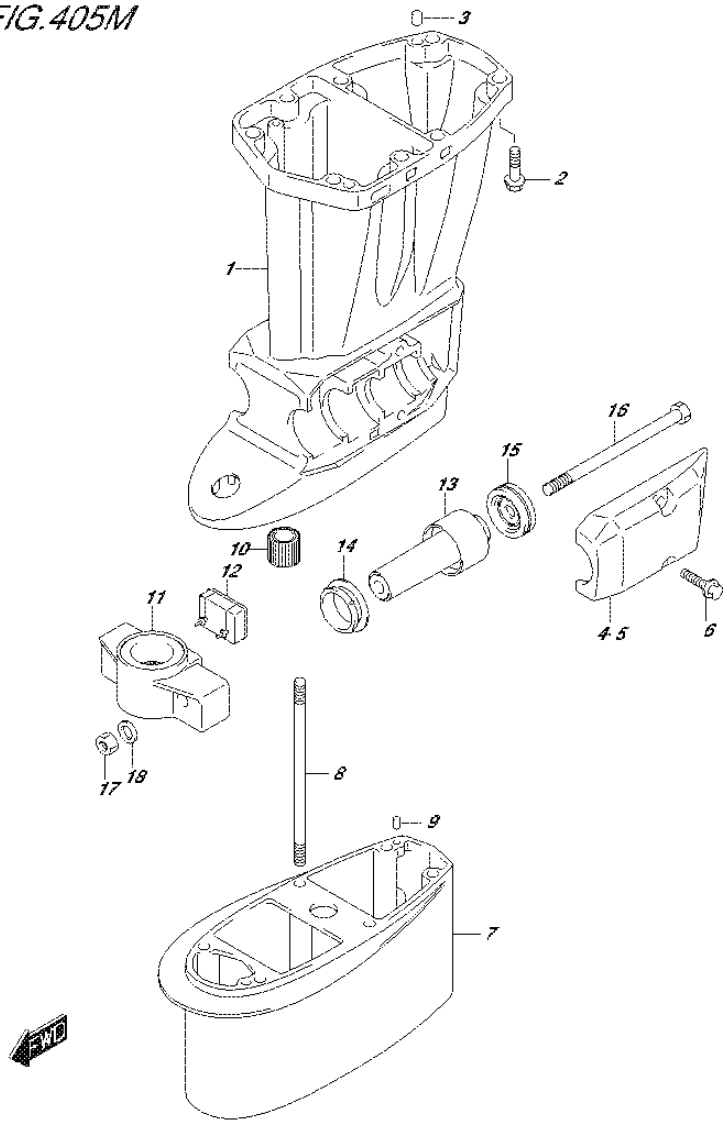

FIG.405M (3-G-6) DRIVE SHAFT HOUSING (DF60ATH E40)

REF NO.	PART NO.	DESCRIPTION	Q'TY	REMARKS
1	52111-88L10-0EP	HOUSING, DRIVE SHAFT (L) (BLACK)	1	
2	09116-10176	BOLT (10X44)	8	
3	09202-08006	PIN (8X12)	2	
4	54221-88L20-0EP	COVER, LOWER MOUNT STBD (BLACK)	1	
5	54231-88L10-0EP	COVER, LOWER MOUNT PORT (BLACK)	1	
6	09116-10176	BOLT (10X44)	4	
7	52131-88L00-0EP	CASE, EXTENSION (BLACK)	1	W/TRANSOM(X)
8	09108-08254	STUD BOLT	6	W/TRANSOM(X)
9	09202-06023	PIN (6X10)	2	W/TRANSOM(X)
10	57130-94301	BUSH, DRIVE SHAFT	1	W/TRANSOM(X)
11	54211-87J30-0EP	BRACKET, LOWER MOUNT (BLACK)	1	
12	54151-88L00	MOUNT, LOWER THRUST	1	
13	54160-88L10	MOUNT, LOWER	2	
14	54167-87L01	MOUNT, LOWER SIDE	2	
15	54180-88L00	DAMPER, FWD STOPPER	2	
16	54166-95J02	BOLT, LOWER MOUNT	2	
17	09159-12014	NUT	2	
18	54114-90J01	WASHER, LOWER MOUNT NUT (12.5X22X3)	2	

FIG.405N

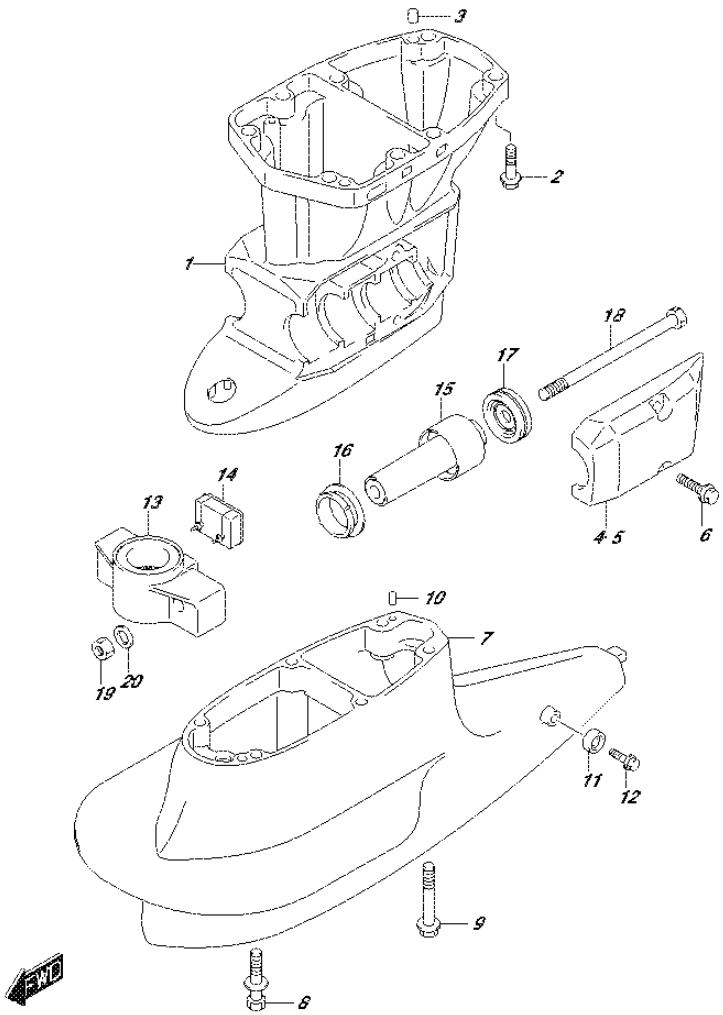

FIG.405N (3-G-7) DRIVE SHAFT HOUSING (DF50AVT E01)

REF NO.	PART NO.	DESCRIPTION	Q'TY	REMARKS
1	52111-88L20-0EP	HOUSING, DRIVE SHAFT (S) (BLACK)	1	
2	09116-10176	BOLT (10X44)	8	
3	09202-08006	PIN (8X12)	2	
4	54221-88L20-0EP	COVER, LOWER MOUNT STBD (BLACK)	1	
5	54231-88L10-0EP	COVER, LOWER MOUNT PORT (BLACK)	1	
6	09116-10176	BOLT (10X44)	4	
7	52131-88L11-0EP	CASE, EXTENSION (BLACK)	1	
8	09116-08131	BOLT (8X45)	4	
9	09116-10150	BOLT (10X55)	2	
10	09202-06031	PIN (6X12)	2	
11	55321-87J00	ANODE, PROTECTION	1	
12	09103-06281	BOLT (6X14)	1	
13	54211-87J30-0EP	BRACKET, LOWER MOUNT (BLACK)	1	
14	54151-88L00	MOUNT, LOWER THRUST	1	
15	54160-88L10	MOUNT, LOWER	2	
16	54167-87L01	MOUNT, LOWER SIDE	2	
17	54180-88L00	DAMPER, FWD STOPPER	2	
18	54166-95J02	BOLT, LOWER MOUNT	2	
19	09159-12014	NUT	2	
20	54114-90J01	WASHER, LOWER MOUNT NUT (12.5X22X3)	2	

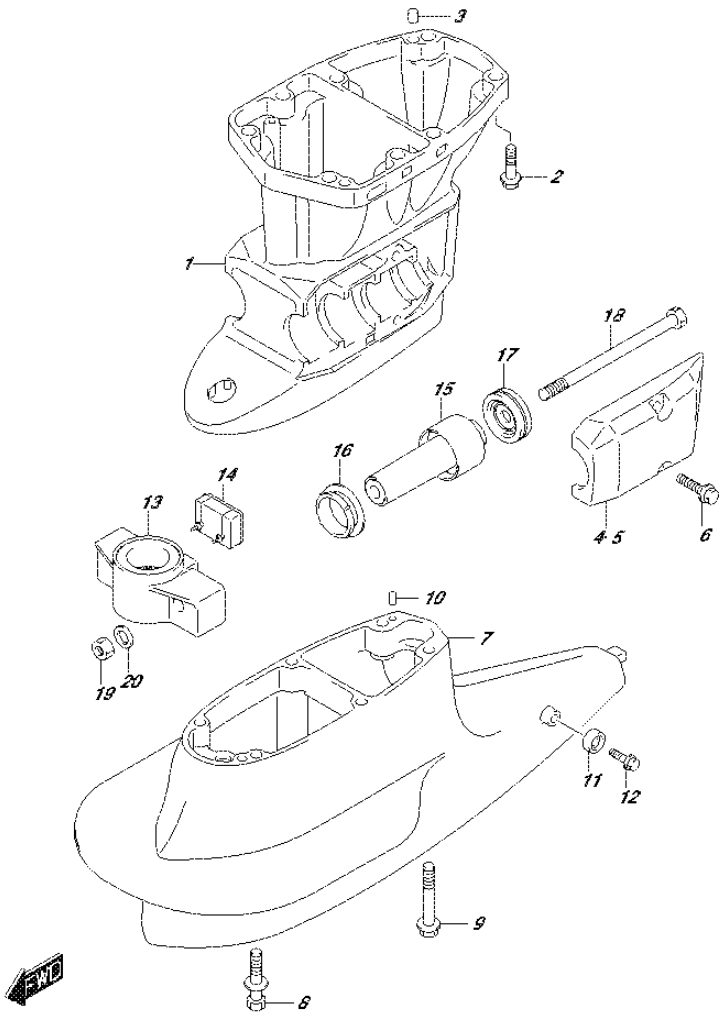

FIG.405P (3-G-8) DRIVE SHAFT HOUSING (DF50AVTH E01)

REF NO.	PART NO.	DESCRIPTION	Q'TY	REMARKS
1	52111-88L20-0EP	HOUSING, DRIVE SHAFT (S) (BLACK)	1	
2	09116-10176	BOLT (10X44)	8	
3	09202-08006	PIN (8X12)	2	
4	54221-88L20-0EP	COVER, LOWER MOUNT STBD (BLACK)	1	
5	54231-88L10-0EP	COVER, LOWER MOUNT PORT (BLACK)	1	
6	09116-10176	BOLT (10X44)	4	
7	52131-88L11-0EP	CASE, EXTENSION (BLACK)	1	
8	09116-08131	BOLT (8X45)	4	
9	09116-10150	BOLT (10X55)	2	
10	09202-06031	PIN (6X12)	2	
11	55321-87J00	ANODE, PROTECTION	1	
12	09103-06281	BOLT (6X14)	1	
13	54211-87J30-0EP	BRACKET, LOWER MOUNT (BLACK)	1	
14	54151-88L00	MOUNT, LOWER THRUST	1	
15	54160-88L10	MOUNT, LOWER	2	
16	54167-87L01	MOUNT, LOWER SIDE	2	
17	54180-88L00	DAMPER, FWD STOPPER	2	
18	54166-95J02	BOLT, LOWER MOUNT	2	
19	09159-12014	NUT	2	
20	54114-90J01	WASHER, LOWER MOUNT NUT (12.5X22X3)	2	

FIG.405R

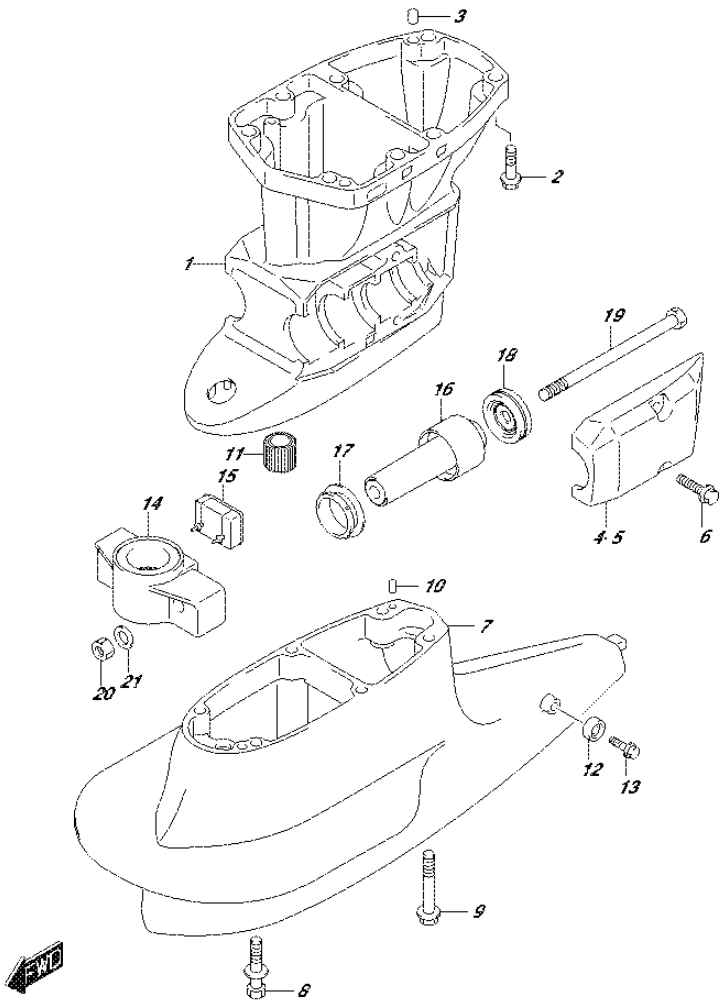

FIG.405R (3-G-9) DRIVE SHAFT HOUSING (DF60AVT E01)

REF NO.	PART NO.	DESCRIPTION	Q'TY	REMARKS
1-1	52111-88L20-0EP	HOUSING, DRIVE SHAFT (S) (BLACK)	1	W/TRANSOM(L)
1-2	52111-88L30-0EP	HOUSING, DRIVE SHAFT (L) (BLACK)	1	W/TRANSOM(X)
2	09116-10176	BOLT (10X44)	8	
3	09202-08006	PIN (8X12)	2	
4	54221-88L20-0EP	COVER, LOWER MOUNT STBD (BLACK)	1	
5	54231-88L10-0EP	COVER, LOWER MOUNT PORT (BLACK)	1	
6	09116-10176	BOLT (10X44)	4	
7	52131-88L11-0EP	CASE, EXTENSION (BLACK)	1	
8	09116-08131	BOLT (8X45)	4	
9	09116-10150	BOLT (10X55)	2	
10	09202-06031	PIN (6X12)	2	
11	57130-94301	BUSH, DRIVE SHAFT	1	W/TRANSOM(X)
12	55321-87J00	ANODE, PROTECTION	1	
13	09103-06281	BOLT (6X14)	1	
14	54211-87J30-0EP	BRACKET, LOWER MOUNT (BLACK)	1	
15	54151-88L00	MOUNT, LOWER THRUST	1	
16	54160-88L10	MOUNT, LOWER	2	
17	54167-87L01	MOUNT, LOWER SIDE	2	
18	54180-88L00	DAMPER, FWD STOPPER	2	
19	54166-95J02	BOLT, LOWER MOUNT	2	
20	09159-12014	NUT	2	
21	54114-90J01	WASHER, LOWER MOUNT NUT (12.5X22X3)	2	

FIG.405S

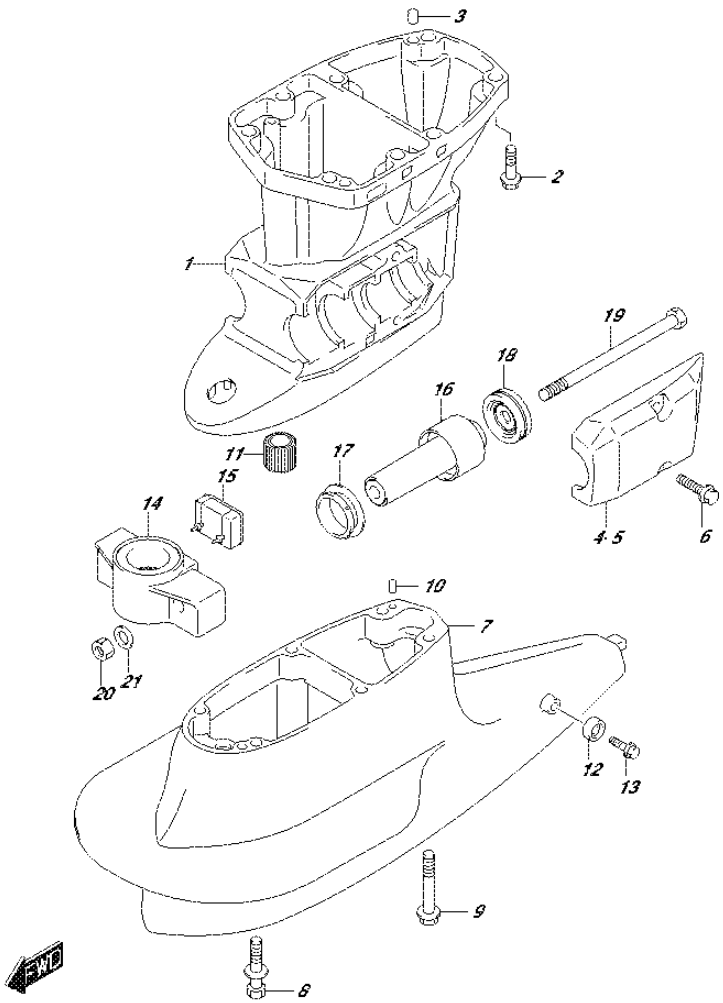

FIG.405S (3-G-10) DRIVE SHAFT HOUSING (DF60AVT E40)

REF NO.	PART NO.	DESCRIPTION	Q'TY	REMARKS
1-1	52111-88L20-0EP	HOUSING, DRIVE SHAFT (S) (BLACK)	1	W/TRANSOM(L)
1-2	52111-88L30-0EP	HOUSING, DRIVE SHAFT (L) (BLACK)	1	W/TRANSOM(X)
2	09116-10176	BOLT (10X44)	8	
3	09202-08006	PIN (8X12)	2	
4	54221-88L20-0EP	COVER, LOWER MOUNT STBD (BLACK)	1	
5	54231-88L10-0EP	COVER, LOWER MOUNT PORT (BLACK)	1	
6	09116-10176	BOLT (10X44)	4	
7	52131-88L11-0EP	CASE, EXTENSION (BLACK)	1	
8	09116-08131	BOLT (8X45)	4	
9	09116-10150	BOLT (10X55)	2	
10	09202-06031	PIN (6X12)	2	
11	57130-94301	BUSH, DRIVE SHAFT	1	W/TRANSOM(X)
12	55321-87J00	ANODE, PROTECTION	1	
13	09103-06281	BOLT (6X14)	1	
14	54211-87J30-0EP	BRACKET, LOWER MOUNT (BLACK)	1	
15	54151-88L00	MOUNT, LOWER THRUST	1	
16	54160-88L10	MOUNT, LOWER	2	
17	54167-87L01	MOUNT, LOWER SIDE	2	
18	54180-88L00	DAMPER, FWD STOPPER	2	
19	54166-95J02	BOLT, LOWER MOUNT	2	
20	09159-12014	NUT	2	
21	54114-90J01	WASHER, LOWER MOUNT NUT (12.5X22X3)	2	

FIG.405T

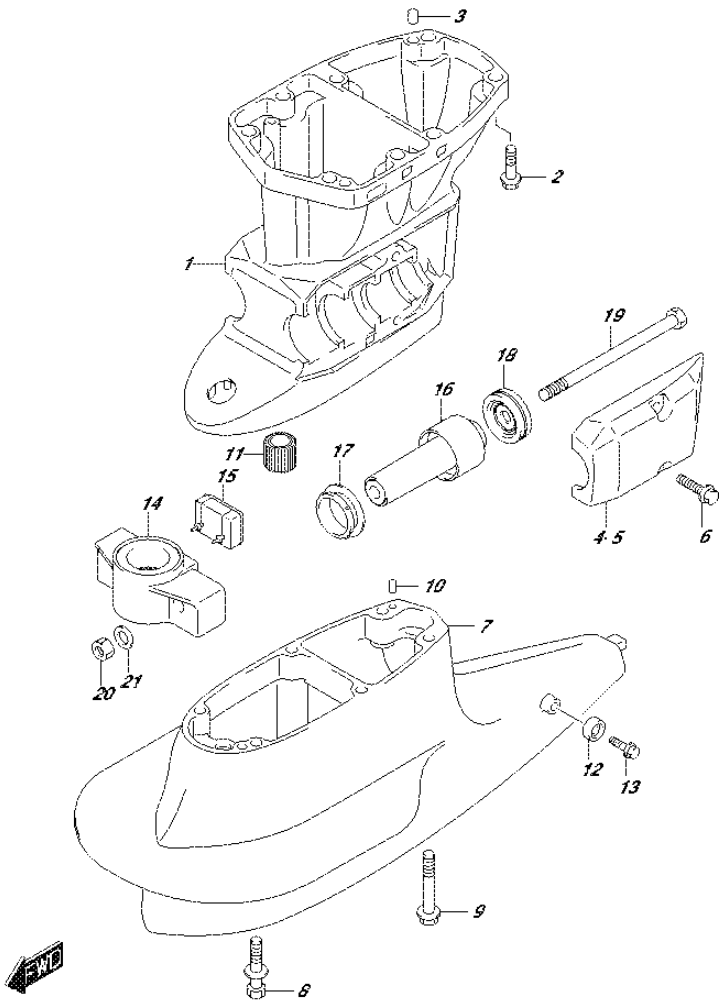

FIG.405T (3-G-11) DRIVE SHAFT HOUSING (DF60AVTH E01)

REF NO.	PART NO.	DESCRIPTION	Q'TY	REMARKS
1-1	52111-88L20-0EP	HOUSING, DRIVE SHAFT (S) (BLACK)	1	W/TRANSOM(L)
1-2	52111-88L30-0EP	HOUSING, DRIVE SHAFT (L) (BLACK)	1	W/TRANSOM(X)
2	09116-10176	BOLT (10X44)	8	
3	09202-08006	PIN (8X12)	2	
4	54221-88L20-0EP	COVER, LOWER MOUNT STBD (BLACK)	1	
5	54231-88L10-0EP	COVER, LOWER MOUNT PORT (BLACK)	1	
6	09116-10176	BOLT (10X44)	4	
7	52131-88L11-0EP	CASE, EXTENSION (BLACK)	1	
8	09116-08131	BOLT (8X45)	4	
9	09116-10150	BOLT (10X55)	2	
10	09202-06031	PIN (6X12)	2	
11	57130-94301	BUSH, DRIVE SHAFT	1	W/TRANSOM(X)
12	55321-87J00	ANODE, PROTECTION	1	
13	09103-06281	BOLT (6X14)	1	
14	54211-87J30-0EP	BRACKET, LOWER MOUNT (BLACK)	1	
15	54151-88L00	MOUNT, LOWER THRUST	1	
16	54160-88L10	MOUNT, LOWER	2	
17	54167-87L01	MOUNT, LOWER SIDE	2	
18	54180-88L00	DAMPER, FWD STOPPER	2	
19	54166-95J02	BOLT, LOWER MOUNT	2	
20	09159-12014	NUT	2	
21	54114-90J01	WASHER, LOWER MOUNT NUT (12.5X22X3)	2	

FIG.405U

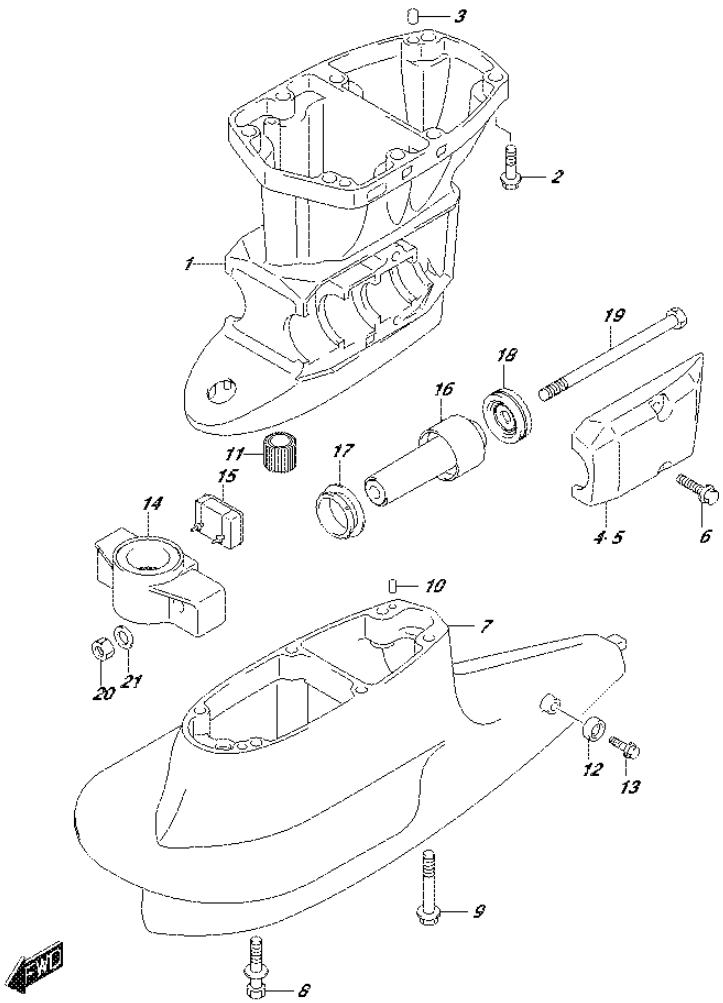

FIG.405U (3-G-12) DRIVE SHAFT HOUSING (DF60AVTH E40)

REF NO.	PART NO.	DESCRIPTION	Q'TY	REMARKS
1-1	52111-88L20-0EP	HOUSING, DRIVE SHAFT (S) (BLACK)	1	W/TRANSOM(L)
1-2	52111-88L30-0EP	HOUSING, DRIVE SHAFT (L) (BLACK)	1	W/TRANSOM(X)
2	09116-10176	BOLT (10X44)	8	
3	09202-08006	PIN (8X12)	2	
4	54221-88L20-0EP	COVER, LOWER MOUNT STBD (BLACK)	1	
5	54231-88L10-0EP	COVER, LOWER MOUNT PORT (BLACK)	1	
6	09116-10176	BOLT (10X44)	4	
7	52131-88L11-0EP	CASE, EXTENSION (BLACK)	1	
8	09116-08131	BOLT (8X45)	4	
9	09116-10150	BOLT (10X55)	2	
10	09202-06031	PIN (6X12)	2	
11	57130-94301	BUSH, DRIVE SHAFT	1	W/TRANSOM(X)
12	55321-87J00	ANODE, PROTECTION	1	
13	09103-06281	BOLT (6X14)	1	
14	54211-87J30-0EP	BRACKET, LOWER MOUNT (BLACK)	1	
15	54151-88L00	MOUNT, LOWER THRUST	1	
16	54160-88L10	MOUNT, LOWER	2	
17	54167-87L01	MOUNT, LOWER SIDE	2	
18	54180-88L00	DAMPER, FWD STOPPER	2	
19	54166-95J02	BOLT, LOWER MOUNT	2	
20	09159-12014	NUT	2	
21	54114-90J01	WASHER, LOWER MOUNT NUT (12.5X22X3)	2	

FIG.407A

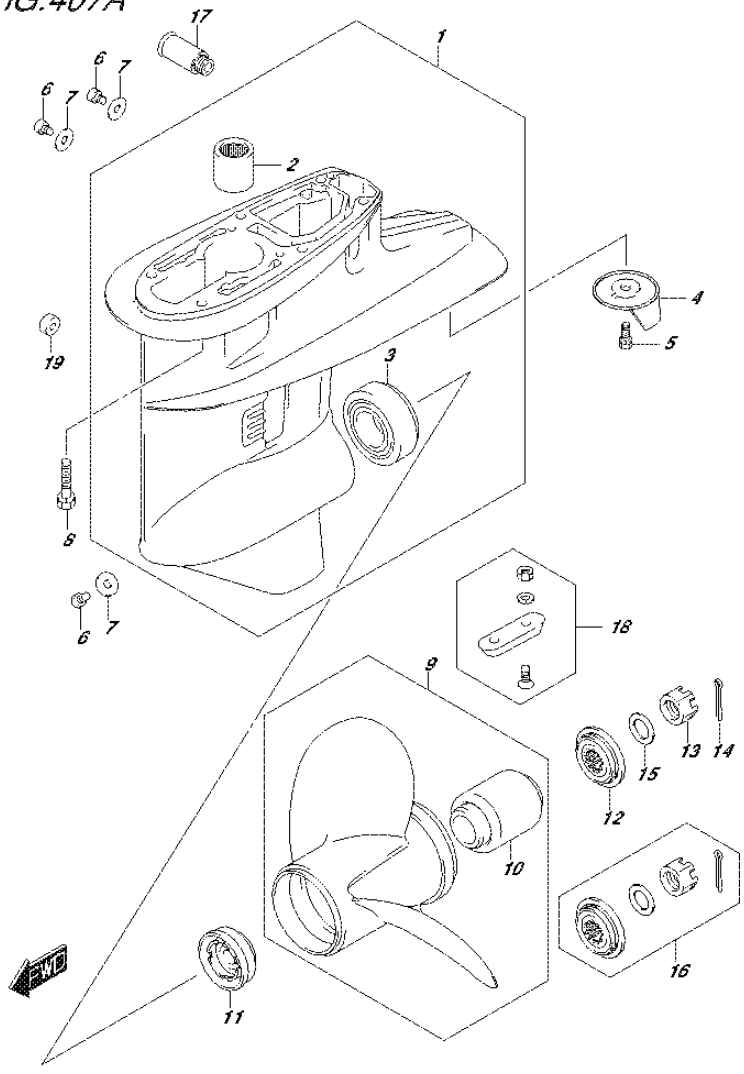

FIG.407A (3-G-13) GEAR CASE (DF40A E01)

REF NO.	PART NO.	DESCRIPTION	Q'TY	REMARKS
1-1	55100-87J50-0EP	CASE ASSY, GEAR (BLACK)	1	
1-2	55100-87J50-Y5S	CASE ASSY, GEAR (WHITE)	1	
2	09263-22039	.BEARING (22X30X30)	1	
3	09265-30004	.BEARING (30X62X17.25)	1	
4	55125-94400	TAB, TRIM	1	
5	09117-08109	BOLT (8X16)	1	
6	09248-10008	PLUG (10X7.5)	3	
7	09168-10022	GASKET (10X17X1.5)	3	
8	09116-08131	BOLT (8X45)	6	
9-1	58100-88L03-019	PROPELLER (3X11-1/2X9) (BLACK)	1	
9-2	58100-88L13-019	PROPELLER (3X11-1/2X10) (BLACK)	1	
9-3	58100-88L23-019	PROPELLER (3X11-1/2X11) (BLACK)	1	
9-4	58100-88LA0-019	PROPELLER (3X11-5/8X12) (BLACK)	1	
9-5	58100-88LB0-019	PROPELLER (3X11-1/2X13) (BLACK)	1	
9-6	58100-88L52-019	PROPELLER (3X11-3/8X14) (BLACK)	1	
9-7	58100-88L62-019	PROPELLER (3X11-1/4X15) (BLACK)	1	
9-8	58100-88L72-019	PROPELLER (3X11-1/8X16) (BLACK)	1	
9-9	58100-88L83-019	PROPELLER (3X11X17) (BLACK)	1	
9-10	58200-88L30	PROPELLER	1	OPT
10	58120-88L01	.BUSH, PROPELLER	1	
11	57632-95320	STOPPER, PROPELLER BUSH	1	
12	57633-94300	SPACER, PROPELLER NUT	1	
13	09141-18005	NUT	1	
14	09204-03003	COTTER PIN (D:3.6,L:25)	1	
15	09160-18028	WASHER (18.5X31X1)	1	

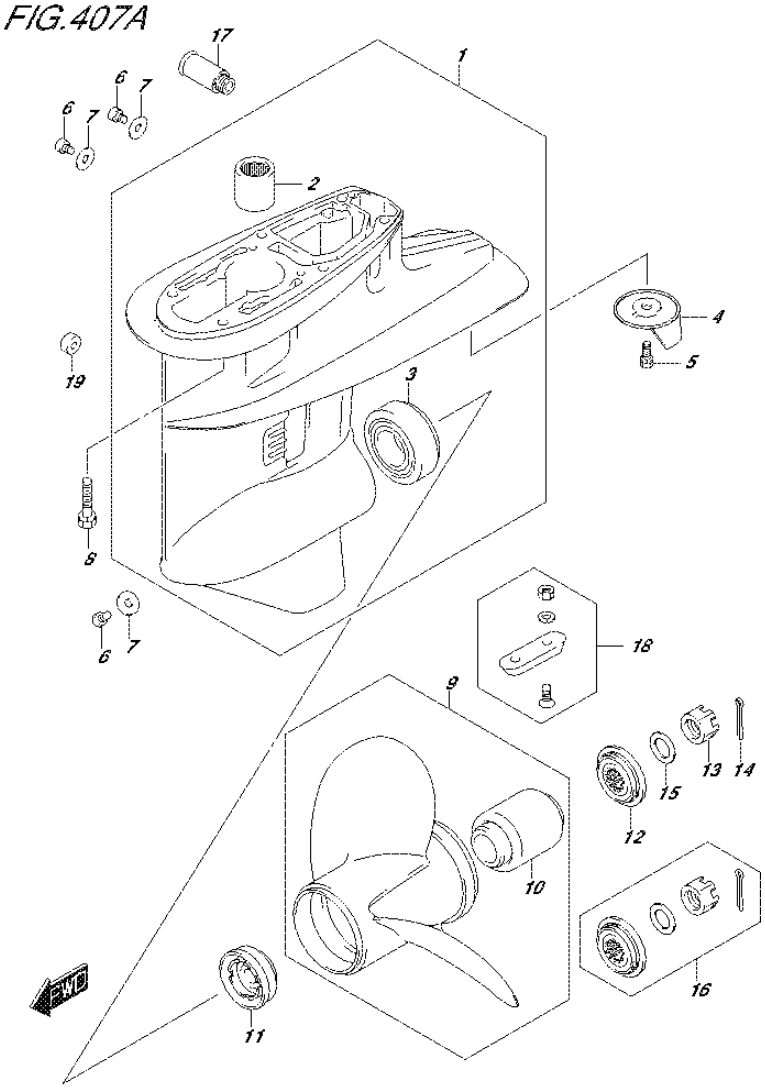

FIG.407A (3-G-14) GEAR CASE (DF40A E01)

REF NO.	PART NO.	DESCRIPTION	Q'TY	REMARKS
16	57630-94300	KIT, PROPELLER NUT	1	OPT
17	55181-95200	ATTACHMENT, FLUSH HOSE	1	OPT
18	55300-95500	ZINK ASSY, PROTECTION	1	OPT
19	55321-87J10	ANODE(MAGNESIUM)	1	OPT
20	25700-88L00	SEALING KIT, GEAR CASE	1	OPT
				NOT ILLUSTRATED

FIG.407B

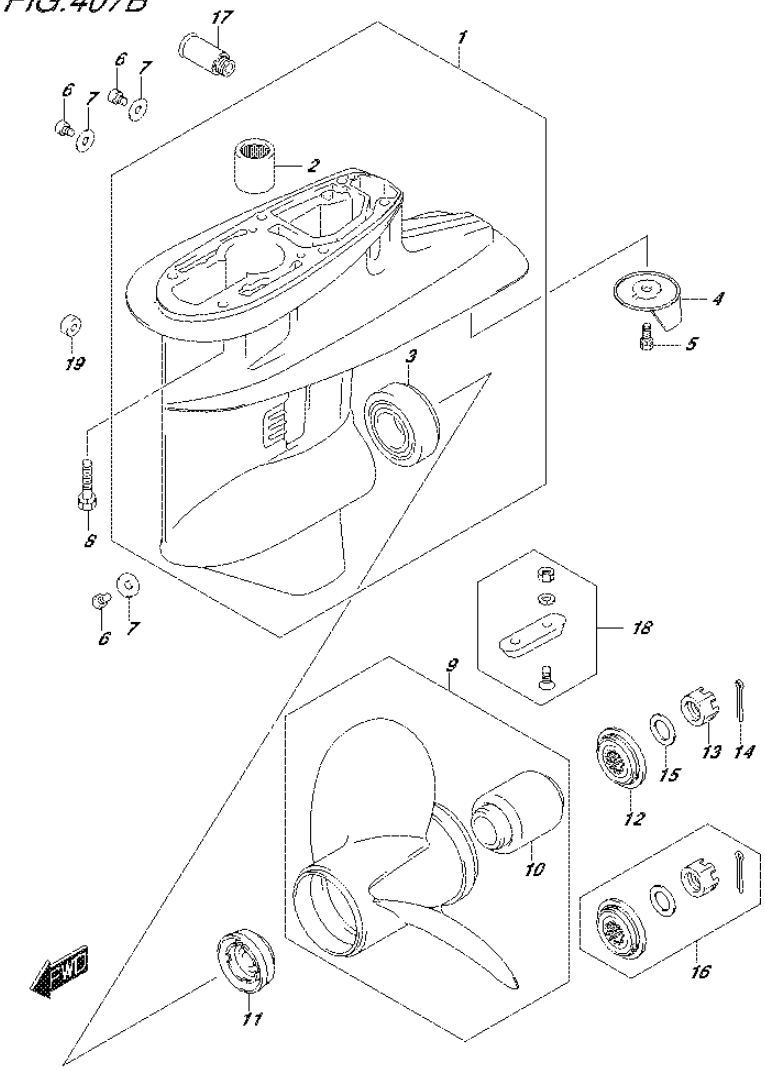

FIG.407B (3-G-15) GEAR CASE (DF40AQH E01)

REF NO.	PART NO.	DESCRIPTION	Q'TY	REMARKS
1	55100-87J50-0EP	CASE ASSY, GEAR (BLACK)	1	
2	09263-22039	.BEARING (22X30X30)	1	
3	09265-30004	.BEARING (30X62X17.25)	1	
4	55125-94400	TAB, TRIM	1	
5	09117-08109	BOLT (8X16)	1	
6	09248-10008	PLUG (10X7.5)	3	
7	09168-10022	GASKET (10X17X1.5)	3	
8	09116-08131	BOLT (8X45)	6	
9-1	58100-88L03-019	PROPELLER (3X11-1/2X9) (BLACK)	1	
9-2	58100-88L13-019	PROPELLER (3X11-1/2X10) (BLACK)	1	
9-3	58100-88L23-019	PROPELLER (3X11-1/2X11) (BLACK)	1	
9-4	58100-88LA0-019	PROPELLER (3X11-5/8X12) (BLACK)	1	
9-5	58100-88LB0-019	PROPELLER (3X11-1/2X13) (BLACK)	1	
9-6	58100-88L52-019	PROPELLER (3X11-3/8X14) (BLACK)	1	
9-7	58100-88L62-019	PROPELLER (3X11-1/4X15) (BLACK)	1	
9-8	58100-88L72-019	PROPELLER (3X11-1/8X16) (BLACK)	1	
9-9	58100-88L83-019	PROPELLER (3X11X17) (BLACK)	1	
9-10	58200-88L30	PROPELLER	1	OPT
10	58120-88L01	.BUSH, PROPELLER	1	
11	57632-95320	STOPPER, PROPELLER BUSH	1	
12	57633-94300	SPACER, PROPELLER NUT	1	
13	09141-18005	NUT	1	
14	09204-03003	COTTER PIN (D:3.6,L:25)	1	
15	09160-18028	WASHER (18.5X31X1)	1	

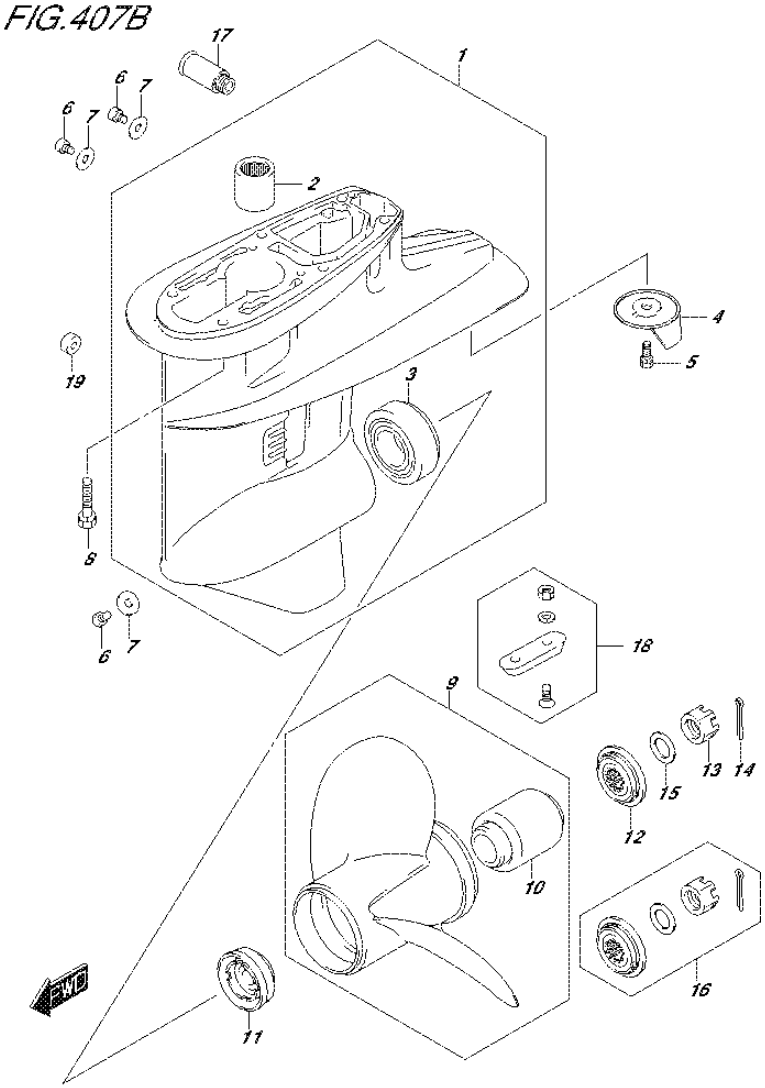

FIG.407B (3-H-2) GEAR CASE (DF40AQH E01)

REF NO.	PART NO.	DESCRIPTION	Q'TY	REMARKS
16	57630-94300	KIT, PROPELLER NUT	1	OPT
17	55181-95200	ATTACHMENT, FLUSH HOSE	1	OPT
18	55300-95500	ZINK ASSY, PROTECTION	1	OPT
19	55321-87J10	ANODE(MAGNESIUM)	1	OPT
20	25700-88L00	SEALING KIT, GEAR CASE	1	OPT
				NOT ILLUSTRATED

FIG.407C

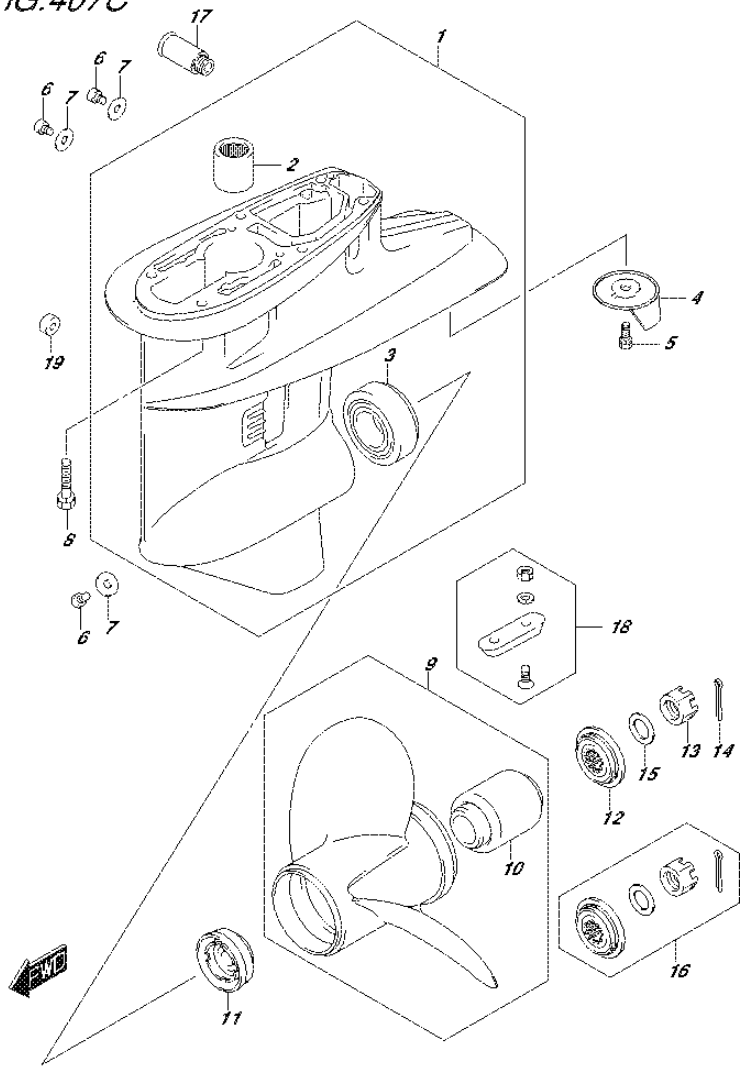

FIG.407C (3-H-3) GEAR CASE (DF40ATH E01)

REF NO.	PART NO.	DESCRIPTION	Q'TY	REMARKS
1	55100-87J50-0EP	CASE ASSY, GEAR (BLACK)	1	
2	09263-22039	.BEARING (22X30X30)	1	
3	09265-30004	.BEARING (30X62X17.25)	1	
4	55125-94400	TAB, TRIM	1	
5	09117-08109	BOLT (8X16)	1	
6	09248-10008	PLUG (10X7.5)	3	
7	09168-10022	GASKET (10X17X1.5)	3	
8	09116-08131	BOLT (8X45)	6	
9-1	58100-88L03-019	PROPELLER (3X11-1/2X9) (BLACK)	1	
9-2	58100-88L13-019	PROPELLER (3X11-1/2X10) (BLACK)	1	
9-3	58100-88L23-019	PROPELLER (3X11-1/2X11) (BLACK)	1	
9-4	58100-88LA0-019	PROPELLER (3X11-5/8X12) (BLACK)	1	
9-5	58100-88LB0-019	PROPELLER (3X11-1/2X13) (BLACK)	1	
9-6	58100-88L52-019	PROPELLER (3X11-3/8X14) (BLACK)	1	
9-7	58100-88L62-019	PROPELLER (3X11-1/4X15) (BLACK)	1	
9-8	58100-88L72-019	PROPELLER (3X11-1/8X16) (BLACK)	1	
9-9	58100-88L83-019	PROPELLER (3X11X17) (BLACK)	1	
9-10	58200-88L30	PROPELLER	1	OPT
10	58120-88L01	.BUSH, PROPELLER	1	
11	57632-95320	STOPPER, PROPELLER BUSH	1	
12	57633-94300	SPACER, PROPELLER NUT	1	
13	09141-18005	NUT	1	
14	09204-03003	COTTER PIN (D:3.6,L:25)	1	
15	09160-18028	WASHER (18.5X31X1)	1	

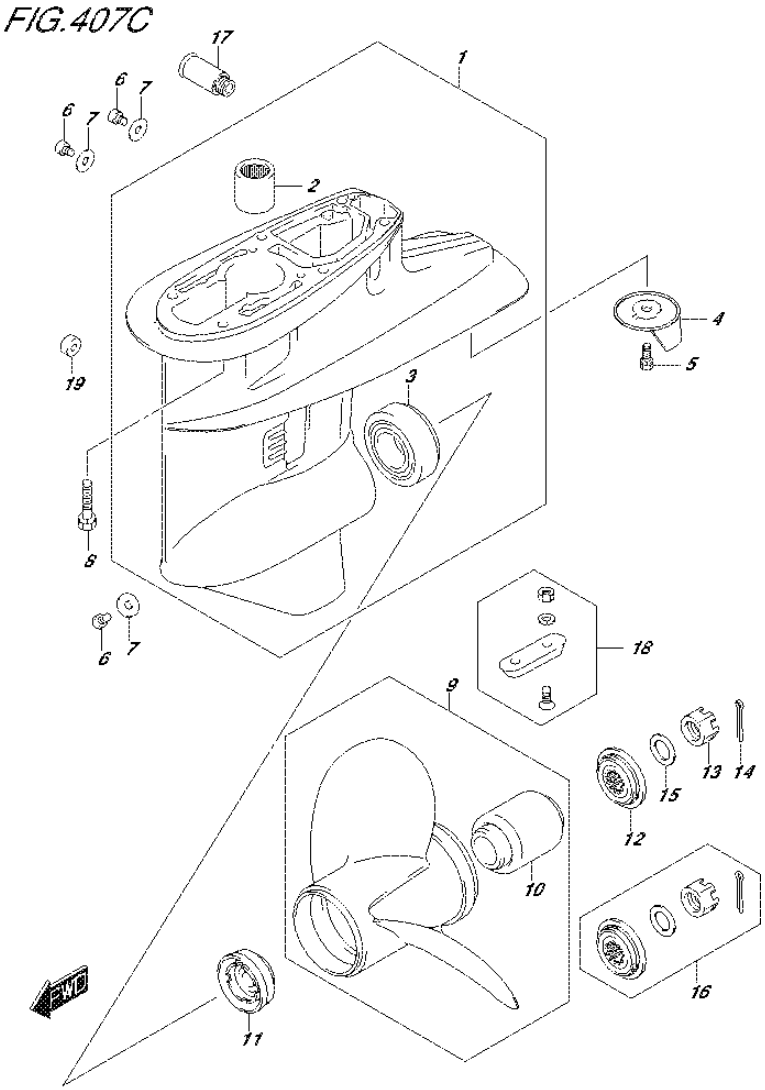

FIG.407C (3-H-4) GEAR CASE (DF40ATH E01)

REF NO.	PART NO.	DESCRIPTION	Q'TY	REMARKS
16	57630-94300	KIT, PROPELLER NUT	1	OPT
17	55181-95200	ATTACHMENT, FLUSH HOSE	1	OPT
18	55300-95500	ZINK ASSY, PROTECTION	1	OPT
19	55321-87J10	ANODE(MAGNESIUM)	1	OPT
20	25700-88L00	SEALING KIT, GEAR CASE	1	OPT
				NOT ILLUSTRATED

FIG.407D

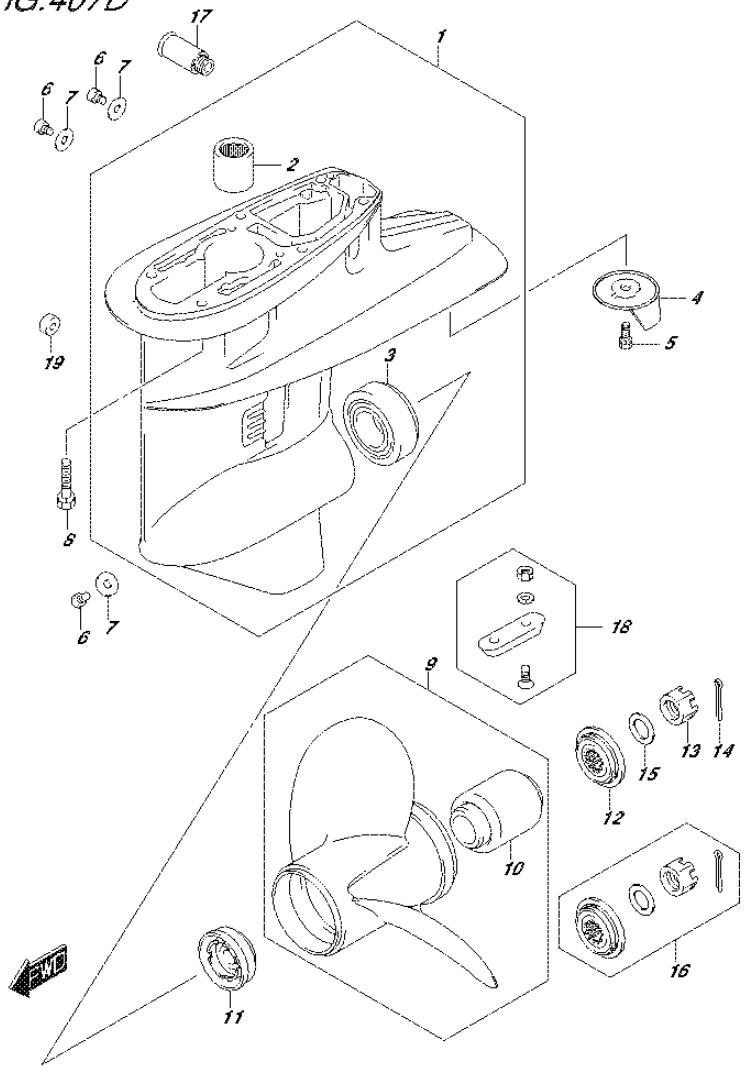

FIG.407D (3-H-5) GEAR CASE (DF40AST E34)

REF NO.	PART NO.	DESCRIPTION	Q'TY	REMARKS
1-1	55100-87J50-0EP	CASE ASSY, GEAR (BLACK)	1	
1-2	55100-87J50-Y5S	CASE ASSY, GEAR (WHITE)	1	
2	09263-22039	.BEARING (22X30X30)	1	
3	09265-30004	.BEARING (30X62X17.25)	1	
4	55125-94400	TAB, TRIM	1	
5	09117-08109	BOLT (8X16)	1	
6	09248-10008	PLUG (10X7.5)	3	
7	09168-10022	GASKET (10X17X1.5)	3	
8	09116-08131	BOLT (8X45)	6	
9-1	58100-88L03-019	PROPELLER (3X11-1/2X9) (BLACK)	1	
9-2	58100-88L13-019	PROPELLER (3X11-1/2X10) (BLACK)	1	
9-3	58100-88L23-019	PROPELLER (3X11-1/2X11) (BLACK)	1	
9-4	58100-88LA0-019	PROPELLER (3X11-5/8X12) (BLACK)	1	
9-5	58100-88LB0-019	PROPELLER (3X11-1/2X13) (BLACK)	1	
9-6	58100-88L52-019	PROPELLER (3X11-3/8X14) (BLACK)	1	
9-7	58100-88L62-019	PROPELLER (3X11-1/4X15) (BLACK)	1	
9-8	58100-88L72-019	PROPELLER (3X11-1/8X16) (BLACK)	1	
9-9	58100-88L83-019	PROPELLER (3X11X17) (BLACK)	1	
9-10	58200-88L30	PROPELLER	1	OPT
10	58120-88L01	.BUSH, PROPELLER	1	
11	57632-95320	STOPPER, PROPELLER BUSH	1	
12	57633-94300	SPACER, PROPELLER NUT	1	
13	09141-18005	NUT	1	
14	09204-03003	COTTER PIN (D:3.6,L:25)	1	
15	09160-18028	WASHER (18.5X31X1)	1	

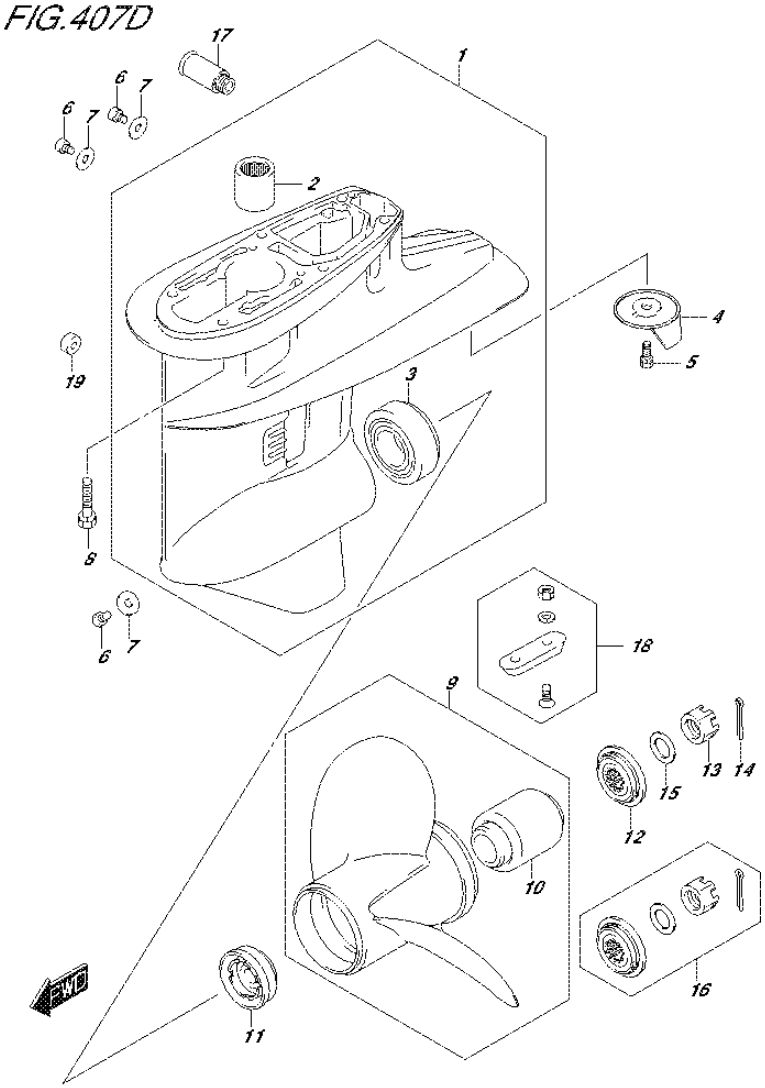

FIG.407D (3-H-6) GEAR CASE (DF40AST E34)

REF NO.	PART NO.	DESCRIPTION	Q'TY	REMARKS
16	57630-94300	KIT, PROPELLER NUT	1	OPT
17	55181-95200	ATTACHMENT, FLUSH HOSE	1	OPT
18	55300-95500	ZINK ASSY, PROTECTION	1	OPT
19	55321-87J10	ANODE(MAGNESIUM)	1	OPT
20	25700-88L00	SEALING KIT, GEAR CASE	1	OPT
				NOT ILLUSTRATED

FIG.407E

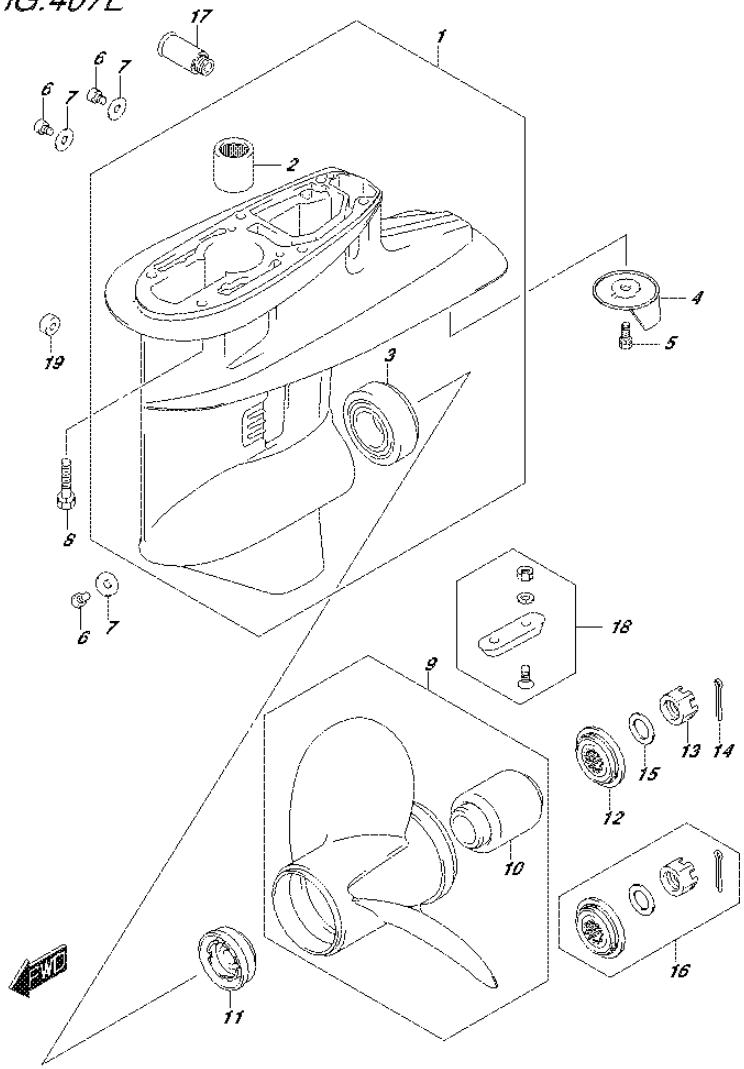

FIG.407E (3-H-7) GEAR CASE (DF50A E01)

REF NO.	PART NO.	DESCRIPTION	Q'TY	REMARKS
1-1	55100-87J50-0EP	CASE ASSY, GEAR (BLACK)	1	
1-2	55100-87J50-Y5S	CASE ASSY, GEAR (WHITE)	1	
2	09263-22039	.BEARING (22X30X30)	1	
3	09265-30004	.BEARING (30X62X17.25)	1	
4	55125-94400	TAB, TRIM	1	
5	09117-08109	BOLT (8X16)	1	
6	09248-10008	PLUG (10X7.5)	3	
7	09168-10022	GASKET (10X17X1.5)	3	
8	09116-08131	BOLT (8X45)	6	
9-1	58100-88L03-019	PROPELLER (3X11-1/2X9) (BLACK)	1	
9-2	58100-88L13-019	PROPELLER (3X11-1/2X10) (BLACK)	1	
9-3	58100-88L23-019	PROPELLER (3X11-1/2X11) (BLACK)	1	
9-4	58100-88LA0-019	PROPELLER (3X11-5/8X12) (BLACK)	1	
9-5	58100-88LB0-019	PROPELLER (3X11-1/2X13) (BLACK)	1	
9-6	58100-88L52-019	PROPELLER (3X11-3/8X14) (BLACK)	1	
9-7	58100-88L62-019	PROPELLER (3X11-1/4X15) (BLACK)	1	
9-8	58100-88L72-019	PROPELLER (3X11-1/8X16) (BLACK)	1	
9-9	58100-88L83-019	PROPELLER (3X11X17) (BLACK)	1	
9-10	58200-88L30	PROPELLER	1	OPT
10	58120-88L01	.BUSH, PROPELLER	1	
11	57632-95320	STOPPER, PROPELLER BUSH	1	
12	57633-94300	SPACER, PROPELLER NUT	1	
13	09141-18005	NUT	1	
14	09204-03003	COTTER PIN (D:3.6,L:25)	1	
15	09160-18028	WASHER (18.5X31X1)	1	

FIG.407E

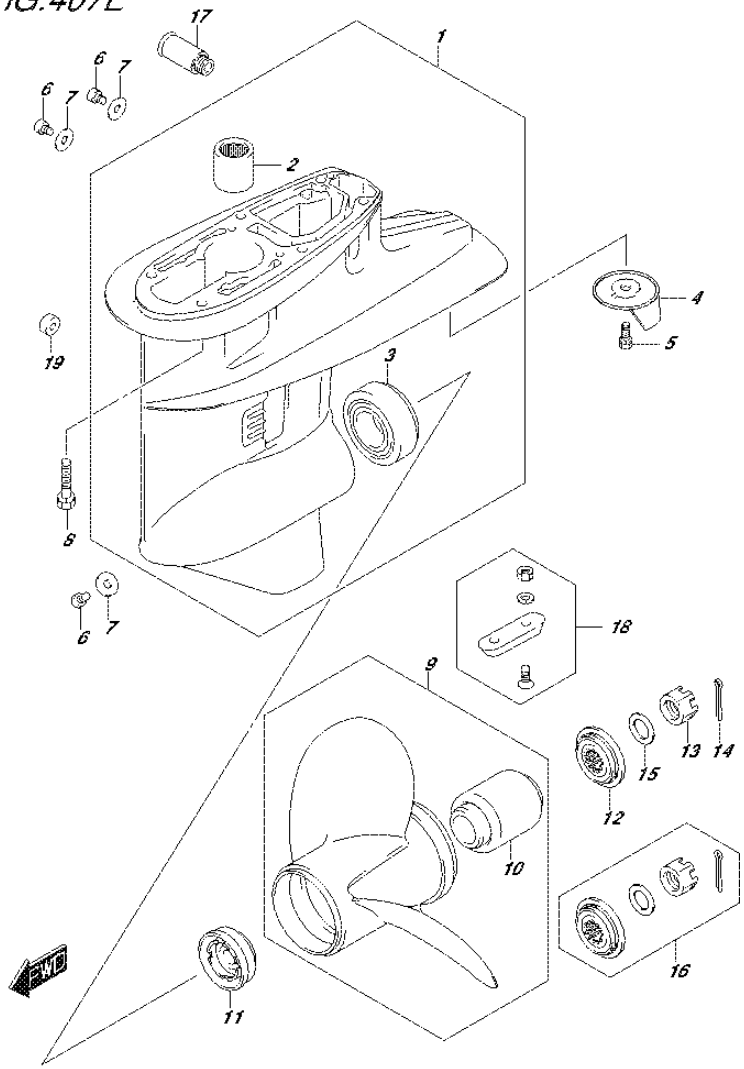

FIG.407E (3-H-8) GEAR CASE (DF50A E01)

REF NO.	PART NO.	DESCRIPTION	Q'TY	REMARKS
16	57630-94300	KIT, PROPELLER NUT	1	OPT
17	55181-95200	ATTACHMENT, FLUSH HOSE	1	OPT
18	55300-95500	ZINK ASSY, PROTECTION	1	OPT
19	55321-87J10	ANODE(MAGNESIUM)	1	OPT
20	25700-88L00	SEALING KIT, GEAR CASE	1	OPT
				NOT ILLUSTRATED

FIG.407F

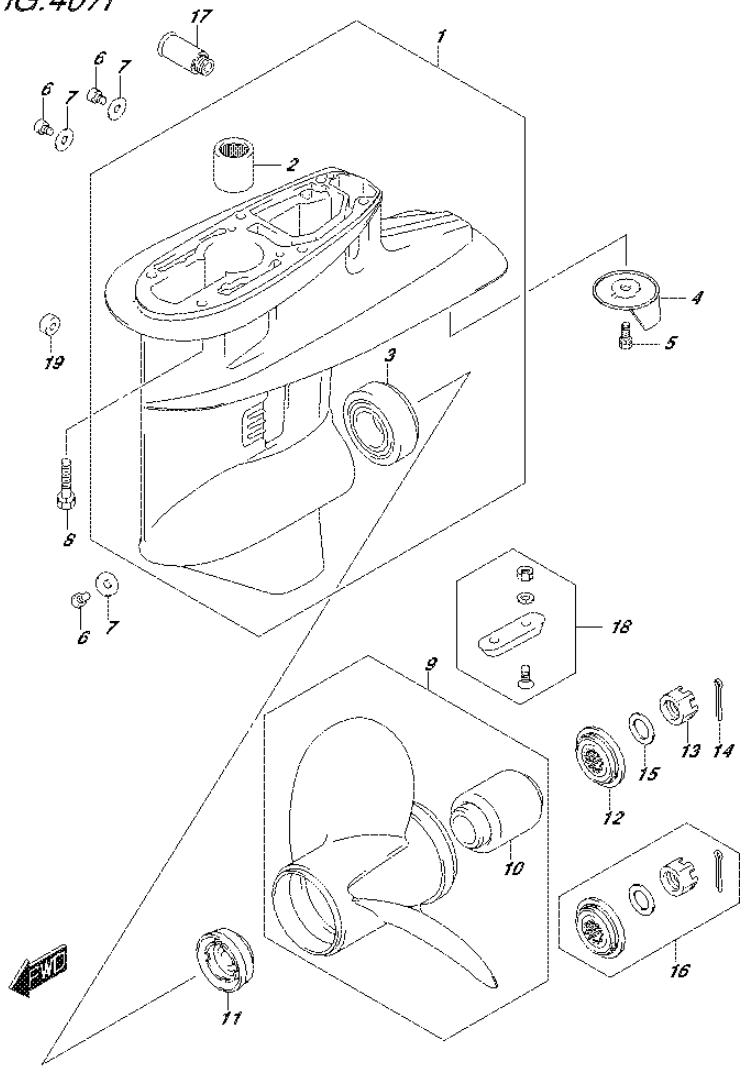

FIG.407F (3-H-9) GEAR CASE (DF50ATH E01)

REF NO.	PART NO.	DESCRIPTION	Q'TY	REMARKS
1	55100-87J50-0EP	CASE ASSY, GEAR (BLACK)	1	
2	09263-22039	.BEARING (22X30X30)	1	
3	09265-30004	.BEARING (30X62X17.25)	1	
4	55125-94400	TAB, TRIM	1	
5	09117-08109	BOLT (8X16)	1	
6	09248-10008	PLUG (10X7.5)	3	
7	09168-10022	GASKET (10X17X1.5)	3	
8	09116-08131	BOLT (8X45)	6	
9-1	58100-88L03-019	PROPELLER (3X11-1/2X9) (BLACK)	1	
9-2	58100-88L13-019	PROPELLER (3X11-1/2X10) (BLACK)	1	
9-3	58100-88L23-019	PROPELLER (3X11-1/2X11) (BLACK)	1	
9-4	58100-88LA0-019	PROPELLER (3X11-5/8X12) (BLACK)	1	
9-5	58100-88LB0-019	PROPELLER (3X11-1/2X13) (BLACK)	1	
9-6	58100-88L52-019	PROPELLER (3X11-3/8X14) (BLACK)	1	
9-7	58100-88L62-019	PROPELLER (3X11-1/4X15) (BLACK)	1	
9-8	58100-88L72-019	PROPELLER (3X11-1/8X16) (BLACK)	1	
9-9	58100-88L83-019	PROPELLER (3X11X17) (BLACK)	1	
9-10	58200-88L30	PROPELLER	1	OPT
10	58120-88L01	.BUSH, PROPELLER	1	
11	57632-95320	STOPPER, PROPELLER BUSH	1	
12	57633-94300	SPACER, PROPELLER NUT	1	
13	09141-18005	NUT	1	
14	09204-03003	COTTER PIN (D:3.6,L:25)	1	
15	09160-18028	WASHER (18.5X31X1)	1	

FIG.407F

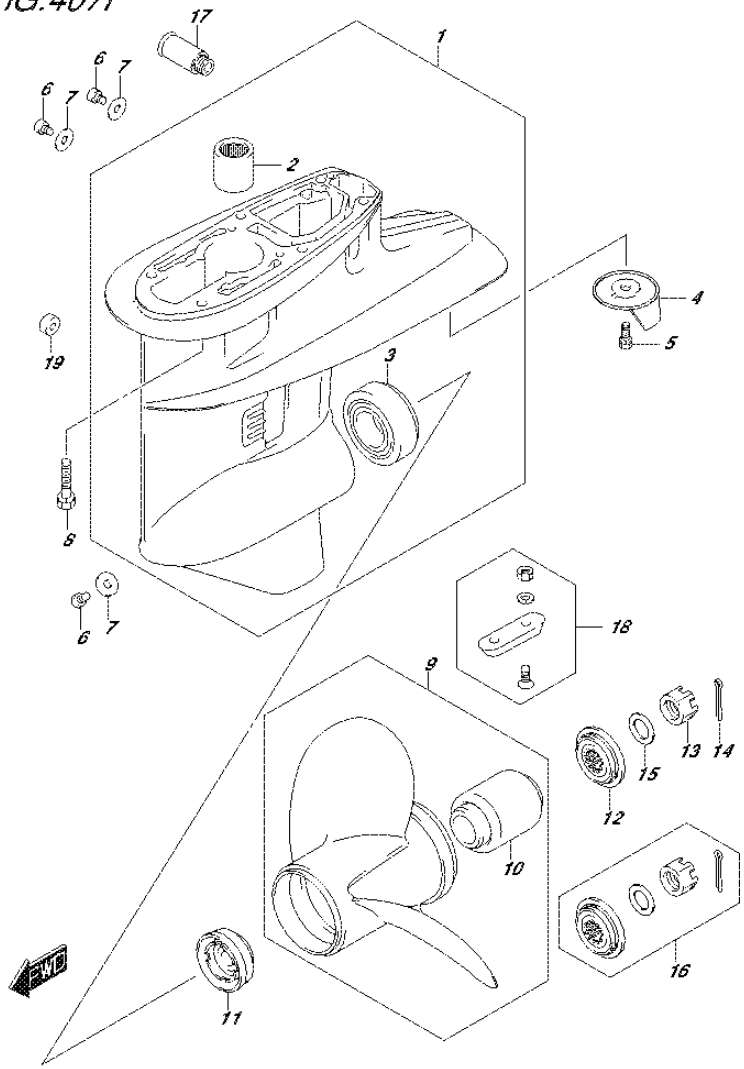

FIG.407F (3-H-10) GEAR CASE (DF50ATH E01)

REF NO.	PART NO.	DESCRIPTION	Q'TY	REMARKS
16	57630-94300	KIT, PROPELLER NUT	1	OPT
17	55181-95200	ATTACHMENT, FLUSH HOSE	1	OPT
18	55300-95500	ZINK ASSY, PROTECTION	1	OPT
19	55321-87J10	ANODE(MAGNESIUM)	1	OPT
20	25700-88L00	SEALING KIT, GEAR CASE	1	OPT
				NOT ILLUSTRATED

FIG.407G

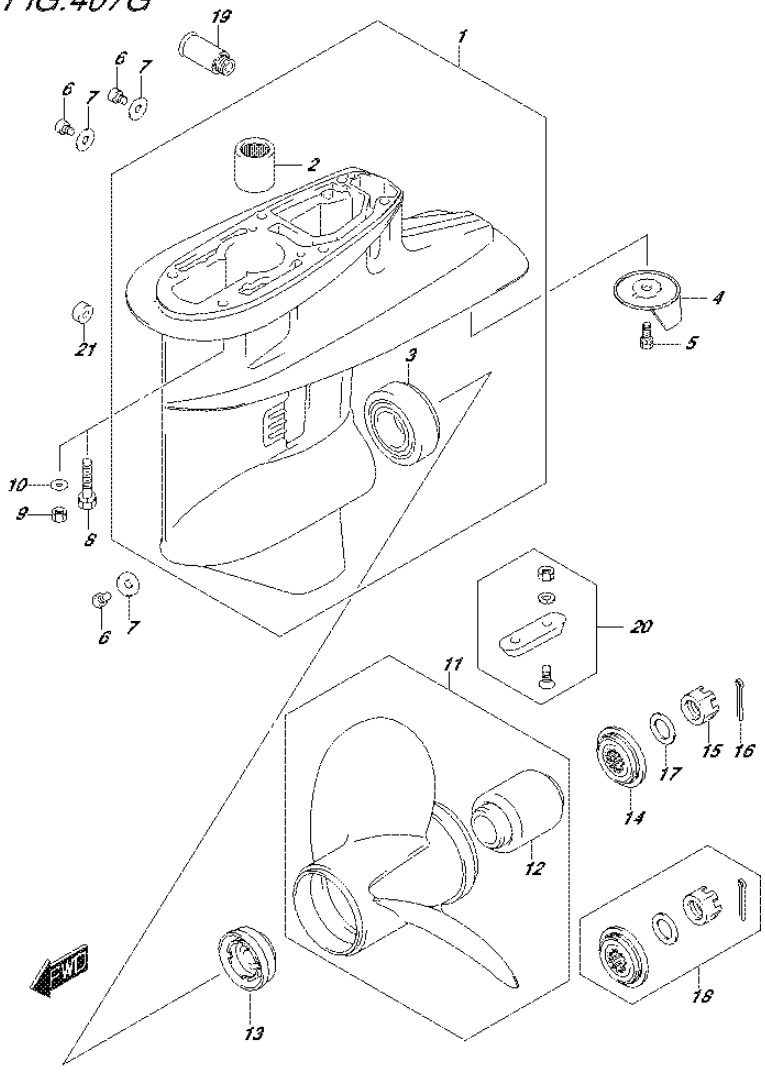

FIG.407G (3-H-11) GEAR CASE (DF60A E01)

REF NO.	PART NO.	DESCRIPTION	Q'TY	REMARKS
1-1	55100-87J50-0EP	CASE ASSY, GEAR (BLACK)	1	
1-2	55100-87J50-Y5S	CASE ASSY, GEAR (WHITE)	1	
2	09263-22039	.BEARING (22X30X30)	1	
3	09265-30004	.BEARING (30X62X17.25)	1	
4	55125-94400	TAB, TRIM	1	
5	09117-08109	BOLT (8X16)	1	
6	09248-10008	PLUG (10X7.5)	3	
7	09168-10022	GASKET (10X17X1.5)	3	
8	09116-08131	BOLT (8X45)	6	W/TRANSOM(S) W/TRANSOM(L)
9	09140-08023-XC0	NUT	6	W/TRANSOM(X)
10	09160-08082	WASHER (8.5X16X1.2)	6	W/TRANSOM(X)
11-1	58100-88L03-019	PROPELLER (3X11-1/2X9) (BLACK)	1	
11-2	58100-88L13-019	PROPELLER (3X11-1/2X10) (BLACK)	1	
11-3	58100-88L23-019	PROPELLER (3X11-1/2X11) (BLACK)	1	
11-4	58100-88LA0-019	PROPELLER (3X11-5/8X12) (BLACK)	1	
11-5	58100-88LB0-019	PROPELLER (3X11-1/2X13) (BLACK)	1	
11-6	58100-88L52-019	PROPELLER (3X11-3/8X14) (BLACK)	1	
11-7	58100-88L62-019	PROPELLER (3X11-1/4X15) (BLACK)	1	
11-8	58100-88L72-019	PROPELLER (3X11-1/8X16) (BLACK)	1	
11-9	58100-88L83-019	PROPELLER (3X11X17) (BLACK)	1	
11-10	58200-88L30	PROPELLER	1	OPT
12	58120-88L01	.BUSH, PROPELLER	1	
13	57632-95320	STOPPER, PROPELLER BUSH	1	
14	57633-94300	SPACER, PROPELLER NUT	1	

FIG.407G

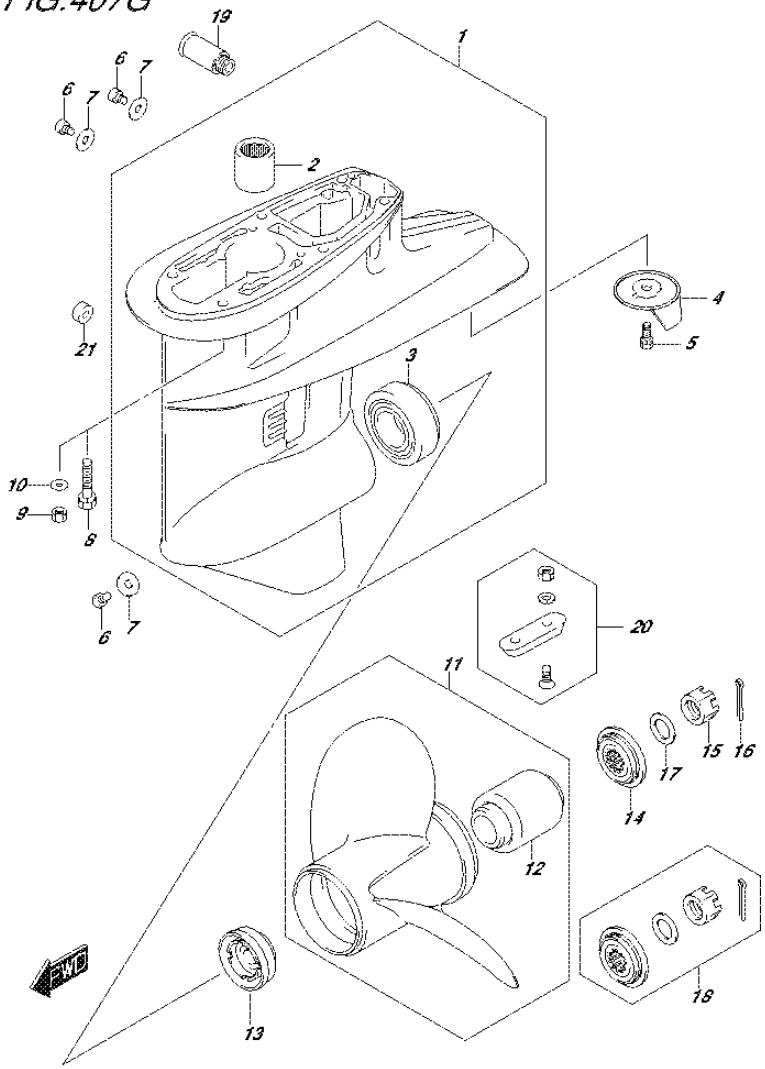

FIG.407G (3-H-12) GEAR CASE (DF60A E01)

REF NO.	PART NO.	DESCRIPTION	Q'TY	REMARKS
15	09141-18005	NUT	1	
16	09204-03003	COTTER PIN (D:3.6,L:25)	1	
17	09160-18028	WASHER (18.5X31X1)	1	
18	57630-94300	KIT, PROPELLER NUT	1	OPT
19	55181-95200	ATTACHMENT, FLUSH HOSE	1	OPT
20	55300-95500	ZINK ASSY, PROTECTION	1	OPT
21	55321-87J10	ANODE(MAGNESIUM)	1	OPT
22	25700-88L00	SEALING KIT, GEAR CASE	1	OPT
				NOT ILLUSTRATED

FIG.407H

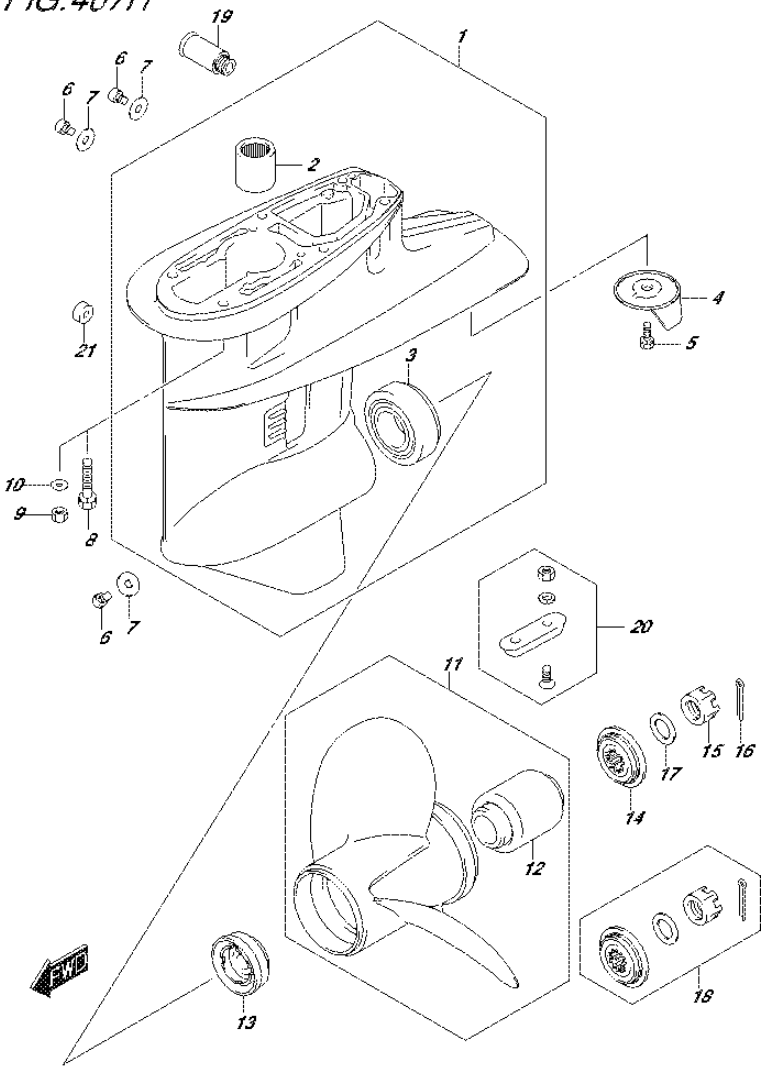

FIG.407H (3-H-13) GEAR CASE (DF60A E40)

REF NO.	PART NO.	DESCRIPTION	Q'TY	REMARKS
1-1	55100-87J50-0EP	CASE ASSY, GEAR (BLACK)	1	
1-2	55100-87J50-Y5S	CASE ASSY, GEAR (WHITE)	1	
2	09263-22039	.BEARING (22X30X30)	1	
3	09265-30004	.BEARING (30X62X17.25)	1	
4	55125-94400	TAB, TRIM	1	
5	09117-08109	BOLT (8X16)	1	
6	09248-10008	PLUG (10X7.5)	3	
7	09168-10022	GASKET (10X17X1.5)	3	
8	09116-08131	BOLT (8X45)	6	W/TRANSOM(L)
9	09140-08023-XC0	NUT	6	W/TRANSOM(X)
10	09160-08082	WASHER (8.5X16X1.2)	6	W/TRANSOM(X)
11-1	58100-88L03-019	PROPELLER (3X11-1/2X9) (BLACK)	1	
11-2	58100-88L13-019	PROPELLER (3X11-1/2X10) (BLACK)	1	
11-3	58100-88L23-019	PROPELLER (3X11-1/2X11) (BLACK)	1	
11-4	58100-88LA0-019	PROPELLER (3X11-5/8X12) (BLACK)	1	
11-5	58100-88LB0-019	PROPELLER (3X11-1/2X13) (BLACK)	1	
11-6	58100-88L52-019	PROPELLER (3X11-3/8X14) (BLACK)	1	
11-7	58100-88L62-019	PROPELLER (3X11-1/4X15) (BLACK)	1	
11-8	58100-88L72-019	PROPELLER (3X11-1/8X16) (BLACK)	1	
11-9	58100-88L83-019	PROPELLER (3X11X17) (BLACK)	1	
11-10	58200-88L30	PROPELLER	1	OPT
12	58120-88L01	.BUSH, PROPELLER	1	
13	57632-95320	STOPPER, PROPELLER BUSH	1	
14	57633-94300	SPACER, PROPELLER NUT	1	

FIG.407H

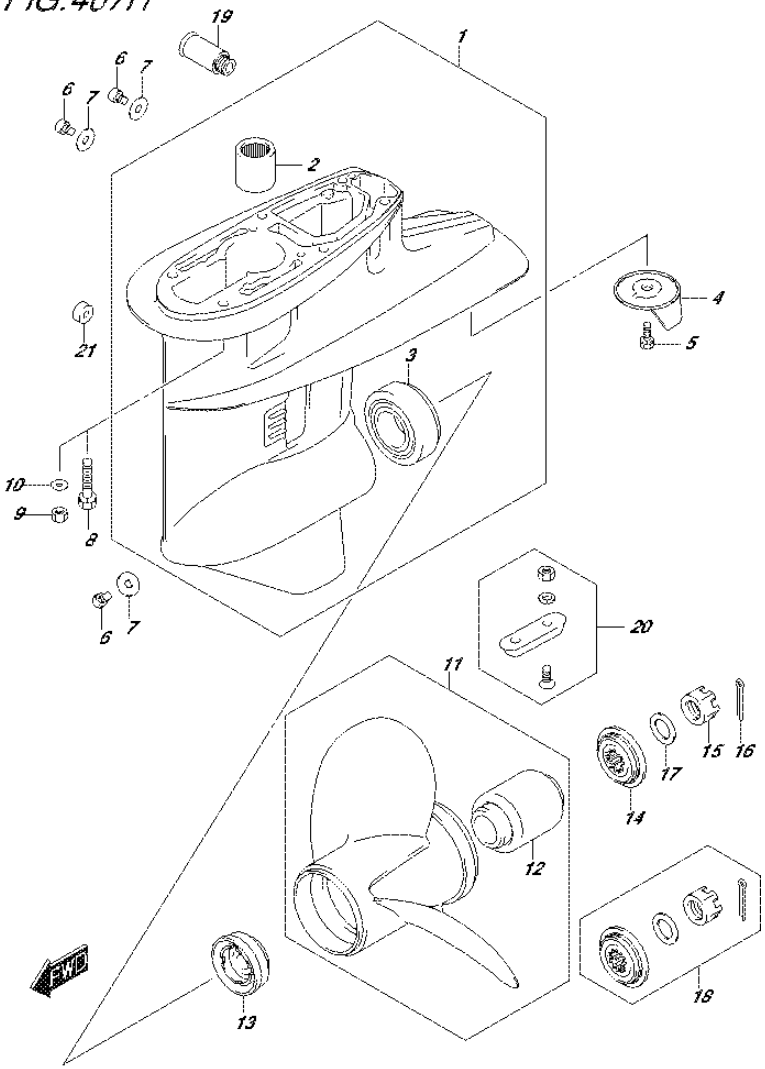

FIG.407H (3-H-14) GEAR CASE (DF60A E40)

REF NO.	PART NO.	DESCRIPTION	Q'TY	REMARKS
15	09141-18005	NUT	1	
16	09204-03003	COTTER PIN (D:3.6,L:25)	1	
17	09160-18028	WASHER (18.5X31X1)	1	
18	57630-94300	KIT, PROPELLER NUT	1	OPT
19	55181-95200	ATTACHMENT, FLUSH HOSE	1	OPT
20	55300-95500	ZINK ASSY, PROTECTION	1	OPT
21	55321-87J10	ANODE(MAGNESIUM)	1	OPT
22	25700-88L00	SEALING KIT, GEAR CASE	1	OPT
				NOT ILLUSTRATED

FIG.407J

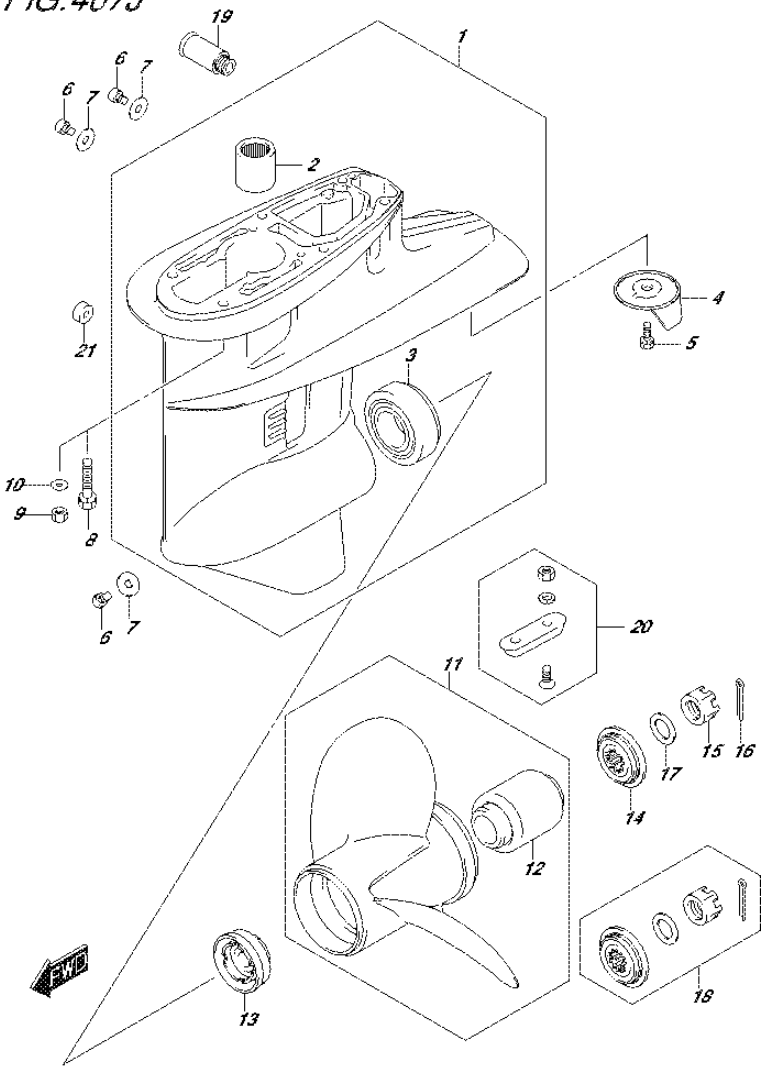

FIG.407J (3-H-15) GEAR CASE (DF60AQH E01)

REF NO.	PART NO.	DESCRIPTION	Q'TY	REMARKS
1	55100-87J50-0EP	CASE ASSY, GEAR (BLACK)	1	
2	09263-22039	.BEARING (22X30X30)	1	
3	09265-30004	.BEARING (30X62X17.25)	1	
4	55125-94400	TAB, TRIM	1	
5	09117-08109	BOLT (8X16)	1	
6	09248-10008	PLUG (10X7.5)	3	
7	09168-10022	GASKET (10X17X1.5)	3	
8	09116-08131	BOLT (8X45)	6	W/TRANSOM(L)
9	09140-08023-XC0	NUT	6	W/TRANSOM(X)
10	09160-08082	WASHER (8.5X16X1.2)	6	W/TRANSOM(X)
11-1	58100-88L03-019	PROPELLER (3X11-1/2X9) (BLACK)	1	
11-2	58100-88L13-019	PROPELLER (3X11-1/2X10) (BLACK)	1	
11-3	58100-88L23-019	PROPELLER (3X11-1/2X11) (BLACK)	1	
11-4	58100-88LA0-019	PROPELLER (3X11-5/8X12) (BLACK)	1	
11-5	58100-88LB0-019	PROPELLER (3X11-1/2X13) (BLACK)	1	
11-6	58100-88L52-019	PROPELLER (3X11-3/8X14) (BLACK)	1	
11-7	58100-88L62-019	PROPELLER (3X11-1/4X15) (BLACK)	1	
11-8	58100-88L72-019	PROPELLER (3X11-1/8X16) (BLACK)	1	
11-9	58100-88L83-019	PROPELLER (3X11X17) (BLACK)	1	
11-10	58200-88L30	PROPELLER	1	OPT
12	58120-88L01	.BUSH, PROPELLER	1	
13	57632-95320	STOPPER, PROPELLER BUSH	1	
14	57633-94300	SPACER, PROPELLER NUT	1	

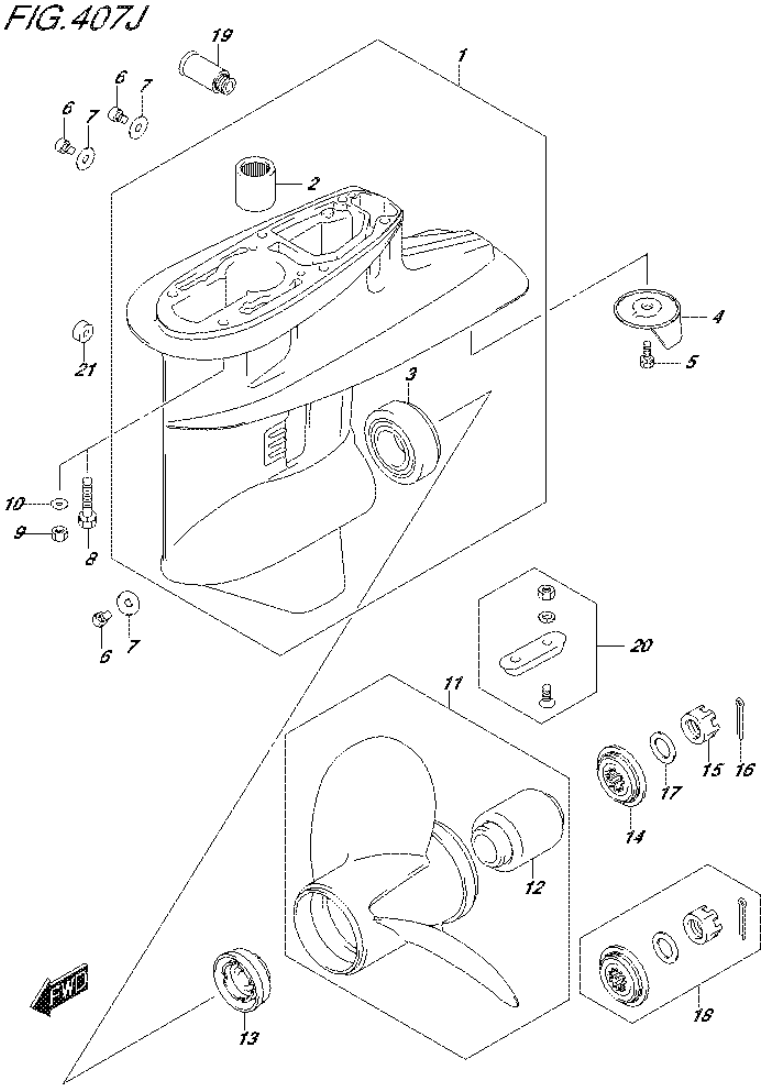

FIG.407J (3-I-2) GEAR CASE (DF60AQH E01)

REF NO.	PART NO.	DESCRIPTION	Q'TY	REMARKS
15	09141-18005	NUT	1	
16	09204-03003	COTTER PIN (D:3.6,L:25)	1	
17	09160-18028	WASHER (18.5X31X1)	1	
18	57630-94300	KIT, PROPELLER NUT	1	OPT
19	55181-95200	ATTACHMENT, FLUSH HOSE	1	OPT
20	55300-95500	ZINK ASSY, PROTECTION	1	OPT
21	55321-87J10	ANODE(MAGNESIUM)	1	OPT
22	25700-88L00	SEALING KIT, GEAR CASE	1	OPT
				NOT ILLUSTRATED

FIG.407K

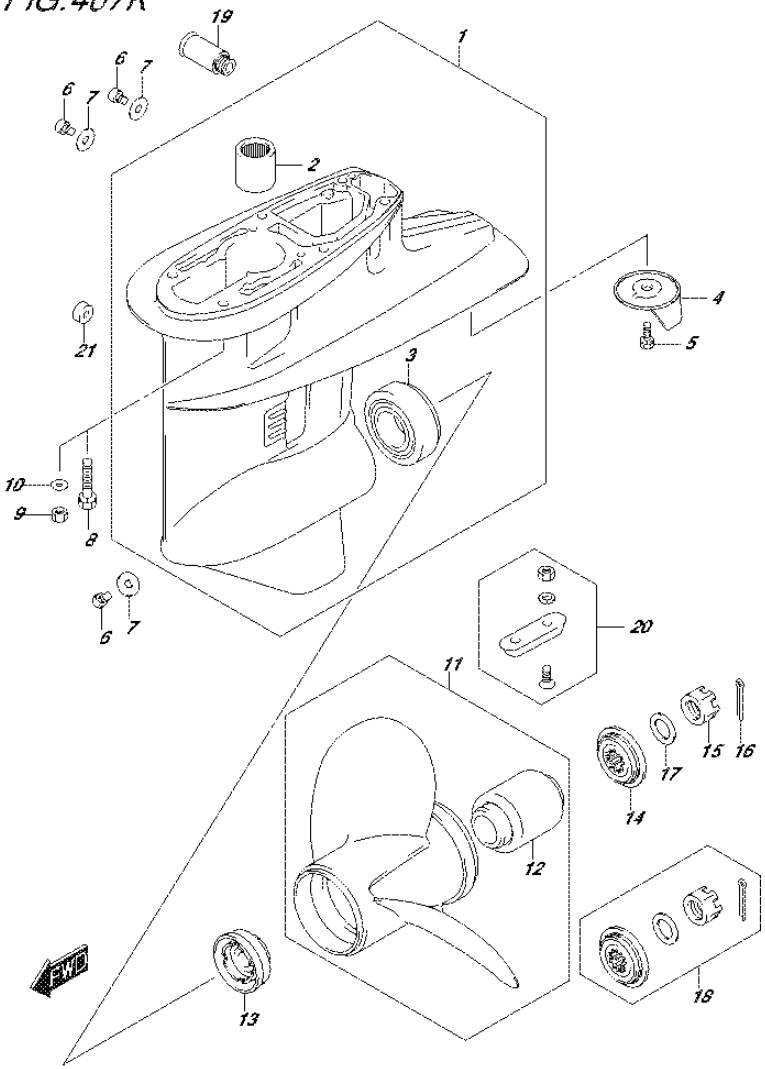

FIG.407K (3-I-3) GEAR CASE (DF60AQH E40)

REF NO.	PART NO.	DESCRIPTION	Q'TY	REMARKS
1	55100-87J50-0EP	CASE ASSY, GEAR (BLACK)	1	
2	09263-22039	.BEARING (22X30X30)	1	
3	09265-30004	.BEARING (30X62X17.25)	1	
4	55125-94400	TAB, TRIM	1	
5	09117-08109	BOLT (8X16)	1	
6	09248-10008	PLUG (10X7.5)	3	
7	09168-10022	GASKET (10X17X1.5)	3	
8	09116-08131	BOLT (8X45)	6	W/TRANSOM(L)
9	09140-08023-XC0	NUT	6	W/TRANSOM(X)
10	09160-08082	WASHER (8.5X16X1.2)	6	W/TRANSOM(X)
11-1	58100-88L03-019	PROPELLER (3X11-1/2X9) (BLACK)	1	
11-2	58100-88L13-019	PROPELLER (3X11-1/2X10) (BLACK)	1	
11-3	58100-88L23-019	PROPELLER (3X11-1/2X11) (BLACK)	1	
11-4	58100-88LA0-019	PROPELLER (3X11-5/8X12) (BLACK)	1	
11-5	58100-88LB0-019	PROPELLER (3X11-1/2X13) (BLACK)	1	
11-6	58100-88L52-019	PROPELLER (3X11-3/8X14) (BLACK)	1	
11-7	58100-88L62-019	PROPELLER (3X11-1/4X15) (BLACK)	1	
11-8	58100-88L72-019	PROPELLER (3X11-1/8X16) (BLACK)	1	
11-9	58100-88L83-019	PROPELLER (3X11X17) (BLACK)	1	
11-10	58200-88L30	PROPELLER	1	OPT
12	58120-88L01	.BUSH, PROPELLER	1	
13	57632-95320	STOPPER, PROPELLER BUSH	1	
14	57633-94300	SPACER, PROPELLER NUT	1	

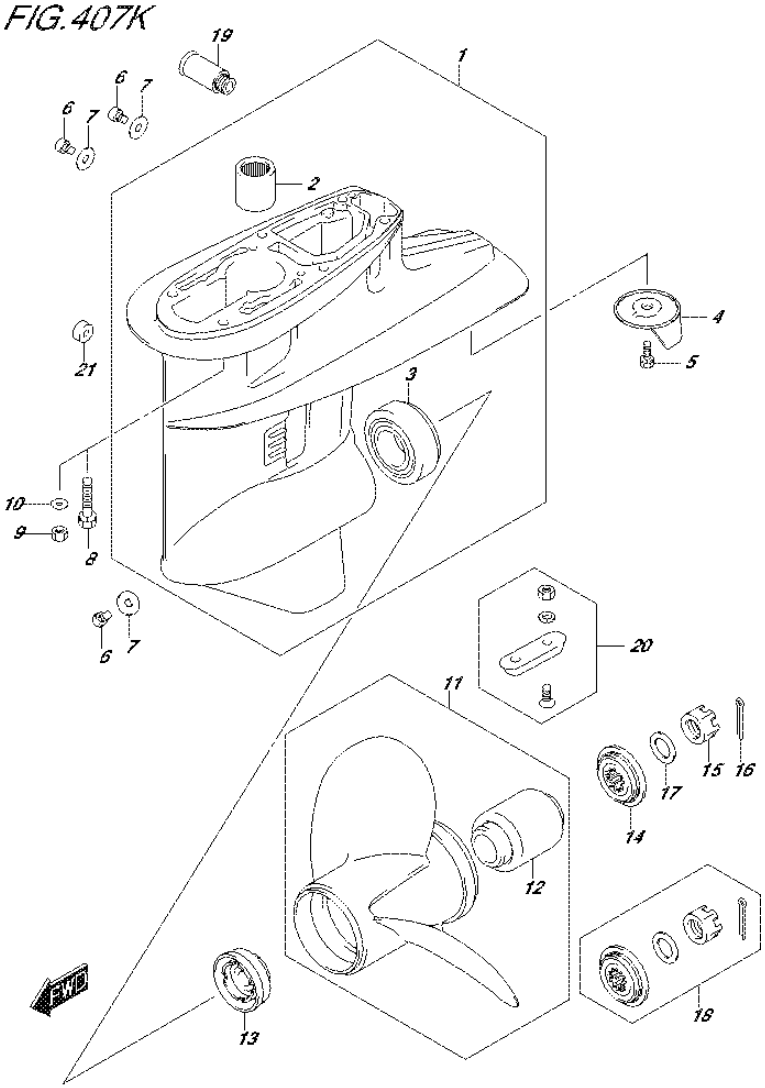

FIG.407K (3-I-4) GEAR CASE (DF60AQH E40)

REF NO.	PART NO.	DESCRIPTION	Q'TY	REMARKS
15	09141-18005	NUT	1	
16	09204-03003	COTTER PIN (D:3.6,L:25)	1	
17	09160-18028	WASHER (18.5X31X1)	1	
18	57630-94300	KIT, PROPELLER NUT	1	OPT
19	55181-95200	ATTACHMENT, FLUSH HOSE	1	OPT
20	55300-95500	ZINK ASSY, PROTECTION	1	OPT
21	55321-87J10	ANODE(MAGNESIUM)	1	OPT
22	25700-88L00	SEALING KIT, GEAR CASE	1	OPT
				NOT ILLUSTRATED

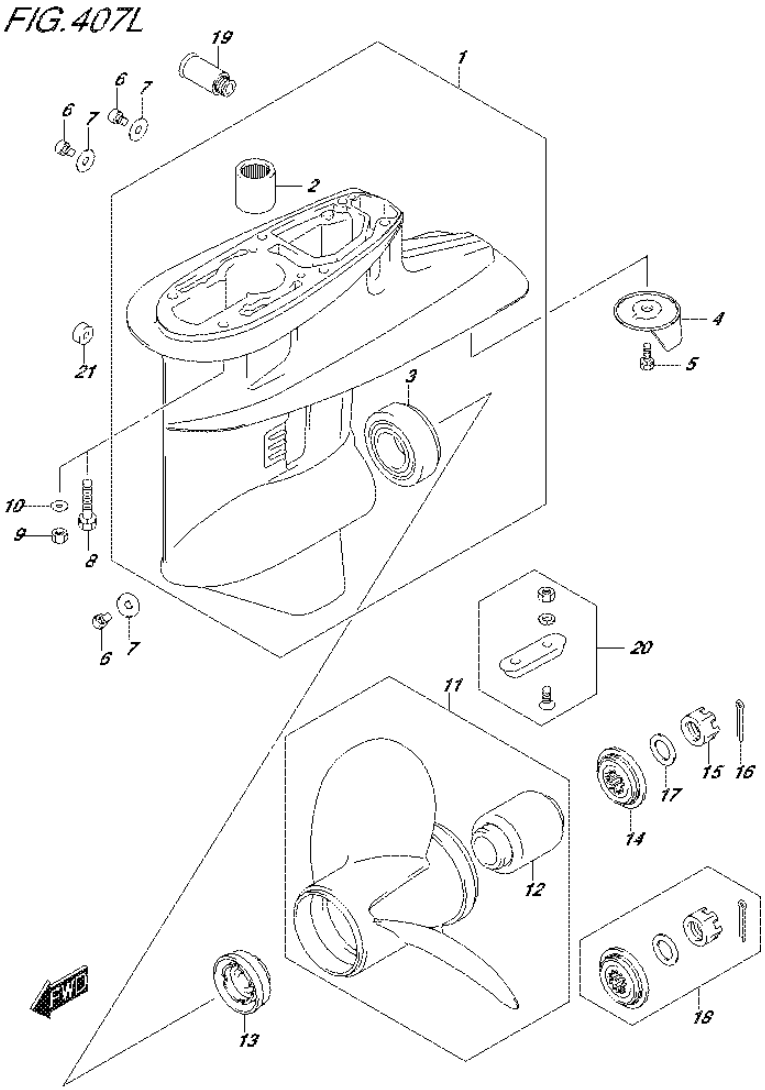

FIG.407L (3-I-5) GEAR CASE (DF60ATH E01)

REF NO.	PART NO.	DESCRIPTION	Q'TY	REMARKS
1	55100-87J50-0EP	CASE ASSY, GEAR (BLACK)	1	
2	09263-22039	.BEARING (22X30X30)	1	
3	09265-30004	.BEARING (30X62X17.25)	1	
4	55125-94400	TAB, TRIM	1	
5	09117-08109	BOLT (8X16)	1	
6	09248-10008	PLUG (10X7.5)	3	
7	09168-10022	GASKET (10X17X1.5)	3	
8	09116-08131	BOLT (8X45)	6	W/TRANSOM(L)
9	09140-08023-XC0	NUT	6	W/TRANSOM(X)
10	09160-08082	WASHER (8.5X16X1.2)	6	W/TRANSOM(X)
11-1	58100-88L03-019	PROPELLER (3X11-1/2X9) (BLACK)	1	
11-2	58100-88L13-019	PROPELLER (3X11-1/2X10) (BLACK)	1	
11-3	58100-88L23-019	PROPELLER (3X11-1/2X11) (BLACK)	1	
11-4	58100-88LA0-019	PROPELLER (3X11-5/8X12) (BLACK)	1	
11-5	58100-88LB0-019	PROPELLER (3X11-1/2X13) (BLACK)	1	
11-6	58100-88L52-019	PROPELLER (3X11-3/8X14) (BLACK)	1	
11-7	58100-88L62-019	PROPELLER (3X11-1/4X15) (BLACK)	1	
11-8	58100-88L72-019	PROPELLER (3X11-1/8X16) (BLACK)	1	
11-9	58100-88L83-019	PROPELLER (3X11X17) (BLACK)	1	
11-10	58200-88L30	PROPELLER	1	OPT
12	58120-88L01	.BUSH, PROPELLER	1	
13	57632-95320	STOPPER, PROPELLER BUSH	1	
14	57633-94300	SPACER, PROPELLER NUT	1	

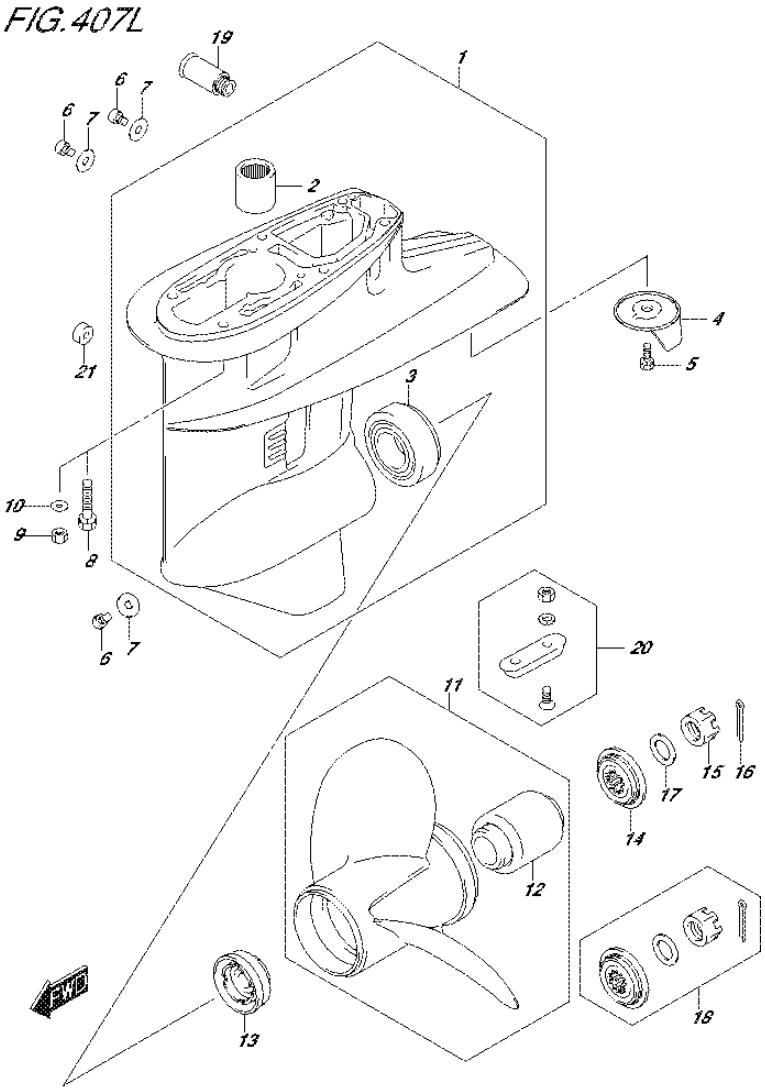

FIG.407L (3-I-6) GEAR CASE (DF60ATH E01)

REF NO.	PART NO.	DESCRIPTION	Q'TY	REMARKS
15	09141-18005	NUT	1	
16	09204-03003	COTTER PIN (D:3.6,L:25)	1	
17	09160-18028	WASHER (18.5X31X1)	1	
18	57630-94300	KIT, PROPELLER NUT	1	OPT
19	55181-95200	ATTACHMENT, FLUSH HOSE	1	OPT
20	55300-95500	ZINK ASSY, PROTECTION	1	OPT
21	55321-87J10	ANODE(MAGNESIUM)	1	OPT
22	25700-88L00	SEALING KIT, GEAR CASE	1	OPT
				NOT ILLUSTRATED

FIG.407M

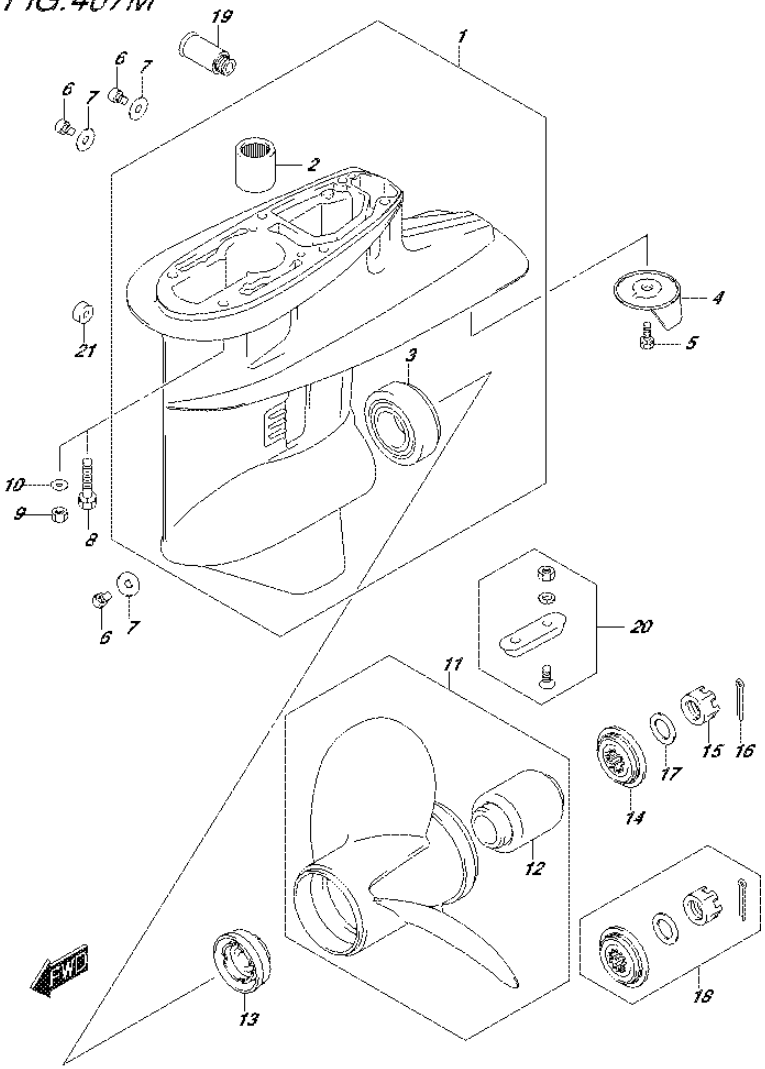

FIG.407M (3-I-7) GEAR CASE (DF60ATH E40)

REF NO.	PART NO.	DESCRIPTION	Q'TY	REMARKS
1	55100-87J50-0EP	CASE ASSY, GEAR (BLACK)	1	
2	09263-22039	.BEARING (22X30X30)	1	
3	09265-30004	.BEARING (30X62X17.25)	1	
4	55125-94400	TAB, TRIM	1	
5	09117-08109	BOLT (8X16)	1	
6	09248-10008	PLUG (10X7.5)	3	
7	09168-10022	GASKET (10X17X1.5)	3	
8	09116-08131	BOLT (8X45)	6	W/TRANSOM(L)
9	09140-08023-XC0	NUT	6	W/TRANSOM(X)
10	09160-08082	WASHER (8.5X16X1.2)	6	W/TRANSOM(X)
11-1	58100-88L03-019	PROPELLER (3X11-1/2X9) (BLACK)	1	
11-2	58100-88L13-019	PROPELLER (3X11-1/2X10) (BLACK)	1	
11-3	58100-88L23-019	PROPELLER (3X11-1/2X11) (BLACK)	1	
11-4	58100-88LA0-019	PROPELLER (3X11-5/8X12) (BLACK)	1	
11-5	58100-88LB0-019	PROPELLER (3X11-1/2X13) (BLACK)	1	
11-6	58100-88L52-019	PROPELLER (3X11-3/8X14) (BLACK)	1	
11-7	58100-88L62-019	PROPELLER (3X11-1/4X15) (BLACK)	1	
11-8	58100-88L72-019	PROPELLER (3X11-1/8X16) (BLACK)	1	
11-9	58100-88L83-019	PROPELLER (3X11X17) (BLACK)	1	
11-10	58200-88L30	PROPELLER	1	OPT
12	58120-88L01	.BUSH, PROPELLER	1	
13	57632-95320	STOPPER, PROPELLER BUSH	1	
14	57633-94300	SPACER, PROPELLER NUT	1	

FIG.407M

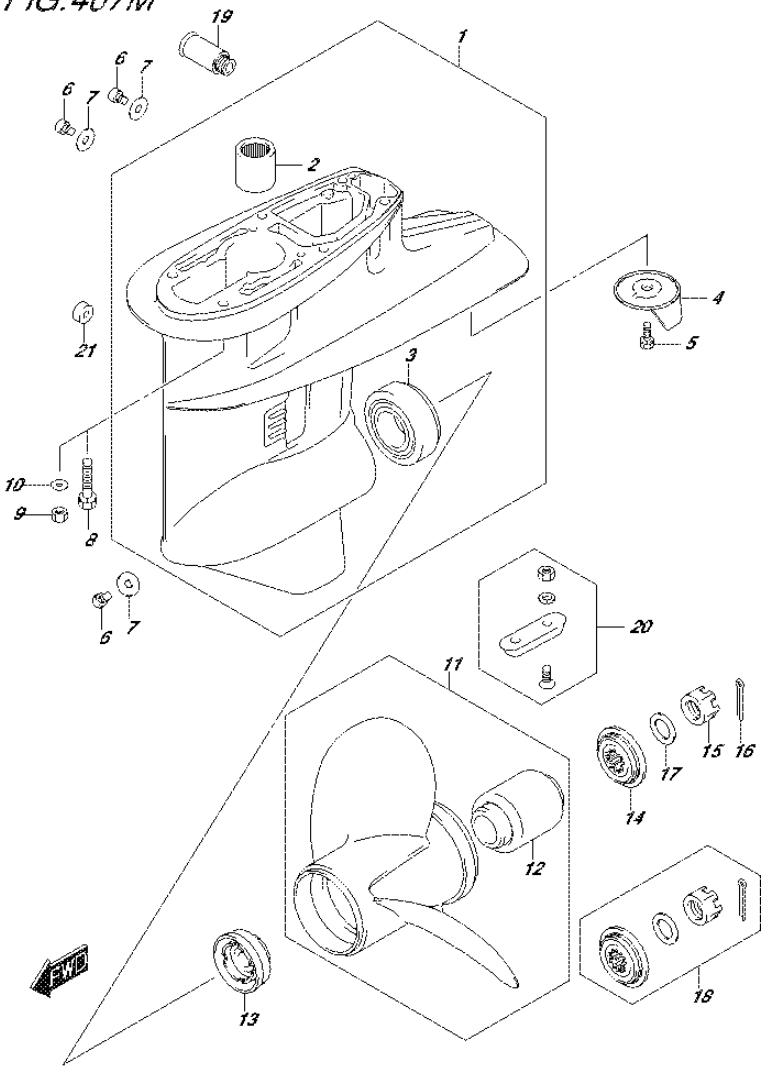

FIG.407M (3-I-8) GEAR CASE (DF60ATH E40)

REF NO.	PART NO.	DESCRIPTION	Q'TY	REMARKS
15	09141-18005	NUT	1	
16	09204-03003	COTTER PIN (D:3.6,L:25)	1	
17	09160-18028	WASHER (18.5X31X1)	1	
18	57630-94300	KIT, PROPELLER NUT	1	OPT
19	55181-95200	ATTACHMENT, FLUSH HOSE	1	OPT
20	55300-95500	ZINK ASSY, PROTECTION	1	OPT
21	55321-87J10	ANODE(MAGNESIUM)	1	OPT
22	25700-88L00	SEALING KIT, GEAR CASE	1	OPT
				NOT ILLUSTRATED

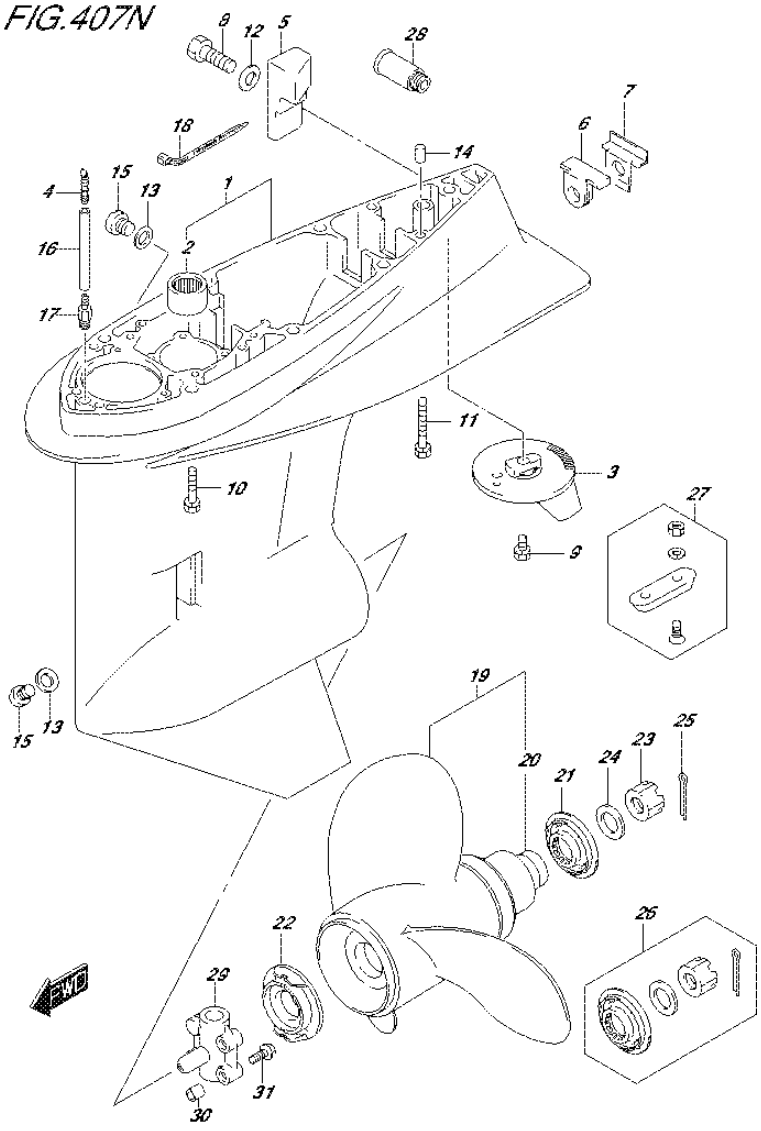

FIG.407N (3-I-9) GEAR CASE (DF50AVT E01)

REF NO.	PART NO.	DESCRIPTION	Q'TY	REMARKS
1	55110-90J15-0EP	CASE, GEAR (BLACK)	1	
2	09263-28016	.BEARING (28.6X38X31.8)	1	
3	55125-90J01	TAB, TRIM	1	
4	55127-87D00	UNION, SPEEDOMETER HOSE	1	
5	55321-90J01	ANODE, GEAR CASE	1	
6	55332-87D11	RUBBER, EXHAUST SEAL	1	
7	55333-87D10	PLATE, EXHAUST SEAL	1	
8	09100-06131	BOLT (6X12)	1	
9	09116-08137	BOLT (8X22)	1	
10	09116-10150	BOLT (10X55)	6	
11	09117-10039	BOLT (10X80)	1	
12	09160-06085	WASHER (6.5X15X1)	1	
13	09168-10022	GASKET (10X17X1.5)	2	
14	09202-08006	PIN (8X12)	2	
15	09248-10008	PLUG (10X7.5)	2	
16	09355-40805-600	HOSE (4X8X600)	1	L:600->70
17	09362-09008	UNION	1	
18	09407-10404	CLAMP (L:100)	2	
19-1	58100-87LA0-019	PROPELLER (3X14X13) (BLACK)	1	
19-2	58100-87LB0-019	PROPELLER (3X13.875X15) (BLACK)	1	
19-3	58100-87LC0-019	PROPELLER (3X13.75X17) (BLACK)	1	
19-4	58100-87LJ0-019	PROPELLER (3X13.75X12) (BLACK)	1	
19-5	58100-87LH0-019	PROPELLER (3X14X11) (BALCK)	1	
19-6	58100-87LG1-019	PROPELLER (3X14X9) (BALCK)	1	
20	58105-90J00	.BUSH	1	
21	57633-90J02	SPACER, PROPELLER NUT	1	
22	57635-90J01	STOPPER, PROPELLER BUSH	1	
23	09141-18005	NUT	1	
24	09160-18028	WASHER (18.5X31X1)	1	
25	09204-03003	COTTER PIN (D:3.6,L:25)	1	
26	57630-90J00	KIT, PROPELLER NUT	1	OPT
27	55300-95500	ZINK ASSY, PROTECTION	1	OPT
28	55181-95200	ATTACHMENT, FLUSH HOSE	1	OPT

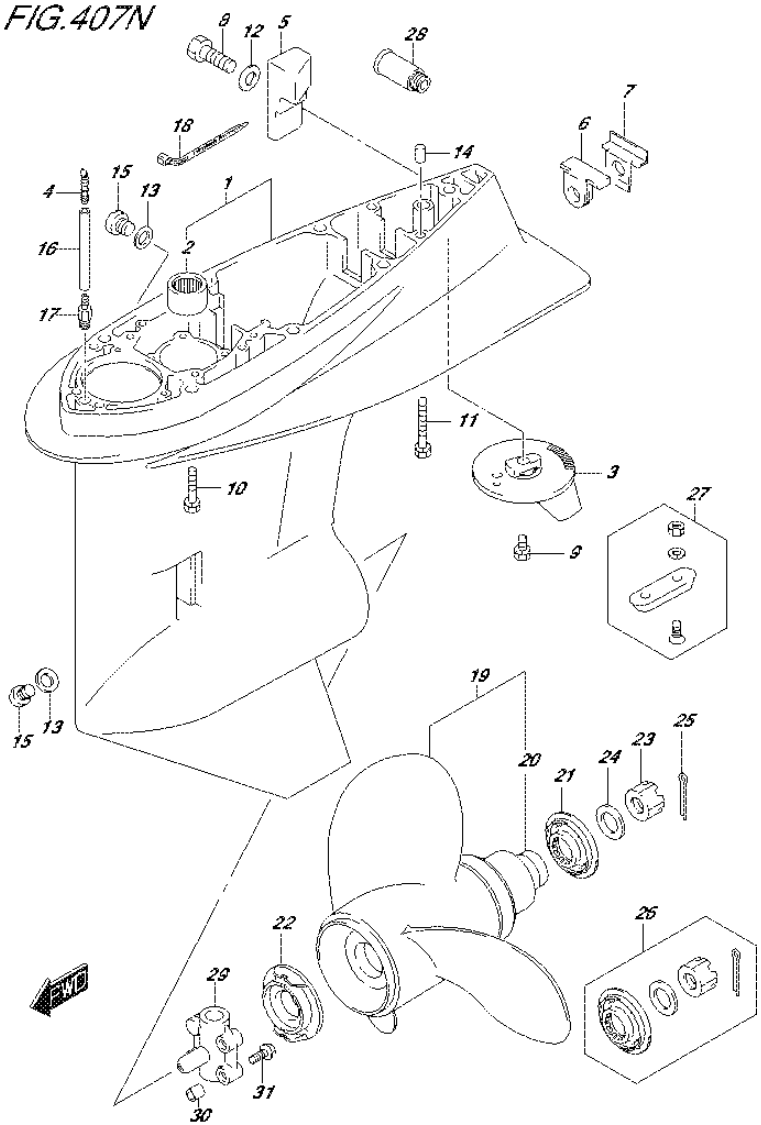

FIG.407N (3-I-10) GEAR CASE (DF50AVT E01)

REF NO.	PART NO.	DESCRIPTION	Q'TY	REMARKS
29	56145-99E01	HOUSING, SHIFT CAM	1	
30	09206-09012	PIN (7.4X9X10)	2	
31	01550-06307	BOLT	3	
32	25700-99E00	SEALING KIT, GEAR CASE	1	OPT
				NOT ILLUSTRATED

DF60A_E01_016_407N
GEAR CASE

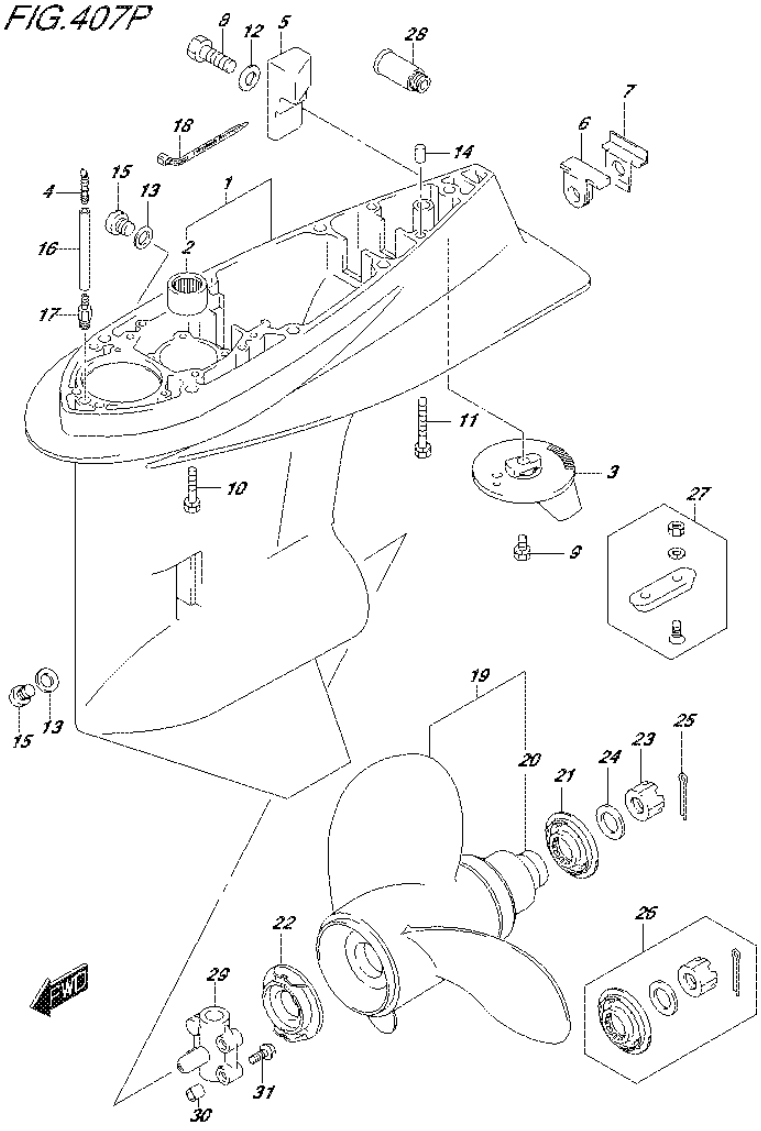

FIG.407P (3-I-11) GEAR CASE (DF50AVTH E01)

REF NO.	PART NO.	DESCRIPTION	Q'TY	REMARKS
1	55110-90J15-0EP	CASE, GEAR (BLACK)	1	
2	09263-28016	.BEARING (28.6X38X31.8)	1	
3	55125-90J01	TAB, TRIM	1	
4	55127-87D00	UNION, SPEEDOMETER HOSE	1	
5	55321-90J01	ANODE, GEAR CASE	1	
6	55332-87D11	RUBBER, EXHAUST SEAL	1	
7	55333-87D10	PLATE, EXHAUST SEAL	1	
8	09100-06131	BOLT (6X12)	1	
9	09116-08137	BOLT (8X22)	1	
10	09116-10150	BOLT (10X55)	6	
11	09117-10039	BOLT (10X80)	1	
12	09160-06085	WASHER (6.5X15X1)	1	
13	09168-10022	GASKET (10X17X1.5)	2	
14	09202-08006	PIN (8X12)	2	
15	09248-10008	PLUG (10X7.5)	2	
16	09355-40805-600	HOSE (4X8X600)	1	L:600->70
17	09362-09008	UNION	1	
18	09407-10404	CLAMP (L:100)	2	
19-1	58100-87LA0-019	PROPELLER (3X14X13) (BLACK)	1	
19-2	58100-87LB0-019	PROPELLER (3X13.875X15) (BLACK)	1	
19-3	58100-87LC0-019	PROPELLER (3X13.75X17) (BLACK)	1	
19-4	58100-87LJ0-019	PROPELLER (3X13.75X12) (BLACK)	1	
19-5	58100-87LH0-019	PROPELLER (3X14X11) (BALCK)	1	
19-6	58100-87LG1-019	PROPELLER (3X14X9) (BALCK)	1	
20	58105-90J00	.BUSH	1	
21	57633-90J02	SPACER, PROPELLER NUT	1	
22	57635-90J01	STOPPER, PROPELLER BUSH	1	
23	09141-18005	NUT	1	
24	09160-18028	WASHER (18.5X31X1)	1	
25	09204-03003	COTTER PIN (D:3.6,L:25)	1	
26	57630-90J00	KIT, PROPELLER NUT	1	OPT
27	55300-95500	ZINK ASSY, PROTECTION	1	OPT
28	55181-95200	ATTACHMENT, FLUSH HOSE	1	OPT

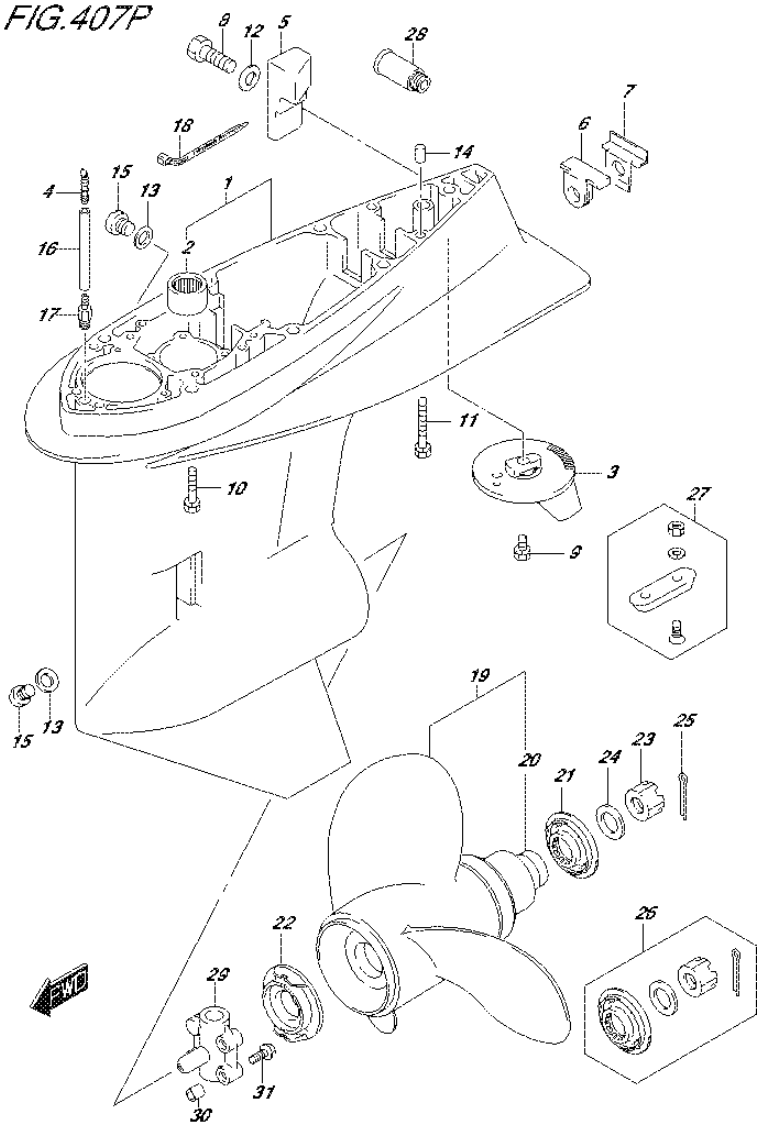

FIG.407P (3-I-12) GEAR CASE (DF50AVTH E01)

REF NO.	PART NO.	DESCRIPTION	Q'TY	REMARKS
29	56145-99E01	HOUSING, SHIFT CAM	1	
30	09206-09012	PIN (7.4X9X10)	2	
31	01550-06307	BOLT	3	
32	25700-99E00	SEALING KIT, GEAR CASE	1	OPT
				NOT ILLUSTRATED

DF60A_E01_016_407P
GEAR CASE

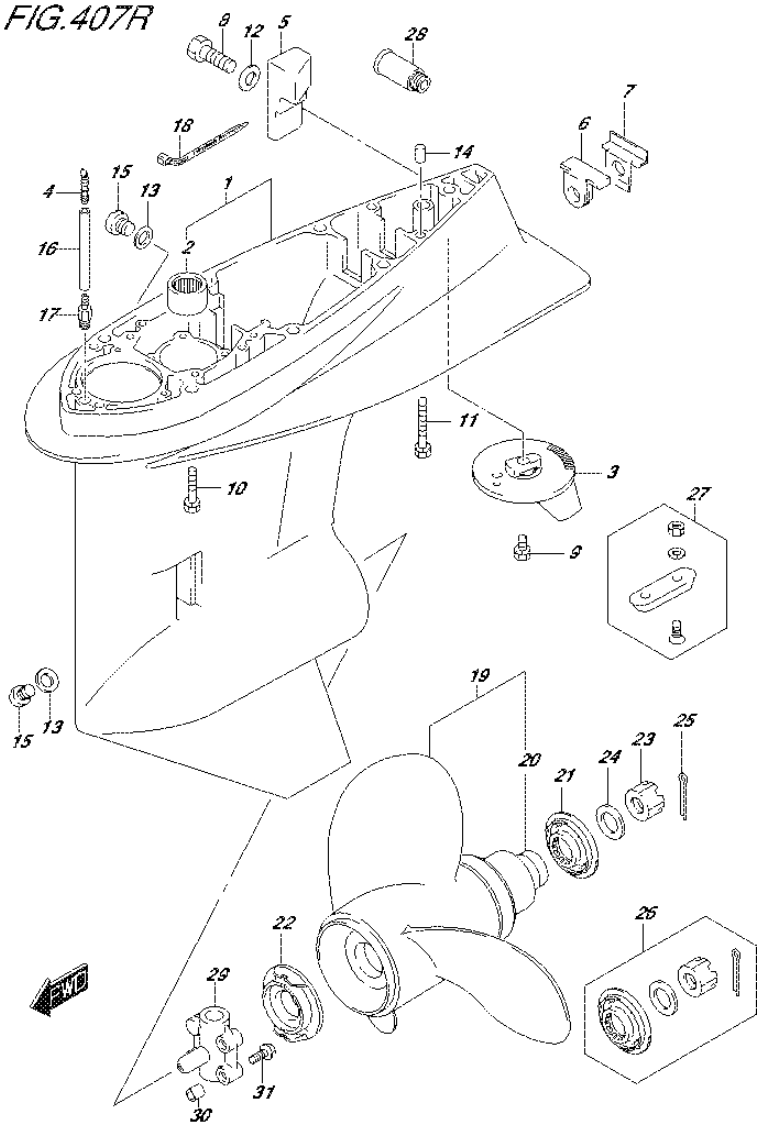

FIG.407R (3-I-13) GEAR CASE (DF60AVT E01)

REF NO.	PART NO.	DESCRIPTION	Q'TY	REMARKS
1	55110-90J15-0EP	CASE, GEAR (BLACK)	1	
2	09263-28016	.BEARING (28.6X38X31.8)	1	
3	55125-90J01	TAB, TRIM	1	
4	55127-87D00	UNION, SPEEDOMETER HOSE	1	
5	55321-90J01	ANODE, GEAR CASE	1	
6	55332-87D11	RUBBER, EXHAUST SEAL	1	
7	55333-87D10	PLATE, EXHAUST SEAL	1	
8	09100-06131	BOLT (6X12)	1	
9	09116-08137	BOLT (8X22)	1	
10	09116-10150	BOLT (10X55)	6	
11	09117-10039	BOLT (10X80)	1	
12	09160-06085	WASHER (6.5X15X1)	1	
13	09168-10022	GASKET (10X17X1.5)	2	
14	09202-08006	PIN (8X12)	2	
15	09248-10008	PLUG (10X7.5)	2	
16	09355-40805-600	HOSE (4X8X600)	1	L:600->70
17	09362-09008	UNION	1	
18	09407-10404	CLAMP (L:100)	2	
19-1	58100-87LA0-019	PROPELLER (3X14X13) (BLACK)	1	
19-2	58100-87LB0-019	PROPELLER (3X13.875X15) (BLACK)	1	
19-3	58100-87LC0-019	PROPELLER (3X13.75X17) (BLACK)	1	
19-4	58100-87LJ0-019	PROPELLER (3X13.75X12) (BLACK)	1	
19-5	58100-87LH0-019	PROPELLER (3X14X11) (BALCK)	1	
19-6	58100-87LG1-019	PROPELLER (3X14X9) (BALCK)	1	
20	58105-90J00	.BUSH	1	
21	57633-90J02	SPACER, PROPELLER NUT	1	
22	57635-90J01	STOPPER, PROPELLER BUSH	1	
23	09141-18005	NUT	1	
24	09160-18028	WASHER (18.5X31X1)	1	
25	09204-03003	COTTER PIN (D:3.6,L:25)	1	
26	57630-90J00	KIT, PROPELLER NUT	1	OPT
27	55300-95500	ZINK ASSY, PROTECTION	1	OPT
28	55181-95200	ATTACHMENT, FLUSH HOSE	1	OPT

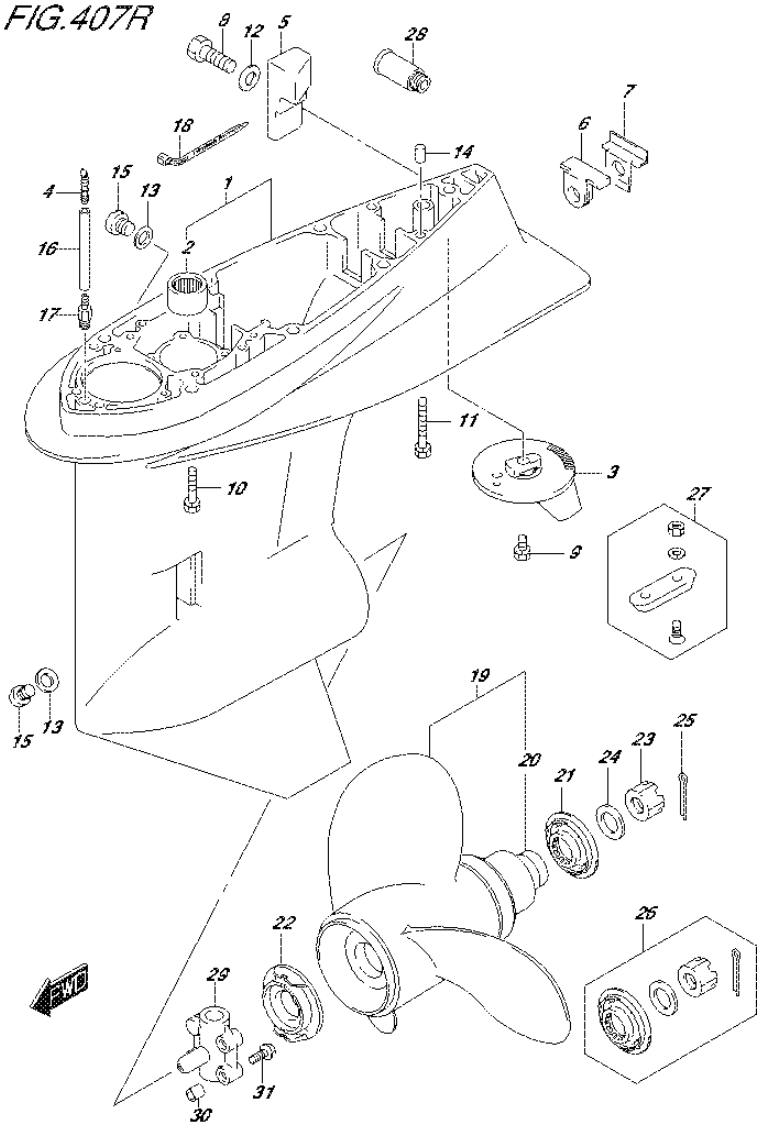

FIG.407R (3-I-14) GEAR CASE (DF60AVT E01)

REF NO.	PART NO.	DESCRIPTION	Q'TY	REMARKS
29	56145-99E01	HOUSING, SHIFT CAM	1	
30	09206-09012	PIN (7.4X9X10)	2	
31	01550-06307	BOLT	3	
32	25700-99E00	SEALING KIT, GEAR CASE	1	OPT
				NOT ILLUSTRATED

DF60A_E01_016_407R
GEAR CASE

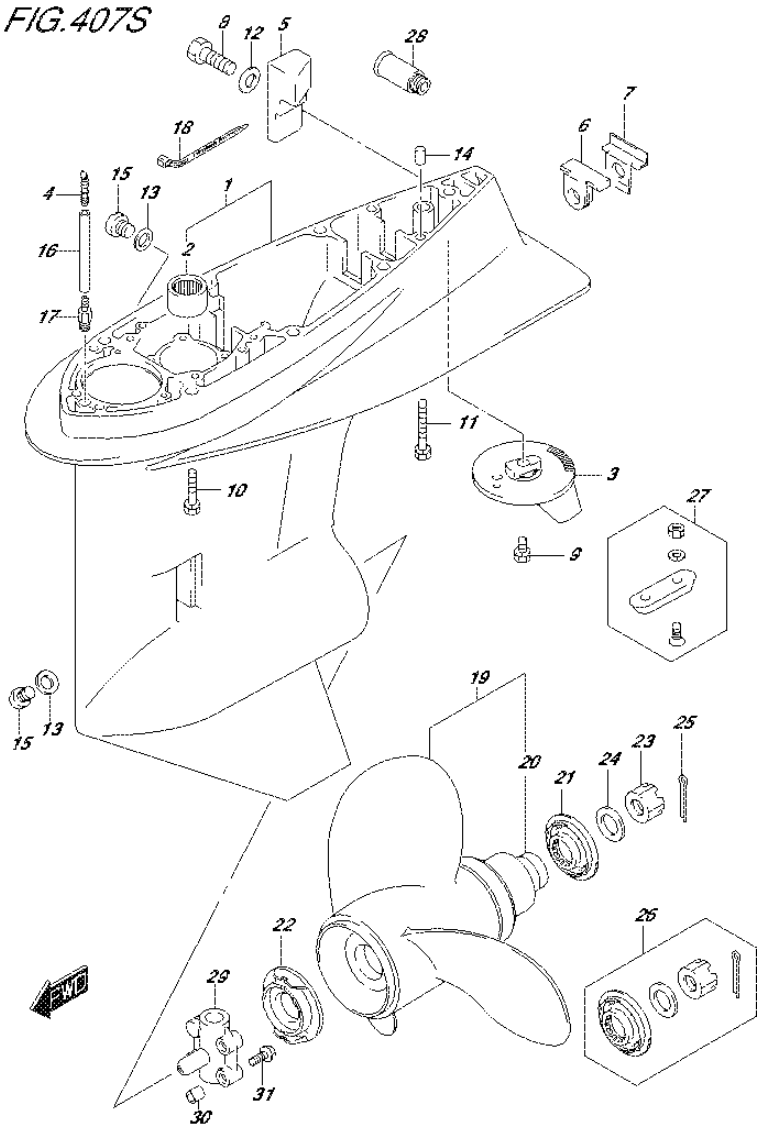

FIG.407S (3-I-15) GEAR CASE (DF60AVT E40)

REF NO.	PART NO.	DESCRIPTION	Q'TY	REMARKS
1	55110-90J15-0EP	CASE, GEAR (BLACK)	1	
2	09263-28016	.BEARING (28.6X38X31.8)	1	
3	55125-90J01	TAB, TRIM	1	
4	55127-87D00	UNION, SPEEDOMETER HOSE	1	
5	55321-90J01	ANODE, GEAR CASE	1	
6	55332-87D11	RUBBER, EXHAUST SEAL	1	
7	55333-87D10	PLATE, EXHAUST SEAL	1	
8	09100-06131	BOLT (6X12)	1	
9	09116-08137	BOLT (8X22)	1	
10	09116-10150	BOLT (10X55)	6	
11	09117-10039	BOLT (10X80)	1	
12	09160-06085	WASHER (6.5X15X1)	1	
13	09168-10022	GASKET (10X17X1.5)	2	
14	09202-08006	PIN (8X12)	2	
15	09248-10008	PLUG (10X7.5)	2	
16	09355-40805-600	HOSE (4X8X600)	1	L:600->70
17	09362-09008	UNION	1	
18	09407-10404	CLAMP (L:100)	2	
19-1	58100-87LA0-019	PROPELLER (3X14X13) (BLACK)	1	
19-2	58100-87LB0-019	PROPELLER (3X13.875X15) (BLACK)	1	
19-3	58100-87LC0-019	PROPELLER (3X13.75X17) (BLACK)	1	
19-4	58100-87LJ0-019	PROPELLER (3X13.75X12) (BLACK)	1	
19-5	58100-87LH0-019	PROPELLER (3X14X11) (BALCK)	1	
19-6	58100-87LG1-019	PROPELLER (3X14X9) (BALCK)	1	
20	58105-90J00	.BUSH	1	
21	57633-90J02	SPACER, PROPELLER NUT	1	
22	57635-90J01	STOPPER, PROPELLER BUSH	1	
23	09141-18005	NUT	1	
24	09160-18028	WASHER (18.5X31X1)	1	
25	09204-03003	COTTER PIN (D:3.6,L:25)	1	
26	57630-90J00	KIT, PROPELLER NUT	1	OPT
27	55300-95500	ZINK ASSY, PROTECTION	1	OPT
28	55181-95200	ATTACHMENT, FLUSH HOSE	1	OPT

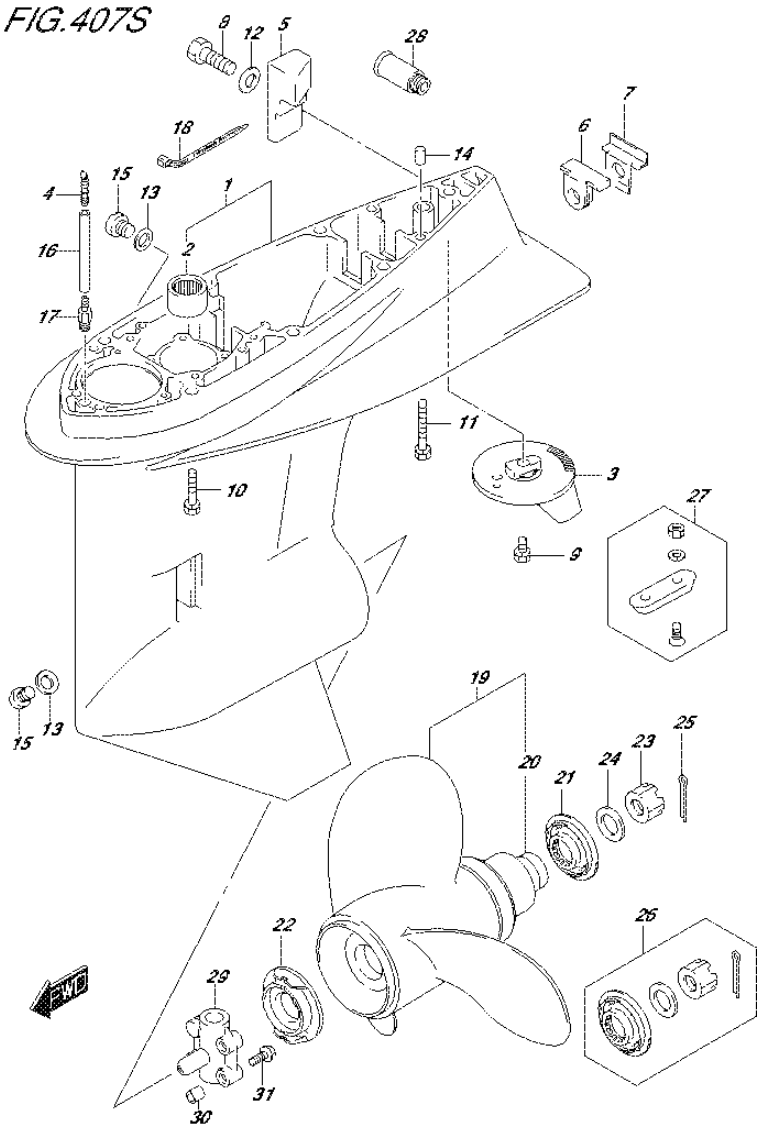

FIG.407S (3-J-2) GEAR CASE (DF60AVT E40)

REF NO.	PART NO.	DESCRIPTION	Q'TY	REMARKS
29	56145-99E01	HOUSING, SHIFT CAM	1	
30	09206-09012	PIN (7.4X9X10)	2	
31	01550-06307	BOLT	3	
32	25700-99E00	SEALING KIT, GEAR CASE	1	OPT
				NOT ILLUSTRATED

DF60A_E01_016_407S
GEAR CASE

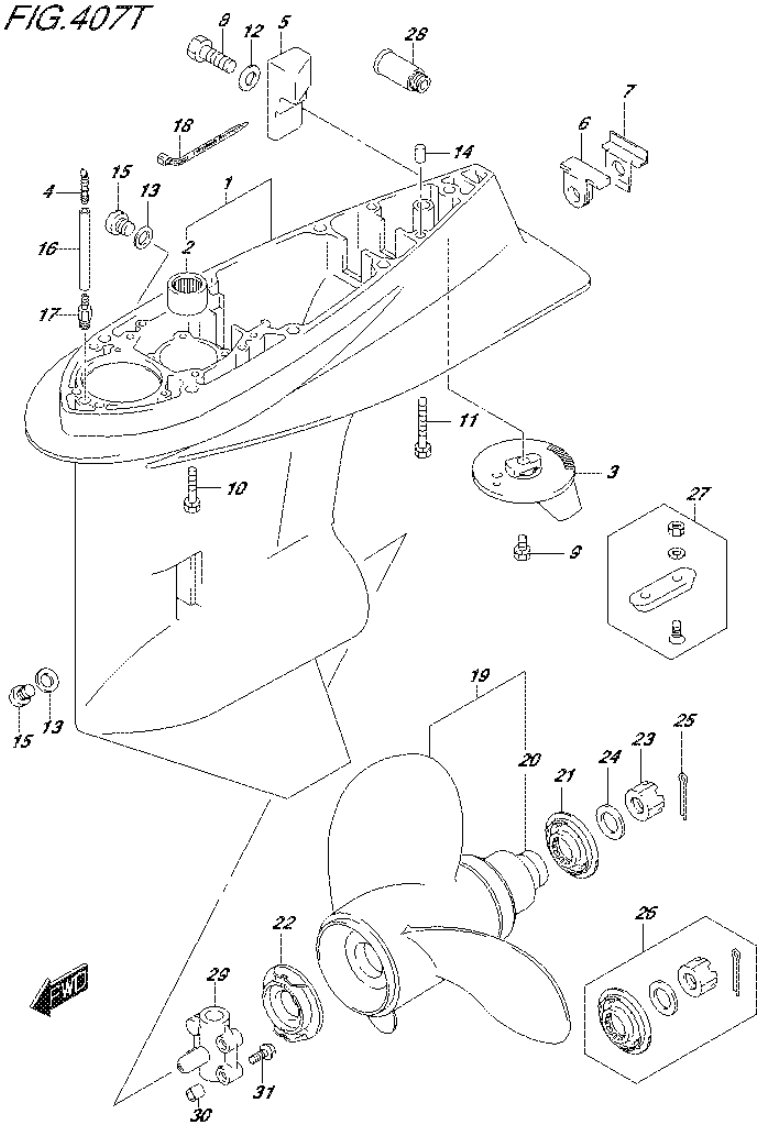

FIG.407T (3-J-3) GEAR CASE (DF60AVTH E01)

REF NO.	PART NO.	DESCRIPTION	Q'TY	REMARKS
1	55110-90J15-0EP	CASE, GEAR (BLACK)	1	
2	09263-28016	.BEARING (28.6X38X31.8)	1	
3	55125-90J01	TAB, TRIM	1	
4	55127-87D00	UNION, SPEEDOMETER HOSE	1	
5	55321-90J01	ANODE, GEAR CASE	1	
6	55332-87D11	RUBBER, EXHAUST SEAL	1	
7	55333-87D10	PLATE, EXHAUST SEAL	1	
8	09100-06131	BOLT (6X12)	1	
9	09116-08137	BOLT (8X22)	1	
10	09116-10150	BOLT (10X55)	6	
11	09117-10039	BOLT (10X80)	1	
12	09160-06085	WASHER (6.5X15X1)	1	
13	09168-10022	GASKET (10X17X1.5)	2	
14	09202-08006	PIN (8X12)	2	
15	09248-10008	PLUG (10X7.5)	2	
16	09355-40805-600	HOSE (4X8X600)	1	L:600->70
17	09362-09008	UNION	1	
18	09407-10404	CLAMP (L:100)	2	
19-1	58100-87LA0-019	PROPELLER (3X14X13) (BLACK)	1	
19-2	58100-87LB0-019	PROPELLER (3X13.875X15) (BLACK)	1	
19-3	58100-87LC0-019	PROPELLER (3X13.75X17) (BLACK)	1	
19-4	58100-87LJ0-019	PROPELLER (3X13.75X12) (BLACK)	1	
19-5	58100-87LH0-019	PROPELLER (3X14X11) (BALCK)	1	
19-6	58100-87LG1-019	PROPELLER (3X14X9) (BALCK)	1	
20	58105-90J00	.BUSH	1	
21	57633-90J02	SPACER, PROPELLER NUT	1	
22	57635-90J01	STOPPER, PROPELLER BUSH	1	
23	09141-18005	NUT	1	
24	09160-18028	WASHER (18.5X31X1)	1	
25	09204-03003	COTTER PIN (D:3.6,L:25)	1	
26	57630-90J00	KIT, PROPELLER NUT	1	OPT
27	55300-95500	ZINK ASSY, PROTECTION	1	OPT
28	55181-95200	ATTACHMENT, FLUSH HOSE	1	OPT

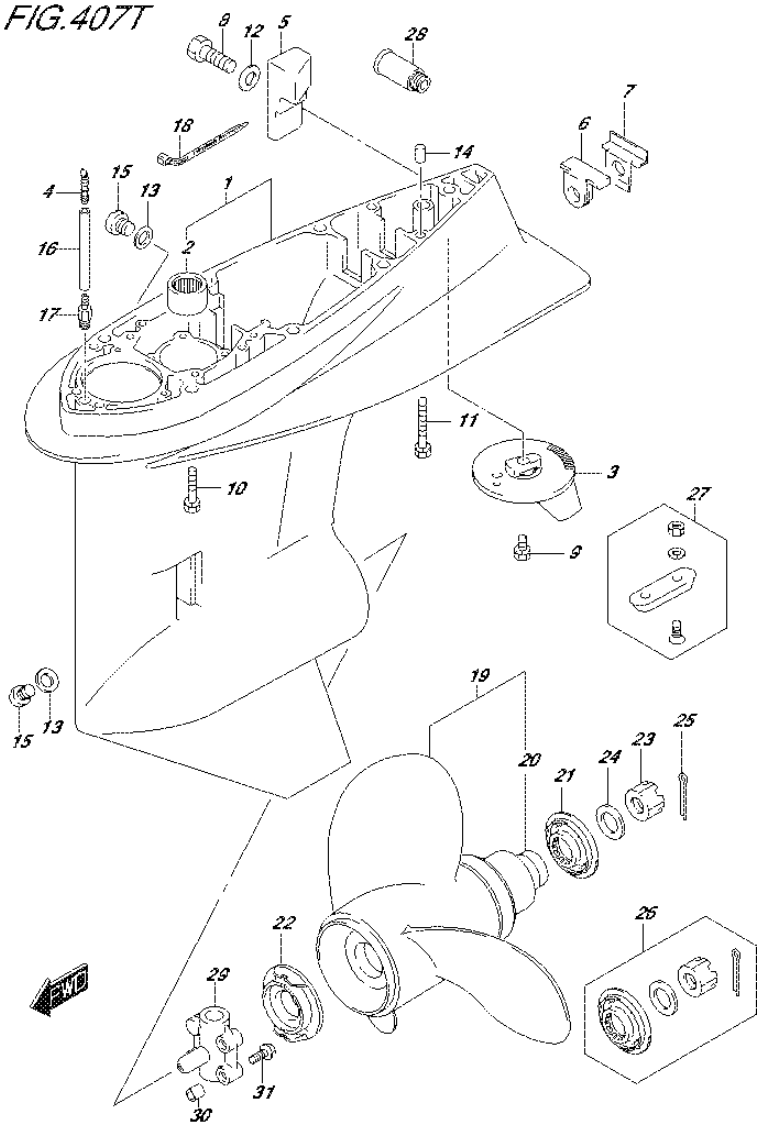

FIG.407T (3-J-4) GEAR CASE (DF60AVTH E01)

REF NO.	PART NO.	DESCRIPTION	Q'TY	REMARKS
29	56145-99E01	HOUSING, SHIFT CAM	1	
30	09206-09012	PIN (7.4X9X10)	2	
31	01550-06307	BOLT	3	
32	25700-99E00	SEALING KIT, GEAR CASE	1	OPT
				NOT ILLUSTRATED

DF60A_E01_016_407T
GEAR CASE

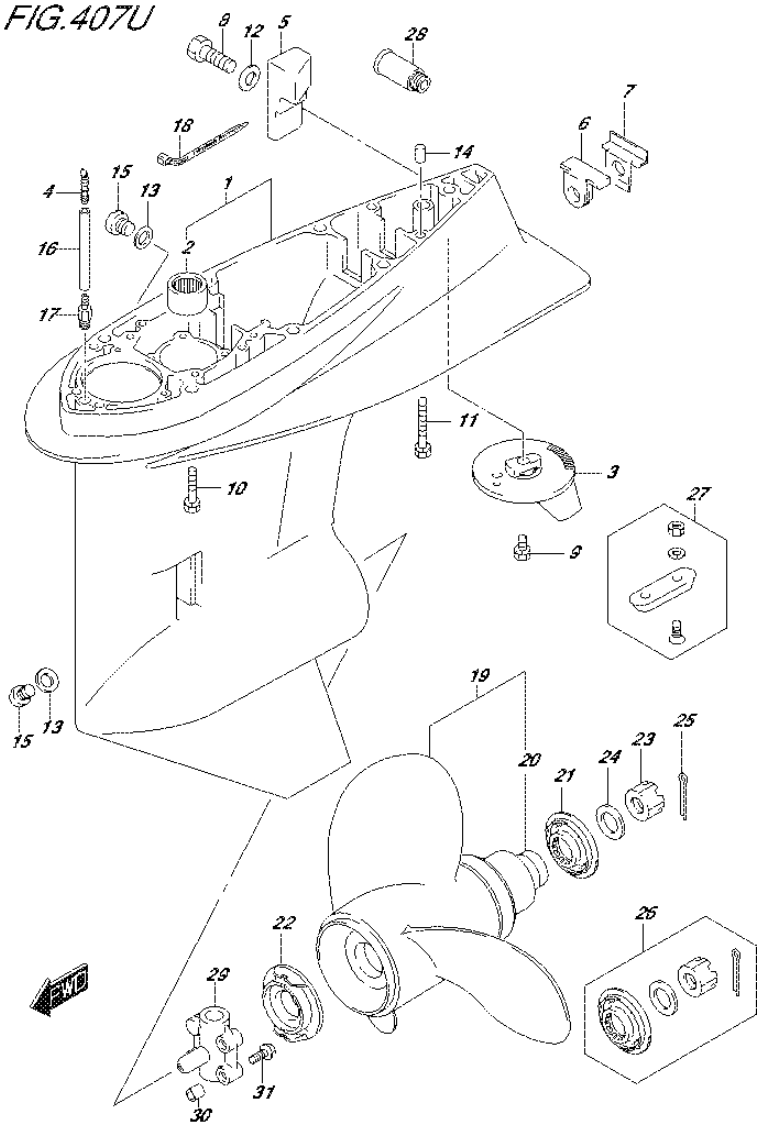

FIG.407U (3-J-5) GEAR CASE (DF60AVTH E40)

REF NO.	PART NO.	DESCRIPTION	Q'TY	REMARKS
1	55110-90J15-0EP	CASE, GEAR (BLACK)	1	
2	09263-28016	.BEARING (28.6X38X31.8)	1	
3	55125-90J01	TAB, TRIM	1	
4	55127-87D00	UNION, SPEEDOMETER HOSE	1	
5	55321-90J01	ANODE, GEAR CASE	1	
6	55332-87D11	RUBBER, EXHAUST SEAL	1	
7	55333-87D10	PLATE, EXHAUST SEAL	1	
8	09100-06131	BOLT (6X12)	1	
9	09116-08137	BOLT (8X22)	1	
10	09116-10150	BOLT (10X55)	6	
11	09117-10039	BOLT (10X80)	1	
12	09160-06085	WASHER (6.5X15X1)	1	
13	09168-10022	GASKET (10X17X1.5)	2	
14	09202-08006	PIN (8X12)	2	
15	09248-10008	PLUG (10X7.5)	2	
16	09355-40805-600	HOSE (4X8X600)	1	L:600->70
17	09362-09008	UNION	1	
18	09407-10404	CLAMP (L:100)	2	
19-1	58100-87LA0-019	PROPELLER (3X14X13) (BLACK)	1	
19-2	58100-87LB0-019	PROPELLER (3X13.875X15) (BLACK)	1	
19-3	58100-87LC0-019	PROPELLER (3X13.75X17) (BLACK)	1	
19-4	58100-87LJ0-019	PROPELLER (3X13.75X12) (BLACK)	1	
19-5	58100-87LH0-019	PROPELLER (3X14X11) (BALCK)	1	
19-6	58100-87LG1-019	PROPELLER (3X14X9) (BALCK)	1	
20	58105-90J00	.BUSH	1	
21	57633-90J02	SPACER, PROPELLER NUT	1	
22	57635-90J01	STOPPER, PROPELLER BUSH	1	
23	09141-18005	NUT	1	
24	09160-18028	WASHER (18.5X31X1)	1	
25	09204-03003	COTTER PIN (D:3.6,L:25)	1	
26	57630-90J00	KIT, PROPELLER NUT	1	OPT
27	55300-95500	ZINK ASSY, PROTECTION	1	OPT
28	55181-95200	ATTACHMENT, FLUSH HOSE	1	OPT

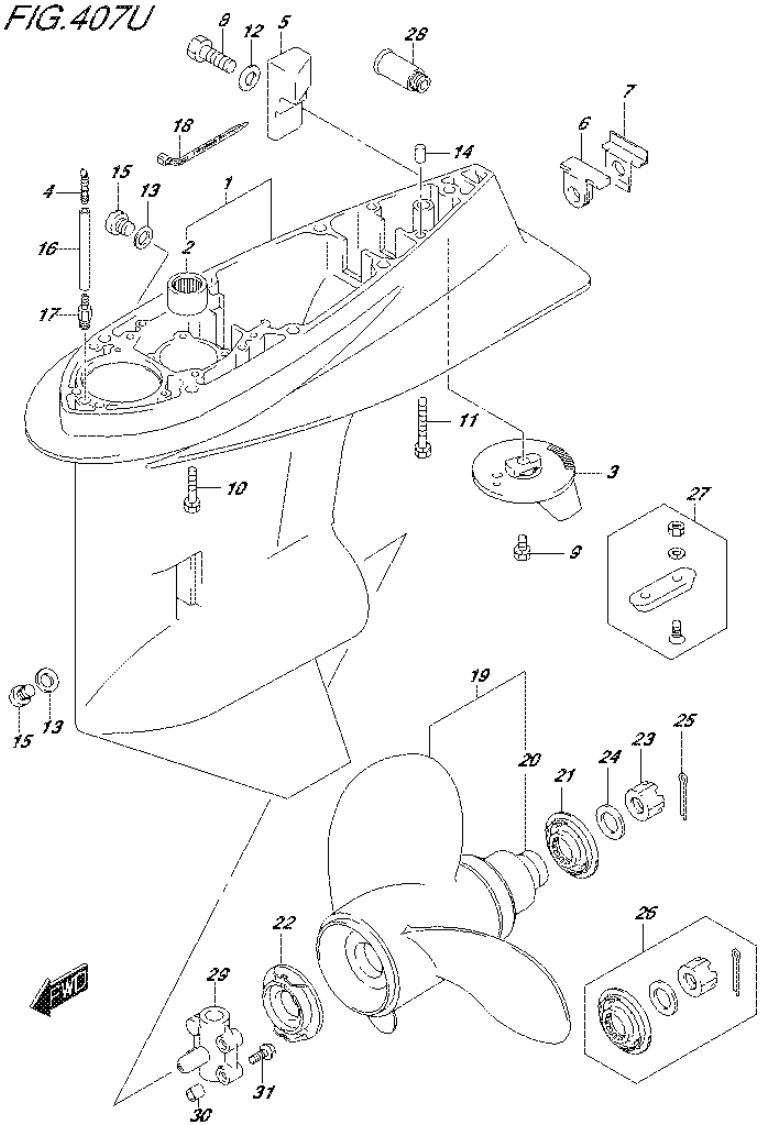

FIG.407U (3-J-6) GEAR CASE (DF60AVTH E40)

REF NO.	PART NO.	DESCRIPTION	Q'TY	REMARKS
29	56145-99E01	HOUSING, SHIFT CAM	1	
30	09206-09012	PIN (7.4X9X10)	2	
31	01550-06307	BOLT	3	
32	25700-99E00	SEALING KIT, GEAR CASE	1	OPT
				NOT ILLUSTRATED

DF60A_E01_016_407U
GEAR CASE

FIG.410A

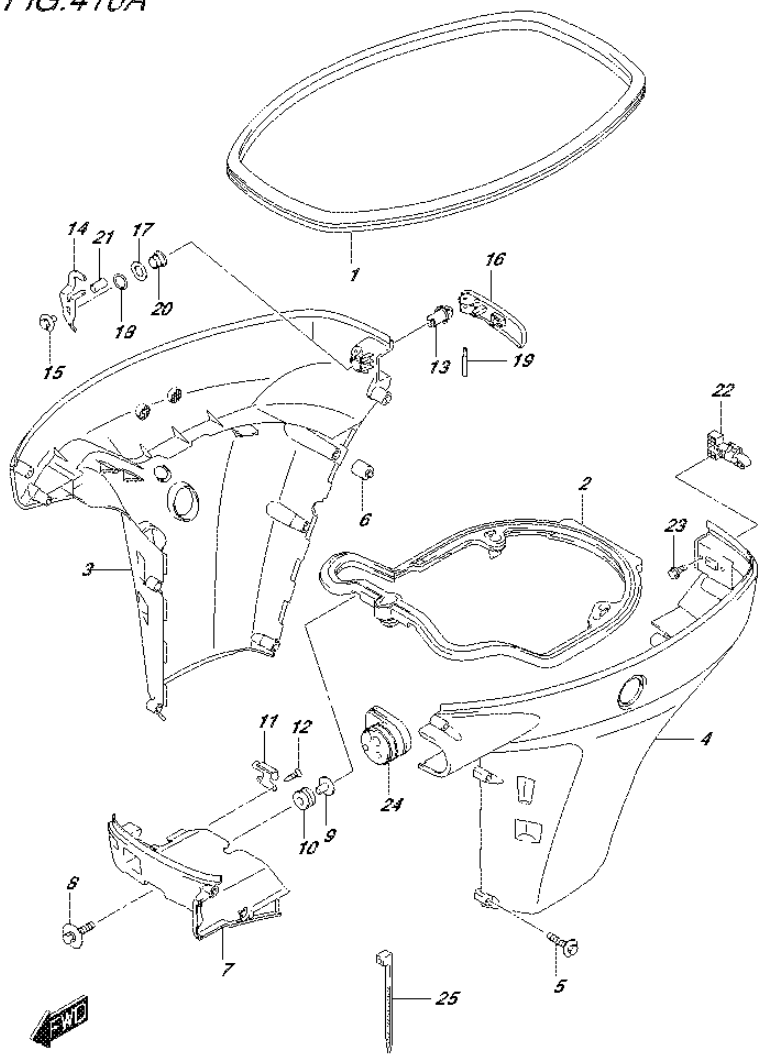

FIG.410A (3-J-7) SIDE COVER (DF40A E01)

REF NO.	PART NO.	DESCRIPTION	Q'TY	REMARKS
1	61112-88L10	RUBBER, SIDE COVER	1	
2	61134-88L10	SEAL, SIDE COVER	1	
3-1	61811-88L30-0EP	COVER, SIDE STBD (S) (BLACK)	1	W/TRANSOM(S)
3-2	61811-88L30-Y5S	COVER, SIDE STBD (S) (WHITE)	1	W/TRANSOM(S)
3-3	61811-88L20-0EP	COVER, SIDE STBD (BLACK)	1	W/TRANSOM(L)
				W/TRANSOM(X)
3-4	61811-88L20-Y5S	COVER, SIDE STBD (WHITE)	1	W/TRANSOM(L)
				W/TRANSOM(X)
4-1	61821-88L30-0EP	COVER, SIDE PORT (S) (BLACK)	1	W/TRANSOM(S)
4-2	61821-88L30-Y5S	COVER, SIDE PORT (S) (WHITE)	1	W/TRANSOM(S)
4-3	61821-88L20-0EP	COVER, SIDE PORT (BLACK)	1	W/TRANSOM(L)
				W/TRANSOM(X)
4-4	61821-88L20-Y5S	COVER, SIDE PORT (WHITE)	1	W/TRANSOM(L)
				W/TRANSOM(X)
5-1	09136-06148	SCREW (6X35)	9	W/TRANSOM(S)
5-2	09136-06148	SCREW (6X35)	10	W/TRANSOM(L)
				W/TRANSOM(X)
6	61151-88L00	CUSHION, SIDE COVER	1	
7-1	61831-88L10-0EP	PANEL, FRONT (BLACK)	1	
7-2	61831-88L10-Y5S	PANEL, FRONT (WHITE)	1	
8	09116-08163	BOLT (8X38)	2	
9	09169-08039	WASHER	2	
10	09320-11013	CUSHION	2	
11	61412-88L00	HOOK, FRONT PANEL	1	
12	03542-05169	SCREW	2	
13	61632-93J00	SHAFT, ENGINE COVER HOOK	1	
14	61641-88L00	HOOK, ENGINE COVER	1	
15	09116-06127	BOLT (6X12)	1	
16	61633-88L00	LEVER, HOOK REAR	1	
17	09160-13014	WASHER (13.2X25X1)	1	
18	09164-14008	WASHER	1	
19	09202-04022	PIN	1	
20	09306-13007	BUSH	1	
21	09352-50901-600	HOSE (5X9X600)	1	L:600->20

FIG.410A

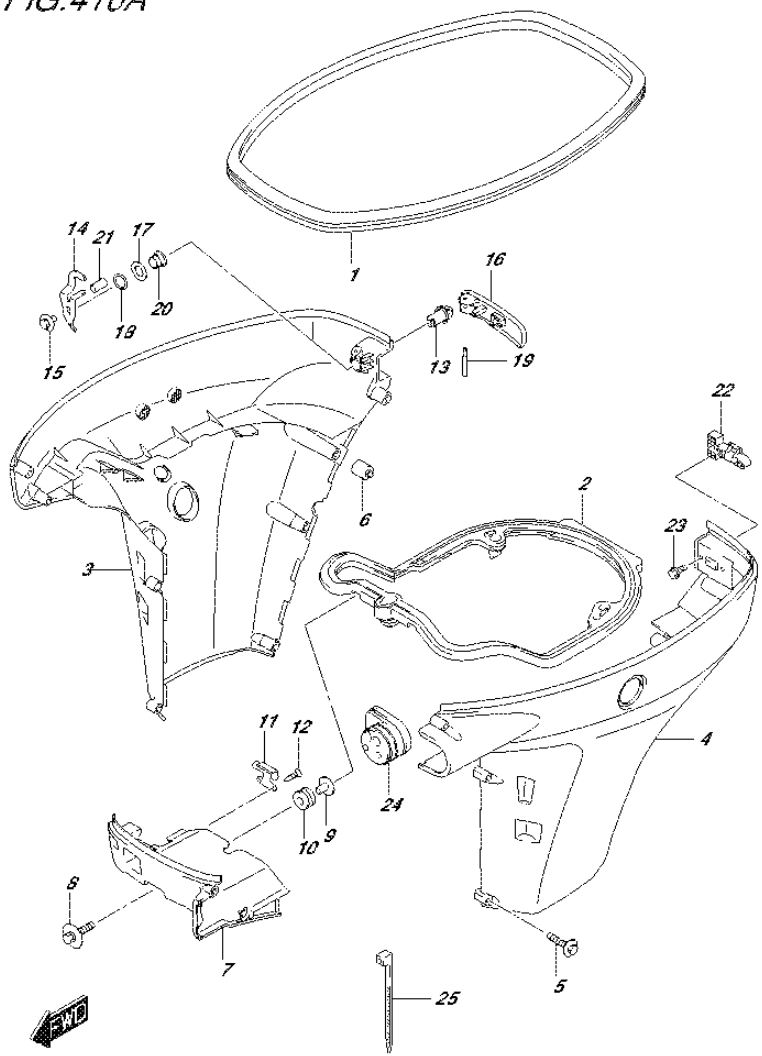

FIG.410A (3-J-8) SIDE COVER (DF40A E01)

REF NO.	PART NO.	DESCRIPTION	Q'TY	REMARKS
22	61673-93J11	LATCH, HOOK LEVER	1	
23	09116-05010	BOLT (5X12)	2	
24	61124-88L10	GROMMET, REMOCON CABLE	1	
25	09407-25402	CLAMP (L:250)	1	

FIG.410B

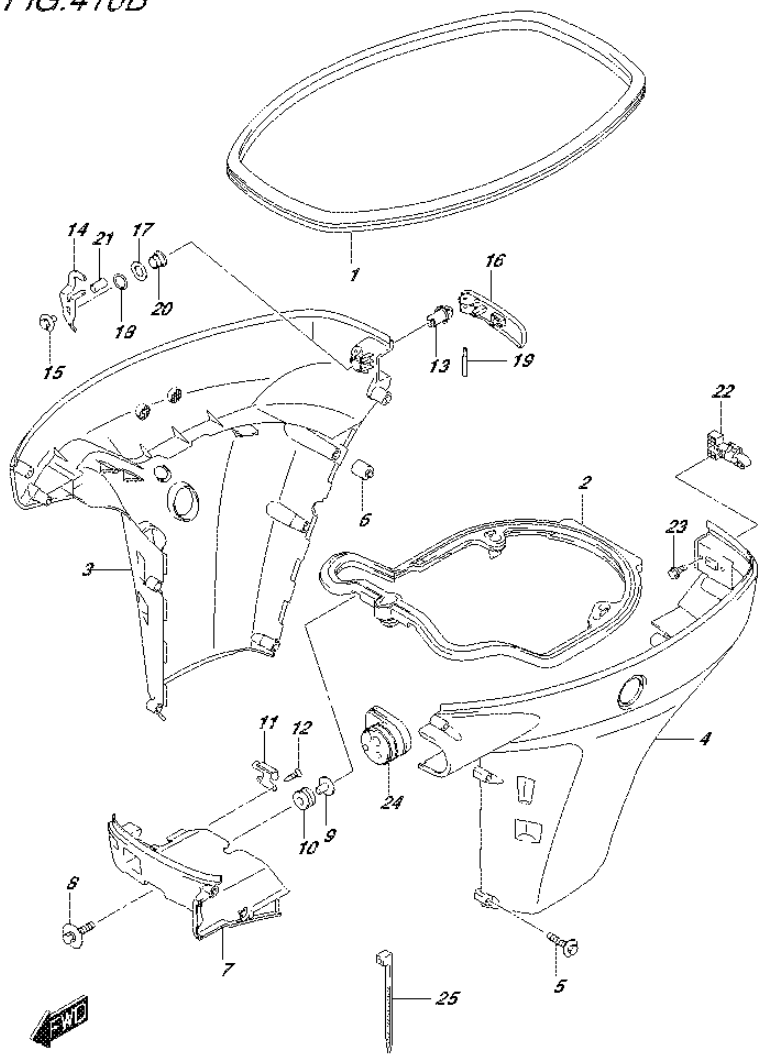

FIG.410B (3-J-9) SIDE COVER (DF40AQH E01)

REF NO.	PART NO.	DESCRIPTION	Q'TY	REMARKS
1	61112-88L10	RUBBER, SIDE COVER	1	
2	61134-88L10	SEAL, SIDE COVER	1	
3	61811-88L20-0EP	COVER, SIDE STBD (BLACK)	1	
4	61821-88L20-0EP	COVER, SIDE PORT (BLACK)	1	
5	09136-06148	SCREW (6X35)	10	
6	61151-88L00	CUSHION, SIDE COVER	1	
7	61831-88L10-0EP	PANEL, FRONT (BLACK)	1	
8	09116-08163	BOLT (8X38)	2	
9	09169-08039	WASHER	2	
10	09320-11013	CUSHION	2	
11	61412-88L00	HOOK, FRONT PANEL	1	
12	03542-05169	SCREW	2	
13	61632-93J00	SHAFT, ENGINE COVER HOOK	1	
14	61641-88L00	HOOK, ENGINE COVER	1	
15	09116-06127	BOLT (6X12)	1	
16	61633-88L00	LEVER, HOOK REAR	1	
17	09160-13014	WASHER (13.2X25X1)	1	
18	09164-14008	WASHER	1	
19	09202-04022	PIN	1	
20	09306-13007	BUSH	1	
21	09352-50901-600	HOSE (5X9X600)	1	L:600->20
22	61673-93J11	LATCH, HOOK LEVER	1	
23	09116-05010	BOLT (5X12)	2	
24	61124-88L10	GROMMET, REMOCON CABLE	1	
25	09407-25402	CLAMP (L:250)	1	

FIG.410C

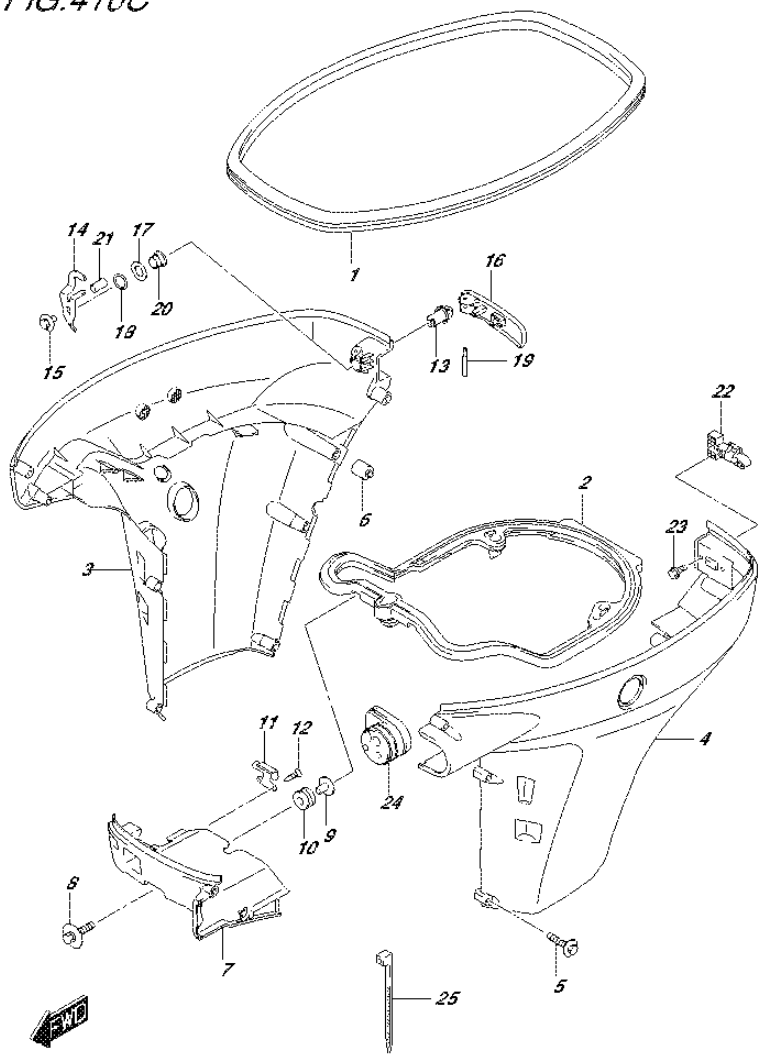

FIG.410C (3-J-10) SIDE COVER (DF40ATH E01)

REF NO.	PART NO.	DESCRIPTION	Q'TY	REMARKS
1	61112-88L10	RUBBER, SIDE COVER	1	
2	61134-88L10	SEAL, SIDE COVER	1	
3	61811-88L20-0EP	COVER, SIDE STBD (BLACK)	1	
4	61821-88L20-0EP	COVER, SIDE PORT (BLACK)	1	
5	09136-06148	SCREW (6X35)	10	
6	61151-88L00	CUSHION, SIDE COVER	1	
7	61831-88L10-0EP	PANEL, FRONT (BLACK)	1	
8	09116-08163	BOLT (8X38)	2	
9	09169-08039	WASHER	2	
10	09320-11013	CUSHION	2	
11	61412-88L00	HOOK, FRONT PANEL	1	
12	03542-05169	SCREW	2	
13	61632-93J00	SHAFT, ENGINE COVER HOOK	1	
14	61641-88L00	HOOK, ENGINE COVER	1	
15	09116-06127	BOLT (6X12)	1	
16	61633-88L00	LEVER, HOOK REAR	1	
17	09160-13014	WASHER (13.2X25X1)	1	
18	09164-14008	WASHER	1	
19	09202-04022	PIN	1	
20	09306-13007	BUSH	1	
21	09352-50901-600	HOSE (5X9X600)	1	L:600->20
22	61673-93J11	LATCH, HOOK LEVER	1	
23	09116-05010	BOLT (5X12)	2	
24	61124-88L10	GROMMET, REMOCON CABLE	1	
25	09407-25402	CLAMP (L:250)	1	

FIG.410D

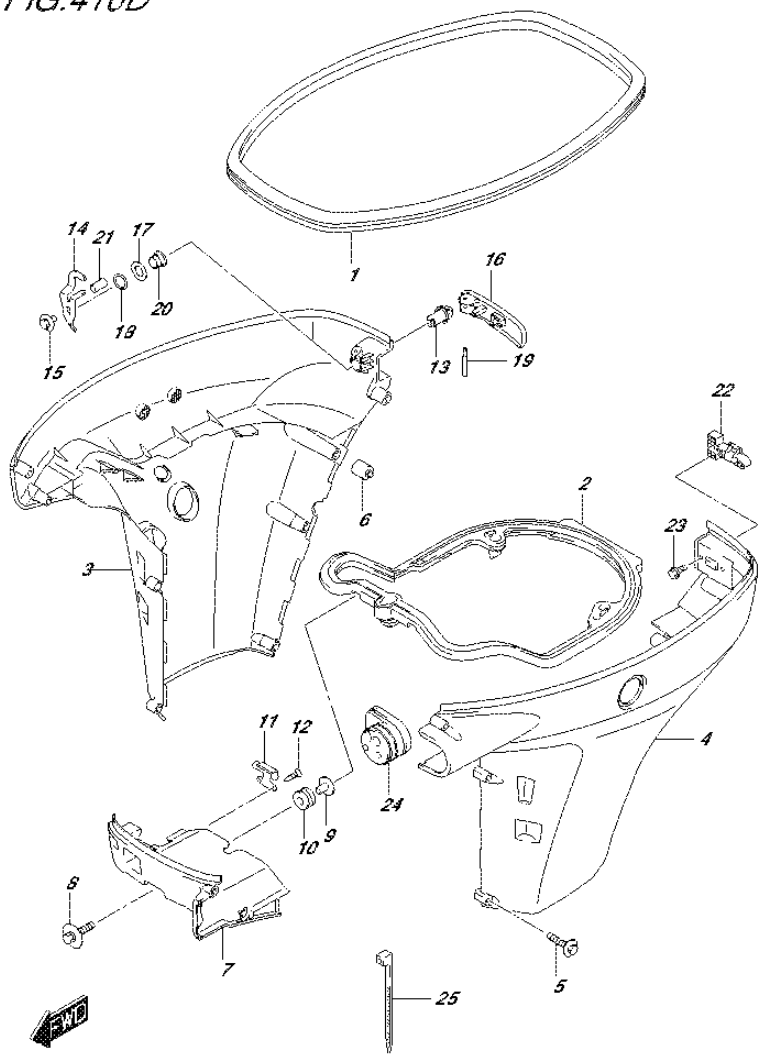

FIG.410D (3-J-11) SIDE COVER (DF40AST E34)

REF NO.	PART NO.	DESCRIPTION	Q'TY	REMARKS
1	61112-88L10	RUBBER, SIDE COVER	1	
2	61134-88L10	SEAL, SIDE COVER	1	
3-1	61811-88L30-0EP	COVER, SIDE STBD (S) (BLACK)	1	W/TRANSOM(S)
3-2	61811-88L30-Y5S	COVER, SIDE STBD (S) (WHITE)	1	W/TRANSOM(S)
3-3	61811-88L20-0EP	COVER, SIDE STBD (BLACK)	1	W/TRANSOM(L)
				W/TRANSOM(X)
3-4	61811-88L20-Y5S	COVER, SIDE STBD (WHITE)	1	W/TRANSOM(L)
				W/TRANSOM(X)
4-1	61821-88L30-0EP	COVER, SIDE PORT (S) (BLACK)	1	W/TRANSOM(S)
4-2	61821-88L30-Y5S	COVER, SIDE PORT (S) (WHITE)	1	W/TRANSOM(S)
4-3	61821-88L20-0EP	COVER, SIDE PORT (BLACK)	1	W/TRANSOM(L)
				W/TRANSOM(X)
4-4	61821-88L20-Y5S	COVER, SIDE PORT (WHITE)	1	W/TRANSOM(L)
				W/TRANSOM(X)
5-1	09136-06148	SCREW (6X35)	9	W/TRANSOM(S)
5-2	09136-06148	SCREW (6X35)	10	W/TRANSOM(L)
				W/TRANSOM(X)
6	61151-88L00	CUSHION, SIDE COVER	1	
7-1	61831-88L10-0EP	PANEL, FRONT (BLACK)	1	
7-2	61831-88L10-Y5S	PANEL, FRONT (WHITE)	1	
8	09116-08163	BOLT (8X38)	2	
9	09169-08039	WASHER	2	
10	09320-11013	CUSHION	2	
11	61412-88L00	HOOK, FRONT PANEL	1	
12	03542-05169	SCREW	2	
13	61632-93J00	SHAFT, ENGINE COVER HOOK	1	
14	61641-88L00	HOOK, ENGINE COVER	1	
15	09116-06127	BOLT (6X12)	1	
16	61633-88L00	LEVER, HOOK REAR	1	
17	09160-13014	WASHER (13.2X25X1)	1	
18	09164-14008	WASHER	1	
19	09202-04022	PIN	1	
20	09306-13007	BUSH	1	
21	09352-50901-600	HOSE (5X9X600)	1	L:600->20

FIG.410D

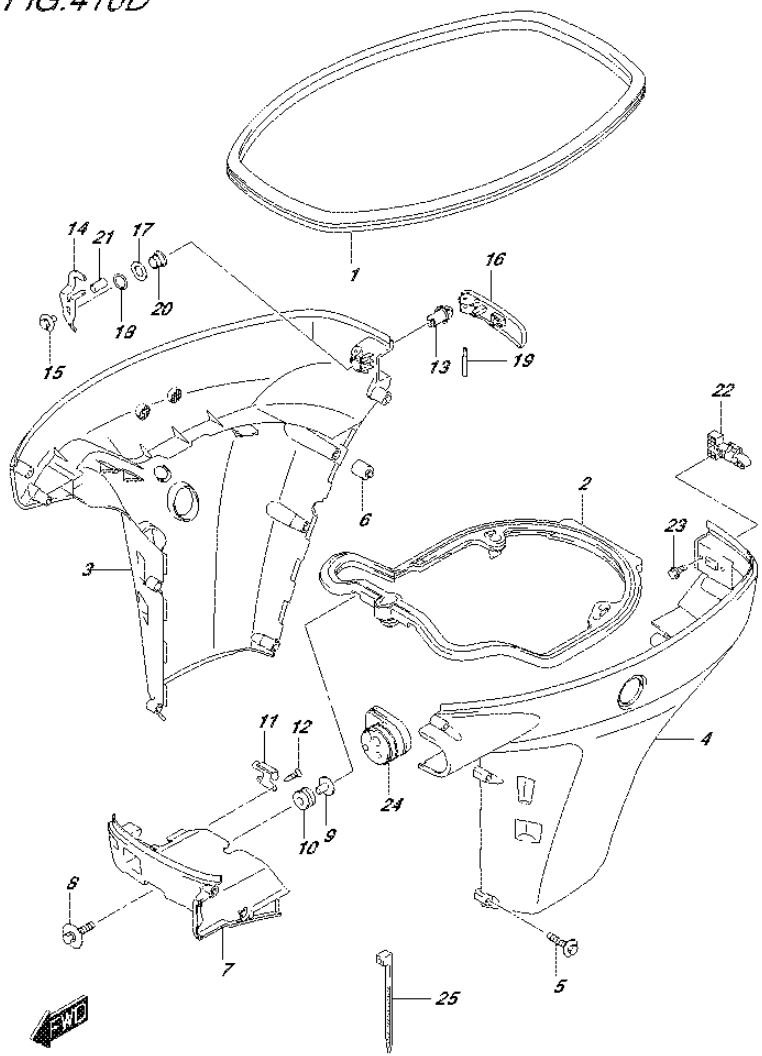

FIG.410D (3-J-12) SIDE COVER (DF40AST E34)

REF NO.	PART NO.	DESCRIPTION	Q'TY	REMARKS
22	61673-93J11	LATCH, HOOK LEVER	1	
23	09116-05010	BOLT (5X12)	2	
24	61124-88L10	GROMMET, REMOCON CABLE	1	
25	09407-25402	CLAMP (L:250)	1	

FIG.410E

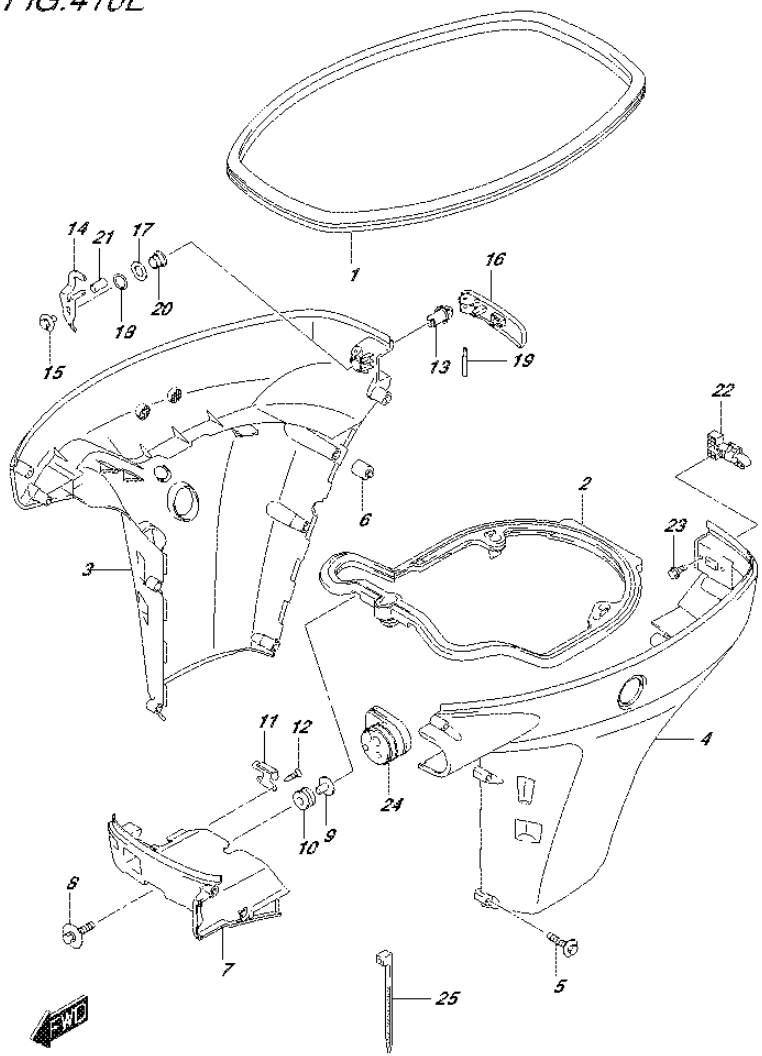

FIG.410E (3-J-13) SIDE COVER (DF50A E01)

REF NO.	PART NO.	DESCRIPTION	Q'TY	REMARKS
1	61112-88L10	RUBBER, SIDE COVER	1	
2	61134-88L10	SEAL, SIDE COVER	1	
3-1	61811-88L30-0EP	COVER, SIDE STBD (S) (BLACK)	1	W/TRANSOM(S)
3-2	61811-88L30-Y5S	COVER, SIDE STBD (S) (WHITE)	1	W/TRANSOM(S)
3-3	61811-88L20-0EP	COVER, SIDE STBD (BLACK)	1	W/TRANSOM(L)
				W/TRANSOM(X)
3-4	61811-88L20-Y5S	COVER, SIDE STBD (WHITE)	1	W/TRANSOM(L)
				W/TRANSOM(X)
4-1	61821-88L30-0EP	COVER, SIDE PORT (S) (BLACK)	1	W/TRANSOM(S)
4-2	61821-88L30-Y5S	COVER, SIDE PORT (S) (WHITE)	1	W/TRANSOM(S)
4-3	61821-88L20-0EP	COVER, SIDE PORT (BLACK)	1	W/TRANSOM(L)
				W/TRANSOM(X)
4-4	61821-88L20-Y5S	COVER, SIDE PORT (WHITE)	1	W/TRANSOM(L)
				W/TRANSOM(X)
5-1	09136-06148	SCREW (6X35)	9	W/TRANSOM(S)
5-2	09136-06148	SCREW (6X35)	10	W/TRANSOM(L)
				W/TRANSOM(X)
6	61151-88L00	CUSHION, SIDE COVER	1	
7-1	61831-88L10-0EP	PANEL, FRONT (BLACK)	1	
7-2	61831-88L10-Y5S	PANEL, FRONT (WHITE)	1	
8	09116-08163	BOLT (8X38)	2	
9	09169-08039	WASHER	2	
10	09320-11013	CUSHION	2	
11	61412-88L00	HOOK, FRONT PANEL	1	
12	03542-05169	SCREW	2	
13	61632-93J00	SHAFT, ENGINE COVER HOOK	1	
14	61641-88L00	HOOK, ENGINE COVER	1	
15	09116-06127	BOLT (6X12)	1	
16	61633-88L00	LEVER, HOOK REAR	1	
17	09160-13014	WASHER (13.2X25X1)	1	
18	09164-14008	WASHER	1	
19	09202-04022	PIN	1	
20	09306-13007	BUSH	1	
21	09352-50901-600	HOSE (5X9X600)	1	L:600->20

FIG.410E

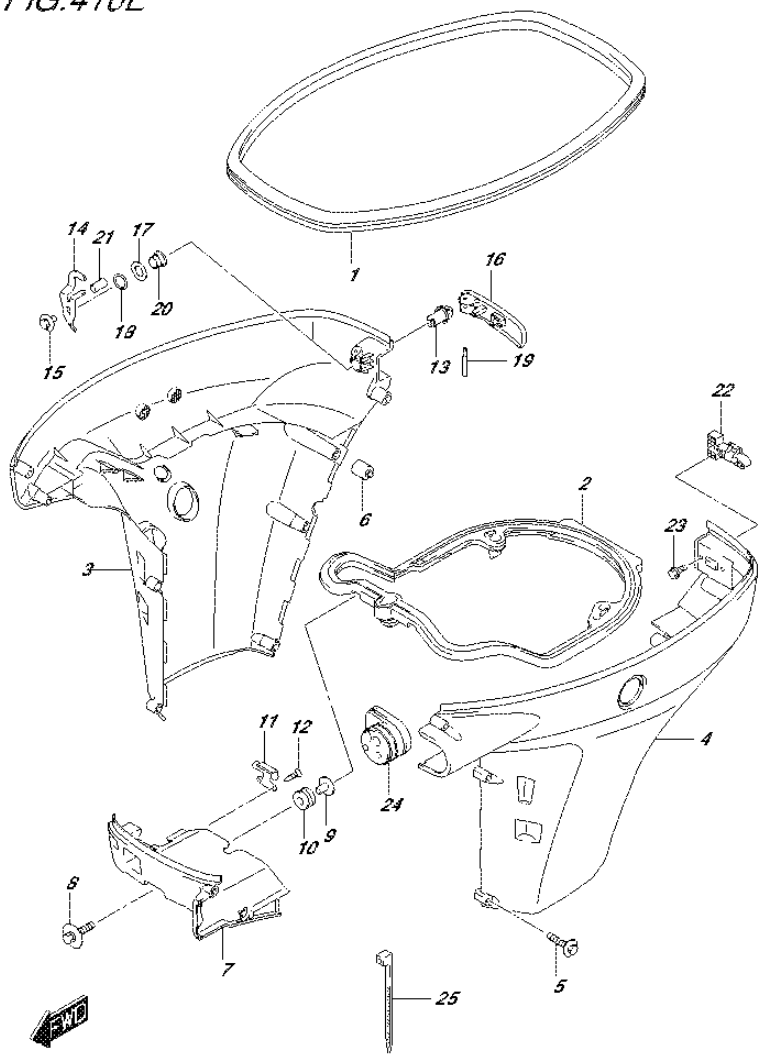

FIG.410E (3-J-14) SIDE COVER (DF50A E01)

REF NO.	PART NO.	DESCRIPTION	Q'TY	REMARKS
22	61673-93J11	LATCH, HOOK LEVER	1	
23	09116-05010	BOLT (5X12)	2	
24	61124-88L10	GROMMET, REMOCON CABLE	1	
25	09407-25402	CLAMP (L:250)	1	

FIG.410F

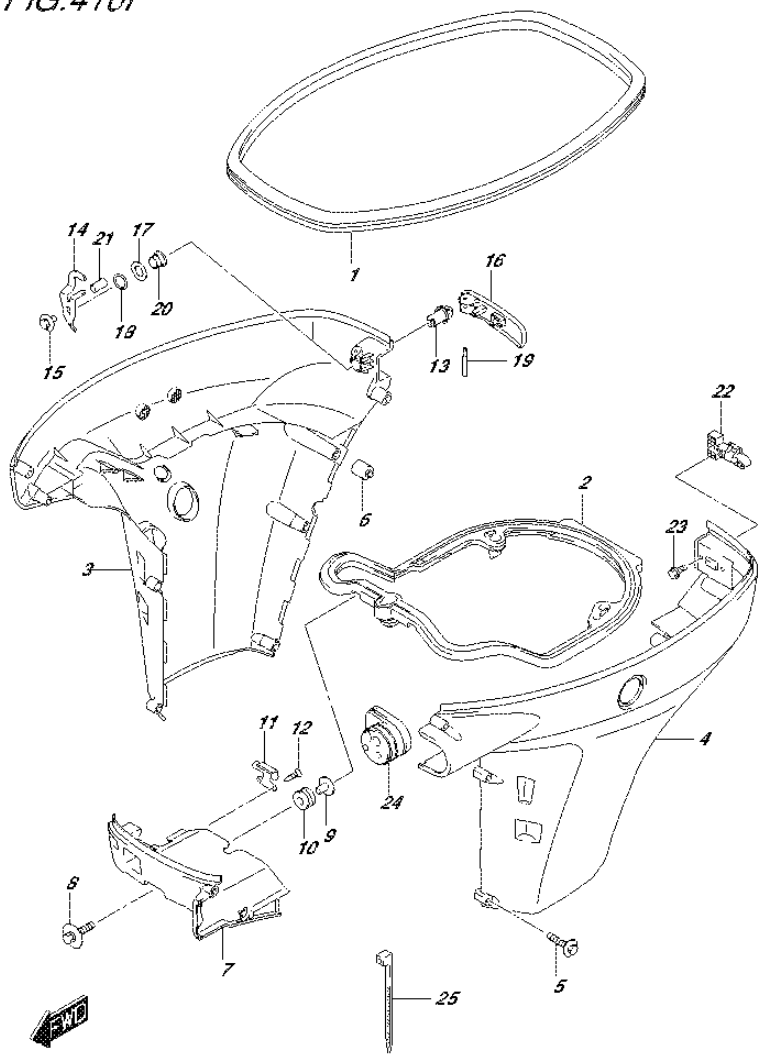

FIG.410F (3-J-15) SIDE COVER (DF50ATH E01)

REF NO.	PART NO.	DESCRIPTION	Q'TY	REMARKS
1	61112-88L10	RUBBER, SIDE COVER	1	
2	61134-88L10	SEAL, SIDE COVER	1	
3	61811-88L20-0EP	COVER, SIDE STBD (BLACK)	1	
4	61821-88L20-0EP	COVER, SIDE PORT (BLACK)	1	
5	09136-06148	SCREW (6X35)	10	
6	61151-88L00	CUSHION, SIDE COVER	1	
7	61831-88L10-0EP	PANEL, FRONT (BLACK)	1	
8	09116-08163	BOLT (8X38)	2	
9	09169-08039	WASHER	2	
10	09320-11013	CUSHION	2	
11	61412-88L00	HOOK, FRONT PANEL	1	
12	03542-05169	SCREW	2	
13	61632-93J00	SHAFT, ENGINE COVER HOOK	1	
14	61641-88L00	HOOK, ENGINE COVER	1	
15	09116-06127	BOLT (6X12)	1	
16	61633-88L00	LEVER, HOOK REAR	1	
17	09160-13014	WASHER (13.2X25X1)	1	
18	09164-14008	WASHER	1	
19	09202-04022	PIN	1	
20	09306-13007	BUSH	1	
21	09352-50901-600	HOSE (5X9X600)	1	L:600->20
22	61673-93J11	LATCH, HOOK LEVER	1	
23	09116-05010	BOLT (5X12)	2	
24	61124-88L10	GROMMET, REMOCON CABLE	1	
25	09407-25402	CLAMP (L:250)	1	

FIG.410G

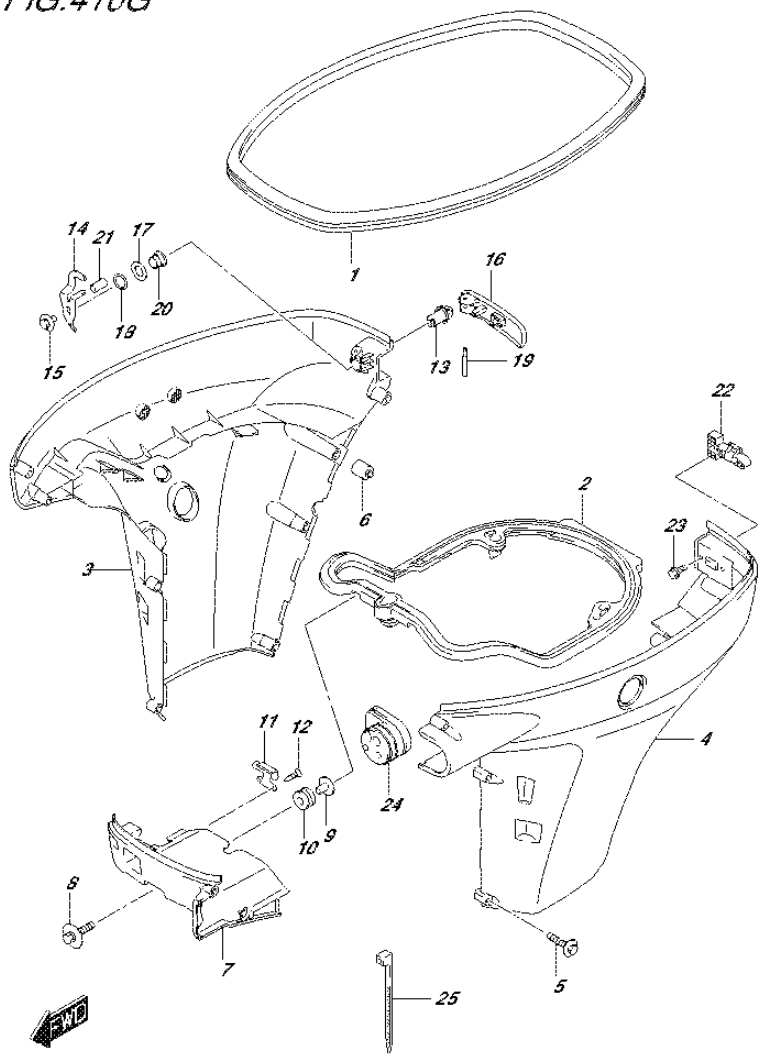

FIG.410G (3-K-2) SIDE COVER (DF60A E01)

REF NO.	PART NO.	DESCRIPTION	Q'TY	REMARKS
1	61112-88L10	RUBBER, SIDE COVER	1	
2	61134-88L10	SEAL, SIDE COVER	1	
3-1	61811-88L30-0EP	COVER, SIDE STBD (S) (BLACK)	1	W/TRANSOM(S)
3-2	61811-88L30-Y5S	COVER, SIDE STBD (S) (WHITE)	1	W/TRANSOM(S)
3-3	61811-88L20-0EP	COVER, SIDE STBD (BLACK)	1	W/TRANSOM(L)
				W/TRANSOM(X)
3-4	61811-88L20-Y5S	COVER, SIDE STBD (WHITE)	1	W/TRANSOM(L)
				W/TRANSOM(X)
4-1	61821-88L30-0EP	COVER, SIDE PORT (S) (BLACK)	1	W/TRANSOM(S)
4-2	61821-88L30-Y5S	COVER, SIDE PORT (S) (WHITE)	1	W/TRANSOM(S)
4-3	61821-88L20-0EP	COVER, SIDE PORT (BLACK)	1	W/TRANSOM(L)
				W/TRANSOM(X)
4-4	61821-88L20-Y5S	COVER, SIDE PORT (WHITE)	1	W/TRANSOM(L)
				W/TRANSOM(X)
5-1	09136-06148	SCREW (6X35)	9	W/TRANSOM(S)
5-2	09136-06148	SCREW (6X35)	10	W/TRANSOM(L)
				W/TRANSOM(X)
6	61151-88L00	CUSHION, SIDE COVER	1	
7-1	61831-88L10-0EP	PANEL, FRONT (BLACK)	1	
7-2	61831-88L10-Y5S	PANEL, FRONT (WHITE)	1	
8	09116-08163	BOLT (8X38)	2	
9	09169-08039	WASHER	2	
10	09320-11013	CUSHION	2	
11	61412-88L00	HOOK, FRONT PANEL	1	
12	03542-05169	SCREW	2	
13	61632-93J00	SHAFT, ENGINE COVER HOOK	1	
14	61641-88L00	HOOK, ENGINE COVER	1	
15	09116-06127	BOLT (6X12)	1	
16	61633-88L00	LEVER, HOOK REAR	1	
17	09160-13014	WASHER (13.2X25X1)	1	
18	09164-14008	WASHER	1	
19	09202-04022	PIN	1	
20	09306-13007	BUSH	1	
21	09352-50901-600	HOSE (5X9X600)	1	L:600->20

FIG.410G

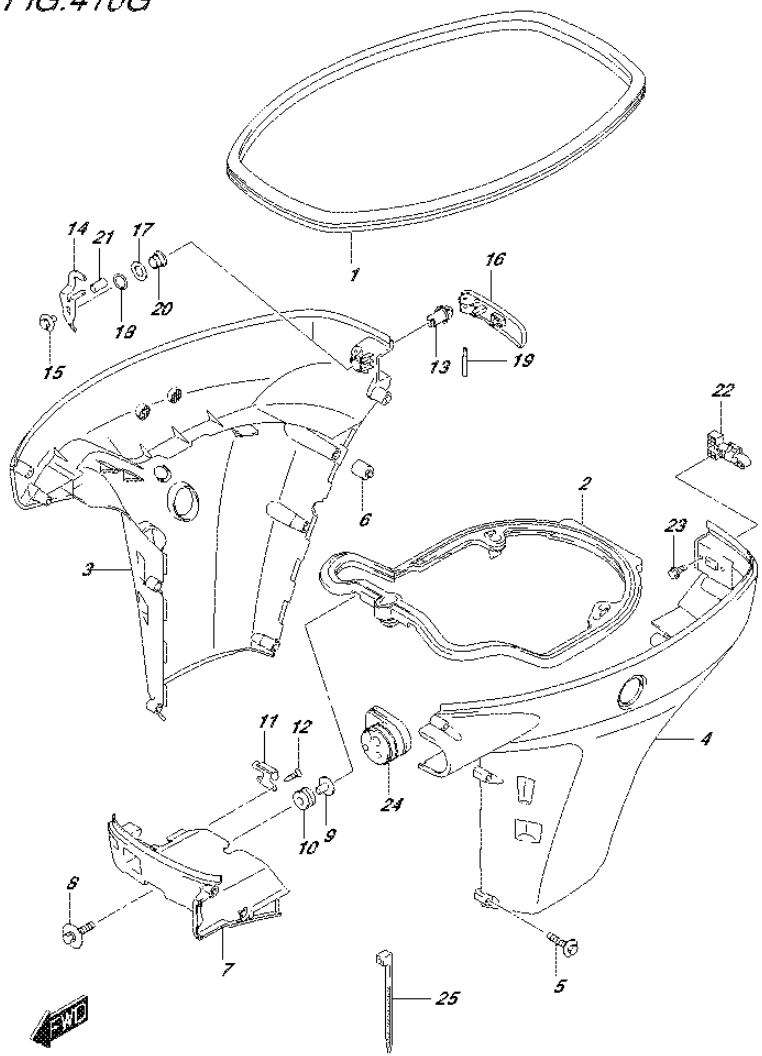

FIG.410G (3-K-3) SIDE COVER (DF60A E01)

REF NO.	PART NO.	DESCRIPTION	Q'TY	REMARKS
22	61673-93J11	LATCH, HOOK LEVER	1	
23	09116-05010	BOLT (5X12)	2	
24	61124-88L10	GROMMET, REMOCON CABLE	1	
25	09407-25402	CLAMP (L:250)	1	

FIG.410H

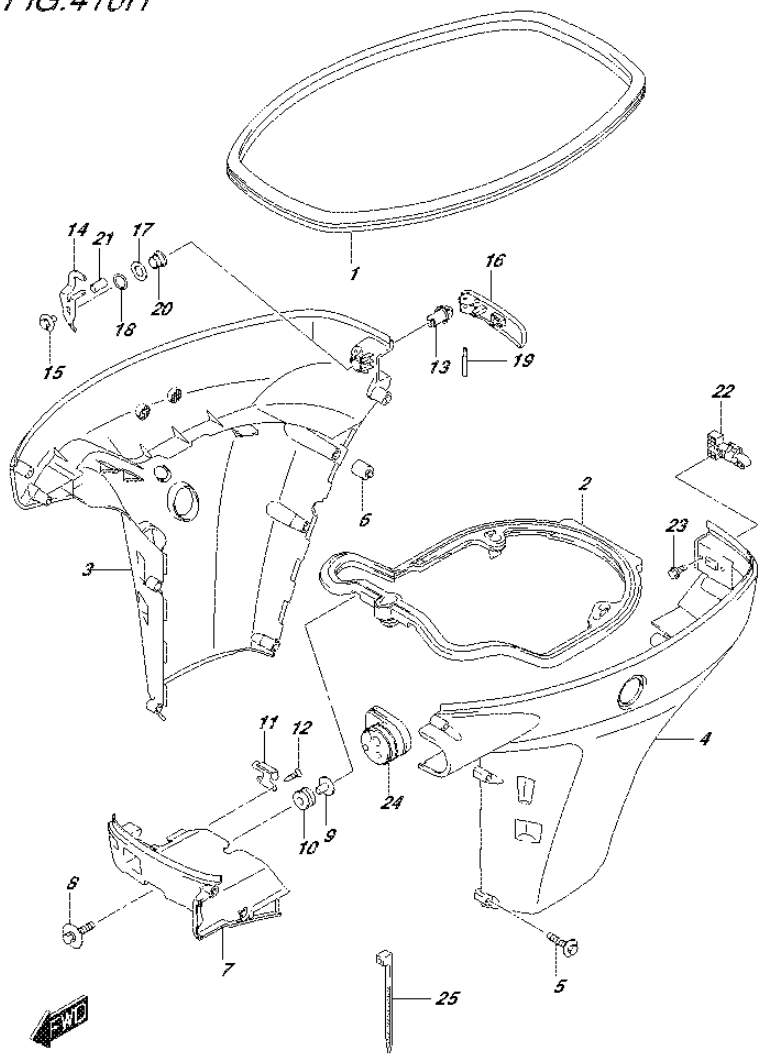

FIG.410H (3-K-4) SIDE COVER (DF60A E40)

REF NO.	PART NO.	DESCRIPTION	Q'TY	REMARKS
1	61112-88L10	RUBBER, SIDE COVER	1	
2	61134-88L10	SEAL, SIDE COVER	1	
3-1	61811-88L20-0EP	COVER, SIDE STBD (BLACK)	1	
3-2	61811-88L20-Y5S	COVER, SIDE STBD (WHITE)	1	
4-1	61821-88L20-0EP	COVER, SIDE PORT (BLACK)	1	
4-2	61821-88L20-Y5S	COVER, SIDE PORT (WHITE)	1	
5	09136-06148	SCREW (6X35)	10	
6	61151-88L00	CUSHION, SIDE COVER	1	
7-1	61831-88L10-0EP	PANEL, FRONT (BLACK)	1	
7-2	61831-88L10-Y5S	PANEL, FRONT (WHITE)	1	
8	09116-08163	BOLT (8X38)	2	
9	09169-08039	WASHER	2	
10	09320-11013	CUSHION	2	
11	61412-88L00	HOOK, FRONT PANEL	1	
12	03542-05169	SCREW	2	
13	61632-93J00	SHAFT, ENGINE COVER HOOK	1	
14	61641-88L00	HOOK, ENGINE COVER	1	
15	09116-06127	BOLT (6X12)	1	
16	61633-88L00	LEVER, HOOK REAR	1	
17	09160-13014	WASHER (13.2X25X1)	1	
18	09164-14008	WASHER	1	
19	09202-04022	PIN	1	
20	09306-13007	BUSH	1	
21	09352-50901-600	HOSE (5X9X600)	1	L:600->20
22	61673-93J11	LATCH, HOOK LEVER	1	
23	09116-05010	BOLT (5X12)	2	
24	61124-88L10	GROMMET, REMOCON CABLE	1	
25	09407-25402	CLAMP (L:250)	1	

FIG.410J

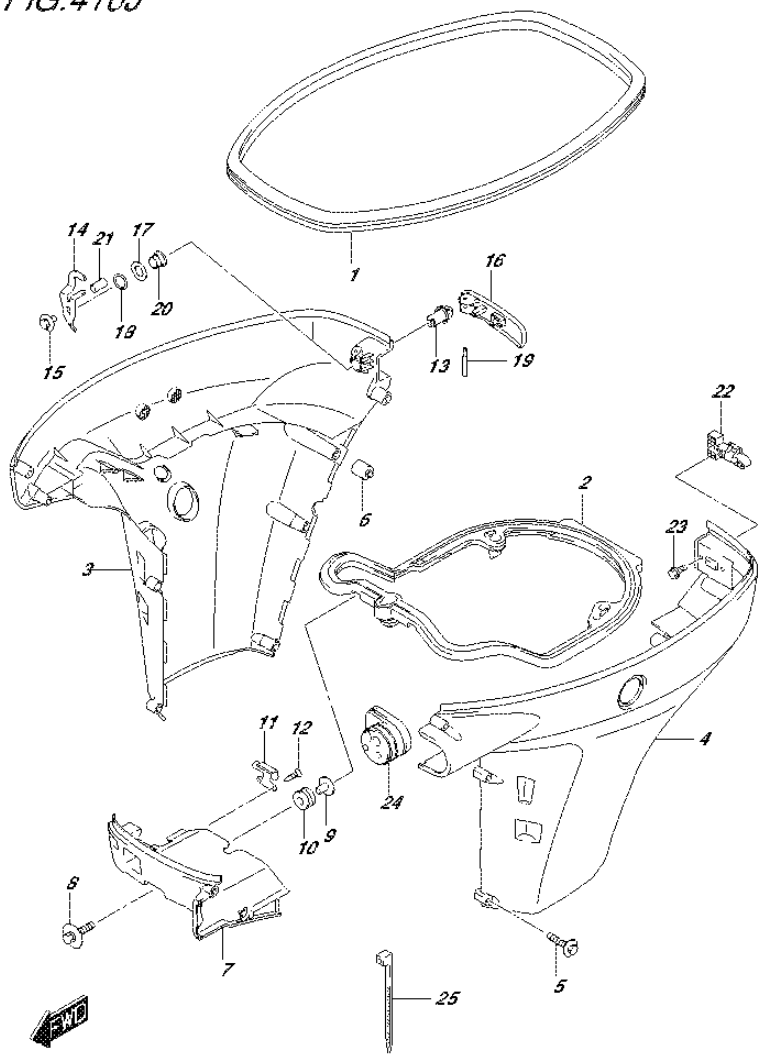

FIG.410J (3-K-5) SIDE COVER (DF60AQH E01)

REF NO.	PART NO.	DESCRIPTION	Q'TY	REMARKS
1	61112-88L10	RUBBER, SIDE COVER	1	
2	61134-88L10	SEAL, SIDE COVER	1	
3	61811-88L20-0EP	COVER, SIDE STBD (BLACK)	1	
4	61821-88L20-0EP	COVER, SIDE PORT (BLACK)	1	
5	09136-06148	SCREW (6X35)	10	
6	61151-88L00	CUSHION, SIDE COVER	1	
7	61831-88L10-0EP	PANEL, FRONT (BLACK)	1	
8	09116-08163	BOLT (8X38)	2	
9	09169-08039	WASHER	2	
10	09320-11013	CUSHION	2	
11	61412-88L00	HOOK, FRONT PANEL	1	
12	03542-05169	SCREW	2	
13	61632-93J00	SHAFT, ENGINE COVER HOOK	1	
14	61641-88L00	HOOK, ENGINE COVER	1	
15	09116-06127	BOLT (6X12)	1	
16	61633-88L00	LEVER, HOOK REAR	1	
17	09160-13014	WASHER (13.2X25X1)	1	
18	09164-14008	WASHER	1	
19	09202-04022	PIN	1	
20	09306-13007	BUSH	1	
21	09352-50901-600	HOSE (5X9X600)	1	L:600->20
22	61673-93J11	LATCH, HOOK LEVER	1	
23	09116-05010	BOLT (5X12)	2	
24	61124-88L10	GROMMET, REMOCON CABLE	1	
25	09407-25402	CLAMP (L:250)	1	

FIG.410K

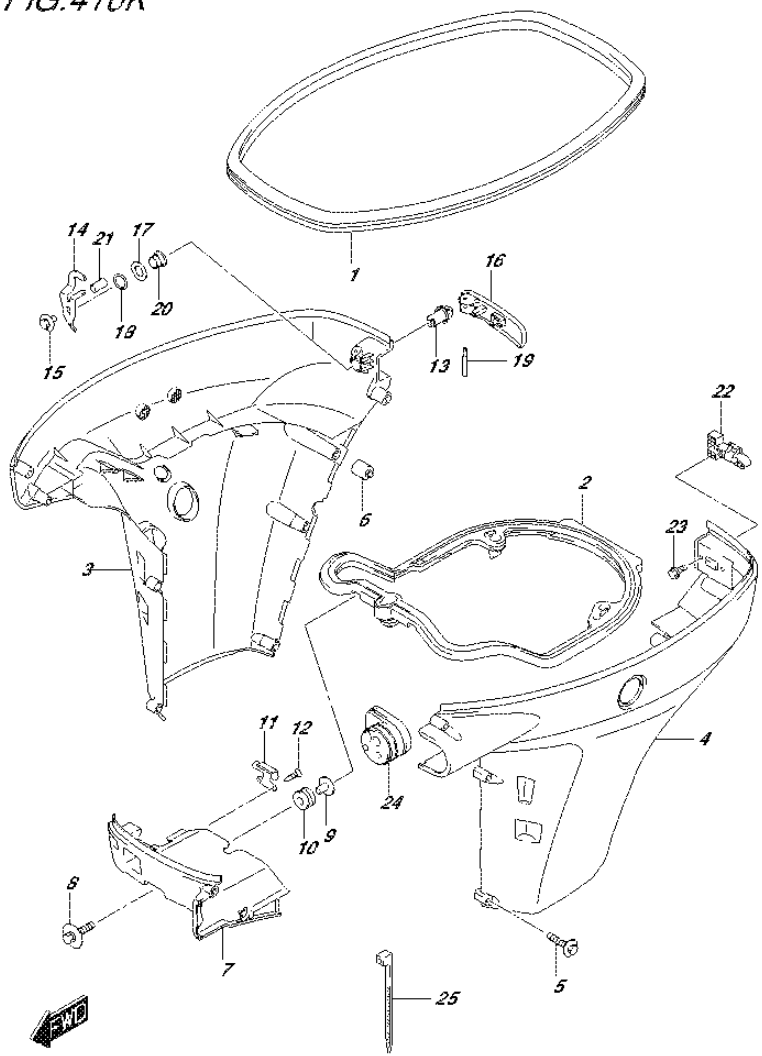

FIG.410K (3-K-6) SIDE COVER (DF60AQH E40)

REF NO.	PART NO.	DESCRIPTION	Q'TY	REMARKS
1	61112-88L10	RUBBER, SIDE COVER	1	
2	61134-88L10	SEAL, SIDE COVER	1	
3	61811-88L20-0EP	COVER, SIDE STBD (BLACK)	1	
4	61821-88L20-0EP	COVER, SIDE PORT (BLACK)	1	
5	09136-06148	SCREW (6X35)	10	
6	61151-88L00	CUSHION, SIDE COVER	1	
7	61831-88L10-0EP	PANEL, FRONT (BLACK)	1	
8	09116-08163	BOLT (8X38)	2	
9	09169-08039	WASHER	2	
10	09320-11013	CUSHION	2	
11	61412-88L00	HOOK, FRONT PANEL	1	
12	03542-05169	SCREW	2	
13	61632-93J00	SHAFT, ENGINE COVER HOOK	1	
14	61641-88L00	HOOK, ENGINE COVER	1	
15	09116-06127	BOLT (6X12)	1	
16	61633-88L00	LEVER, HOOK REAR	1	
17	09160-13014	WASHER (13.2X25X1)	1	
18	09164-14008	WASHER	1	
19	09202-04022	PIN	1	
20	09306-13007	BUSH	1	
21	09352-50901-600	HOSE (5X9X600)	1	L:600->20
22	61673-93J11	LATCH, HOOK LEVER	1	
23	09116-05010	BOLT (5X12)	2	
24	61124-88L10	GROMMET, REMOCON CABLE	1	
25	09407-25402	CLAMP (L:250)	1	

FIG.410L

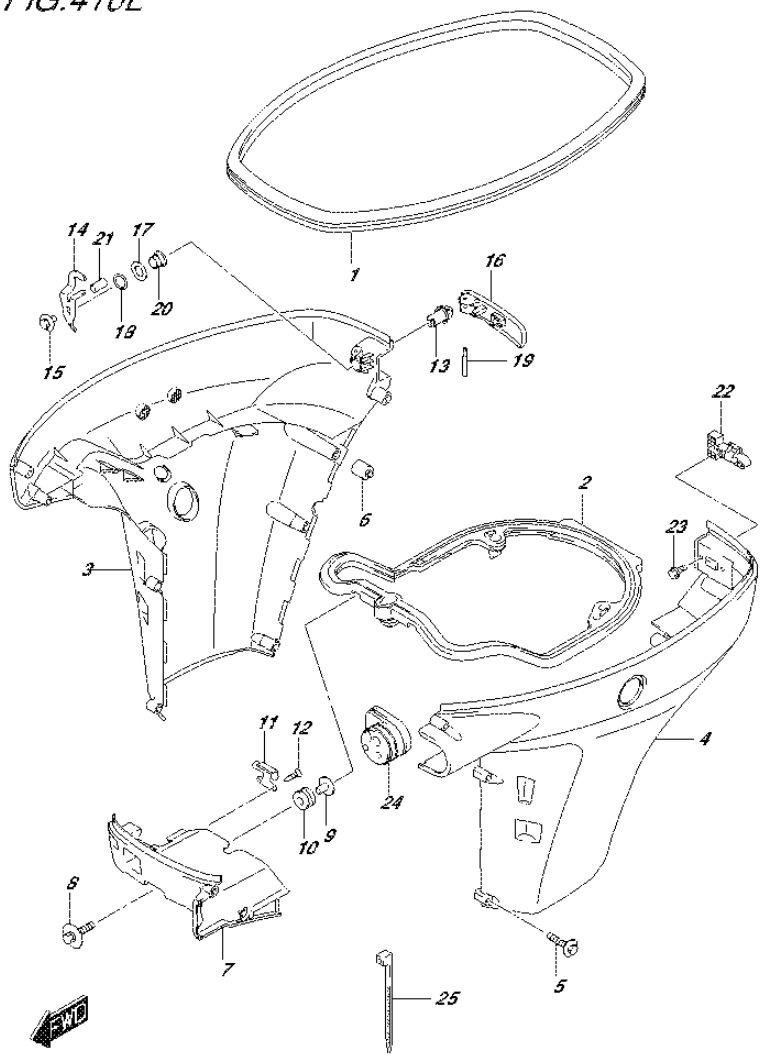

FIG.410L (3-K-7) SIDE COVER (DF60ATH E01)

REF NO.	PART NO.	DESCRIPTION	Q'TY	REMARKS
1	61112-88L10	RUBBER, SIDE COVER	1	
2	61134-88L10	SEAL, SIDE COVER	1	
3	61811-88L20-0EP	COVER, SIDE STBD (BLACK)	1	
4	61821-88L20-0EP	COVER, SIDE PORT (BLACK)	1	
5	09136-06148	SCREW (6X35)	10	
6	61151-88L00	CUSHION, SIDE COVER	1	
7	61831-88L10-0EP	PANEL, FRONT (BLACK)	1	
8	09116-08163	BOLT (8X38)	2	
9	09169-08039	WASHER	2	
10	09320-11013	CUSHION	2	
11	61412-88L00	HOOK, FRONT PANEL	1	
12	03542-05169	SCREW	2	
13	61632-93J00	SHAFT, ENGINE COVER HOOK	1	
14	61641-88L00	HOOK, ENGINE COVER	1	
15	09116-06127	BOLT (6X12)	1	
16	61633-88L00	LEVER, HOOK REAR	1	
17	09160-13014	WASHER (13.2X25X1)	1	
18	09164-14008	WASHER	1	
19	09202-04022	PIN	1	
20	09306-13007	BUSH	1	
21	09352-50901-600	HOSE (5X9X600)	1	L:600->20
22	61673-93J11	LATCH, HOOK LEVER	1	
23	09116-05010	BOLT (5X12)	2	
24	61124-88L10	GROMMET, REMOCON CABLE	1	
25	09407-25402	CLAMP (L:250)	1	

FIG.410M

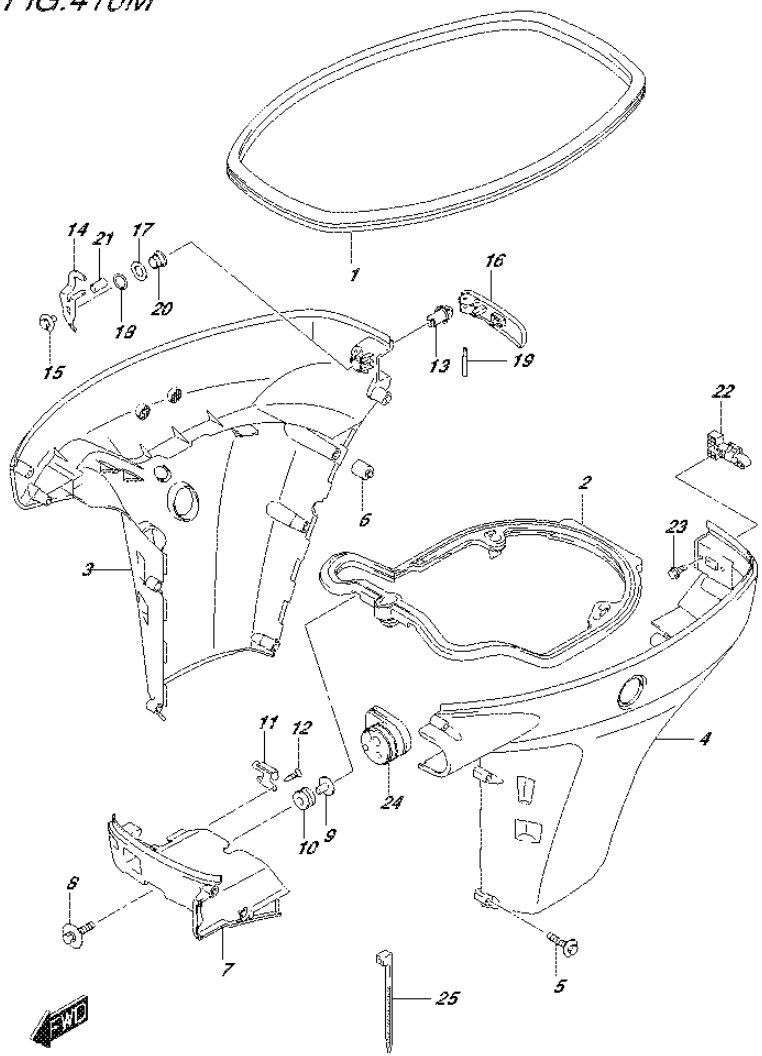

FIG.410M (3-K-8) SIDE COVER (DF60ATH E40)

REF NO.	PART NO.	DESCRIPTION	Q'TY	REMARKS
1	61112-88L10	RUBBER, SIDE COVER	1	
2	61134-88L10	SEAL, SIDE COVER	1	
3	61811-88L20-0EP	COVER, SIDE STBD (BLACK)	1	
4	61821-88L20-0EP	COVER, SIDE PORT (BLACK)	1	
5	09136-06148	SCREW (6X35)	10	
6	61151-88L00	CUSHION, SIDE COVER	1	
7	61831-88L10-0EP	PANEL, FRONT (BLACK)	1	
8	09116-08163	BOLT (8X38)	2	
9	09169-08039	WASHER	2	
10	09320-11013	CUSHION	2	
11	61412-88L00	HOOK, FRONT PANEL	1	
12	03542-05169	SCREW	2	
13	61632-93J00	SHAFT, ENGINE COVER HOOK	1	
14	61641-88L00	HOOK, ENGINE COVER	1	
15	09116-06127	BOLT (6X12)	1	
16	61633-88L00	LEVER, HOOK REAR	1	
17	09160-13014	WASHER (13.2X25X1)	1	
18	09164-14008	WASHER	1	
19	09202-04022	PIN	1	
20	09306-13007	BUSH	1	
21	09352-50901-600	HOSE (5X9X600)	1	L:600->20
22	61673-93J11	LATCH, HOOK LEVER	1	
23	09116-05010	BOLT (5X12)	2	
24	61124-88L10	GROMMET, REMOCON CABLE	1	
25	09407-25402	CLAMP (L:250)	1	

FIG.410N

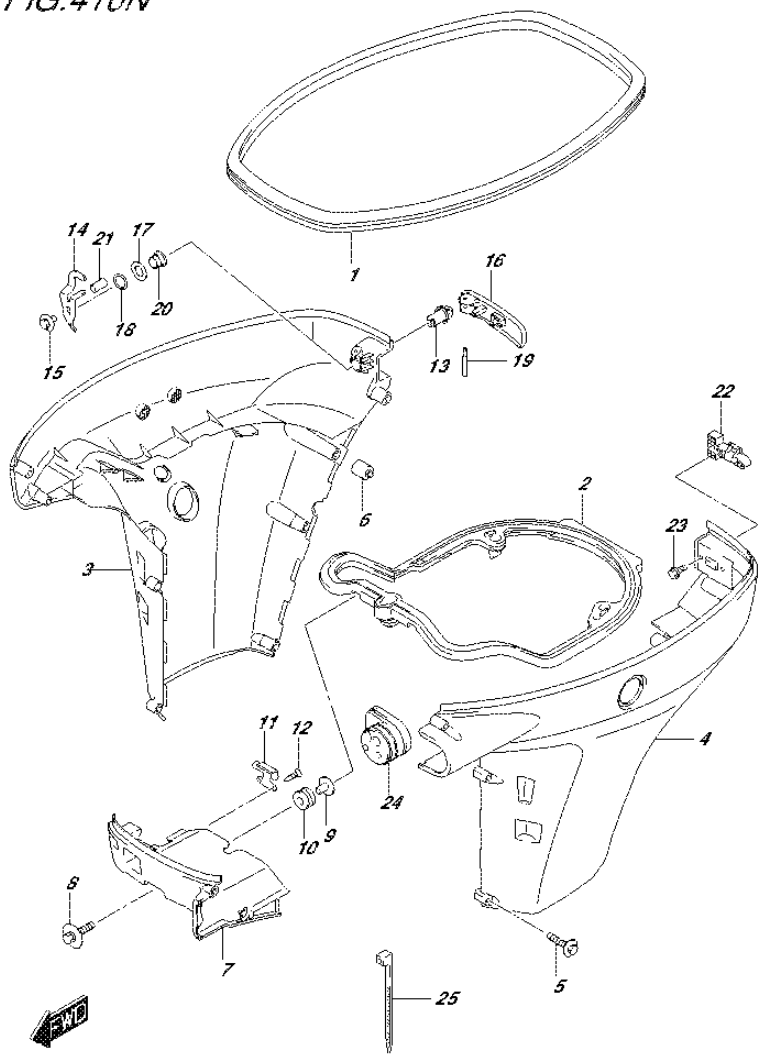

FIG.410N (3-K-9) SIDE COVER (DF50AVT E01)

REF NO.	PART NO.	DESCRIPTION	Q'TY	REMARKS
1	61112-88L10	RUBBER, SIDE COVER	1	
2	61134-88L10	SEAL, SIDE COVER	1	
3	61811-88L30-0EP	COVER, SIDE STBD (S) (BLACK)	1	
4	61821-88L30-0EP	COVER, SIDE PORT (S) (BLACK)	1	
5	09136-06148	SCREW (6X35)	9	
6	61151-88L00	CUSHION, SIDE COVER	1	
7	61831-88L10-0EP	PANEL, FRONT (BLACK)	1	
8	09116-08163	BOLT (8X38)	2	
9	09169-08039	WASHER	2	
10	09320-11013	CUSHION	2	
11	61412-88L00	HOOK, FRONT PANEL	1	
12	03542-05169	SCREW	2	
13	61632-93J00	SHAFT, ENGINE COVER HOOK	1	
14	61641-88L00	HOOK, ENGINE COVER	1	
15	09116-06127	BOLT (6X12)	1	
16	61633-88L00	LEVER, HOOK REAR	1	
17	09160-13014	WASHER (13.2X25X1)	1	
18	09164-14008	WASHER	1	
19	09202-04022	PIN	1	
20	09306-13007	BUSH	1	
21	09352-50901-600	HOSE (5X9X600)	1	L:600->20
22	61673-93J11	LATCH, HOOK LEVER	1	
23	09116-05010	BOLT (5X12)	2	
24	61124-88L10	GROMMET, REMOCON CABLE	1	
25	09407-25402	CLAMP (L:250)	1	

FIG.410P

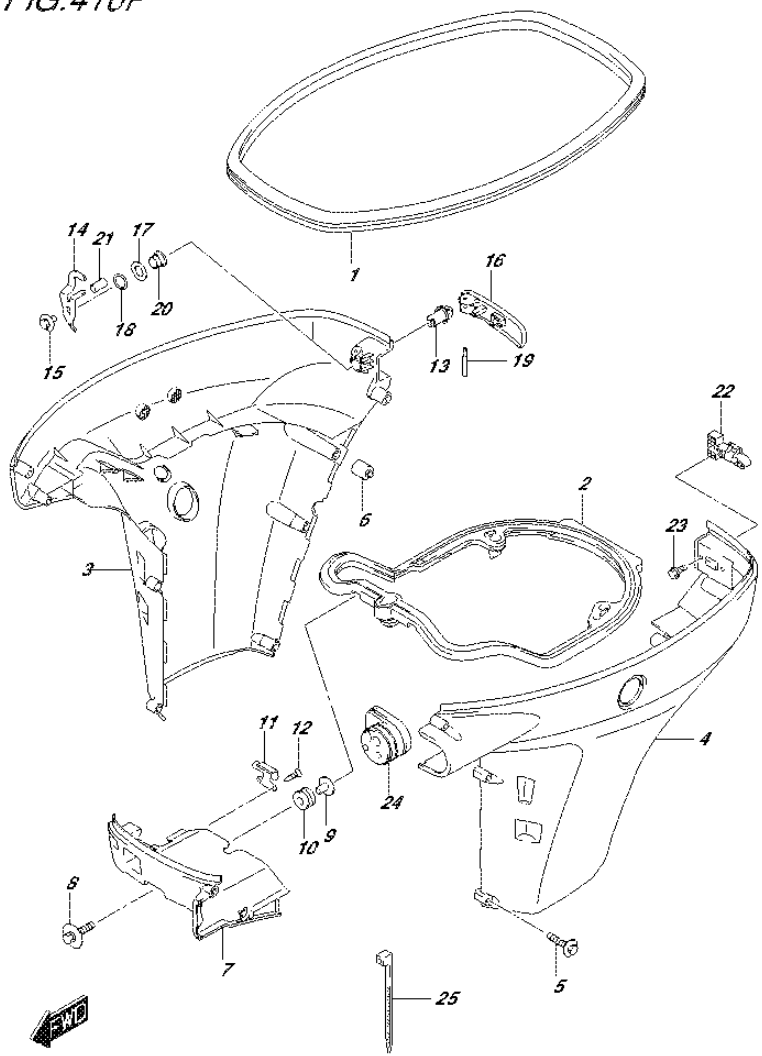

FIG.410P (3-K-10) SIDE COVER (DF50AVTH E01)

REF NO.	PART NO.	DESCRIPTION	Q'TY	REMARKS
1	61112-88L10	RUBBER, SIDE COVER	1	
2	61134-88L10	SEAL, SIDE COVER	1	
3	61811-88L30-0EP	COVER, SIDE STBD (S) (BLACK)	1	
4	61821-88L30-0EP	COVER, SIDE PORT (S) (BLACK)	1	
5	09136-06148	SCREW (6X35)	9	
6	61151-88L00	CUSHION, SIDE COVER	1	
7	61831-88L10-0EP	PANEL, FRONT (BLACK)	1	
8	09116-08163	BOLT (8X38)	2	
9	09169-08039	WASHER	2	
10	09320-11013	CUSHION	2	
11	61412-88L00	HOOK, FRONT PANEL	1	
12	03542-05169	SCREW	2	
13	61632-93J00	SHAFT, ENGINE COVER HOOK	1	
14	61641-88L00	HOOK, ENGINE COVER	1	
15	09116-06127	BOLT (6X12)	1	
16	61633-88L00	LEVER, HOOK REAR	1	
17	09160-13014	WASHER (13.2X25X1)	1	
18	09164-14008	WASHER	1	
19	09202-04022	PIN	1	
20	09306-13007	BUSH	1	
21	09352-50901-600	HOSE (5X9X600)	1	L:600->20
22	61673-93J11	LATCH, HOOK LEVER	1	
23	09116-05010	BOLT (5X12)	2	
24	61124-88L10	GROMMET, REMOCON CABLE	1	
25	09407-25402	CLAMP (L:250)	1	

FIG.410R

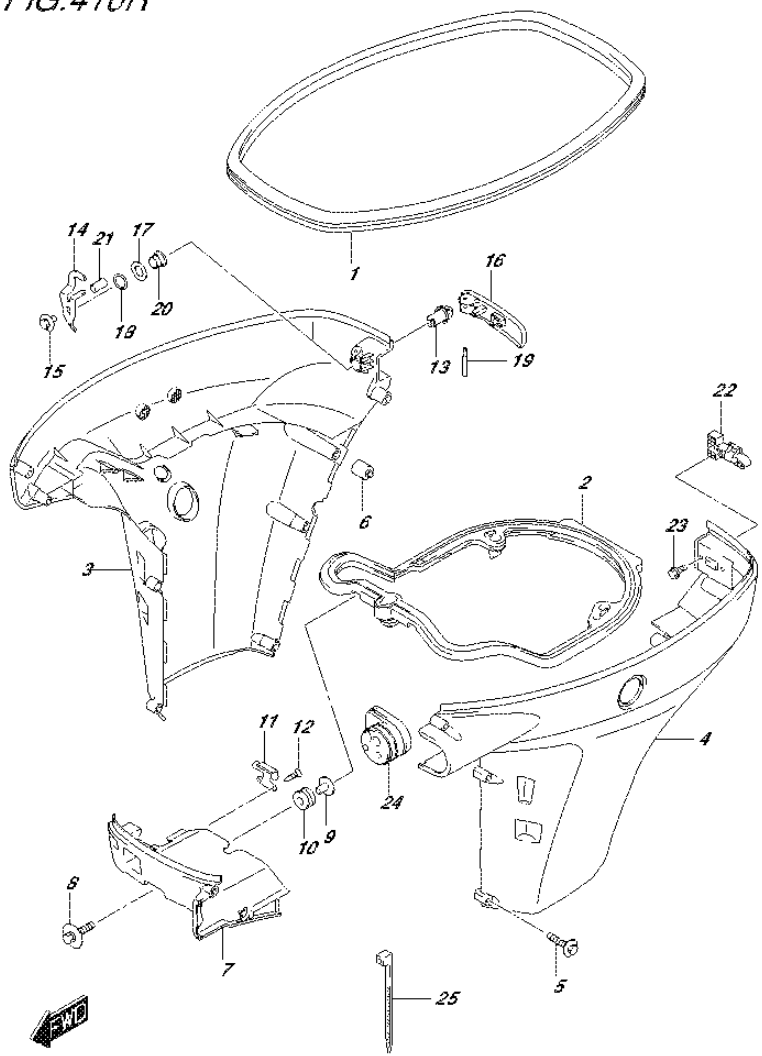

FIG.410R (3-K-11) SIDE COVER (DF60AVT E01)

REF NO.	PART NO.	DESCRIPTION	Q'TY	REMARKS
1	61112-88L10	RUBBER, SIDE COVER	1	
2	61134-88L10	SEAL, SIDE COVER	1	
3-1	61811-88L30-0EP	COVER, SIDE STBD (S) (BLACK)	1	W/TRANSOM(L)
3-2	61811-88L20-0EP	COVER, SIDE STBD (BLACK)	1	W/TRANSOM(X)
4-1	61821-88L30-0EP	COVER, SIDE PORT (S) (BLACK)	1	W/TRANSOM(L)
4-2	61821-88L20-0EP	COVER, SIDE PORT (BLACK)	1	W/TRANSOM(X)
5-1	09136-06148	SCREW (6X35)	9	W/TRANSOM(L)
5-2	09136-06148	SCREW (6X35)	10	W/TRANSOM(X)
6	61151-88L00	CUSHION, SIDE COVER	1	
7	61831-88L10-0EP	PANEL, FRONT (BLACK)	1	
8	09116-08163	BOLT (8X38)	2	
9	09169-08039	WASHER	2	
10	09320-11013	CUSHION	2	
11	61412-88L00	HOOK, FRONT PANEL	1	
12	03542-05169	SCREW	2	
13	61632-93J00	SHAFT, ENGINE COVER HOOK	1	
14	61641-88L00	HOOK, ENGINE COVER	1	
15	09116-06127	BOLT (6X12)	1	
16	61633-88L00	LEVER, HOOK REAR	1	
17	09160-13014	WASHER (13.2X25X1)	1	
18	09164-14008	WASHER	1	
19	09202-04022	PIN	1	
20	09306-13007	BUSH	1	
21	09352-50901-600	HOSE (5X9X600)	1	L:600->20
22	61673-93J11	LATCH, HOOK LEVER	1	
23	09116-05010	BOLT (5X12)	2	
24	61124-88L10	GROMMET, REMOCON CABLE	1	
25	09407-25402	CLAMP (L:250)	1	

FIG.410S

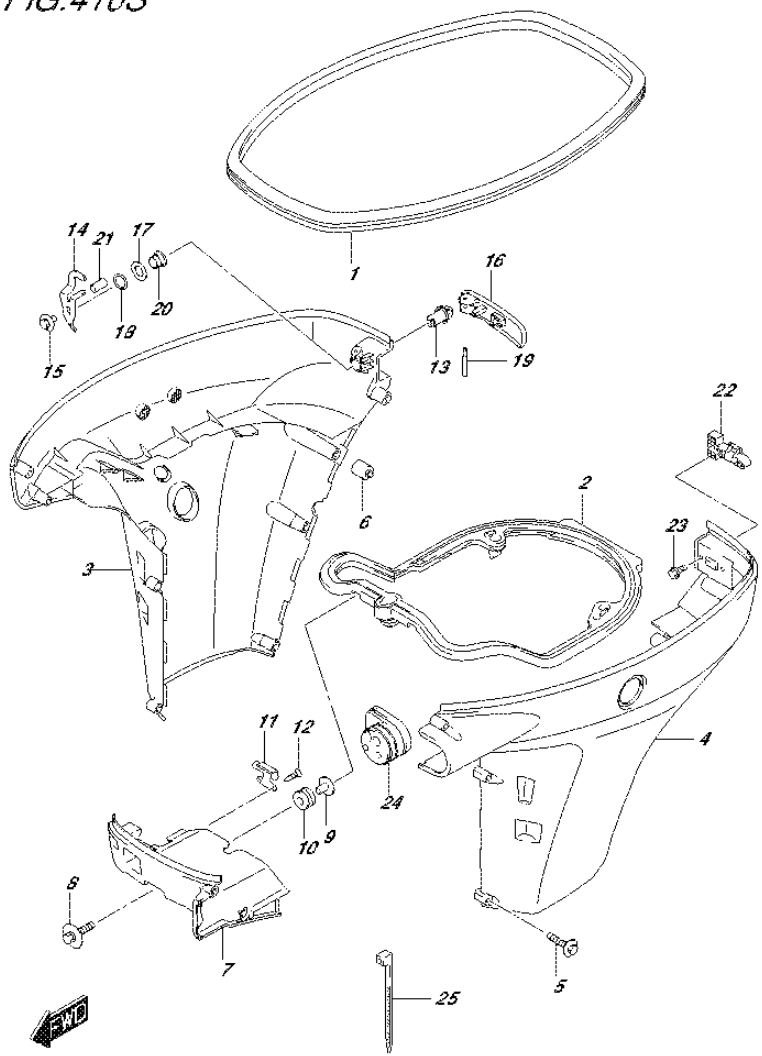

FIG.410S (3-K-12) SIDE COVER (DF60AVT E40)

REF NO.	PART NO.	DESCRIPTION	Q'TY	REMARKS
1	61112-88L10	RUBBER, SIDE COVER	1	
2	61134-88L10	SEAL, SIDE COVER	1	
3-1	61811-88L30-0EP	COVER, SIDE STBD (S) (BLACK)	1	W/TRANSOM(L)
3-2	61811-88L20-0EP	COVER, SIDE STBD (BLACK)	1	W/TRANSOM(X)
4-1	61821-88L30-0EP	COVER, SIDE PORT (S) (BLACK)	1	W/TRANSOM(L)
4-2	61821-88L20-0EP	COVER, SIDE PORT (BLACK)	1	W/TRANSOM(X)
5-1	09136-06148	SCREW (6X35)	9	W/TRANSOM(L)
5-2	09136-06148	SCREW (6X35)	10	W/TRANSOM(X)
6	61151-88L00	CUSHION, SIDE COVER	1	
7	61831-88L10-0EP	PANEL, FRONT (BLACK)	1	
8	09116-08163	BOLT (8X38)	2	
9	09169-08039	WASHER	2	
10	09320-11013	CUSHION	2	
11	61412-88L00	HOOK, FRONT PANEL	1	
12	03542-05169	SCREW	2	
13	61632-93J00	SHAFT, ENGINE COVER HOOK	1	
14	61641-88L00	HOOK, ENGINE COVER	1	
15	09116-06127	BOLT (6X12)	1	
16	61633-88L00	LEVER, HOOK REAR	1	
17	09160-13014	WASHER (13.2X25X1)	1	
18	09164-14008	WASHER	1	
19	09202-04022	PIN	1	
20	09306-13007	BUSH	1	
21	09352-50901-600	HOSE (5X9X600)	1	L:600->20
22	61673-93J11	LATCH, HOOK LEVER	1	
23	09116-05010	BOLT (5X12)	2	
24	61124-88L10	GROMMET, REMOCON CABLE	1	
25	09407-25402	CLAMP (L:250)	1	

FIG.410T

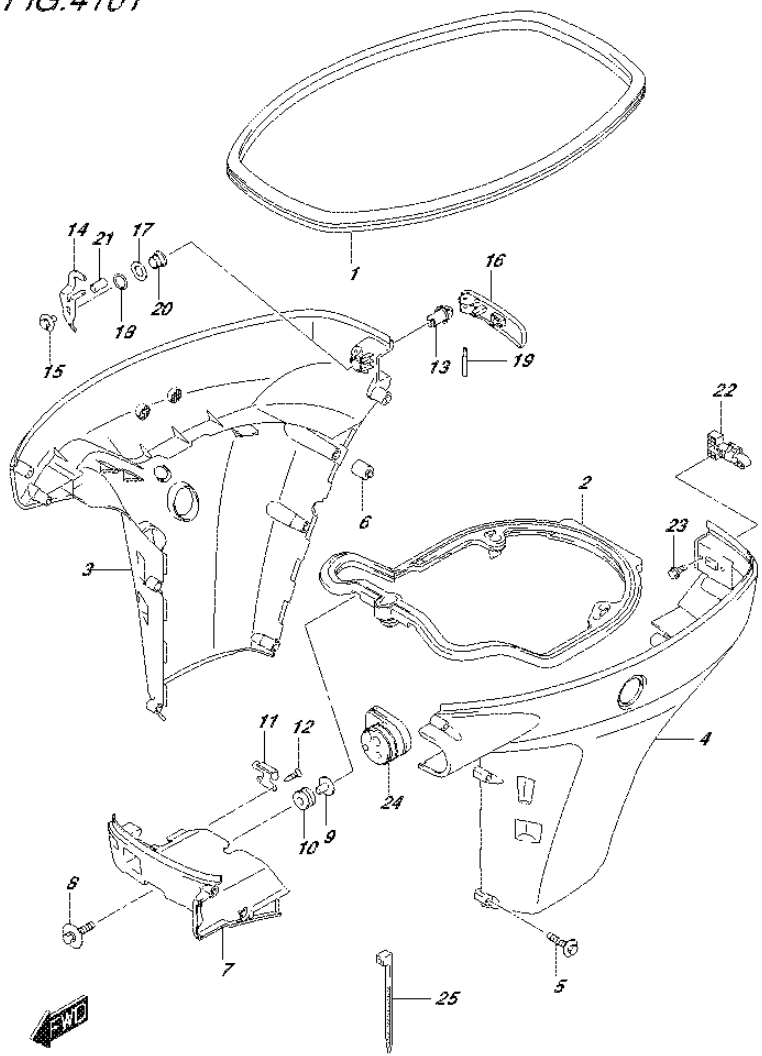

FIG.410T (3-K-13) SIDE COVER (DF60AVTH E01)

REF NO.	PART NO.	DESCRIPTION	Q'TY	REMARKS
1	61112-88L10	RUBBER, SIDE COVER	1	
2	61134-88L10	SEAL, SIDE COVER	1	
3-1	61811-88L30-0EP	COVER, SIDE STBD (S) (BLACK)	1	W/TRANSOM(L)
3-2	61811-88L20-0EP	COVER, SIDE STBD (BLACK)	1	W/TRANSOM(X)
4-1	61821-88L30-0EP	COVER, SIDE PORT (S) (BLACK)	1	W/TRANSOM(L)
4-2	61821-88L20-0EP	COVER, SIDE PORT (BLACK)	1	W/TRANSOM(X)
5-1	09136-06148	SCREW (6X35)	9	W/TRANSOM(L)
5-2	09136-06148	SCREW (6X35)	10	W/TRANSOM(X)
6	61151-88L00	CUSHION, SIDE COVER	1	
7	61831-88L10-0EP	PANEL, FRONT (BLACK)	1	
8	09116-08163	BOLT (8X38)	2	
9	09169-08039	WASHER	2	
10	09320-11013	CUSHION	2	
11	61412-88L00	HOOK, FRONT PANEL	1	
12	03542-05169	SCREW	2	
13	61632-93J00	SHAFT, ENGINE COVER HOOK	1	
14	61641-88L00	HOOK, ENGINE COVER	1	
15	09116-06127	BOLT (6X12)	1	
16	61633-88L00	LEVER, HOOK REAR	1	
17	09160-13014	WASHER (13.2X25X1)	1	
18	09164-14008	WASHER	1	
19	09202-04022	PIN	1	
20	09306-13007	BUSH	1	
21	09352-50901-600	HOSE (5X9X600)	1	L:600->20
22	61673-93J11	LATCH, HOOK LEVER	1	
23	09116-05010	BOLT (5X12)	2	
24	61124-88L10	GROMMET, REMOCON CABLE	1	
25	09407-25402	CLAMP (L:250)	1	

FIG.410U

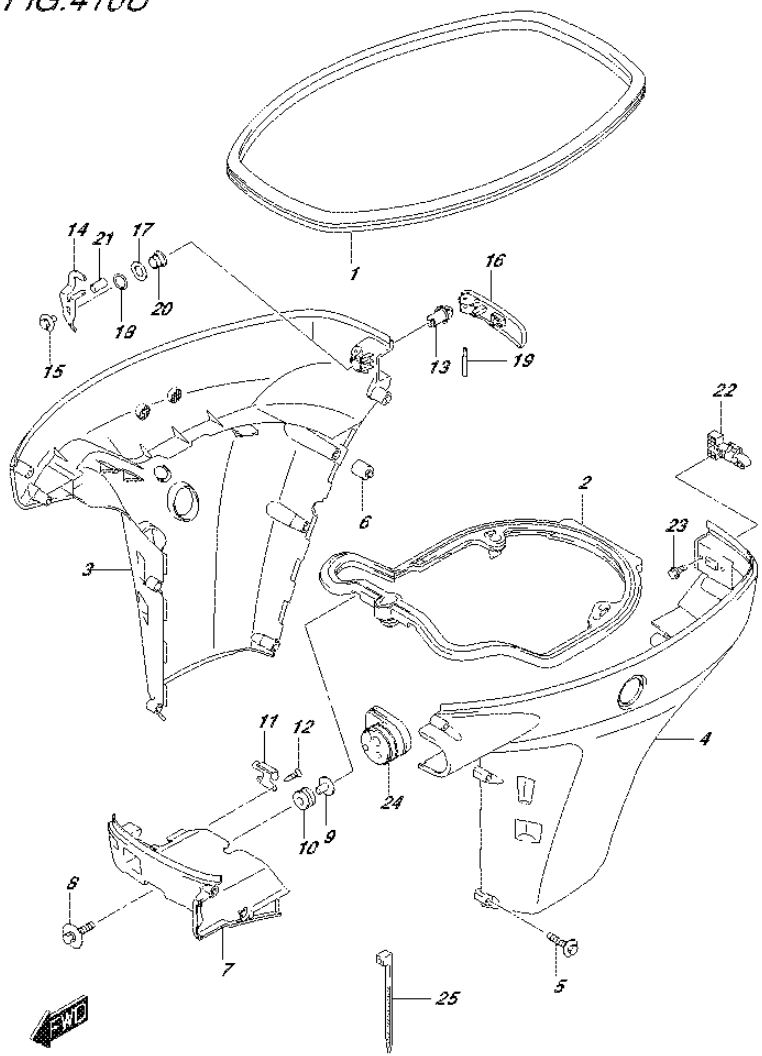

FIG.410U (3-K-14) SIDE COVER (DF60AVTH E40)

REF NO.	PART NO.	DESCRIPTION	Q'TY	REMARKS
1	61112-88L10	RUBBER, SIDE COVER	1	
2	61134-88L10	SEAL, SIDE COVER	1	
3-1	61811-88L30-0EP	COVER, SIDE STBD (S) (BLACK)	1	W/TRANSOM(L)
3-2	61811-88L20-0EP	COVER, SIDE STBD (BLACK)	1	W/TRANSOM(X)
4-1	61821-88L30-0EP	COVER, SIDE PORT (S) (BLACK)	1	W/TRANSOM(L)
4-2	61821-88L20-0EP	COVER, SIDE PORT (BLACK)	1	W/TRANSOM(X)
5-1	09136-06148	SCREW (6X35)	9	W/TRANSOM(L)
5-2	09136-06148	SCREW (6X35)	10	W/TRANSOM(X)
6	61151-88L00	CUSHION, SIDE COVER	1	
7	61831-88L10-0EP	PANEL, FRONT (BLACK)	1	
8	09116-08163	BOLT (8X38)	2	
9	09169-08039	WASHER	2	
10	09320-11013	CUSHION	2	
11	61412-88L00	HOOK, FRONT PANEL	1	
12	03542-05169	SCREW	2	
13	61632-93J00	SHAFT, ENGINE COVER HOOK	1	
14	61641-88L00	HOOK, ENGINE COVER	1	
15	09116-06127	BOLT (6X12)	1	
16	61633-88L00	LEVER, HOOK REAR	1	
17	09160-13014	WASHER (13.2X25X1)	1	
18	09164-14008	WASHER	1	
19	09202-04022	PIN	1	
20	09306-13007	BUSH	1	
21	09352-50901-600	HOSE (5X9X600)	1	L:600->20
22	61673-93J11	LATCH, HOOK LEVER	1	
23	09116-05010	BOLT (5X12)	2	
24	61124-88L10	GROMMET, REMOCON CABLE	1	
25	09407-25402	CLAMP (L:250)	1	

FIG.420A

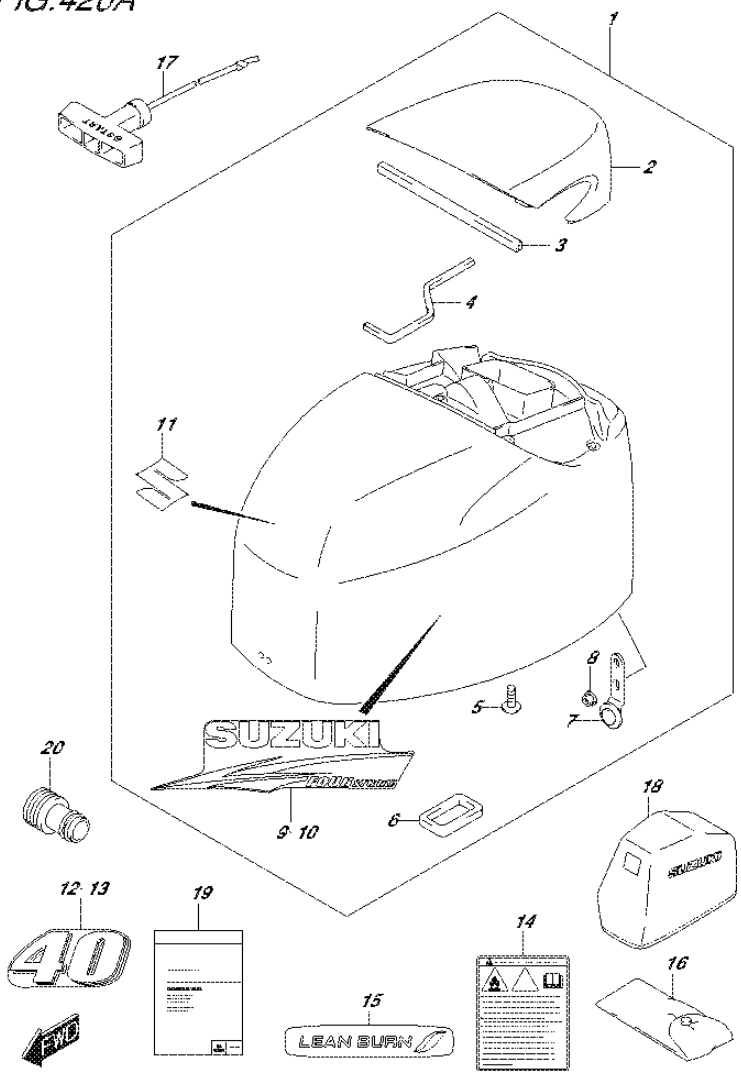

FIG.420A (3-K-15) ENGINE COVER (DF40A E01)

REF NO.	PART NO.	DESCRIPTION	Q'TY	REMARKS
1-1	61400-88805-0EP	COVER SET, ENGINE (BLACK)	1	
1-2	61400-88811-Y5S	COVER SET, ENGINE (WHITE)	1	
2-1	61431-88L10-0EP	.HANDLE, TILT UP (BLACK)	1	
2-2	61431-88L10-Y5S	.HANDLE, TILT UP (WHITE)	1	
3	61438-88L00	.SEAL, TILT UP HANDLE NO.1	1	
4	61439-88L00	.SEAL, TILT UP HANDLE NO.2	1	
5	03542-06169	.SCREW	5	
6	61476-88L00	.SEAL, AIR VENT	1	
7	61610-95J00	.FASTENER	1	
8	09159-06084	.NUT	1	
9-1	61443-88L02	.STRIPE, ENGINE COVER STBD	1	FOR 0EP
9-2	61443-88L10	.STRIPE, ENGINE COVER STBD	1	FOR Y5S
10-1	61453-88L02	.STRIPE, ENGINE COVER PORT	1	FOR 0EP
10-2	61453-88L10	.STRIPE, ENGINE COVER PORT	1	FOR Y5S
11	68111-18G20	.EMBLEM (S)	1	
12-1	61435-88L02	MARK, EMBLEM FRONT (40)	1	FOR 0EP
12-2	61435-88L30	MARK, EMBLEM FRONT (40)	1	FOR Y5S
13-1	61435-88L02	MARK, EMBLEM REAR (40)	1	FOR 0EP
13-2	61435-88L30	MARK, EMBLEM REAR (40)	1	FOR Y5S
14	61458-90J00	LABEL, ENGINE COVER	1	
15	61471-98J00	DECAL, LEAN BURN	1	
16	09800-81812	TOOL ASSY	1	
17	18210-88L00	KNOB ASSY, STARTER	1	
18	68110-88L00	COVER, WEATHER	1	OPT
19-1	99011-88L50-054	MANUAL, OWNER'S	1	
19-2	99011-88L50-059	MANUAL, OWNER'S	1	
20	17917-87L00	CONNECTOR, FLUSH WATER	1	

FIG.420B

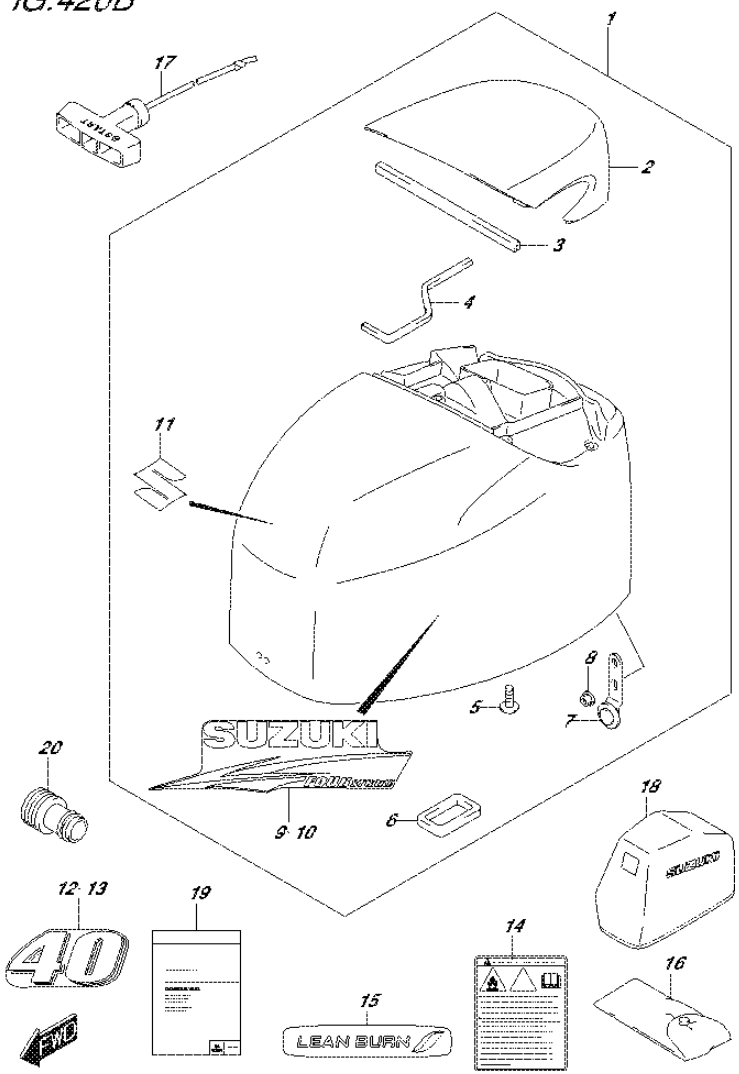

FIG.420B (3-L-2) ENGINE COVER (DF40AQH E01)

REF NO.	PART NO.	DESCRIPTION	Q'TY	REMARKS
1	61400-88805-0EP	COVER SET, ENGINE (BLACK)	1	
2	61431-88L10-0EP	.HANDLE, TILT UP (BLACK)	1	
3	61438-88L00	.SEAL, TILT UP HANDLE NO.1	1	
4	61439-88L00	.SEAL, TILT UP HANDLE NO.2	1	
5	03542-06169	.SCREW	5	
6	61476-88L00	.SEAL, AIR VENT	1	
7	61610-95J00	.FASTENER	1	
8	09159-06084	.NUT	1	
9	61443-88L02	.STRIPE, ENGINE COVER STBD	1	
10	61453-88L02	.STRIPE, ENGINE COVER PORT	1	
11	68111-18G20	.EMBLEM (S)	1	
12	61435-88L02	MARK, EMBLEM FRONT (40)	1	
13	61435-88L02	MARK, EMBLEM REAR (40)	1	
14	61458-90J00	LABEL, ENGINE COVER	1	
15	61471-98J00	DECAL, LEAN BURN	1	
16	09800-81812	TOOL ASSY	1	
17	18210-88L00	KNOB ASSY, STARTER	1	
18	68110-88L00	COVER, WEATHER	1	OPT
19-1	99011-88L50-054	MANUAL, OWNER'S	1	
19-2	99011-88L50-059	MANUAL, OWNER'S	1	
20	17917-87L00	CONNECTOR, FLUSH WATER	1	

FIG.420C

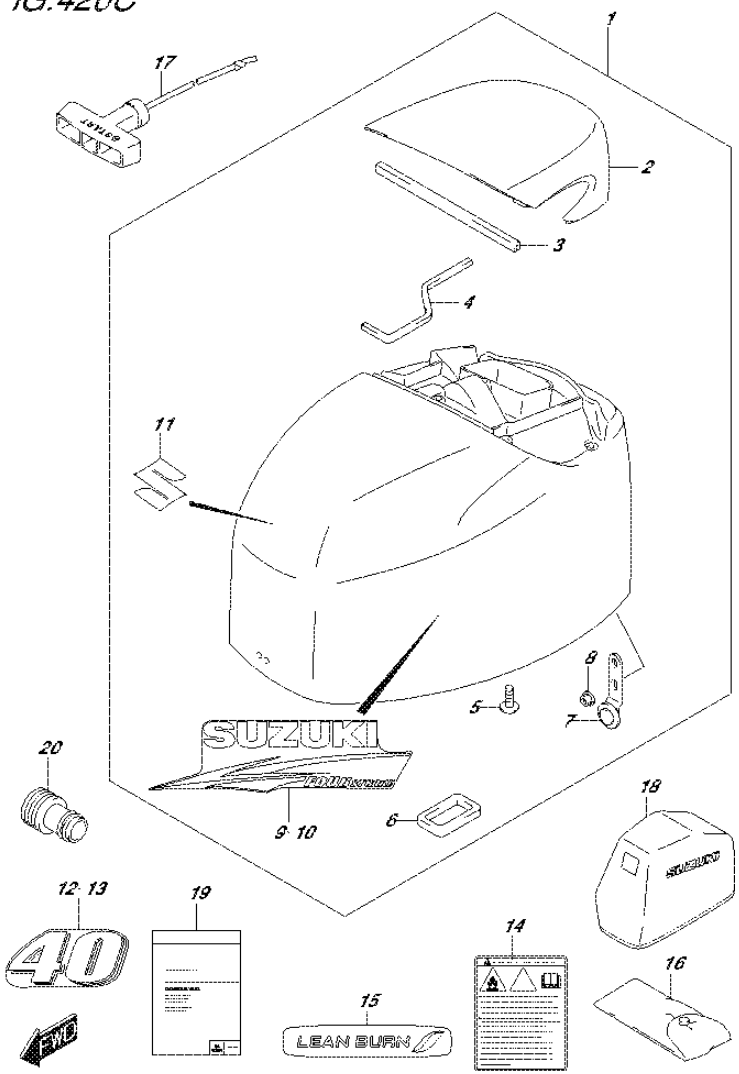

FIG.420C (3-L-3) ENGINE COVER (DF40ATH E01)

REF NO.	PART NO.	DESCRIPTION	Q'TY	REMARKS
1	61400-88805-0EP	COVER SET, ENGINE (BLACK)	1	
2	61431-88L10-0EP	.HANDLE, TILT UP (BLACK)	1	
3	61438-88L00	.SEAL, TILT UP HANDLE NO.1	1	
4	61439-88L00	.SEAL, TILT UP HANDLE NO.2	1	
5	03542-06169	.SCREW	5	
6	61476-88L00	.SEAL, AIR VENT	1	
7	61610-95J00	.FASTENER	1	
8	09159-06084	.NUT	1	
9	61443-88L02	.STRIPE, ENGINE COVER STBD	1	
10	61453-88L02	.STRIPE, ENGINE COVER PORT	1	
11	68111-18G20	.EMBLEM (S)	1	
12	61435-88L02	MARK, EMBLEM FRONT (40)	1	
13	61435-88L02	MARK, EMBLEM REAR (40)	1	
14	61458-90J00	LABEL, ENGINE COVER	1	
15	61471-98J00	DECAL, LEAN BURN	1	
16	09800-81812	TOOL ASSY	1	
17	18210-88L00	KNOB ASSY, STARTER	1	
18	68110-88L00	COVER, WEATHER	1	OPT
19-1	99011-88L50-054	MANUAL, OWNER'S	1	
19-2	99011-88L50-059	MANUAL, OWNER'S	1	
20	17917-87L00	CONNECTOR, FLUSH WATER	1	

FIG.420D

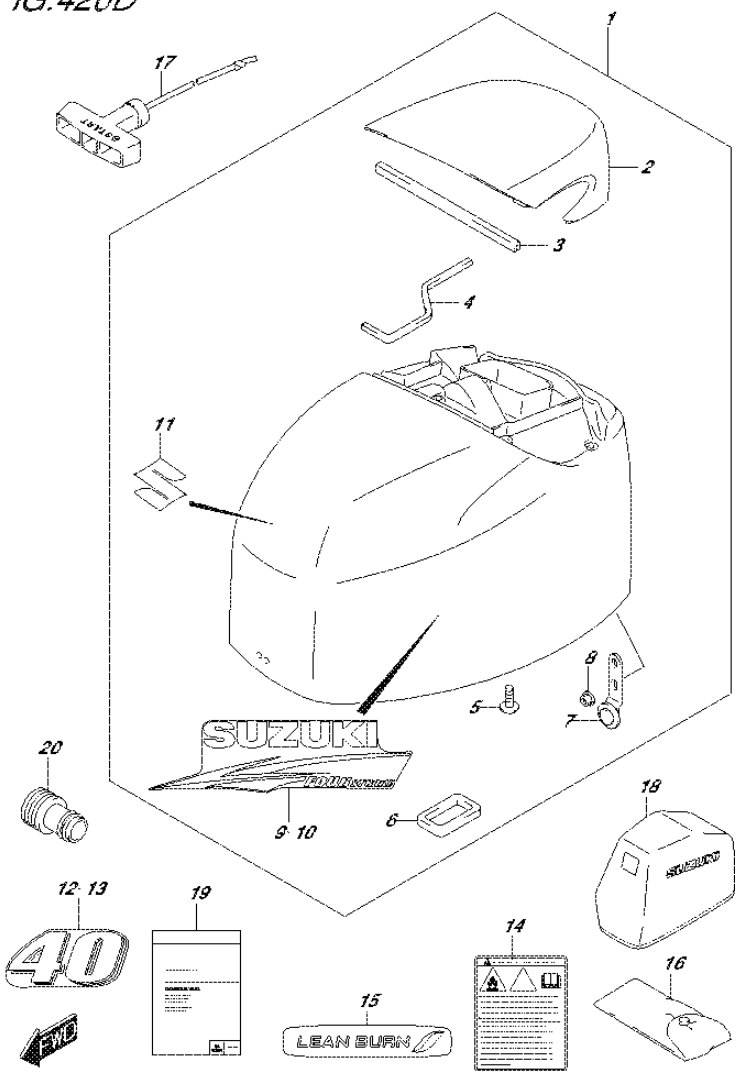

FIG.420D (3-L-4) ENGINE COVER (DF40AST E34)

REF NO.	PART NO.	DESCRIPTION	Q'TY	REMARKS
1-1	61400-88805-0EP	COVER SET, ENGINE (BLACK)	1	
1-2	61400-88811-Y5S	COVER SET, ENGINE (WHITE)	1	
2-1	61431-88L10-0EP	.HANDLE, TILT UP (BLACK)	1	
2-2	61431-88L10-Y5S	.HANDLE, TILT UP (WHITE)	1	
3	61438-88L00	.SEAL, TILT UP HANDLE NO.1	1	
4	61439-88L00	.SEAL, TILT UP HANDLE NO.2	1	
5	03542-06169	.SCREW	5	
6	61476-88L00	.SEAL, AIR VENT	1	
7	61610-95J00	.FASTENER	1	
8	09159-06084	.NUT	1	
9-1	61443-88L02	.STRIPE, ENGINE COVER STBD	1	FOR 0EP
9-2	61443-88L10	.STRIPE, ENGINE COVER STBD	1	FOR Y5S
10-1	61453-88L02	.STRIPE, ENGINE COVER PORT	1	FOR 0EP
10-2	61453-88L10	.STRIPE, ENGINE COVER PORT	1	FOR Y5S
11	68111-18G20	.EMBLEM (S)	1	
12-1	61435-88L02	MARK, EMBLEM FRONT (40)	1	FOR 0EP
12-2	61435-88L30	MARK, EMBLEM FRONT (40)	1	FOR Y5S
13-1	61435-88L02	MARK, EMBLEM REAR (40)	1	FOR 0EP
13-2	61435-88L30	MARK, EMBLEM REAR (40)	1	FOR Y5S
14	61458-90J00	LABEL, ENGINE COVER	1	
15	61471-98J00	DECAL, LEAN BURN	1	
16	09800-81812	TOOL ASSY	1	
17	18210-88L00	KNOB ASSY, STARTER	1	
18	68110-88L00	COVER, WEATHER	1	OPT
19	99011-88L50-054	MANUAL, OWNER'S	1	
20	17917-87L00	CONNECTOR, FLUSH WATER	1	

FIG.420E

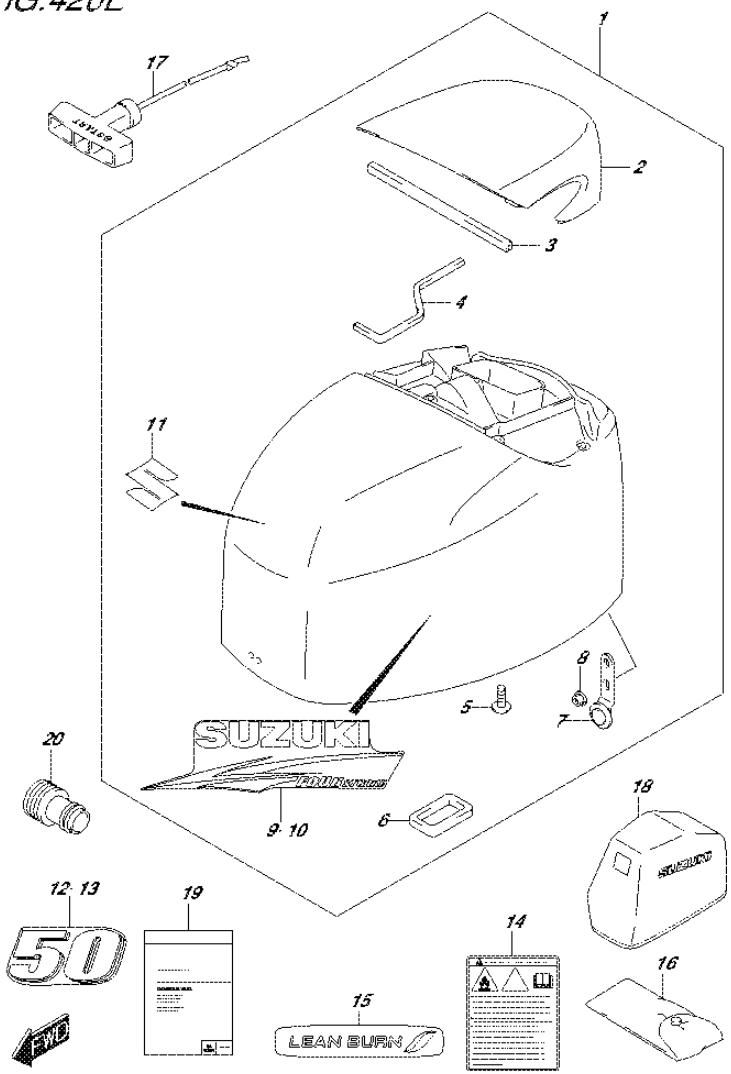

FIG.420E (3-L-5) ENGINE COVER (DF50A E01)

REF NO.	PART NO.	DESCRIPTION	Q'TY	REMARKS
1-1	61400-88805-0EP	COVER SET, ENGINE (BLACK)	1	
1-2	61400-88811-Y5S	COVER SET, ENGINE (WHITE)	1	
2-1	61431-88L10-0EP	.HANDLE, TILT UP (BLACK)	1	
2-2	61431-88L10-Y5S	.HANDLE, TILT UP (WHITE)	1	
3	61438-88L00	.SEAL, TILT UP HANDLE NO.1	1	
4	61439-88L00	.SEAL, TILT UP HANDLE NO.2	1	
5	03542-06169	.SCREW	5	
6	61476-88L00	.SEAL, AIR VENT	1	
7	61610-95J00	.FASTENER	1	
8	09159-06084	.NUT	1	
9-1	61443-88L02	.STRIPE, ENGINE COVER STBD	1	FOR 0EP
9-2	61443-88L10	.STRIPE, ENGINE COVER STBD	1	FOR Y5S
10-1	61453-88L02	.STRIPE, ENGINE COVER PORT	1	FOR 0EP
10-2	61453-88L10	.STRIPE, ENGINE COVER PORT	1	FOR Y5S
11	68111-18G20	.EMBLEM (S)	1	
12-1	61435-88L12	MARK, EMBLEM FRONT (50)	1	FOR 0EP
12-2	61435-88L40	MARK, EMBLEM FRONT (50)	1	FOR Y5S
13-1	61435-88L12	MARK, EMBLEM REAR (50)	1	FOR 0EP
13-2	61435-88L40	MARK, EMBLEM REAR (50)	1	FOR Y5S
14	61458-90J00	LABEL, ENGINE COVER	1	
15	61471-98J00	DECAL, LEAN BURN	1	
16	09800-81812	TOOL ASSY	1	
17	18210-88L00	KNOB ASSY, STARTER	1	
18	68110-88L00	COVER, WEATHER	1	OPT
19-1	99011-88L50-054	MANUAL, OWNER'S	1	
19-2	99011-88L50-059	MANUAL, OWNER'S	1	
20	17917-87L00	CONNECTOR, FLUSH WATER	1	

FIG.420F

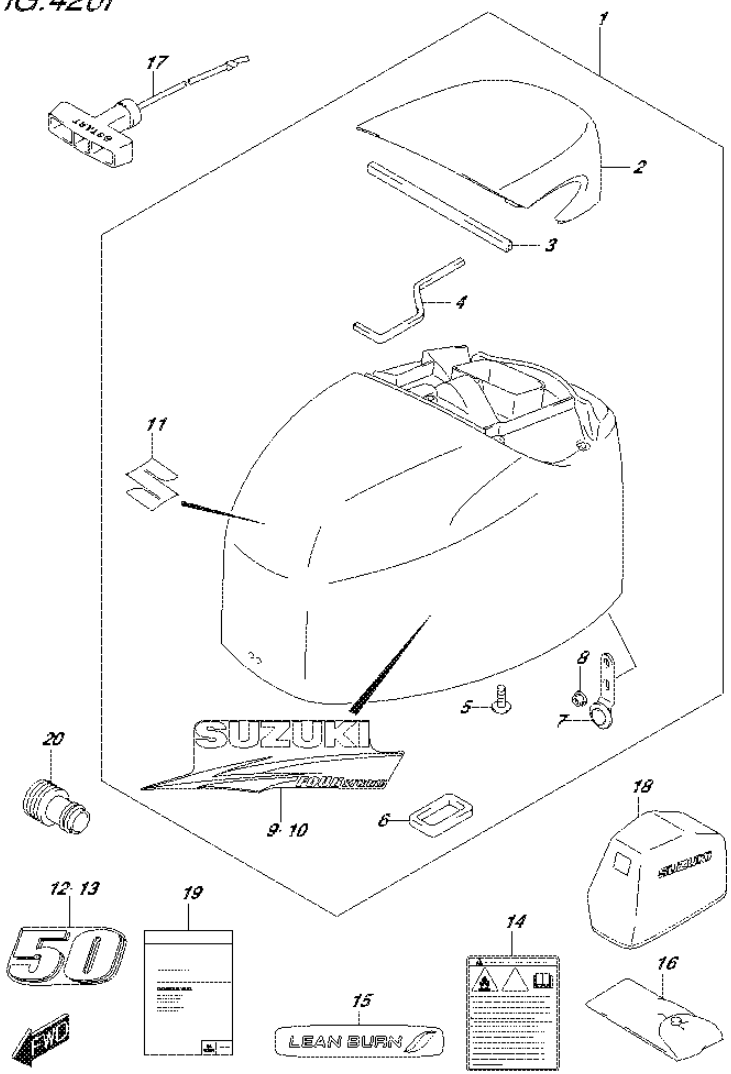

FIG.420F (3-L-6) ENGINE COVER (DF50ATH E01)

REF NO.	PART NO.	DESCRIPTION	Q'TY	REMARKS
1	61400-88805-0EP	COVER SET, ENGINE (BLACK)	1	
2	61431-88L10-0EP	.HANDLE, TILT UP (BLACK)	1	
3	61438-88L00	.SEAL, TILT UP HANDLE NO.1	1	
4	61439-88L00	.SEAL, TILT UP HANDLE NO.2	1	
5	03542-06169	.SCREW	5	
6	61476-88L00	.SEAL, AIR VENT	1	
7	61610-95J00	.FASTENER	1	
8	09159-06084	.NUT	1	
9	61443-88L02	.STRIPE, ENGINE COVER STBD	1	
10	61453-88L02	.STRIPE, ENGINE COVER PORT	1	
11	68111-18G20	.EMBLEM (S)	1	
12	61435-88L12	MARK, EMBLEM FRONT (50)	1	
13	61435-88L12	MARK, EMBLEM REAR (50)	1	
14	61458-90J00	LABEL, ENGINE COVER	1	
15	61471-98J00	DECAL, LEAN BURN	1	
16	09800-81812	TOOL ASSY	1	
17	18210-88L00	KNOB ASSY, STARTER	1	
18	68110-88L00	COVER, WEATHER	1	OPT
19-1	99011-88L50-054	MANUAL, OWNER'S	1	
19-2	99011-88L50-059	MANUAL, OWNER'S	1	
20	17917-87L00	CONNECTOR, FLUSH WATER	1	

FIG.420G

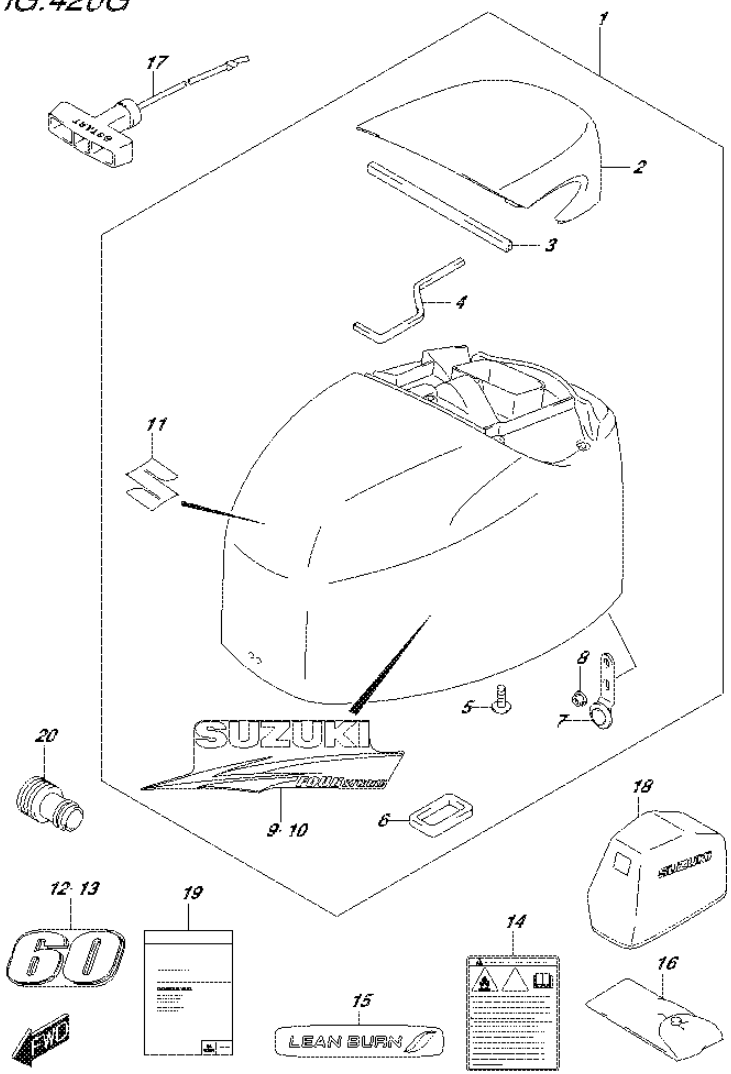

FIG.420G (3-L-7) ENGINE COVER (DF60A E01)

REF NO.	PART NO.	DESCRIPTION	Q'TY	REMARKS
1-1	61400-88805-0EP	COVER SET, ENGINE (BLACK)	1	
1-2	61400-88811-Y5S	COVER SET, ENGINE (WHITE)	1	
2-1	61431-88L10-0EP	.HANDLE, TILT UP (BLACK)	1	
2-2	61431-88L10-Y5S	.HANDLE, TILT UP (WHITE)	1	
3	61438-88L00	.SEAL, TILT UP HANDLE NO.1	1	
4	61439-88L00	.SEAL, TILT UP HANDLE NO.2	1	
5	03542-06169	.SCREW	5	
6	61476-88L00	.SEAL, AIR VENT	1	
7	61610-95J00	.FASTENER	1	
8	09159-06084	.NUT	1	
9-1	61443-88L02	.STRIPE, ENGINE COVER STBD	1	FOR 0EP
9-2	61443-88L10	.STRIPE, ENGINE COVER STBD	1	FOR Y5S
10-1	61453-88L02	.STRIPE, ENGINE COVER PORT	1	FOR 0EP
10-2	61453-88L10	.STRIPE, ENGINE COVER PORT	1	FOR Y5S
11	68111-18G20	.EMBLEM (S)	1	
12-1	61435-88L22	MARK, EMBLEM FRONT (60)	1	FOR 0EP
12-2	61435-88L50	MARK, EMBLEM FRONT (60)	1	FOR Y5S
13-1	61435-88L22	MARK, EMBLEM REAR (60)	1	FOR 0EP
13-2	61435-88L50	MARK, EMBLEM REAR (60)	1	FOR Y5S
14	61458-90J00	LABEL, ENGINE COVER	1	
15	61471-98J00	DECAL, LEAN BURN	1	
16	09800-81812	TOOL ASSY	1	
17	18210-88L00	KNOB ASSY, STARTER	1	
18	68110-88L00	COVER, WEATHER	1	OPT
19-1	99011-88L50-054	MANUAL, OWNER'S	1	
19-2	99011-88L50-059	MANUAL, OWNER'S	1	
20	17917-87L00	CONNECTOR, FLUSH WATER	1	

FIG.420H

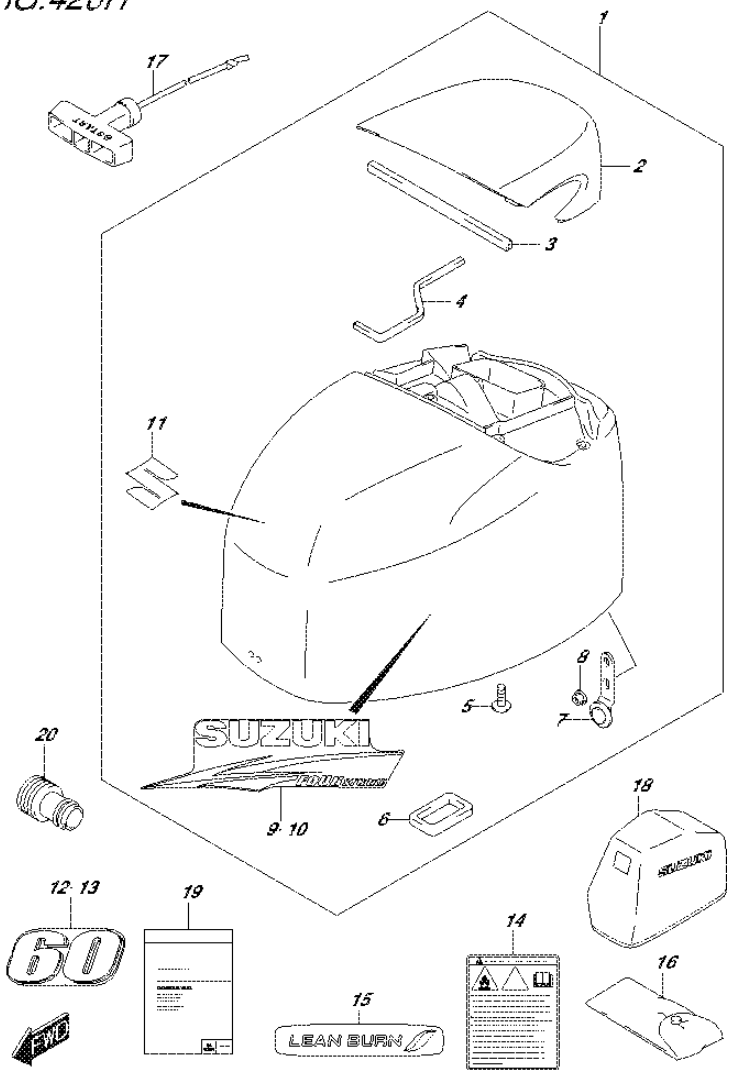

FIG.420H (3-L-8) ENGINE COVER (DF60A E40)

REF NO.	PART NO.	DESCRIPTION	Q'TY	REMARKS
1-1	61400-88805-0EP	COVER SET, ENGINE (BLACK)	1	
1-2	61400-88811-Y5S	COVER SET, ENGINE (WHITE)	1	
2-1	61431-88L10-0EP	.HANDLE, TILT UP (BLACK)	1	
2-2	61431-88L10-Y5S	.HANDLE, TILT UP (WHITE)	1	
3	61438-88L00	.SEAL, TILT UP HANDLE NO.1	1	
4	61439-88L00	.SEAL, TILT UP HANDLE NO.2	1	
5	03542-06169	.SCREW	5	
6	61476-88L00	.SEAL, AIR VENT	1	
7	61610-95J00	.FASTENER	1	
8	09159-06084	.NUT	1	
9-1	61443-88L02	.STRIPE, ENGINE COVER STBD	1	FOR 0EP
9-2	61443-88L10	.STRIPE, ENGINE COVER STBD	1	FOR Y5S
10-1	61453-88L02	.STRIPE, ENGINE COVER PORT	1	FOR 0EP
10-2	61453-88L10	.STRIPE, ENGINE COVER PORT	1	FOR Y5S
11	68111-18G20	.EMBLEM (S)	1	
12-1	61435-88L22	MARK, EMBLEM FRONT (60)	1	FOR 0EP
12-2	61435-88L50	MARK, EMBLEM FRONT (60)	1	FOR Y5S
13-1	61435-88L22	MARK, EMBLEM REAR (60)	1	FOR 0EP
13-2	61435-88L50	MARK, EMBLEM REAR (60)	1	FOR Y5S
14	61458-90J00	LABEL, ENGINE COVER	1	
15	61471-98J00	DECAL, LEAN BURN	1	
16	09800-81812	TOOL ASSY	1	
17	18210-88L00	KNOB ASSY, STARTER	1	
18	68110-88L00	COVER, WEATHER	1	OPT
19	99011-88L50-059	MANUAL, OWNER'S	1	
20	17917-87L00	CONNECTOR, FLUSH WATER	1	

FIG.420J

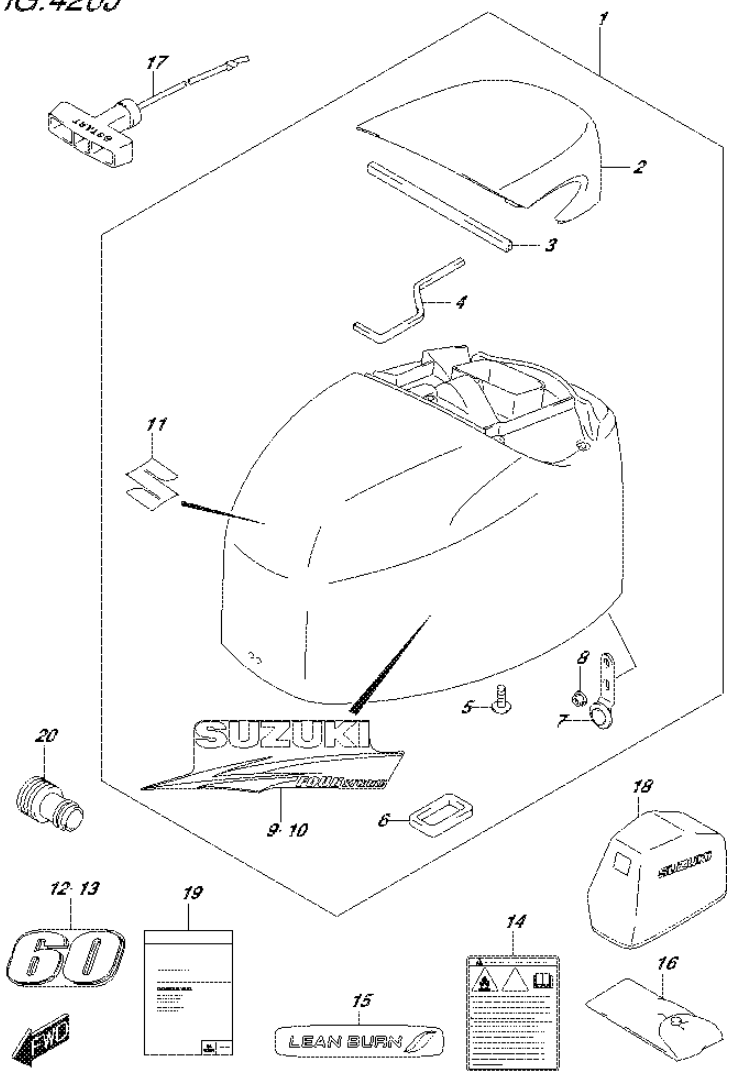

FIG.420J (3-L-9) ENGINE COVER (DF60AQH E01)

REF NO.	PART NO.	DESCRIPTION	Q'TY	REMARKS
1	61400-88805-0EP	COVER SET, ENGINE (BLACK)	1	
2	61431-88L10-0EP	.HANDLE, TILT UP (BLACK)	1	
3	61438-88L00	.SEAL, TILT UP HANDLE NO.1	1	
4	61439-88L00	.SEAL, TILT UP HANDLE NO.2	1	
5	03542-06169	.SCREW	5	
6	61476-88L00	.SEAL, AIR VENT	1	
7	61610-95J00	.FASTENER	1	
8	09159-06084	.NUT	1	
9	61443-88L02	.STRIPE, ENGINE COVER STBD	1	
10	61453-88L02	.STRIPE, ENGINE COVER PORT	1	
11	68111-18G20	.EMBLEM (S)	1	
12	61435-88L22	MARK, EMBLEM FRONT (60)	1	
13	61435-88L22	MARK, EMBLEM REAR (60)	1	
14	61458-90J00	LABEL, ENGINE COVER	1	
15	61471-98J00	DECAL, LEAN BURN	1	
16	09800-81812	TOOL ASSY	1	
17	18210-88L00	KNOB ASSY, STARTER	1	
18	68110-88L00	COVER, WEATHER	1	OPT
19-1	99011-88L50-054	MANUAL, OWNER'S	1	
19-2	99011-88L50-059	MANUAL, OWNER'S	1	
20	17917-87L00	CONNECTOR, FLUSH WATER	1	

FIG.420K

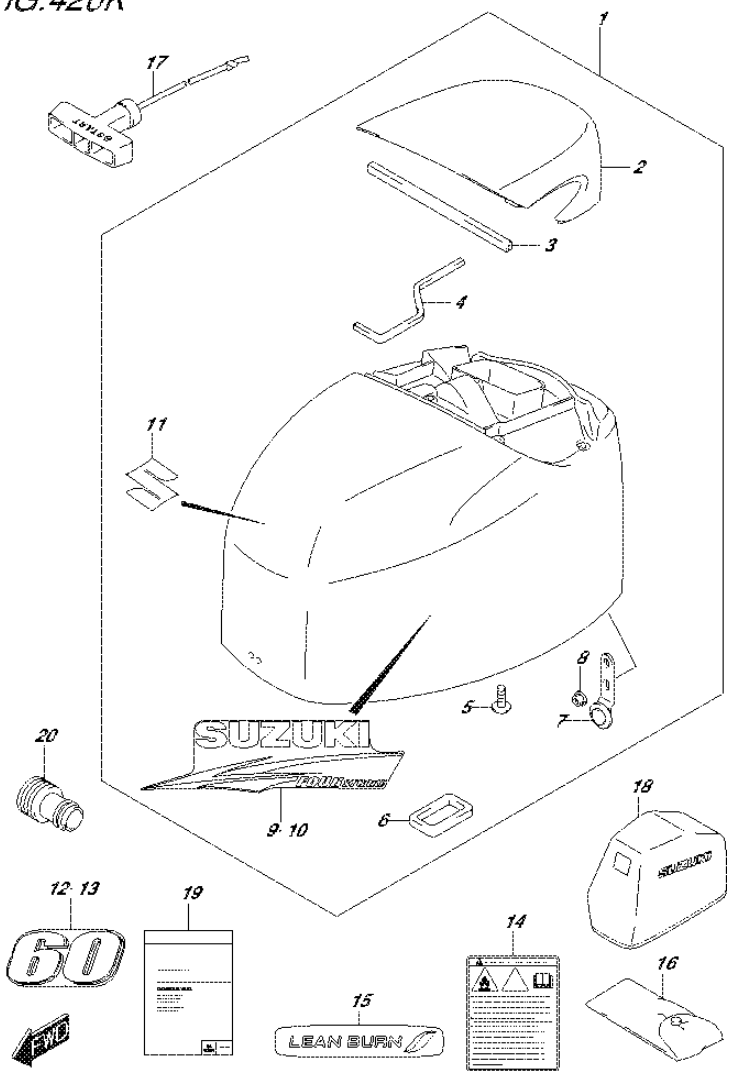

FIG.420K (3-L-10) ENGINE COVER (DF60AQH E40)

REF NO.	PART NO.	DESCRIPTION	Q'TY	REMARKS
1	61400-88805-0EP	COVER SET, ENGINE (BLACK)	1	
2	61431-88L10-0EP	.HANDLE, TILT UP (BLACK)	1	
3	61438-88L00	.SEAL, TILT UP HANDLE NO.1	1	
4	61439-88L00	.SEAL, TILT UP HANDLE NO.2	1	
5	03542-06169	.SCREW	5	
6	61476-88L00	.SEAL, AIR VENT	1	
7	61610-95J00	.FASTENER	1	
8	09159-06084	.NUT	1	
9	61443-88L02	.STRIPE, ENGINE COVER STBD	1	
10	61453-88L02	.STRIPE, ENGINE COVER PORT	1	
11	68111-18G20	.EMBLEM (S)	1	
12	61435-88L22	MARK, EMBLEM FRONT (60)	1	
13	61435-88L22	MARK, EMBLEM REAR (60)	1	
14	61458-90J00	LABEL, ENGINE COVER	1	
15	61471-98J00	DECAL, LEAN BURN	1	
16	09800-81812	TOOL ASSY	1	
17	18210-88L00	KNOB ASSY, STARTER	1	
18	68110-88L00	COVER, WEATHER	1	OPT
19	99011-88L50-059	MANUAL, OWNER'S	1	
20	17917-87L00	CONNECTOR, FLUSH WATER	1	

FIG.420L

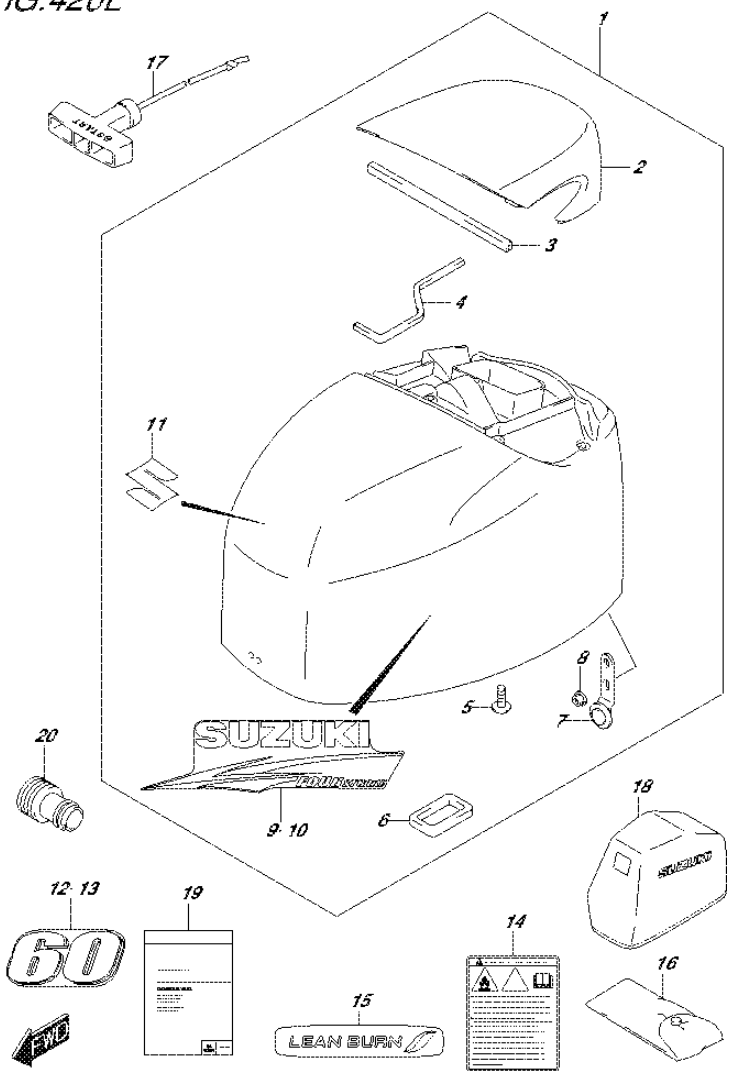

FIG.420L (3-L-11) ENGINE COVER (DF60ATH E01)

REF NO.	PART NO.	DESCRIPTION	Q'TY	REMARKS
1	61400-88805-0EP	COVER SET, ENGINE (BLACK)	1	
2	61431-88L10-0EP	.HANDLE, TILT UP (BLACK)	1	
3	61438-88L00	.SEAL, TILT UP HANDLE NO.1	1	
4	61439-88L00	.SEAL, TILT UP HANDLE NO.2	1	
5	03542-06169	.SCREW	5	
6	61476-88L00	.SEAL, AIR VENT	1	
7	61610-95J00	.FASTENER	1	
8	09159-06084	.NUT	1	
9	61443-88L02	.STRIPE, ENGINE COVER STBD	1	
10	61453-88L02	.STRIPE, ENGINE COVER PORT	1	
11	68111-18G20	.EMBLEM (S)	1	
12	61435-88L22	MARK, EMBLEM FRONT (60)	1	
13	61435-88L22	MARK, EMBLEM REAR (60)	1	
14	61458-90J00	LABEL, ENGINE COVER	1	
15	61471-98J00	DECAL, LEAN BURN	1	
16	09800-81812	TOOL ASSY	1	
17	18210-88L00	KNOB ASSY, STARTER	1	
18	68110-88L00	COVER, WEATHER	1	OPT
19-1	99011-88L50-054	MANUAL, OWNER'S	1	
19-2	99011-88L50-059	MANUAL, OWNER'S	1	
20	17917-87L00	CONNECTOR, FLUSH WATER	1	

FIG.420M

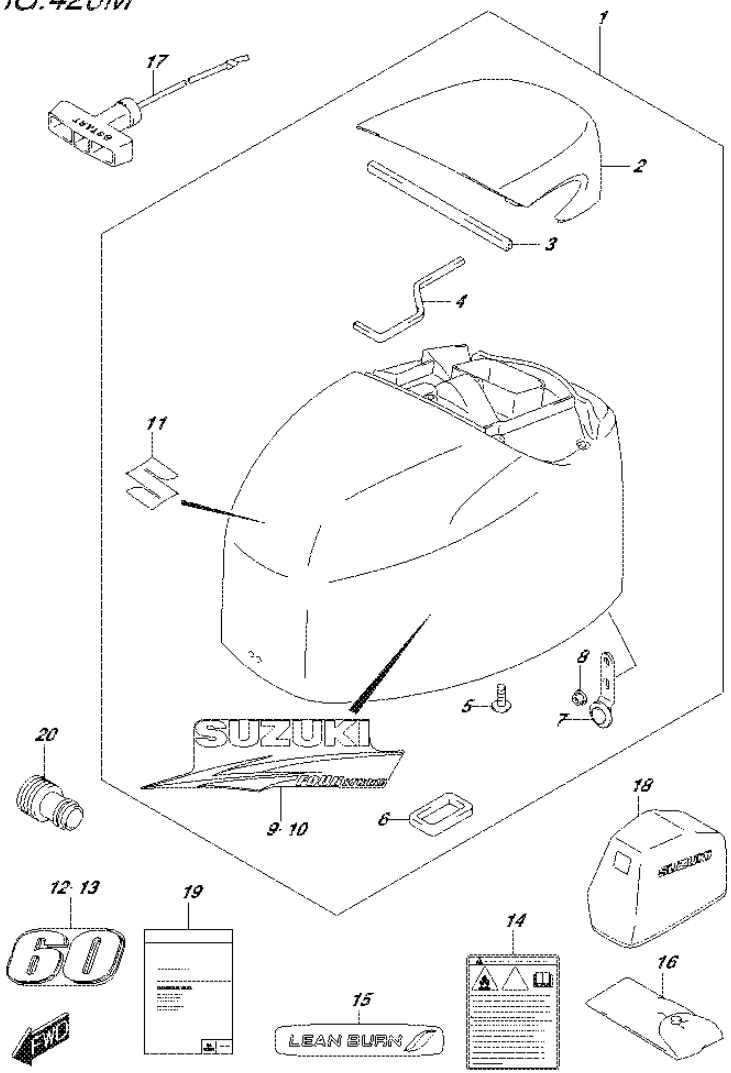

FIG.420M (3-L-12) ENGINE COVER (DF60ATH E40)

REF NO.	PART NO.	DESCRIPTION	Q'TY	REMARKS
1	61400-88805-0EP	COVER SET, ENGINE (BLACK)	1	
2	61431-88L10-0EP	.HANDLE, TILT UP (BLACK)	1	
3	61438-88L00	.SEAL, TILT UP HANDLE NO.1	1	
4	61439-88L00	.SEAL, TILT UP HANDLE NO.2	1	
5	03542-06169	.SCREW	5	
6	61476-88L00	.SEAL, AIR VENT	1	
7	61610-95J00	.FASTENER	1	
8	09159-06084	.NUT	1	
9	61443-88L02	.STRIPE, ENGINE COVER STBD	1	
10	61453-88L02	.STRIPE, ENGINE COVER PORT	1	
11	68111-18G20	.EMBLEM (S)	1	
12	61435-88L22	MARK, EMBLEM FRONT (60)	1	
13	61435-88L22	MARK, EMBLEM REAR (60)	1	
14	61458-90J00	LABEL, ENGINE COVER	1	
15	61471-98J00	DECAL, LEAN BURN	1	
16	09800-81812	TOOL ASSY	1	
17	18210-88L00	KNOB ASSY, STARTER	1	
18	68110-88L00	COVER, WEATHER	1	OPT
19	99011-88L50-059	MANUAL, OWNER'S	1	
20	17917-87L00	CONNECTOR, FLUSH WATER	1	

FIG.420N

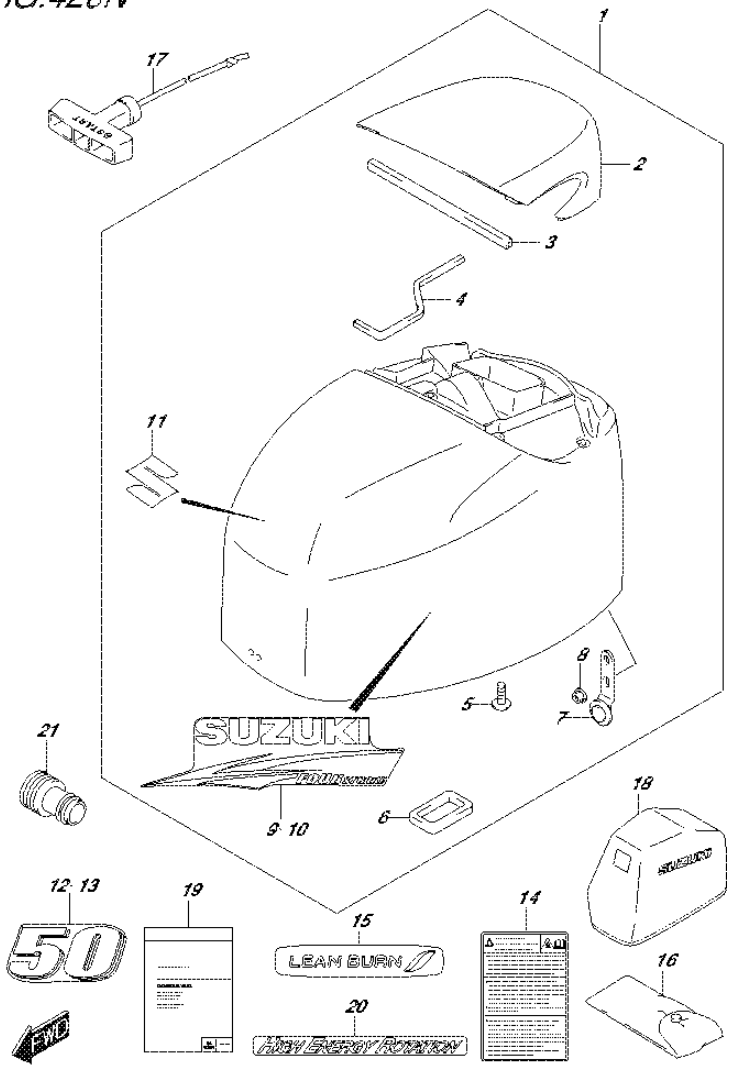

FIG.420N (3-L-13) ENGINE COVER (DF50AVT E01)

REF NO.	PART NO.	DESCRIPTION	Q'TY	REMARKS
1	61400-88805-0EP	COVER SET, ENGINE (BLACK)	1	
2	61431-88L10-0EP	.HANDLE, TILT UP (BLACK)	1	
3	61438-88L00	.SEAL, TILT UP HANDLE NO.1	1	
4	61439-88L00	.SEAL, TILT UP HANDLE NO.2	1	
5	03542-06169	.SCREW	5	
6	61476-88L00	.SEAL, AIR VENT	1	
7	61610-95J00	.FASTENER	1	
8	09159-06084	.NUT	1	
9	61443-88L02	.STRIPE, ENGINE COVER STBD	1	
10	61453-88L02	.STRIPE, ENGINE COVER PORT	1	
11	68111-18G20	.EMBLEM (S)	1	
12	61435-88L12	MARK, EMBLEM FRONT (50)	1	
13	61435-88L12	MARK, EMBLEM REAR (50)	1	
14	61458-90J00	LABEL, ENGINE COVER	1	
15	61471-98J00	DECAL, LEAN BURN	1	
16	09800-81812	TOOL ASSY	1	
17	18210-88L00	KNOB ASSY, STARTER	1	
18	68110-88L00	COVER, WEATHER	1	OPT
19-1	99011-88L50-054	MANUAL, OWNER'S	1	
19-2	99011-88L50-059	MANUAL, OWNER'S	1	
20	61473-88L00	DECAL (H.E.R)	1	
21	17917-87L00	CONNECTOR, FLUSH WATER	1	

FIG.420P

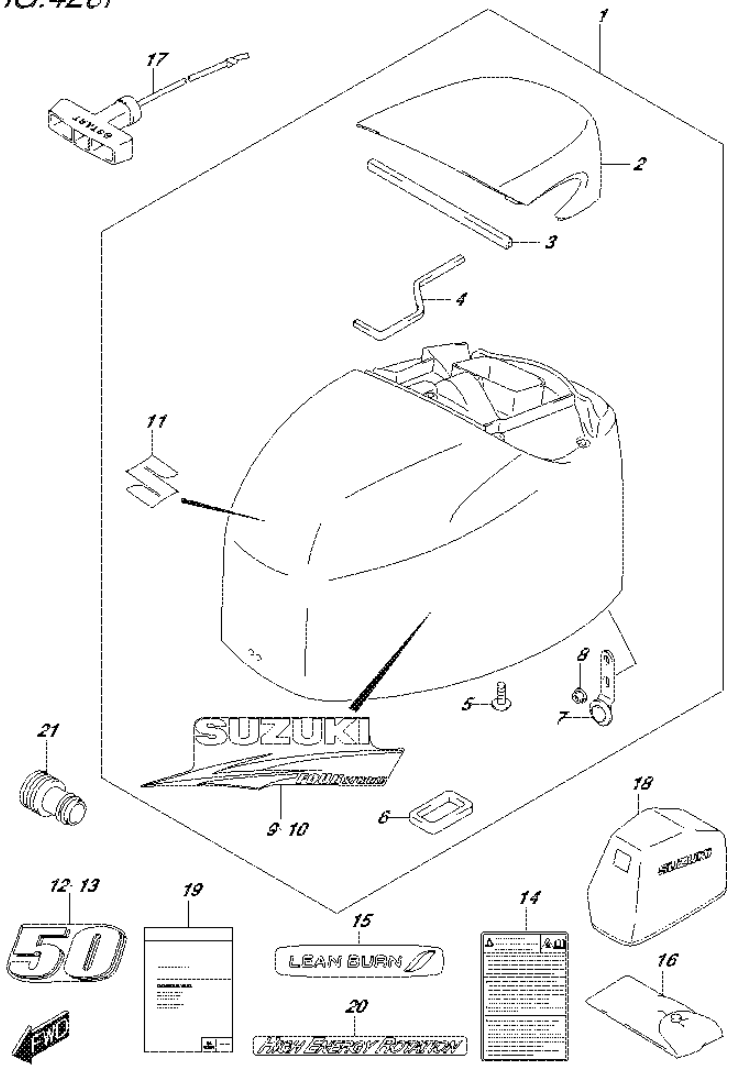

FIG.420P (3-L-14) ENGINE COVER (DF50AVTH E01)

REF NO.	PART NO.	DESCRIPTION	Q'TY	REMARKS
1	61400-88805-0EP	COVER SET, ENGINE (BLACK)	1	
2	61431-88L10-0EP	.HANDLE, TILT UP (BLACK)	1	
3	61438-88L00	.SEAL, TILT UP HANDLE NO.1	1	
4	61439-88L00	.SEAL, TILT UP HANDLE NO.2	1	
5	03542-06169	.SCREW	5	
6	61476-88L00	.SEAL, AIR VENT	1	
7	61610-95J00	.FASTENER	1	
8	09159-06084	.NUT	1	
9	61443-88L02	.STRIPE, ENGINE COVER STBD	1	
10	61453-88L02	.STRIPE, ENGINE COVER PORT	1	
11	68111-18G20	.EMBLEM (S)	1	
12	61435-88L12	MARK, EMBLEM FRONT (50)	1	
13	61435-88L12	MARK, EMBLEM REAR (50)	1	
14	61458-90J00	LABEL, ENGINE COVER	1	
15	61471-98J00	DECAL, LEAN BURN	1	
16	09800-81812	TOOL ASSY	1	
17	18210-88L00	KNOB ASSY, STARTER	1	
18	68110-88L00	COVER, WEATHER	1	OPT
19-1	99011-88L50-054	MANUAL, OWNER'S	1	
19-2	99011-88L50-059	MANUAL, OWNER'S	1	
20	61473-88L00	DECAL (H.E.R)	1	
21	17917-87L00	CONNECTOR, FLUSH WATER	1	

FIG.420R

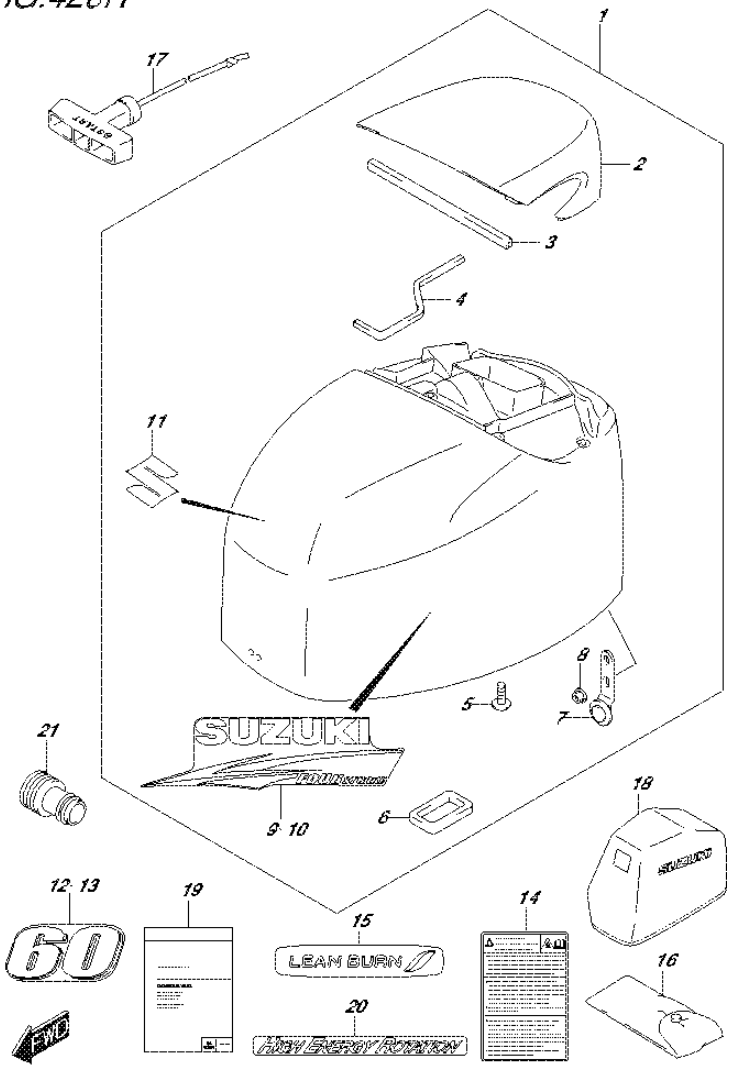

FIG.420R (3-L-15) ENGINE COVER (DF60AVT E01)

REF NO.	PART NO.	DESCRIPTION	Q'TY	REMARKS
1	61400-88805-0EP	COVER SET, ENGINE (BLACK)	1	
2	61431-88L10-0EP	.HANDLE, TILT UP (BLACK)	1	
3	61438-88L00	.SEAL, TILT UP HANDLE NO.1	1	
4	61439-88L00	.SEAL, TILT UP HANDLE NO.2	1	
5	03542-06169	.SCREW	5	
6	61476-88L00	.SEAL, AIR VENT	1	
7	61610-95J00	.FASTENER	1	
8	09159-06084	.NUT	1	
9	61443-88L02	.STRIPE, ENGINE COVER STBD	1	
10	61453-88L02	.STRIPE, ENGINE COVER PORT	1	
11	68111-18G20	.EMBLEM (S)	1	
12	61435-88L22	MARK, EMBLEM FRONT (60)	1	
13	61435-88L22	MARK, EMBLEM REAR (60)	1	
14	61458-90J00	LABEL, ENGINE COVER	1	
15	61471-98J00	DECAL, LEAN BURN	1	
16	09800-81812	TOOL ASSY	1	
17	18210-88L00	KNOB ASSY, STARTER	1	
18	68110-88L00	COVER, WEATHER	1	OPT
19-1	99011-88L50-054	MANUAL, OWNER'S	1	
19-2	99011-88L50-059	MANUAL, OWNER'S	1	
20	61473-88L00	DECAL (H.E.R)	1	
21	17917-87L00	CONNECTOR, FLUSH WATER	1	

FIG.420S

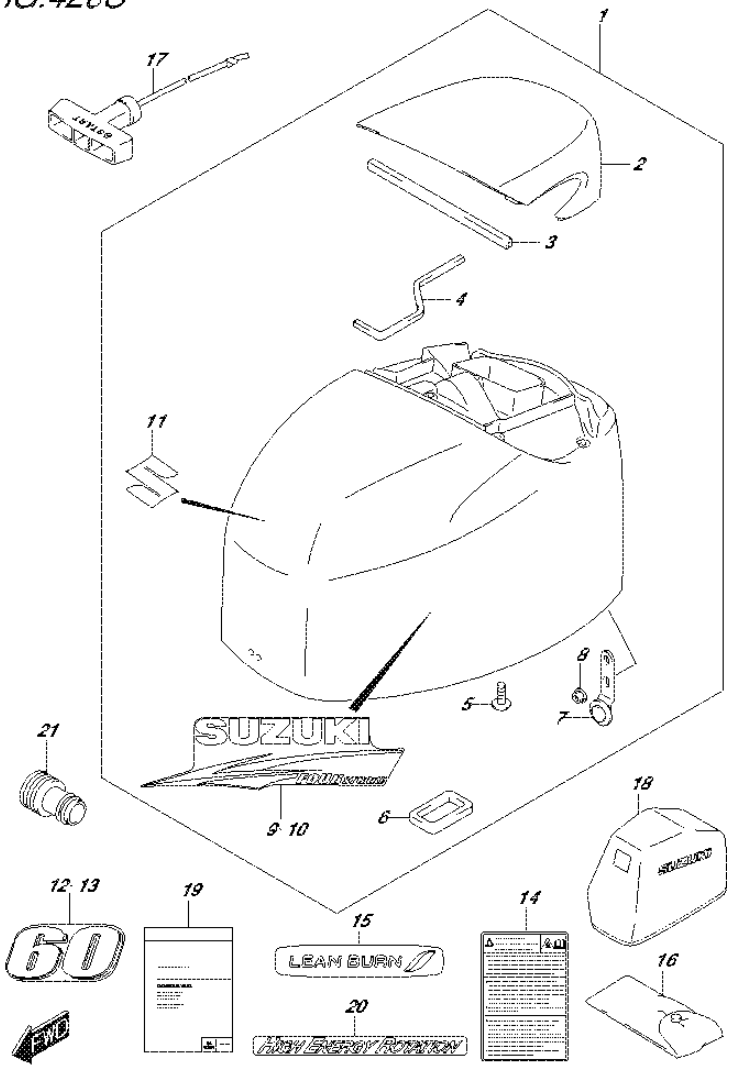

FIG.420S (4-B-2) ENGINE COVER (DF60AVT E40)

REF NO.	PART NO.	DESCRIPTION	Q'TY	REMARKS
1	61400-88805-0EP	COVER SET, ENGINE (BLACK)	1	
2	61431-88L10-0EP	.HANDLE, TILT UP (BLACK)	1	
3	61438-88L00	.SEAL, TILT UP HANDLE NO.1	1	
4	61439-88L00	.SEAL, TILT UP HANDLE NO.2	1	
5	03542-06169	.SCREW	5	
6	61476-88L00	.SEAL, AIR VENT	1	
7	61610-95J00	.FASTENER	1	
8	09159-06084	.NUT	1	
9	61443-88L02	.STRIPE, ENGINE COVER STBD	1	
10	61453-88L02	.STRIPE, ENGINE COVER PORT	1	
11	68111-18G20	.EMBLEM (S)	1	
12	61435-88L22	MARK, EMBLEM FRONT (60)	1	
13	61435-88L22	MARK, EMBLEM REAR (60)	1	
14	61458-90J00	LABEL, ENGINE COVER	1	
15	61471-98J00	DECAL, LEAN BURN	1	
16	09800-81812	TOOL ASSY	1	
17	18210-88L00	KNOB ASSY, STARTER	1	
18	68110-88L00	COVER, WEATHER	1	OPT
19	99011-88L50-059	MANUAL, OWNER'S	1	
20	61473-88L00	DECAL (H.E.R)	1	
21	17917-87L00	CONNECTOR, FLUSH WATER	1	

FIG.420T

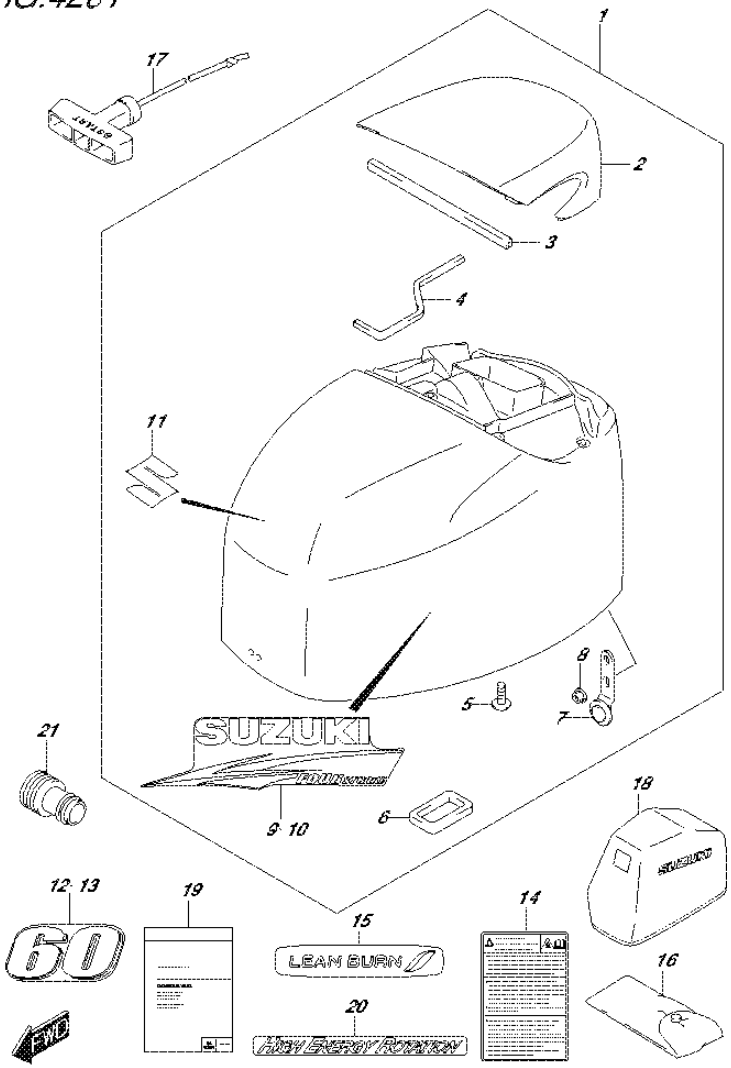

FIG.420T (4-B-3) ENGINE COVER (DF60AVTH E01)

REF NO.	PART NO.	DESCRIPTION	Q'TY	REMARKS
1	61400-88805-0EP	COVER SET, ENGINE (BLACK)	1	
2	61431-88L10-0EP	.HANDLE, TILT UP (BLACK)	1	
3	61438-88L00	.SEAL, TILT UP HANDLE NO.1	1	
4	61439-88L00	.SEAL, TILT UP HANDLE NO.2	1	
5	03542-06169	.SCREW	5	
6	61476-88L00	.SEAL, AIR VENT	1	
7	61610-95J00	.FASTENER	1	
8	09159-06084	.NUT	1	
9	61443-88L02	.STRIPE, ENGINE COVER STBD	1	
10	61453-88L02	.STRIPE, ENGINE COVER PORT	1	
11	68111-18G20	.EMBLEM (S)	1	
12	61435-88L22	MARK, EMBLEM FRONT (60)	1	
13	61435-88L22	MARK, EMBLEM REAR (60)	1	
14	61458-90J00	LABEL, ENGINE COVER	1	
15	61471-98J00	DECAL, LEAN BURN	1	
16	09800-81812	TOOL ASSY	1	
17	18210-88L00	KNOB ASSY, STARTER	1	
18	68110-88L00	COVER, WEATHER	1	OPT
19-1	99011-88L50-054	MANUAL, OWNER'S	1	
19-2	99011-88L50-059	MANUAL, OWNER'S	1	
20	61473-88L00	DECAL (H.E.R)	1	
21	17917-87L00	CONNECTOR, FLUSH WATER	1	

FIG.420U

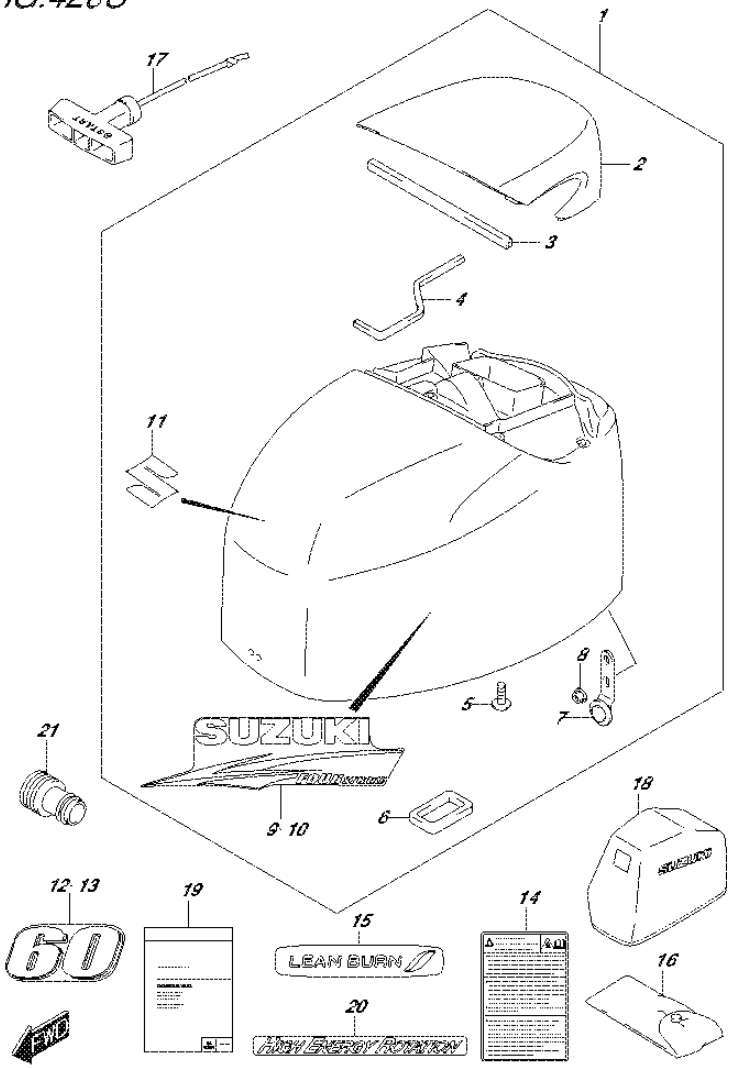

FIG.420U (4-B-4) ENGINE COVER (DF60AVTH E40)

REF NO.	PART NO.	DESCRIPTION	Q'TY	REMARKS
1	61400-88805-0EP	COVER SET, ENGINE (BLACK)	1	
2	61431-88L10-0EP	.HANDLE, TILT UP (BLACK)	1	
3	61438-88L00	.SEAL, TILT UP HANDLE NO.1	1	
4	61439-88L00	.SEAL, TILT UP HANDLE NO.2	1	
5	03542-06169	.SCREW	5	
6	61476-88L00	.SEAL, AIR VENT	1	
7	61610-95J00	.FASTENER	1	
8	09159-06084	.NUT	1	
9	61443-88L02	.STRIPE, ENGINE COVER STBD	1	
10	61453-88L02	.STRIPE, ENGINE COVER PORT	1	
11	68111-18G20	.EMBLEM (S)	1	
12	61435-88L22	MARK, EMBLEM FRONT (60)	1	
13	61435-88L22	MARK, EMBLEM REAR (60)	1	
14	61458-90J00	LABEL, ENGINE COVER	1	
15	61471-98J00	DECAL, LEAN BURN	1	
16	09800-81812	TOOL ASSY	1	
17	18210-88L00	KNOB ASSY, STARTER	1	
18	68110-88L00	COVER, WEATHER	1	OPT
19	99011-88L50-059	MANUAL, OWNER'S	1	
20	61473-88L00	DECAL (H.E.R)	1	
21	17917-87L00	CONNECTOR, FLUSH WATER	1	

FIG.432A

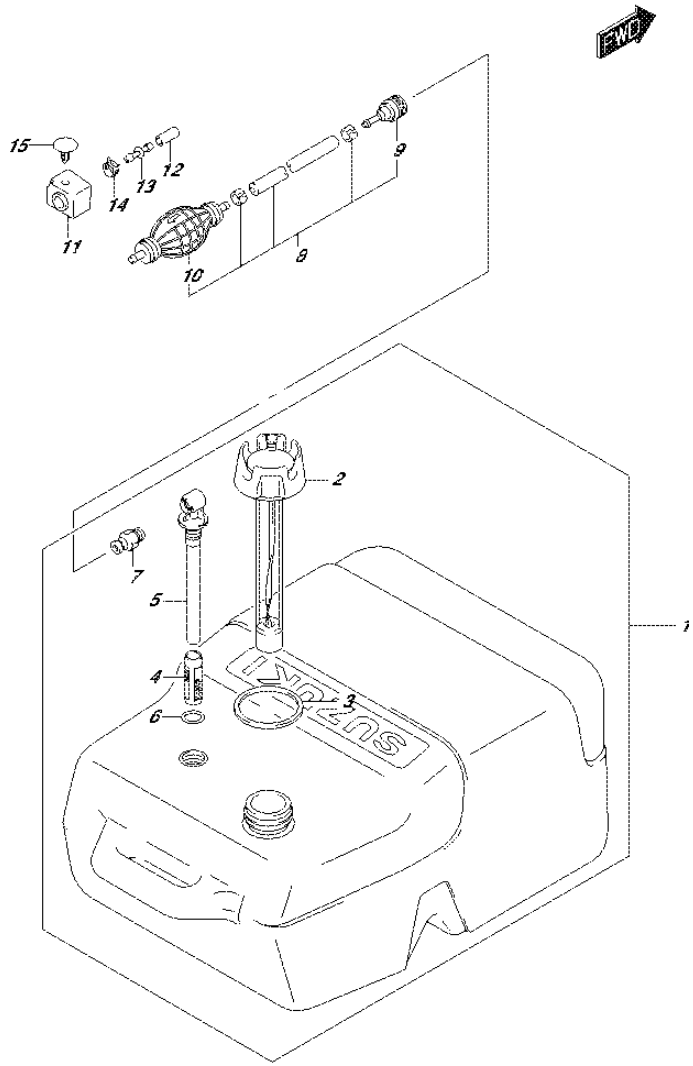

FIG.432A (4-B-5) FUEL TANK

REF NO.	PART NO.	DESCRIPTION	Q'TY	REMARKS
1	65000-95D01	TANK ASSY, FUEL (25L)	1	
2	65520-95D01	.CAP ASSY, FUEL TANK	1	
3	65561-95D00	.GASKET, TANK CAP	1	
4	65831-95D00	.FILTER, OUTLET	1	
5	65890-95D00	.OUTLET ASSY	1	
6	65892-95D00	.O RING, FUEL OUTLET	1	
7	65740-95D01	.PLUG, FUEL CONNECTOR	1	
8	65700-90J14	HOSE, FUEL	1	
9	65750-955L0	.SOCKET	1	
10	65770-90J11	.PUMP, SQUEEZE	1	
11	61188-88L00	GROMMET, FUEL HOSE	1	
12	09251-07003	CAP (OD:11.5)	1	
13	09367-08001	JOINT	1	
14	09401-11423	CLIP	1	
15	09409-05312-6GS	CLIP (GRAY)	1	

FIG.442A

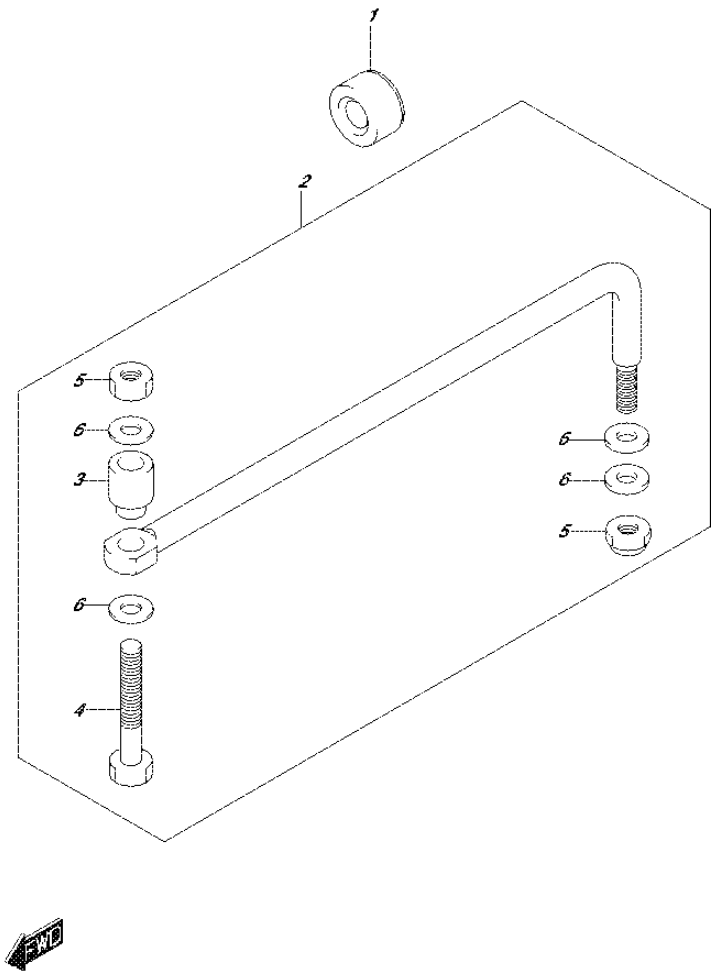

FIG.442A (4-B-6) DRAG LINK (DF40A E01)

REF NO.	PART NO.	DESCRIPTION	Q'TY	REMARKS
1	41161-94400	SEAL, STEERING CABLE	1	
2	67701-87J11	LINK, DRAG	1	
3	67721-87J00	.SPACER	1	
4	67725-99E00	.BOLT, DRAG LINK	1	
5	67726-99E00	.NUT	2	
6	67728-99E00	.WASHER	4	

FIG.442B

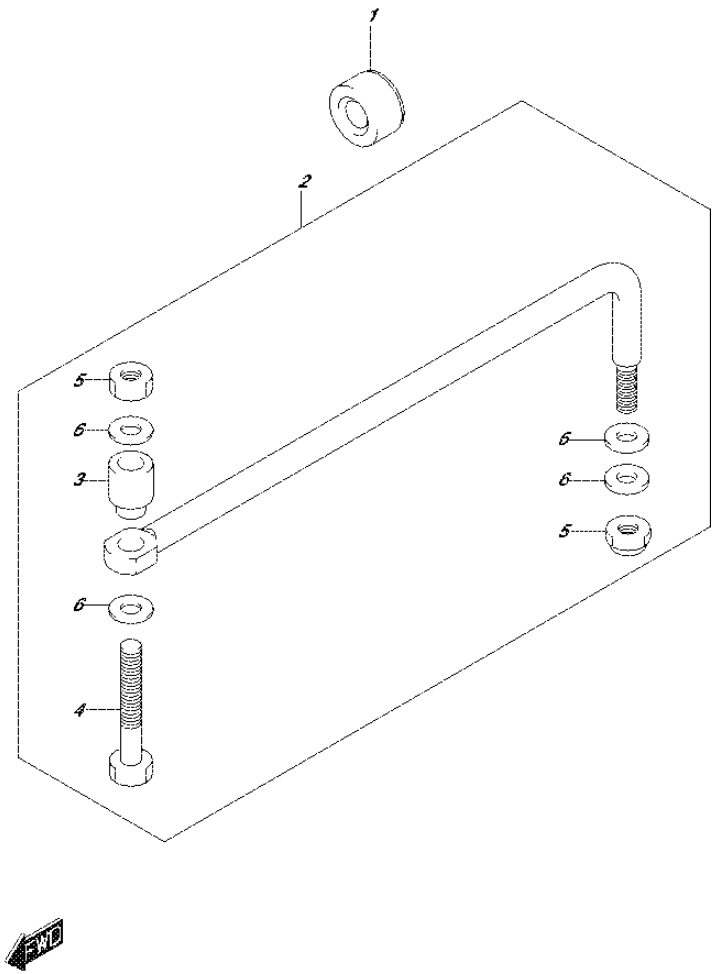

FIG.442B (4-B-7) DRAG LINK (DF40AST E34)

REF NO.	PART NO.	DESCRIPTION	Q'TY	REMARKS
1	41161-94400	SEAL, STEERING CABLE	1	
2	67701-87J11	LINK, DRAG	1	
3	67721-87J00	.SPACER	1	
4	67725-99E00	.BOLT, DRAG LINK	1	
5	67726-99E00	.NUT	2	
6	67728-99E00	.WASHER	4	

FIG.442C

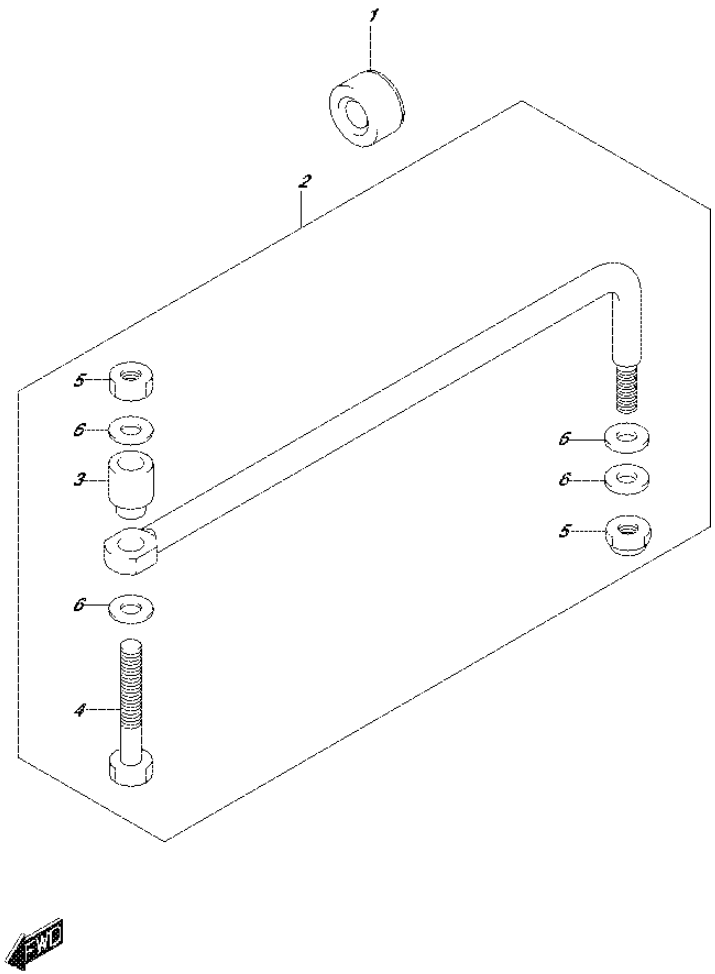

FIG.442C (4-B-8) DRAG LINK (DF50A E01)

REF NO.	PART NO.	DESCRIPTION	Q'TY	REMARKS
1	41161-94400	SEAL, STEERING CABLE	1	
2	67701-87J11	LINK, DRAG	1	
3	67721-87J00	.SPACER	1	
4	67725-99E00	.BOLT, DRAG LINK	1	
5	67726-99E00	.NUT	2	
6	67728-99E00	.WASHER	4	

FIG.442D

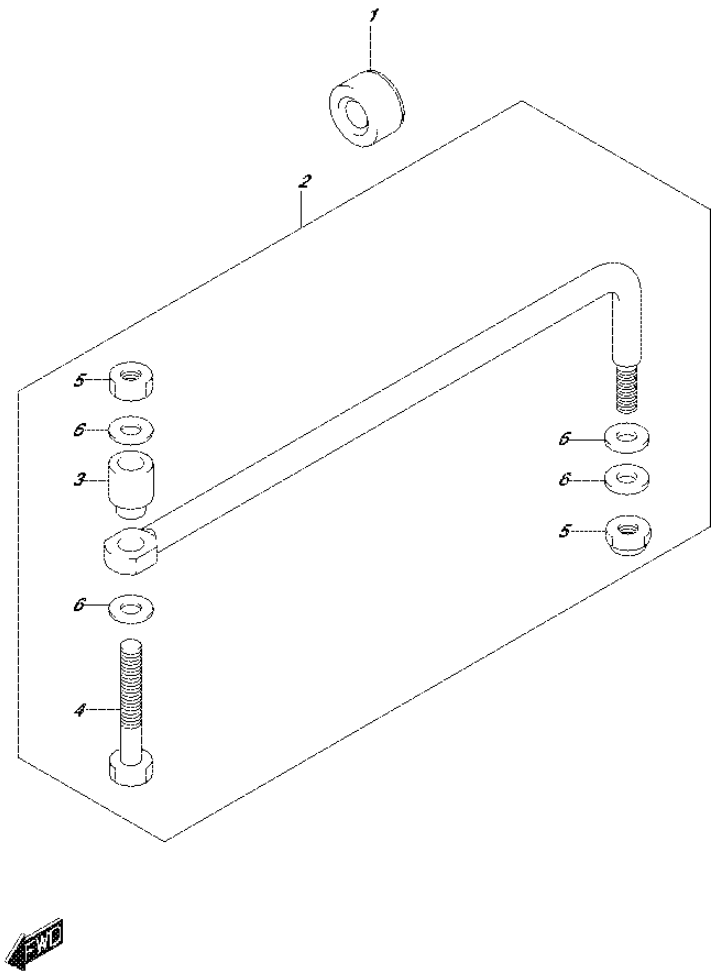

FIG.442D (4-B-9) DRAG LINK (DF60A E01)

REF NO.	PART NO.	DESCRIPTION	Q'TY	REMARKS
1	41161-94400	SEAL, STEERING CABLE	1	
2	67701-87J11	LINK, DRAG	1	
3	67721-87J00	.SPACER	1	
4	67725-99E00	.BOLT, DRAG LINK	1	
5	67726-99E00	.NUT	2	
6	67728-99E00	.WASHER	4	

FIG.442E

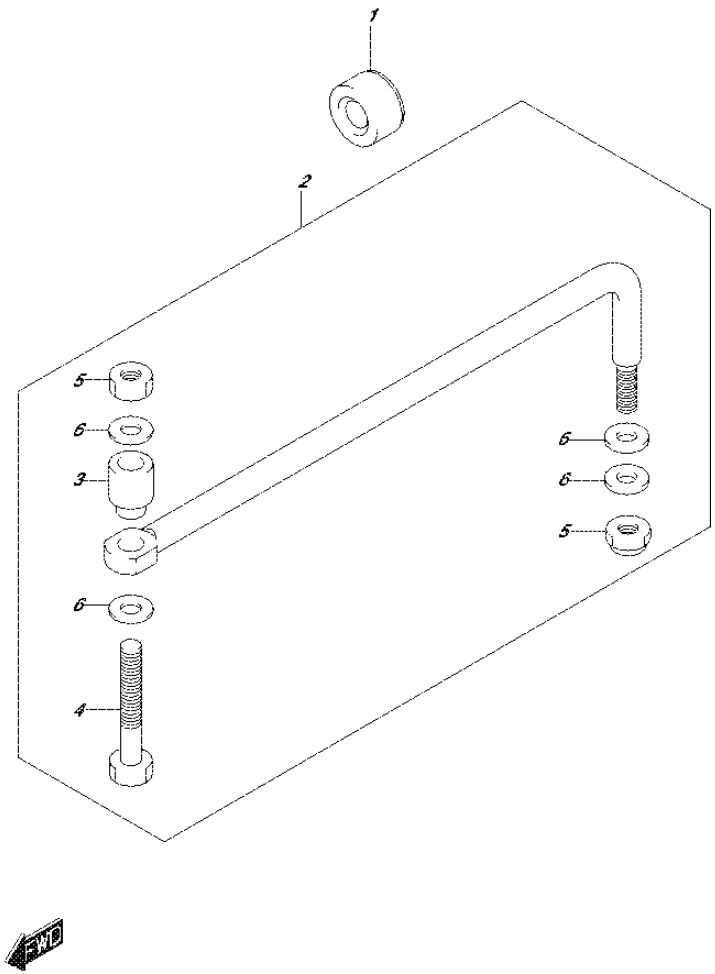

FIG.442E (4-B-10) DRAG LINK (DF60A E40)

REF NO.	PART NO.	DESCRIPTION	Q'TY	REMARKS
1	41161-94400	SEAL, STEERING CABLE	1	
2	67701-87J11	LINK, DRAG	1	
3	67721-87J00	.SPACER	1	
4	67725-99E00	.BOLT, DRAG LINK	1	
5	67726-99E00	.NUT	2	
6	67728-99E00	.WASHER	4	

FIG.442F

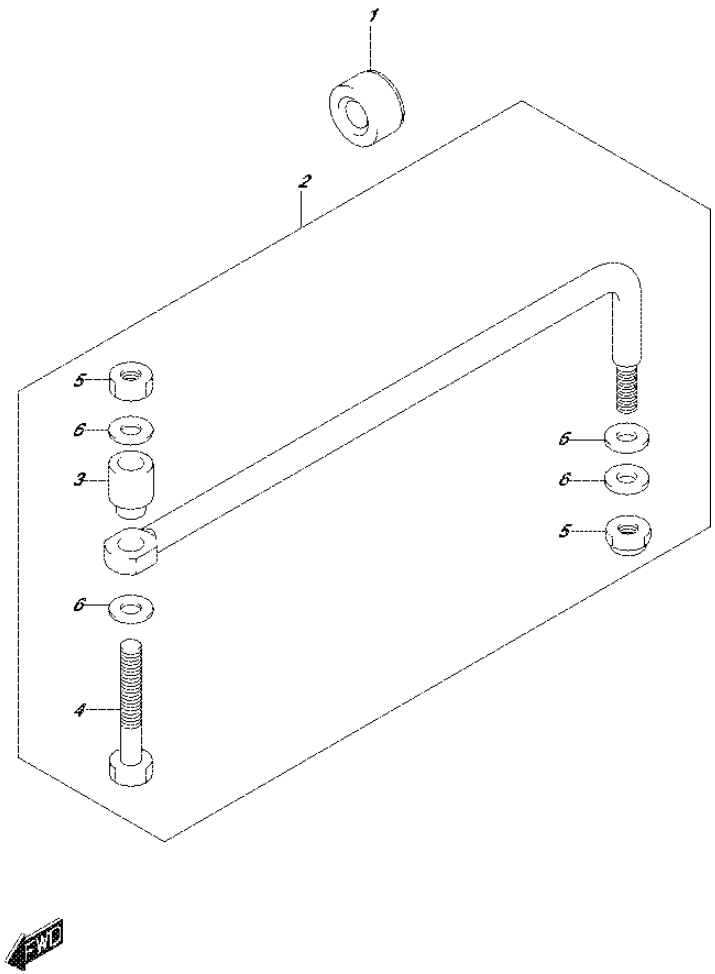

FIG.442F (4-B-11) DRAG LINK (DF50AVT E01)

REF NO.	PART NO.	DESCRIPTION	Q'TY	REMARKS
1	41161-94400	SEAL, STEERING CABLE	1	
2	67701-87J11	LINK, DRAG	1	
3	67721-87J00	.SPACER	1	
4	67725-99E00	.BOLT, DRAG LINK	1	
5	67726-99E00	.NUT	2	
6	67728-99E00	.WASHER	4	

FIG.442G

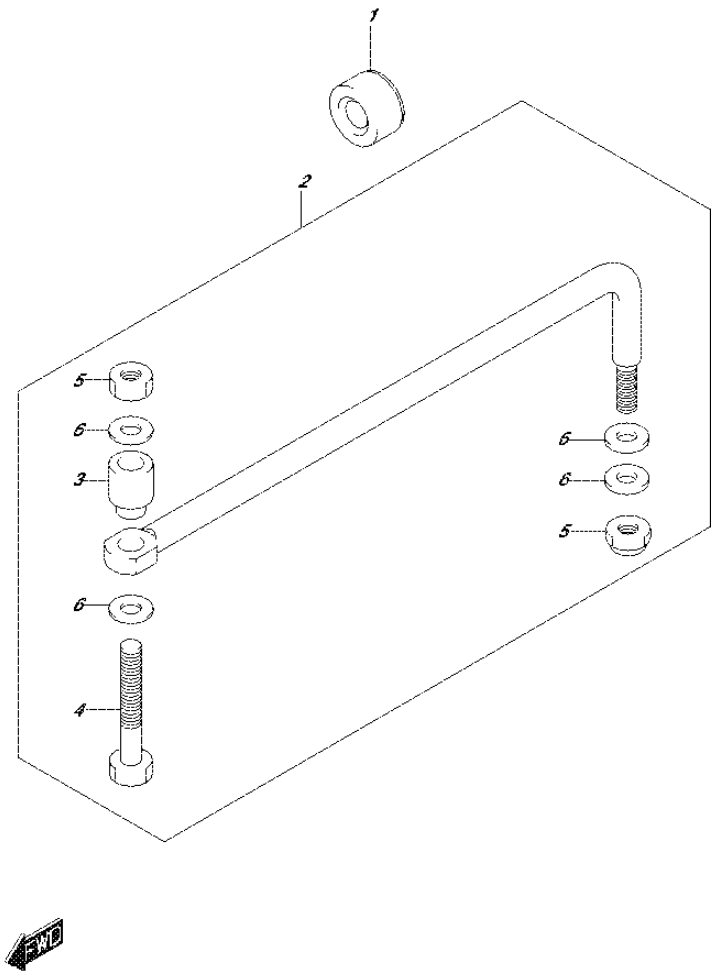

FIG.442G (4-B-12) DRAG LINK (DF60AVT E01)

REF NO.	PART NO.	DESCRIPTION	Q'TY	REMARKS
1	41161-94400	SEAL, STEERING CABLE	1	
2	67701-87J11	LINK, DRAG	1	
3	67721-87J00	.SPACER	1	
4	67725-99E00	.BOLT, DRAG LINK	1	
5	67726-99E00	.NUT	2	
6	67728-99E00	.WASHER	4	

FIG.442H

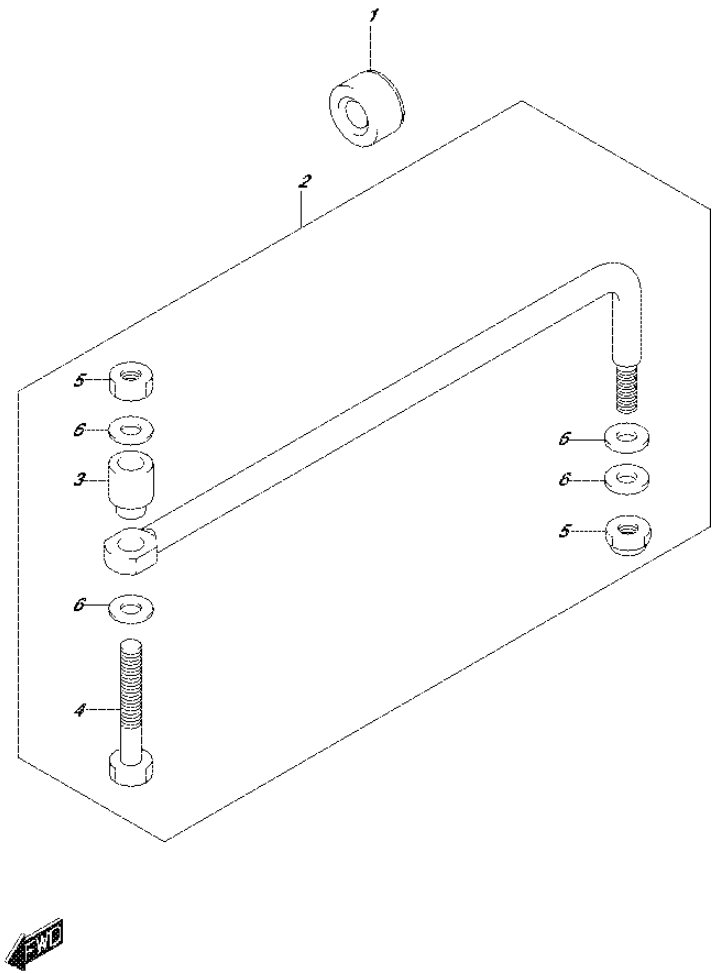

FIG.442H (4-B-13) DRAG LINK (DF60AVT E40)

REF NO.	PART NO.	DESCRIPTION	Q'TY	REMARKS
1	41161-94400	SEAL, STEERING CABLE	1	
2	67701-87J11	LINK, DRAG	1	
3	67721-87J00	.SPACER	1	
4	67725-99E00	.BOLT, DRAG LINK	1	
5	67726-99E00	.NUT	2	
6	67728-99E00	.WASHER	4	

FIG.444A

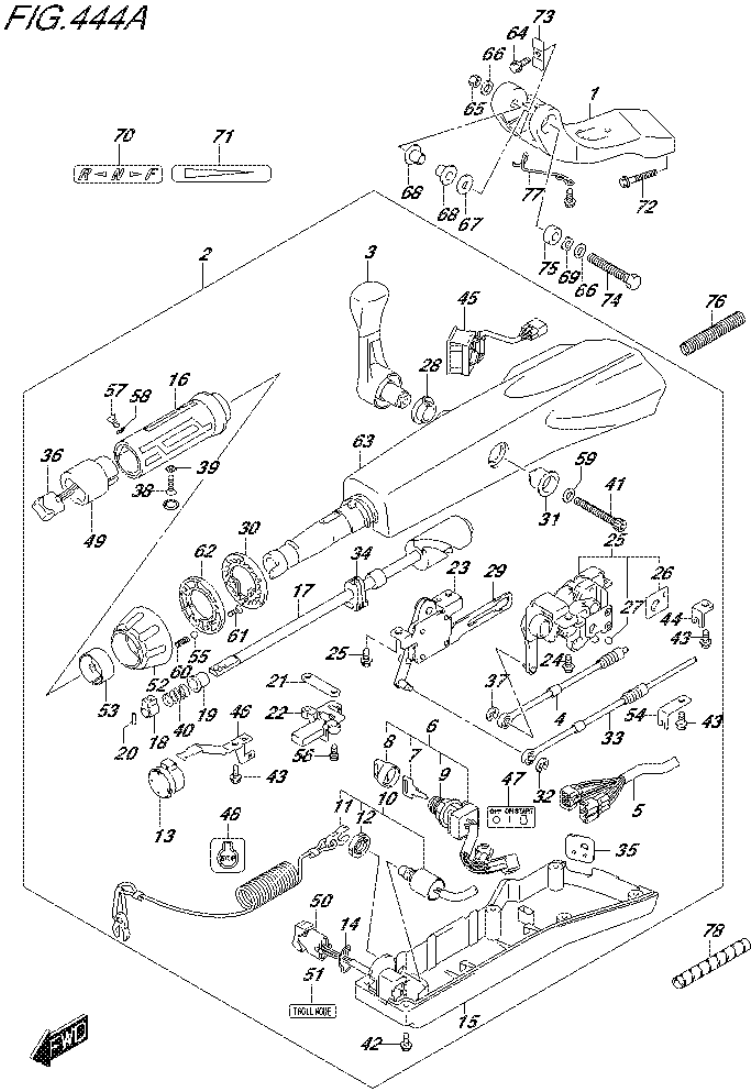

FIG.444A (4-B-14) TILLER HANDLE (DF40AQH E01)

REF NO.	PART NO.	DESCRIPTION	Q'TY	REMARKS
1	43761-88L01-0EP	BRACKET, TILLER HANDLE (BLACK)	1	
2	63110-88L31-0EP	HANDLE ASSY, TILLER (BLACK)	1	
3	21110-88L00	.LEVER, SHIFT	1	
4	23230-88L00	.CABLE, SHIFT	1	
5	36620-88L10	.WIRE ASSY, HANDLE	1	
6	37110-87L01	.SWITCH ASSY, IGNITION	1	
7-1	37141-99E00	..KEY (931)	1	
7-2	37141-99E10	..KEY (932)	1	
7-3	37141-99E20	..KEY (933)	1	
7-4	37141-99E30	..KEY (934)	1	
7-5	37141-99E40	..KEY (935)	1	
7-6	37141-99E50	..KEY (936)	1	
7-7	37141-99E60	..KEY (937)	1	
7-8	37141-99E70	..KEY (938)	1	
7-9	37141-99E80	..KEY (939)	1	
7-10	37141-99E90	..KEY (940)	1	
7-11	37141-99EA0	..KEY (941)	1	
7-12	37141-99EB0	..KEY (942)	1	
8	37143-99E00	..CAP, KEY	1	
9	37149-93J00	..CAP, CYLINDER BODY	1	
10	37820-87L01	.SWITCH ASSY, EMERGENCY	1	
11	37823-92E01	..PLATE, LOCK	1	
12	37826-92J00	..NUT	1	
13	38500-93J90	.BUZZER	1	
14	37852-87J00	.PLATE, TRIM SWITCH	1	
15	63121-88L00	.COVER, UNDER	1	
16	63210-88L00	.GRIP, HANDLE	1	
17	63221-88L00	.SHAFT, THROTTLE	1	
18	63223-92D00	.STOPPER, HANDLE ROD	1	
19	63225-88L00	.BUSH, HANDLE ROD	1	
20	63227-93200	.PIN, HANDLE ROD	1	
21	63235-88L00	.PLATE, THROTTLE SHAFT	1	
22	63246-88L00	.STOPPER THROTTLE ADJ	1	
23	63250-88L00	.ARM ASSY, THROTTLE	1	

FIG.444A

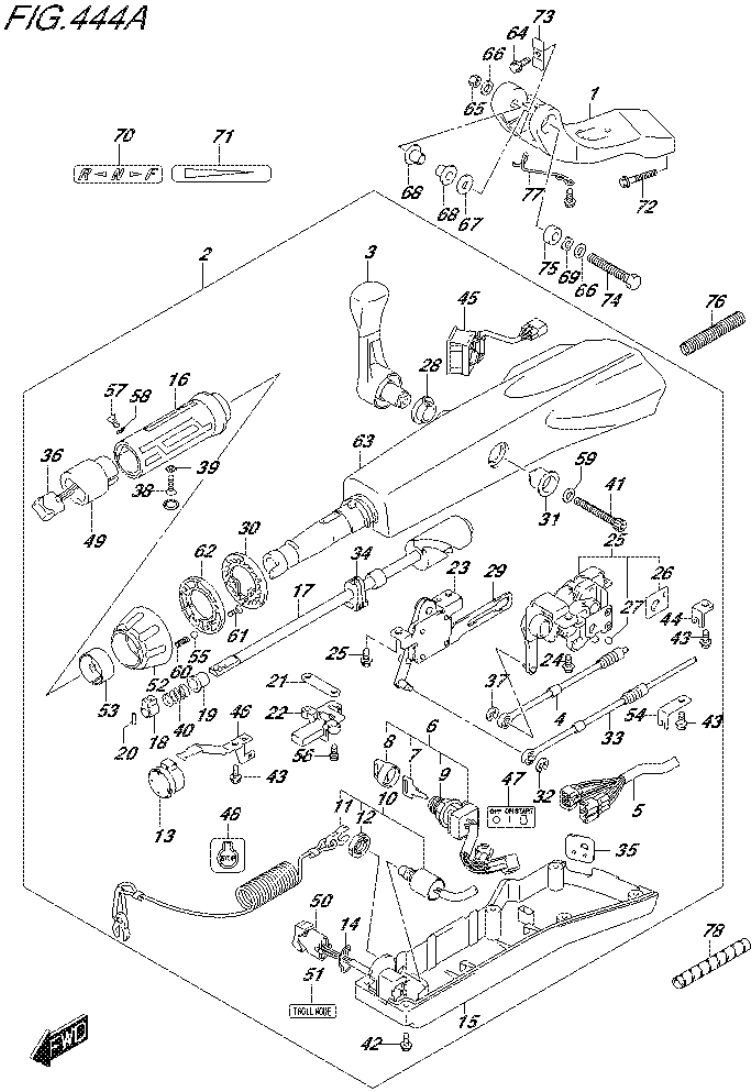

FIG.444A (4-B-15) TILLER HANDLE (DF40AQH E01)

REF NO.	PART NO.	DESCRIPTION	Q'TY	REMARKS
24	63251-87J00	.BOLT, SHIFT GEAR ASSY	4	
25	63260-88L00	.GEAR ASSY, SHIFT	1	
26	63272-87J00	..PLATE, BALL GUIDE	1	
27	63273-87J00	..BALL	1	
28	63262-87J00	.BUSH, SHIFT LEVER	1	
29	63271-87J00	.PLATE, LOCK	1	
30	63248-99J00	.PLATE, THROTTLE ADJ NOTCH	1	
31	63261-87J00	.BUSH, SHIFT GEAR	1	
32	63274-87J00	.E RING	1	
33	63610-88L00	.CABLE, THROTTLE	1	
34	37853-88L90	.GROMMET, PTT SWITCH LEAD	1	
35	63626-88L00	.GROMMET, CABLE	1	
36	67263-88L00	.CAP, SWITCH	1	
37	67292-87J00	.E RING	2	
38	09126-06015	.SCREW (6X23)	1	
39	09163-06001	.LOCK WASHER	1	
40	09440-12027	.SPRING	1	
41	21112-88L00	.BOLT SHIFT LEVER	1	
42	09125-05047	.SCREW (5X14)	6	
43	63611-88L00	.BOLT CLAMP BRACKET	3	
44	63612-87J00	.BRACKET, CLAMP	1	
45	34200-87L00	.TACHOMETER ASSY, WITH MONITOR	1	
46	36617-88L90	.CLAMP PLATE, MAIN HARNESS	1	
47	37112-88L90	.LABEL, IGNITION SWITCH	1	
48	37835-95D00	.LABEL, STOP	1	
49	37851-88L90	.BASE, PTT SWITCH	1	
50	37861-87L10	.SWITCH, TROLLING CONTROL	1	
51	37864-88L90	.LABEL, TROLL MODE	1	
52	63244-99J00	.KNOB, THROTTLE ADJ	1	
53	63245-99J00	.BUSH, THROTTLE ADJ	1	
54	63612-88L10	.BRACKET, CLAMP SHIFT	1	
55	09260-10006	.BALL	1	
56	63251-88L90	.BOLT	2	
57	37855-88L90	.SCREW, THROTTLE GRIP	1	

FIG.444A

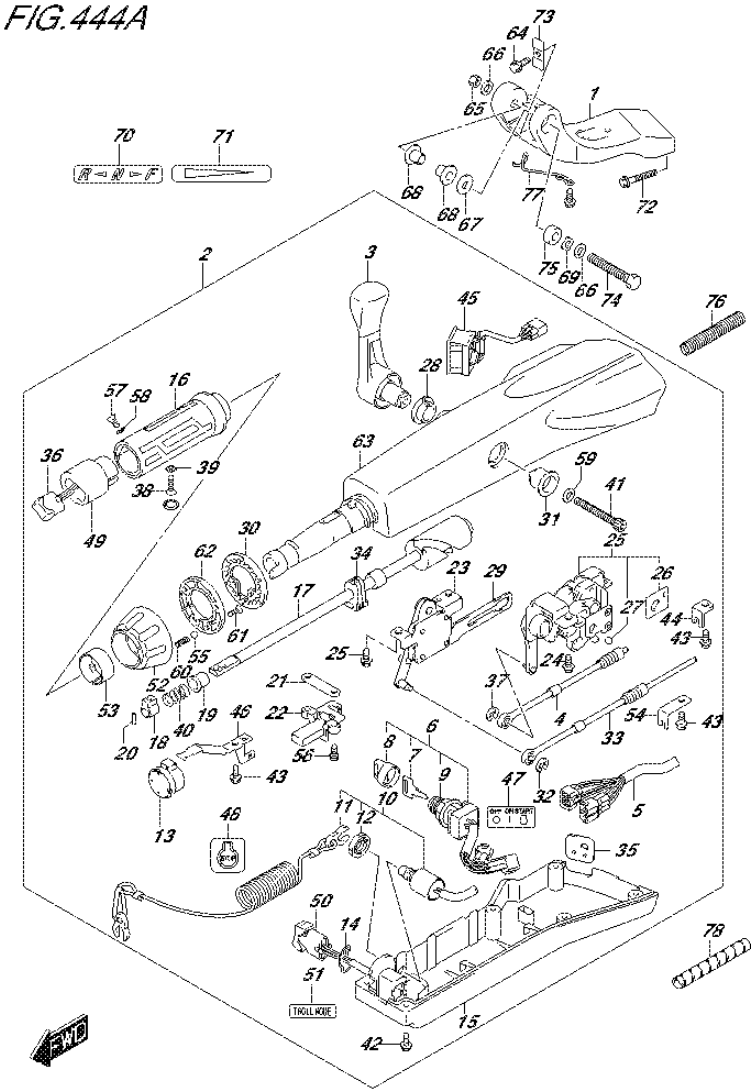

FIG.444A (4-C-2) TILLER HANDLE (DF40AQH E01)

REF NO.	PART NO.	DESCRIPTION	Q'TY	REMARKS
58	37854-88L90	.WASHER, THROTTLE GRIP	1	
59	63258-88L00	.WASHER	1	
60	09440-06037	.SPRING	1	
61	03522-05169	.SCREW	3	
62	63247-99J00	.PLATE, THROTTLE ADJ KNOB	1	
63	63111-88L00-0EP	.HOUSING, TILLER HANDLE (BLACK)	1	
64	09116-08137	BOLT (8X22)	1	
65	09159-12014	NUT	1	
66	09160-12066	WASHER (12.5X22X2.5)	2	
67	09160-12124	WASHER (12.5X32X1.5)	1	
68	63115-88L00	BUSH, TILLER HANDLE PIVOT	2	
69	09164-13010	WASHER	1	
70	21131-88L00	MARK, CLUTCH SHIFT	1	
71	63215-93110	MARK, HANDLE GRIP	1	
72	09116-10150	BOLT (10X55)	2	
73	63132-88L00	STOPPER, TILLER HANDLE	1	
74	43762-88L00	BOLT, TILLER HANDLE PIVOT	1	
75	43768-88L00	SPACER, TILLER HANDLE	1	
76	33834-88L00	TUBE, CABLE PROTECTOR	1	
77	65793-88L00	HOLDER, FUEL HOSE	1	
78	33833-91J00	TUBE, THROTTLE CABLE (L:250)	1	L:250->150

FIG.444B

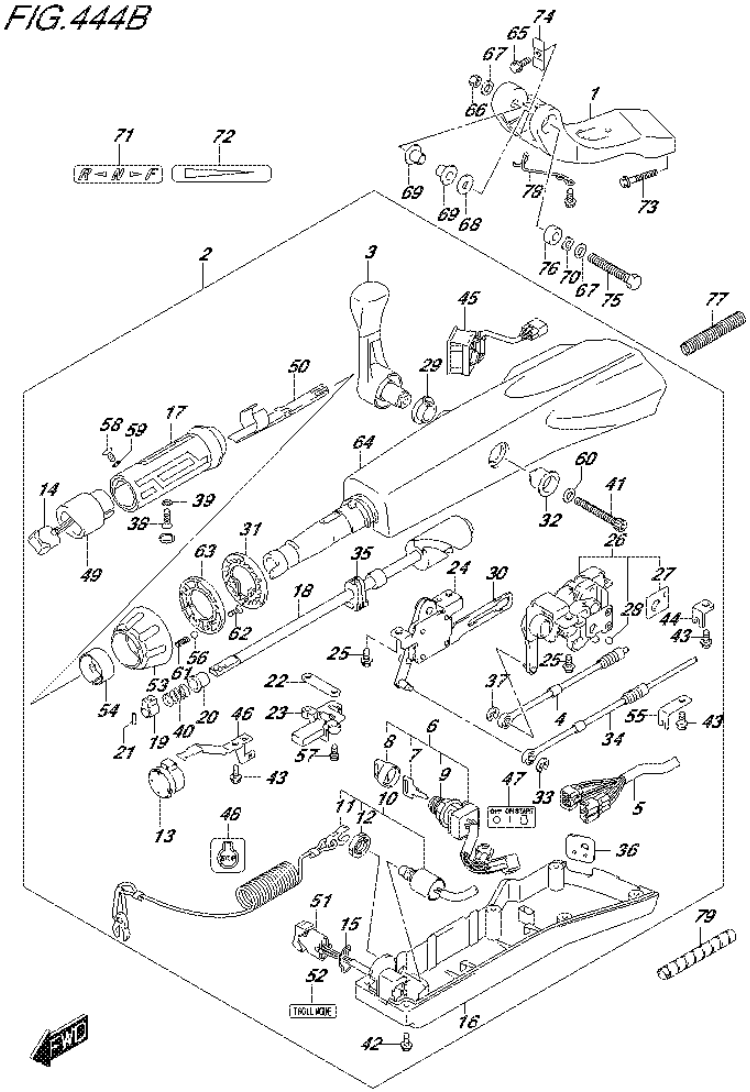

FIG.444B (4-C-3) TILLER HANDLE (DF40ATH E01)

REF NO.	PART NO.	DESCRIPTION	Q'TY	REMARKS
1	43761-88L01-0EP	BRACKET, TILLER HANDLE (BLACK)	1	
2	63110-88L21-0EP	HANDLE ASSY, TILLER (BLACK)	1	
3	21110-88L00	.LEVER, SHIFT	1	
4	23230-88L00	.CABLE, SHIFT	1	
5	36620-88L10	.WIRE ASSY, HANDLE	1	
6	37110-87L01	.SWITCH ASSY, IGNITION	1	
7-1	37141-99E00	..KEY (931)	1	
7-2	37141-99E10	..KEY (932)	1	
7-3	37141-99E20	..KEY (933)	1	
7-4	37141-99E30	..KEY (934)	1	
7-5	37141-99E40	..KEY (935)	1	
7-6	37141-99E50	..KEY (936)	1	
7-7	37141-99E60	..KEY (937)	1	
7-8	37141-99E70	..KEY (938)	1	
7-9	37141-99E80	..KEY (939)	1	
7-10	37141-99E90	..KEY (940)	1	
7-11	37141-99EA0	..KEY (941)	1	
7-12	37141-99EB0	..KEY (942)	1	
8	37143-99E00	..CAP, KEY	1	
9	37149-93J00	..CAP, CYLINDER BODY	1	
10	37820-87L01	.SWITCH ASSY, EMERGENCY	1	
11	37823-92E01	..PLATE, LOCK	1	
12	37826-92J00	..NUT	1	
13	38500-93J90	.BUZZER	1	
14	37850-87L00	.SWITCH ASSY, PTT	1	
15	37852-87J00	.PLATE, TRIM SWITCH	1	
16	63121-88L00	.COVER, UNDER	1	
17	63210-88L00	.GRIP, HANDLE	1	
18	63221-88L00	.SHAFT, THROTTLE	1	
19	63223-92D00	.STOPPER, HANDLE ROD	1	
20	63225-88L00	.BUSH, HANDLE ROD	1	
21	63227-93200	.PIN, HANDLE ROD	1	
22	63235-88L00	.PLATE, THROTTLE SHAFT	1	
23	63246-88L00	.STOPPER THROTTLE ADJ	1	

FIG.444B

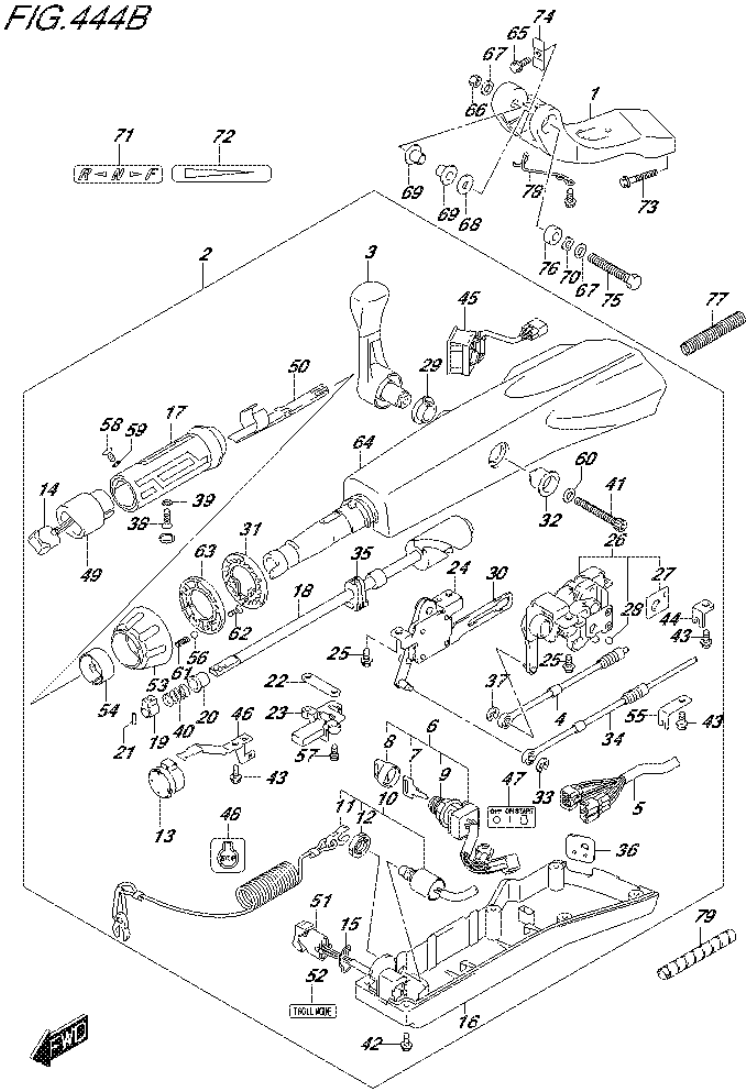

FIG.444B (4-C-4) TILLER HANDLE (DF40ATH E01)

REF NO.	PART NO.	DESCRIPTION	Q'TY	REMARKS
24	63250-88L00	.ARM ASSY, THROTTLE	1	
25	63251-87J00	.BOLT, SHIFT GEAR ASSY	4	
26	63260-88L00	.GEAR ASSY, SHIFT	1	
27	63272-87J00	..PLATE, BALL GUIDE	1	
28	63273-87J00	..BALL	1	
29	63262-87J00	.BUSH, SHIFT LEVER	1	
30	63271-87J00	.PLATE, LOCK	1	
31	63248-99J00	.PLATE, THROTTLE ADJ NOTCH	1	
32	63261-87J00	.BUSH, SHIFT GEAR	1	
33	63274-87J00	.E RING	1	
34	63610-88L00	.CABLE, THROTTLE	1	
35	37853-88L90	.GROMMET, PTT SWITCH LEAD	1	
36	63626-88L00	.GROMMET, CABLE	1	
37	67292-87J00	.E RING	2	
38	09126-06015	.SCREW (6X23)	1	
39	09163-06001	.LOCK WASHER	1	
40	09440-12027	.SPRING	1	
41	21112-88L00	.BOLT SHIFT LEVER	1	
42	09125-05047	.SCREW (5X14)	6	
43	63611-88L00	.BOLT CLAMP BRACKET	3	
44	63612-87J00	.BRACKET, CLAMP	1	
45	34200-87L00	.TACHOMETER ASSY, WITH MONITOR	1	
46	36617-88L90	.CLAMP PLATE, MAIN HARNESS	1	
47	37112-88L90	.LABEL, IGNITION SWITCH	1	
48	37835-95D00	.LABEL, STOP	1	
49	37851-88L90	.BASE, PTT SWITCH	1	
50	37852-88L90	.HARNESS, GUIDE	1	
51	37861-87L10	.SWITCH, TROLLING CONTROL	1	
52	37864-88L90	.LABEL, TROLL MODE	1	
53	63244-99J00	.KNOB, THROTTLE ADJ	1	
54	63245-99J00	.BUSH, THROTTLE ADJ	1	
55	63612-88L10	.BRACKET, CLAMP SHIFT	1	
56	09260-10006	.BALL	1	
57	63251-88L90	.BOLT	2	

FIG.444B

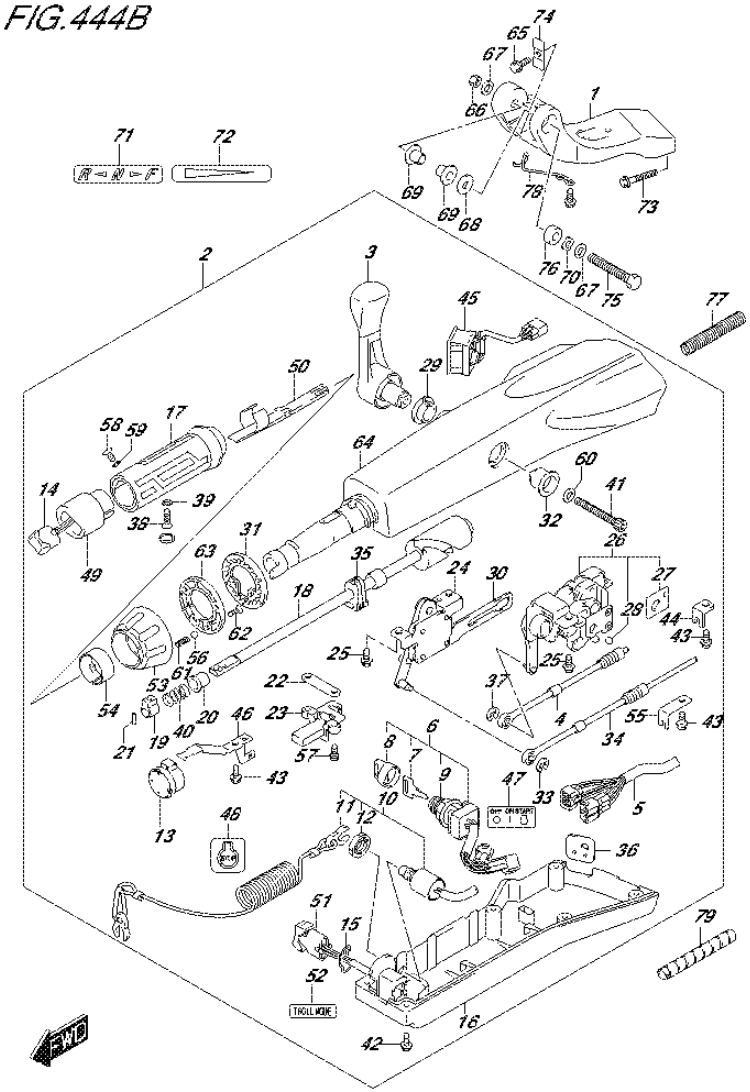

FIG.444B (4-C-5) TILLER HANDLE (DF40ATH E01)

REF NO.	PART NO.	DESCRIPTION	Q'TY	REMARKS
58	37855-88L90	.SCREW, THROTTLE GRIP	1	
59	37854-88L90	.WASHER, THROTTLE GRIP	1	
60	63258-88L00	.WASHER	1	
61	09440-06037	.SPRING	1	
62	03522-05169	.SCREW	3	
63	63247-99J00	.PLATE,THROTTLE ADJ KNOB	1	
64	63111-88L00-0EP	.HOUSING, TILLER HANDLE (BLACK)	1	
65	09116-08137	BOLT (8X22)	1	
66	09159-12014	NUT	1	
67	09160-12066	WASHER (12.5X22X2.5)	2	
68	09160-12124	WASHER (12.5X32X1.5)	1	
69	63115-88L00	BUSH, TILLER HANDLE PIVOT	2	
70	09164-13010	WASHER	1	
71	21131-88L00	MARK, CLUTCH SHIFT	1	
72	63215-93110	MARK, HANDLE GRIP	1	
73	09116-10150	BOLT (10X55)	2	
74	63132-88L00	STOPPER, TILLER HANDLE	1	
75	43762-88L00	BOLT, TILLER HANDLE PIVOT	1	
76	43768-88L00	SPACER, TILLER HANDLE	1	
77	33834-88L00	TUBE, CABLE PROTECTOR	1	
78	65793-88L00	HOLDER, FUEL HOSE	1	
79	33833-91J00	TUBE, THROTTLE CABLE (L:250)	1	L:250->150

FIG.444C

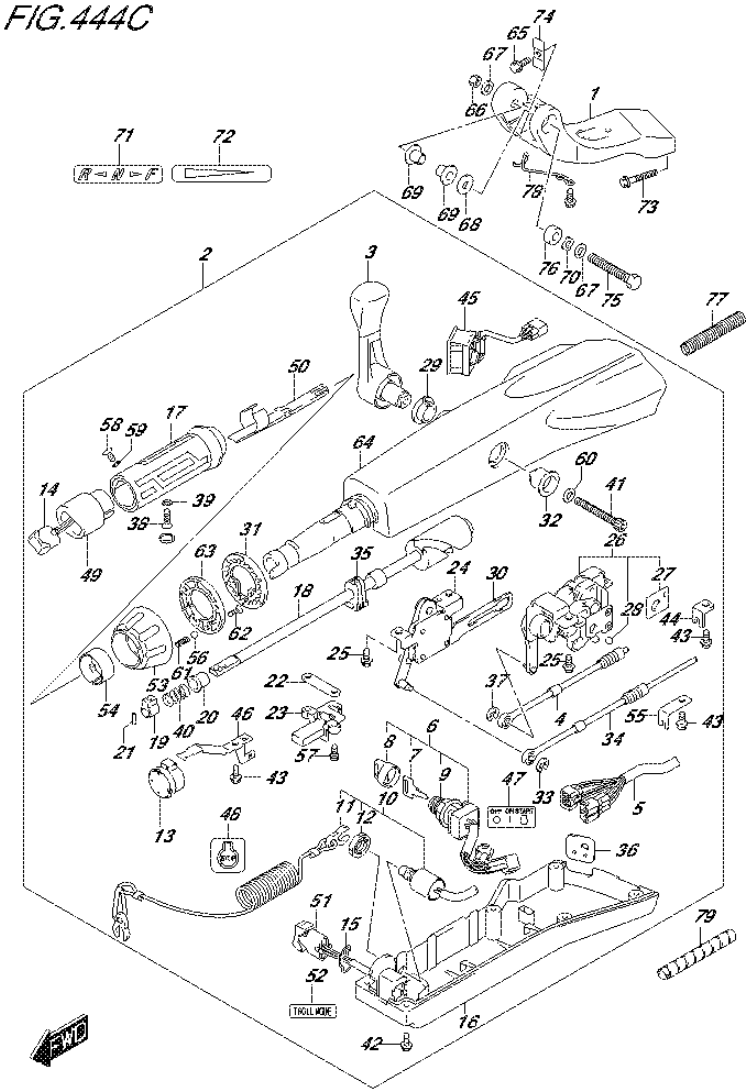

FIG.444C (4-C-6) TILLER HANDLE (DF50ATH E01)

REF NO.	PART NO.	DESCRIPTION	Q'TY	REMARKS
1	43761-88L01-0EP	BRACKET, TILLER HANDLE (BLACK)	1	
2	63110-88L21-0EP	HANDLE ASSY, TILLER (BLACK)	1	
3	21110-88L00	.LEVER, SHIFT	1	
4	23230-88L00	.CABLE, SHIFT	1	
5	36620-88L10	.WIRE ASSY, HANDLE	1	
6	37110-87L01	.SWITCH ASSY, IGNITION	1	
7-1	37141-99E00	..KEY (931)	1	
7-2	37141-99E10	..KEY (932)	1	
7-3	37141-99E20	..KEY (933)	1	
7-4	37141-99E30	..KEY (934)	1	
7-5	37141-99E40	..KEY (935)	1	
7-6	37141-99E50	..KEY (936)	1	
7-7	37141-99E60	..KEY (937)	1	
7-8	37141-99E70	..KEY (938)	1	
7-9	37141-99E80	..KEY (939)	1	
7-10	37141-99E90	..KEY (940)	1	
7-11	37141-99EA0	..KEY (941)	1	
7-12	37141-99EB0	..KEY (942)	1	
8	37143-99E00	..CAP, KEY	1	
9	37149-93J00	..CAP, CYLINDER BODY	1	
10	37820-87L01	.SWITCH ASSY, EMERGENCY	1	
11	37823-92E01	..PLATE, LOCK	1	
12	37826-92J00	..NUT	1	
13	38500-93J90	.BUZZER	1	
14	37850-87L00	.SWITCH ASSY, PTT	1	
15	37852-87J00	.PLATE, TRIM SWITCH	1	
16	63121-88L00	.COVER, UNDER	1	
17	63210-88L00	.GRIP, HANDLE	1	
18	63221-88L00	.SHAFT, THROTTLE	1	
19	63223-92D00	.STOPPER, HANDLE ROD	1	
20	63225-88L00	.BUSH, HANDLE ROD	1	
21	63227-93200	.PIN, HANDLE ROD	1	
22	63235-88L00	.PLATE, THROTTLE SHAFT	1	
23	63246-88L00	.STOPPER THROTTLE ADJ	1	

FIG.444C

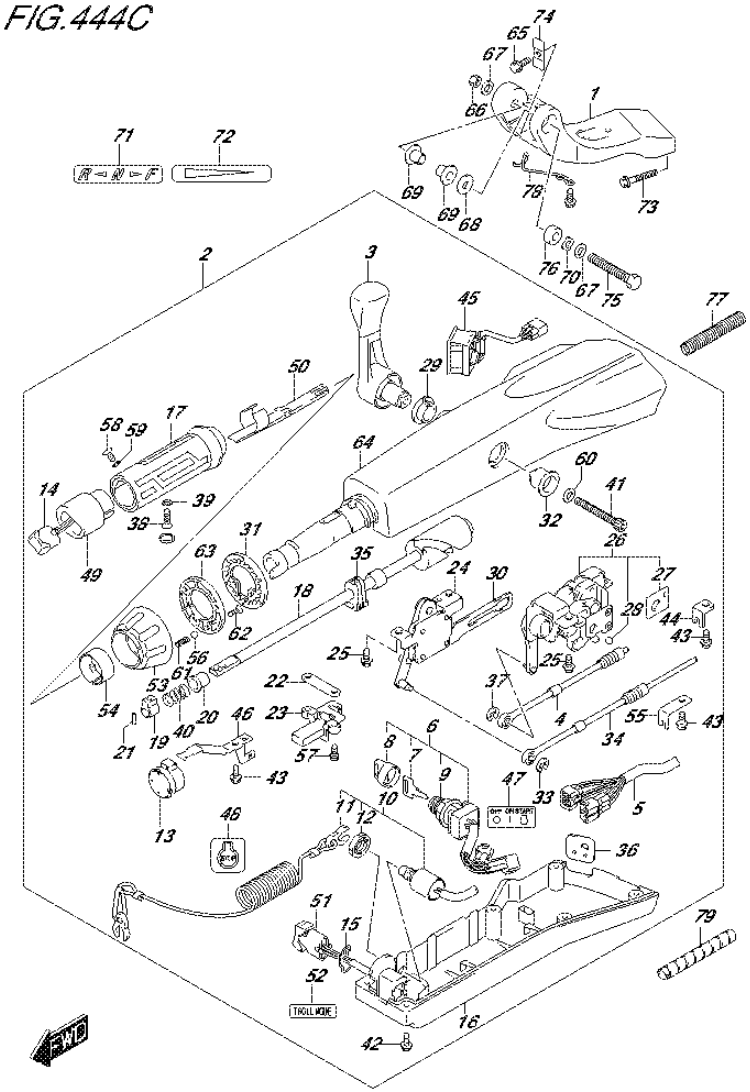

FIG.444C (4-C-7) TILLER HANDLE (DF50ATH E01)

REF NO.	PART NO.	DESCRIPTION	Q'TY	REMARKS
24	63250-88L00	.ARM ASSY, THROTTLE	1	
25	63251-87J00	.BOLT, SHIFT GEAR ASSY	4	
26	63260-88L00	.GEAR ASSY, SHIFT	1	
27	63272-87J00	..PLATE, BALL GUIDE	1	
28	63273-87J00	..BALL	1	
29	63262-87J00	.BUSH, SHIFT LEVER	1	
30	63271-87J00	.PLATE, LOCK	1	
31	63248-99J00	.PLATE, THROTTLE ADJ NOTCH	1	
32	63261-87J00	.BUSH, SHIFT GEAR	1	
33	63274-87J00	.E RING	1	
34	63610-88L00	.CABLE, THROTTLE	1	
35	37853-88L90	.GROMMET, PTT SWITCH LEAD	1	
36	63626-88L00	.GROMMET, CABLE	1	
37	67292-87J00	.E RING	2	
38	09126-06015	.SCREW (6X23)	1	
39	09163-06001	.LOCK WASHER	1	
40	09440-12027	.SPRING	1	
41	21112-88L00	.BOLT SHIFT LEVER	1	
42	09125-05047	.SCREW (5X14)	6	
43	63611-88L00	.BOLT CLAMP BRACKET	3	
44	63612-87J00	.BRACKET, CLAMP	1	
45	34200-87L00	.TACHOMETER ASSY, WITH MONITOR	1	
46	36617-88L90	.CLAMP PLATE, MAIN HARNESS	1	
47	37112-88L90	.LABEL, IGNITION SWITCH	1	
48	37835-95D00	.LABEL, STOP	1	
49	37851-88L90	.BASE, PTT SWITCH	1	
50	37852-88L90	.HARNESS, GUIDE	1	
51	37861-87L10	.SWITCH, TROLLING CONTROL	1	
52	37864-88L90	.LABEL, TROLL MODE	1	
53	63244-99J00	.KNOB, THROTTLE ADJ	1	
54	63245-99J00	.BUSH, THROTTLE ADJ	1	
55	63612-88L10	.BRACKET, CLAMP SHIFT	1	
56	09260-10006	.BALL	1	
57	63251-88L90	.BOLT	2	

FIG.444C

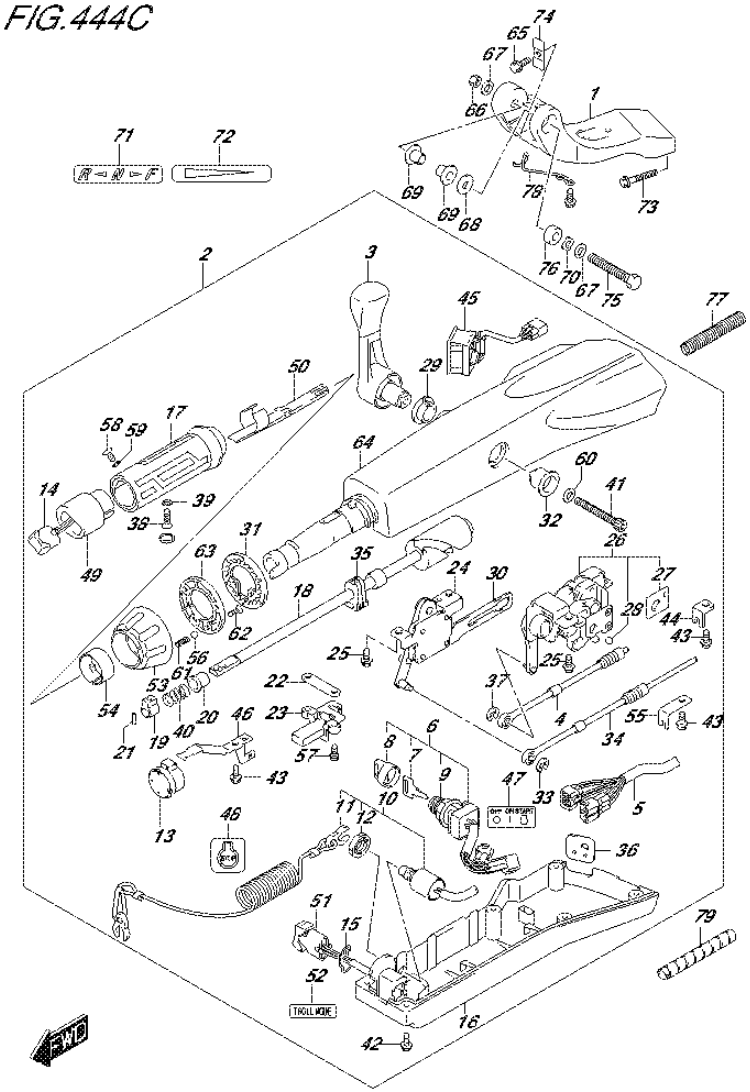

FIG.444C (4-C-8) TILLER HANDLE (DF50ATH E01)

REF NO.	PART NO.	DESCRIPTION	Q'TY	REMARKS
58	37855-88L90	.SCREW, THROTTLE GRIP	1	
59	37854-88L90	.WASHER, THROTTLE GRIP	1	
60	63258-88L00	.WASHER	1	
61	09440-06037	.SPRING	1	
62	03522-05169	.SCREW	3	
63	63247-99J00	.PLATE,THROTTLE ADJ KNOB	1	
64	63111-88L00-0EP	.HOUSING, TILLER HANDLE (BLACK)	1	
65	09116-08137	BOLT (8X22)	1	
66	09159-12014	NUT	1	
67	09160-12066	WASHER (12.5X22X2.5)	2	
68	09160-12124	WASHER (12.5X32X1.5)	1	
69	63115-88L00	BUSH, TILLER HANDLE PIVOT	2	
70	09164-13010	WASHER	1	
71	21131-88L00	MARK, CLUTCH SHIFT	1	
72	63215-93110	MARK, HANDLE GRIP	1	
73	09116-10150	BOLT (10X55)	2	
74	63132-88L00	STOPPER, TILLER HANDLE	1	
75	43762-88L00	BOLT, TILLER HANDLE PIVOT	1	
76	43768-88L00	SPACER, TILLER HANDLE	1	
77	33834-88L00	TUBE, CABLE PROTECTOR	1	
78	65793-88L00	HOLDER, FUEL HOSE	1	
79	33833-91J00	TUBE, THROTTLE CABLE (L:250)	1	L:250->150

FIG.444D

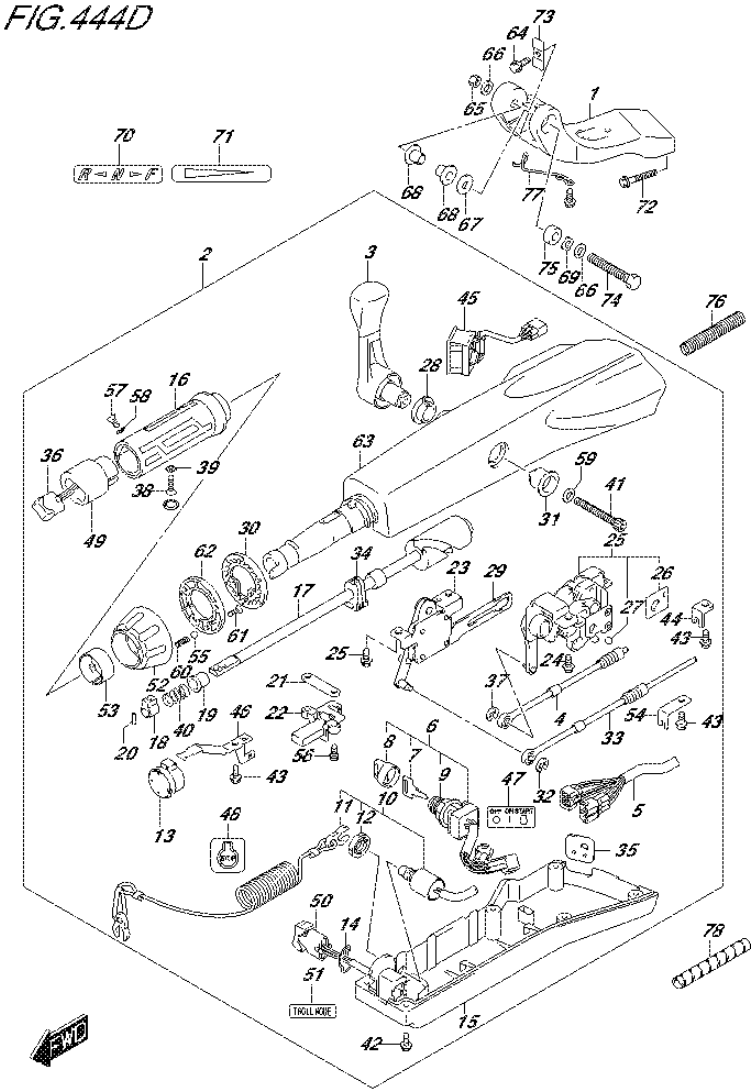

FIG.444D (4-C-9) TILLER HANDLE (DF60AQH E01)

REF NO.	PART NO.	DESCRIPTION	Q'TY	REMARKS
1	43761-88L01-0EP	BRACKET, TILLER HANDLE (BLACK)	1	
2	63110-88L31-0EP	HANDLE ASSY, TILLER (BLACK)	1	
3	21110-88L00	.LEVER, SHIFT	1	
4	23230-88L00	.CABLE, SHIFT	1	
5	36620-88L10	.WIRE ASSY, HANDLE	1	
6	37110-87L01	.SWITCH ASSY, IGNITION	1	
7-1	37141-99E00	..KEY (931)	1	
7-2	37141-99E10	..KEY (932)	1	
7-3	37141-99E20	..KEY (933)	1	
7-4	37141-99E30	..KEY (934)	1	
7-5	37141-99E40	..KEY (935)	1	
7-6	37141-99E50	..KEY (936)	1	
7-7	37141-99E60	..KEY (937)	1	
7-8	37141-99E70	..KEY (938)	1	
7-9	37141-99E80	..KEY (939)	1	
7-10	37141-99E90	..KEY (940)	1	
7-11	37141-99EA0	..KEY (941)	1	
7-12	37141-99EB0	..KEY (942)	1	
8	37143-99E00	..CAP, KEY	1	
9	37149-93J00	..CAP, CYLINDER BODY	1	
10	37820-87L01	.SWITCH ASSY, EMERGENCY	1	
11	37823-92E01	..PLATE, LOCK	1	
12	37826-92J00	..NUT	1	
13	38500-93J90	.BUZZER	1	
14	37852-87J00	.PLATE, TRIM SWITCH	1	
15	63121-88L00	.COVER, UNDER	1	
16	63210-88L00	.GRIP, HANDLE	1	
17	63221-88L00	.SHAFT, THROTTLE	1	
18	63223-92D00	.STOPPER, HANDLE ROD	1	
19	63225-88L00	.BUSH, HANDLE ROD	1	
20	63227-93200	.PIN, HANDLE ROD	1	
21	63235-88L00	.PLATE, THROTTLE SHAFT	1	
22	63246-88L00	.STOPPER THROTTLE ADJ	1	
23	63250-88L00	.ARM ASSY, THROTTLE	1	

FIG.444D

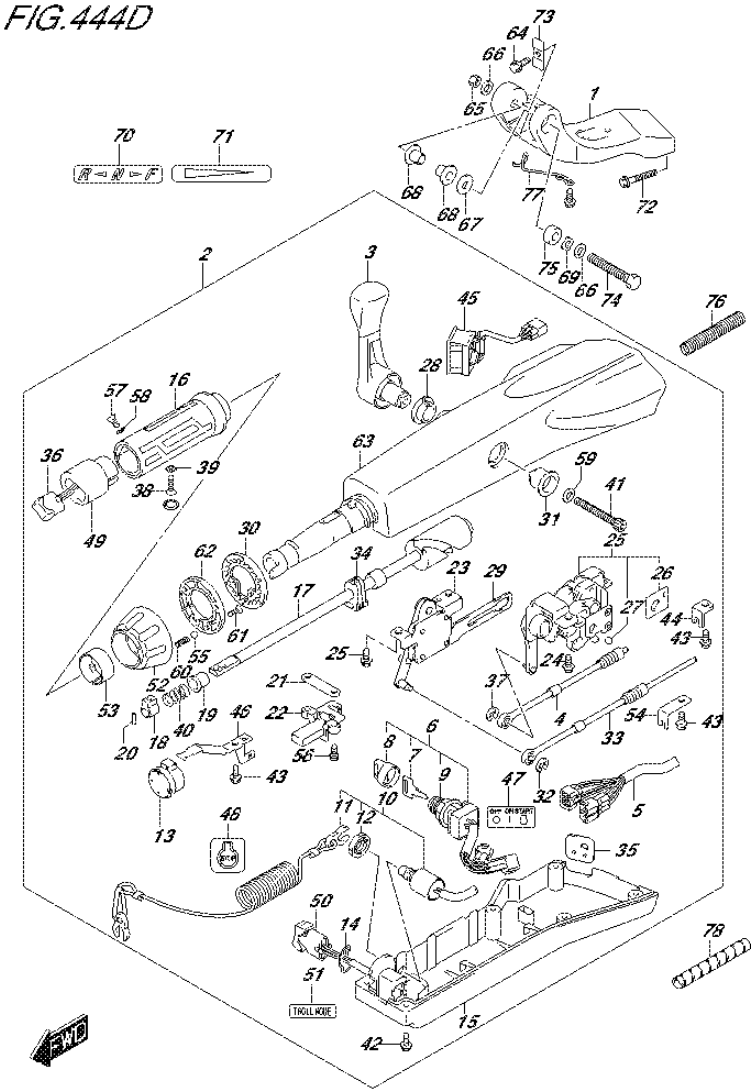

FIG.444D (4-C-10) TILLER HANDLE (DF60AQH E01)

REF NO.	PART NO.	DESCRIPTION	Q'TY	REMARKS
24	63251-87J00	.BOLT, SHIFT GEAR ASSY	4	
25	63260-88L00	.GEAR ASSY, SHIFT	1	
26	63272-87J00	..PLATE, BALL GUIDE	1	
27	63273-87J00	..BALL	1	
28	63262-87J00	.BUSH, SHIFT LEVER	1	
29	63271-87J00	.PLATE, LOCK	1	
30	63248-99J00	.PLATE, THROTTLE ADJ NOTCH	1	
31	63261-87J00	.BUSH, SHIFT GEAR	1	
32	63274-87J00	.E RING	1	
33	63610-88L00	.CABLE, THROTTLE	1	
34	37853-88L90	.GROMMET, PTT SWITCH LEAD	1	
35	63626-88L00	.GROMMET, CABLE	1	
36	67263-88L00	.CAP, SWITCH	1	
37	67292-87J00	.E RING	2	
38	09126-06015	.SCREW (6X23)	1	
39	09163-06001	.LOCK WASHER	1	
40	09440-12027	.SPRING	1	
41	21112-88L00	.BOLT SHIFT LEVER	1	
42	09125-05047	.SCREW (5X14)	6	
43	63611-88L00	.BOLT CLAMP BRACKET	3	
44	63612-87J00	.BRACKET, CLAMP	1	
45	34200-87L00	.TACHOMETER ASSY, WITH MONITOR	1	
46	36617-88L90	.CLAMP PLATE, MAIN HARNESS	1	
47	37112-88L90	.LABEL, IGNITION SWITCH	1	
48	37835-95D00	.LABEL, STOP	1	
49	37851-88L90	.BASE, PTT SWITCH	1	
50	37861-87L10	.SWITCH, TROLLING CONTROL	1	
51	37864-88L90	.LABEL, TROLL MODE	1	
52	63244-99J00	.KNOB, THROTTLE ADJ	1	
53	63245-99J00	.BUSH, THROTTLE ADJ	1	
54	63612-88L10	.BRACKET, CLAMP SHIFT	1	
55	09260-10006	.BALL	1	
56	63251-88L90	.BOLT	2	
57	37855-88L90	.SCREW, THROTTLE GRIP	1	

FIG.444D

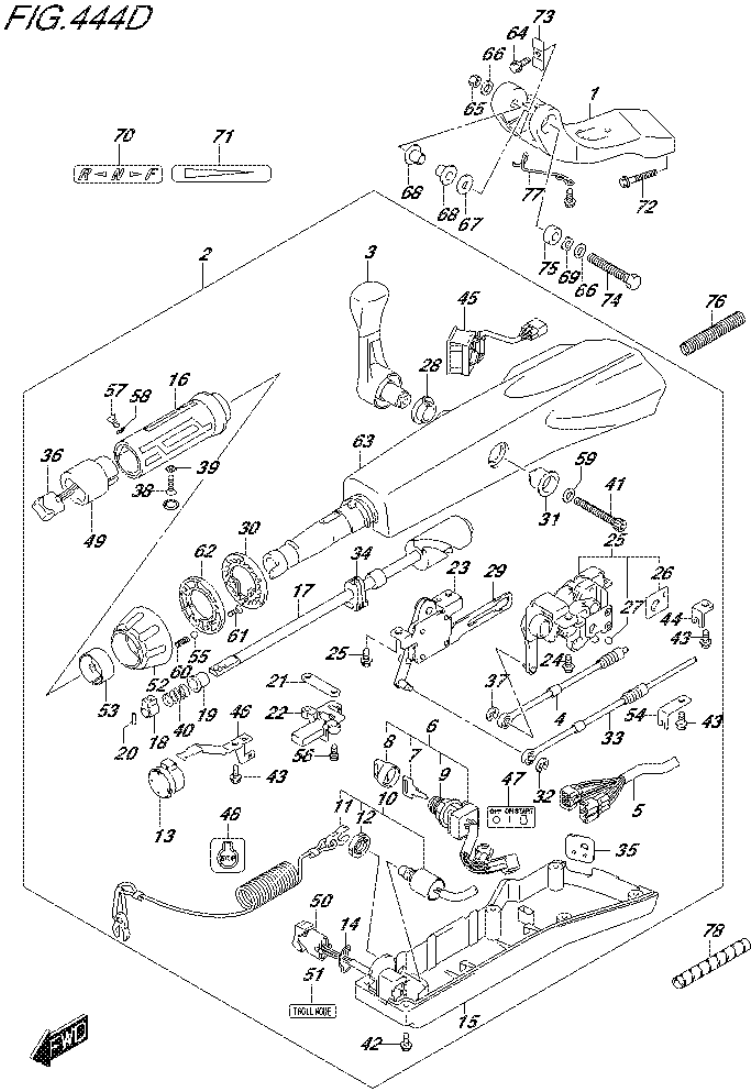

FIG.444D (4-C-11) TILLER HANDLE (DF60AQH E01)

REF NO.	PART NO.	DESCRIPTION	Q'TY	REMARKS
58	37854-88L90	.WASHER, THROTTLE GRIP	1	
59	63258-88L00	.WASHER	1	
60	09440-06037	.SPRING	1	
61	03522-05169	.SCREW	3	
62	63247-99J00	.PLATE, THROTTLE ADJ KNOB	1	
63	63111-88L00-0EP	.HOUSING, TILLER HANDLE (BLACK)	1	
64	09116-08137	BOLT (8X22)	1	
65	09159-12014	NUT	1	
66	09160-12066	WASHER (12.5X22X2.5)	2	
67	09160-12124	WASHER (12.5X32X1.5)	1	
68	63115-88L00	BUSH, TILLER HANDLE PIVOT	2	
69	09164-13010	WASHER	1	
70	21131-88L00	MARK, CLUTCH SHIFT	1	
71	63215-93110	MARK, HANDLE GRIP	1	
72	09116-10150	BOLT (10X55)	2	
73	63132-88L00	STOPPER, TILLER HANDLE	1	
74	43762-88L00	BOLT, TILLER HANDLE PIVOT	1	
75	43768-88L00	SPACER, TILLER HANDLE	1	
76	33834-88L00	TUBE, CABLE PROTECTOR	1	
77	65793-88L00	HOLDER, FUEL HOSE	1	
78	33833-91J00	TUBE, THROTTLE CABLE (L:250)	1	L:250->150

FIG.444E

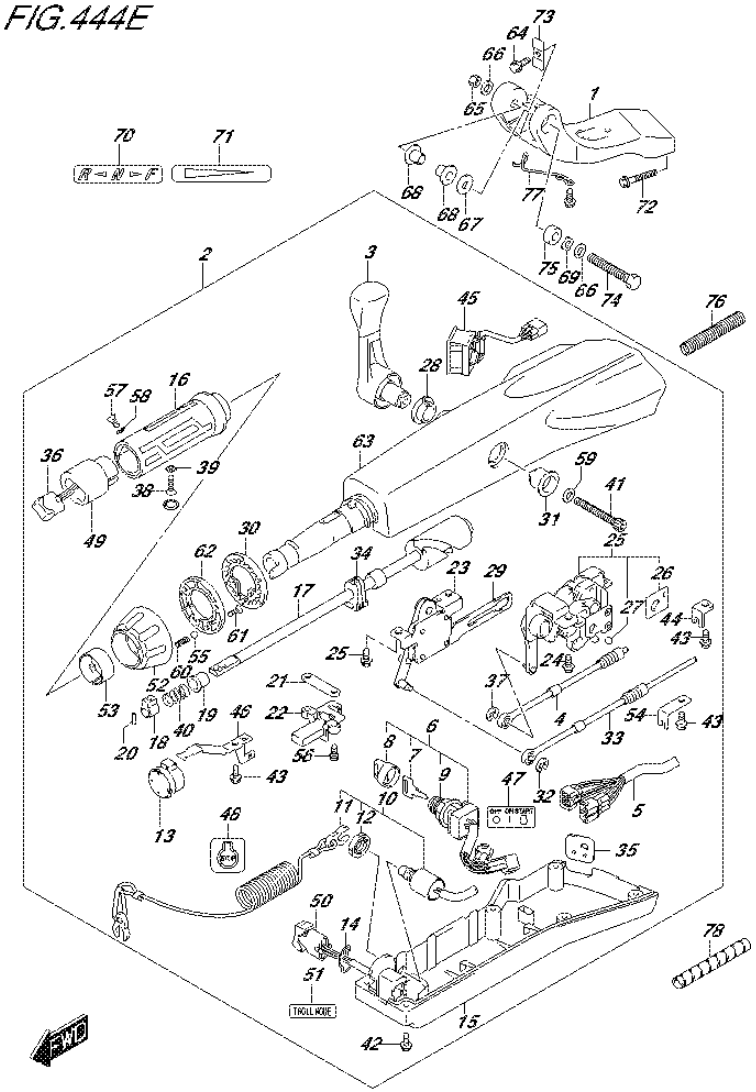

FIG.444E (4-C-12) TILLER HANDLE (DF60AQH E40)

REF NO.	PART NO.	DESCRIPTION	Q'TY	REMARKS
1	43761-88L01-0EP	BRACKET, TILLER HANDLE (BLACK)	1	
2	63110-88L31-0EP	HANDLE ASSY, TILLER (BLACK)	1	
3	21110-88L00	.LEVER, SHIFT	1	
4	23230-88L00	.CABLE, SHIFT	1	
5	36620-88L10	.WIRE ASSY, HANDLE	1	
6	37110-87L01	.SWITCH ASSY, IGNITION	1	
7-1	37141-99E00	..KEY (931)	1	
7-2	37141-99E10	..KEY (932)	1	
7-3	37141-99E20	..KEY (933)	1	
7-4	37141-99E30	..KEY (934)	1	
7-5	37141-99E40	..KEY (935)	1	
7-6	37141-99E50	..KEY (936)	1	
7-7	37141-99E60	..KEY (937)	1	
7-8	37141-99E70	..KEY (938)	1	
7-9	37141-99E80	..KEY (939)	1	
7-10	37141-99E90	..KEY (940)	1	
7-11	37141-99EA0	..KEY (941)	1	
7-12	37141-99EB0	..KEY (942)	1	
8	37143-99E00	..CAP, KEY	1	
9	37149-93J00	..CAP, CYLINDER BODY	1	
10	37820-87L01	.SWITCH ASSY, EMERGENCY	1	
11	37823-92E01	..PLATE, LOCK	1	
12	37826-92J00	..NUT	1	
13	38500-93J90	.BUZZER	1	
14	37852-87J00	.PLATE, TRIM SWITCH	1	
15	63121-88L00	.COVER, UNDER	1	
16	63210-88L00	.GRIP, HANDLE	1	
17	63221-88L00	.SHAFT, THROTTLE	1	
18	63223-92D00	.STOPPER, HANDLE ROD	1	
19	63225-88L00	.BUSH, HANDLE ROD	1	
20	63227-93200	.PIN, HANDLE ROD	1	
21	63235-88L00	.PLATE, THROTTLE SHAFT	1	
22	63246-88L00	.STOPPER THROTTLE ADJ	1	
23	63250-88L00	.ARM ASSY, THROTTLE	1	

FIG.444E

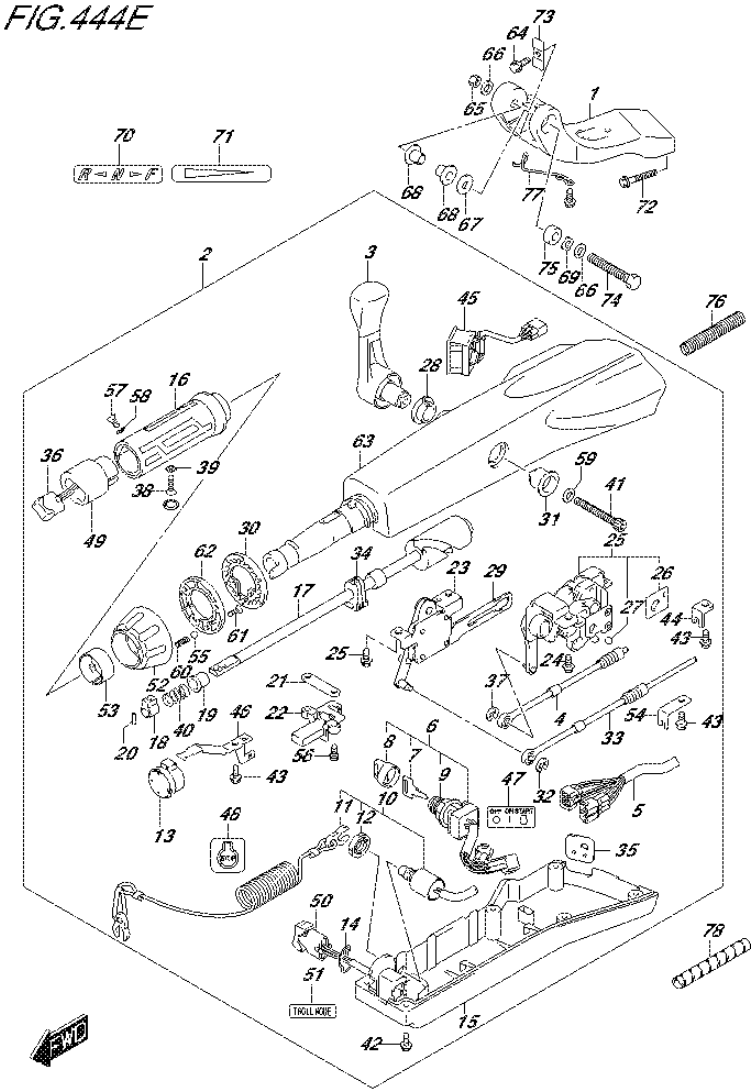

FIG.444E (4-C-13) TILLER HANDLE (DF60AQH E40)

REF NO.	PART NO.	DESCRIPTION	Q'TY	REMARKS
24	63251-87J00	.BOLT, SHIFT GEAR ASSY	4	
25	63260-88L00	.GEAR ASSY, SHIFT	1	
26	63272-87J00	..PLATE, BALL GUIDE	1	
27	63273-87J00	..BALL	1	
28	63262-87J00	.BUSH, SHIFT LEVER	1	
29	63271-87J00	.PLATE, LOCK	1	
30	63248-99J00	.PLATE, THROTTLE ADJ NOTCH	1	
31	63261-87J00	.BUSH, SHIFT GEAR	1	
32	63274-87J00	.E RING	1	
33	63610-88L00	.CABLE, THROTTLE	1	
34	37853-88L90	.GROMMET, PTT SWITCH LEAD	1	
35	63626-88L00	.GROMMET, CABLE	1	
36	67263-88L00	.CAP, SWITCH	1	
37	67292-87J00	.E RING	2	
38	09126-06015	.SCREW (6X23)	1	
39	09163-06001	.LOCK WASHER	1	
40	09440-12027	.SPRING	1	
41	21112-88L00	.BOLT SHIFT LEVER	1	
42	09125-05047	.SCREW (5X14)	6	
43	63611-88L00	.BOLT CLAMP BRACKET	3	
44	63612-87J00	.BRACKET, CLAMP	1	
45	34200-87L00	.TACHOMETER ASSY, WITH MONITOR	1	
46	36617-88L90	.CLAMP PLATE, MAIN HARNESS	1	
47	37112-88L90	.LABEL, IGNITION SWITCH	1	
48	37835-95D00	.LABEL, STOP	1	
49	37851-88L90	.BASE, PTT SWITCH	1	
50	37861-87L10	.SWITCH, TROLLING CONTROL	1	
51	37864-88L90	.LABEL, TROLL MODE	1	
52	63244-99J00	.KNOB, THROTTLE ADJ	1	
53	63245-99J00	.BUSH, THROTTLE ADJ	1	
54	63612-88L10	.BRACKET, CLAMP SHIFT	1	
55	09260-10006	.BALL	1	
56	63251-88L90	.BOLT	2	
57	37855-88L90	.SCREW, THROTTLE GRIP	1	

FIG.444E

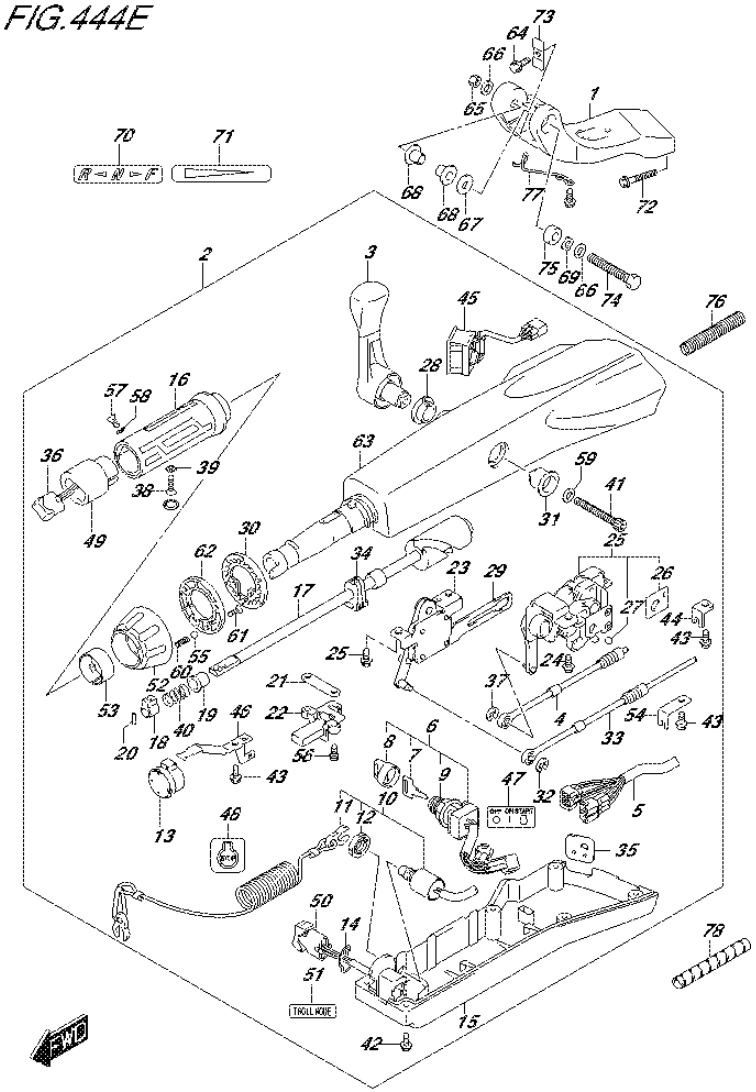

FIG.444E (4-C-14) TILLER HANDLE (DF60AQH E40)

REF NO.	PART NO.	DESCRIPTION	Q'TY	REMARKS
58	37854-88L90	.WASHER, THROTTLE GRIP	1	
59	63258-88L00	.WASHER	1	
60	09440-06037	.SPRING	1	
61	03522-05169	.SCREW	3	
62	63247-99J00	.PLATE, THROTTLE ADJ KNOB	1	
63	63111-88L00-0EP	.HOUSING, TILLER HANDLE (BLACK)	1	
64	09116-08137	BOLT (8X22)	1	
65	09159-12014	NUT	1	
66	09160-12066	WASHER (12.5X22X2.5)	2	
67	09160-12124	WASHER (12.5X32X1.5)	1	
68	63115-88L00	BUSH, TILLER HANDLE PIVOT	2	
69	09164-13010	WASHER	1	
70	21131-88L00	MARK, CLUTCH SHIFT	1	
71	63215-93110	MARK, HANDLE GRIP	1	
72	09116-10150	BOLT (10X55)	2	
73	63132-88L00	STOPPER, TILLER HANDLE	1	
74	43762-88L00	BOLT, TILLER HANDLE PIVOT	1	
75	43768-88L00	SPACER, TILLER HANDLE	1	
76	33834-88L00	TUBE, CABLE PROTECTOR	1	
77	65793-88L00	HOLDER, FUEL HOSE	1	
78	33833-91J00	TUBE, THROTTLE CABLE (L:250)	1	L:250->150

FIG.444F

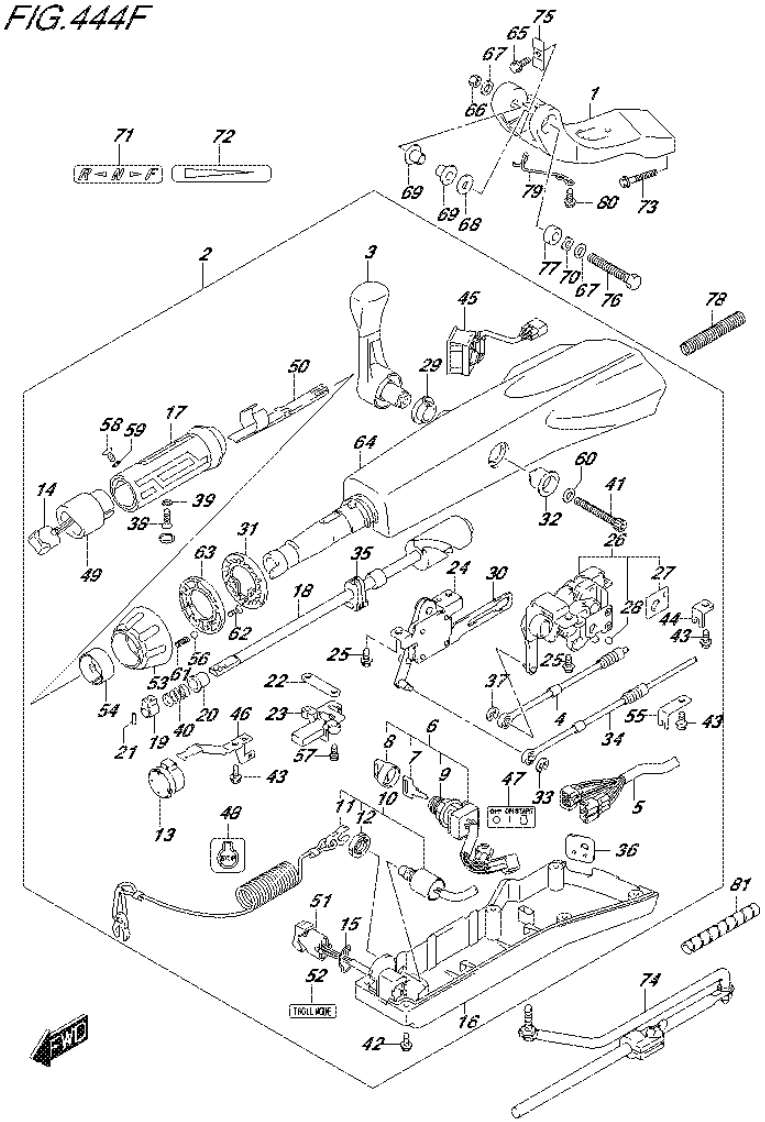

FIG.444F (4-C-15) TILLER HANDLE (DF60ATH E01)

REF NO.	PART NO.	DESCRIPTION	Q'TY	REMARKS
1	43761-88L01-0EP	BRACKET, TILLER HANDLE (BLACK)	1	
2	63110-88L21-0EP	HANDLE ASSY, TILLER (BLACK)	1	
3	21110-88L00	.LEVER, SHIFT	1	
4	23230-88L00	.CABLE, SHIFT	1	
5	36620-88L10	.WIRE ASSY, HANDLE	1	
6	37110-87L01	.SWITCH ASSY, IGNITION	1	
7-1	37141-99E00	..KEY (931)	1	
7-2	37141-99E10	..KEY (932)	1	
7-3	37141-99E20	..KEY (933)	1	
7-4	37141-99E30	..KEY (934)	1	
7-5	37141-99E40	..KEY (935)	1	
7-6	37141-99E50	..KEY (936)	1	
7-7	37141-99E60	..KEY (937)	1	
7-8	37141-99E70	..KEY (938)	1	
7-9	37141-99E80	..KEY (939)	1	
7-10	37141-99E90	..KEY (940)	1	
7-11	37141-99EA0	..KEY (941)	1	
7-12	37141-99EB0	..KEY (942)	1	
8	37143-99E00	..CAP, KEY	1	
9	37149-93J00	..CAP, CYLINDER BODY	1	
10	37820-87L01	.SWITCH ASSY, EMERGENCY	1	
11	37823-92E01	..PLATE, LOCK	1	
12	37826-92J00	..NUT	1	
13	38500-93J90	.BUZZER	1	
14	37850-87L00	.SWITCH ASSY, PTT	1	
15	37852-87J00	.PLATE, TRIM SWITCH	1	
16	63121-88L00	.COVER, UNDER	1	
17	63210-88L00	.GRIP, HANDLE	1	
18	63221-88L00	.SHAFT, THROTTLE	1	
19	63223-92D00	.STOPPER, HANDLE ROD	1	
20	63225-88L00	.BUSH, HANDLE ROD	1	
21	63227-93200	.PIN, HANDLE ROD	1	
22	63235-88L00	.PLATE, THROTTLE SHAFT	1	
23	63246-88L00	.STOPPER THROTTLE ADJ	1	

FIG.444F

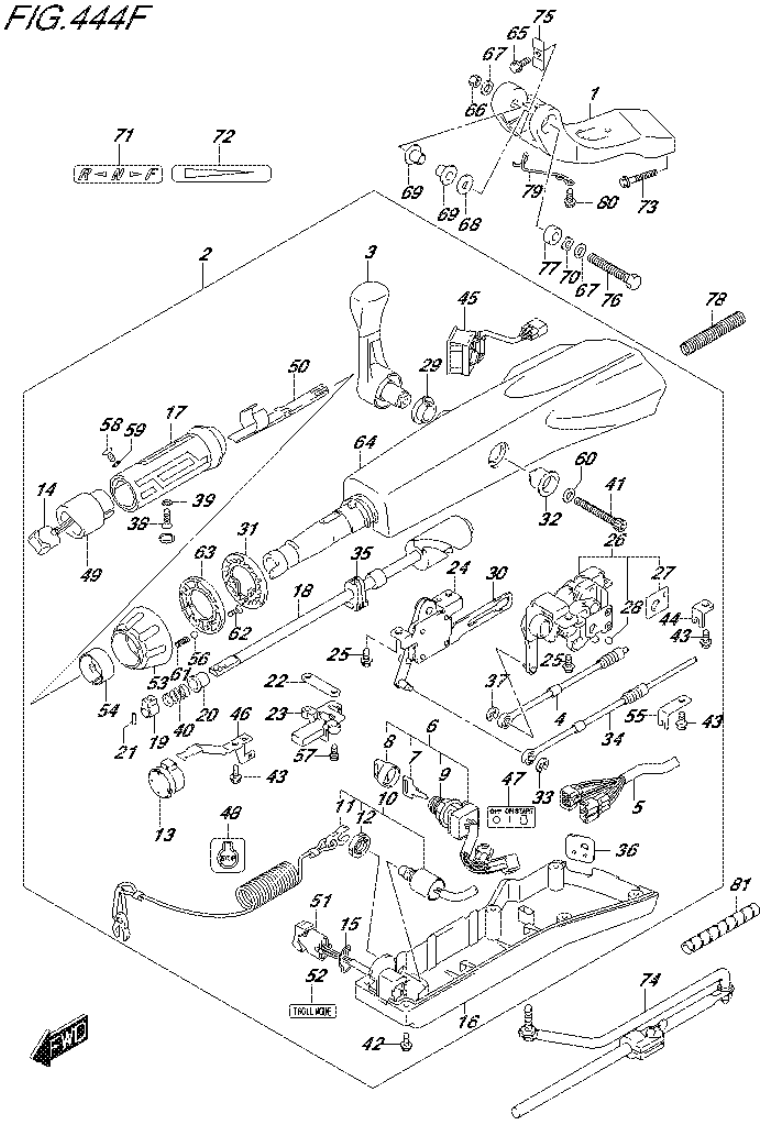

FIG.444F (4-D-2) TILLER HANDLE (DF60ATH E01)

REF NO.	PART NO.	DESCRIPTION	Q'TY	REMARKS
24	63250-88L00	.ARM ASSY, THROTTLE	1	
25	63251-87J00	.BOLT, SHIFT GEAR ASSY	4	
26	63260-88L00	.GEAR ASSY, SHIFT	1	
27	63272-87J00	..PLATE, BALL GUIDE	1	
28	63273-87J00	..BALL	1	
29	63262-87J00	.BUSH, SHIFT LEVER	1	
30	63271-87J00	.PLATE, LOCK	1	
31	63248-99J00	.PLATE, THROTTLE ADJ NOTCH	1	
32	63261-87J00	.BUSH, SHIFT GEAR	1	
33	63274-87J00	.E RING	1	
34	63610-88L00	.CABLE, THROTTLE	1	
35	37853-88L90	.GROMMET, PTT SWITCH LEAD	1	
36	63626-88L00	.GROMMET, CABLE	1	
37	67292-87J00	.E RING	2	
38	09126-06015	.SCREW (6X23)	1	
39	09163-06001	.LOCK WASHER	1	
40	09440-12027	.SPRING	1	
41	21112-88L00	.BOLT SHIFT LEVER	1	
42	09125-05047	.SCREW (5X14)	6	
43	63611-88L00	.BOLT CLAMP BRACKET	3	
44	63612-87J00	.BRACKET, CLAMP	1	
45	34200-87L00	.TACHOMETER ASSY, WITH MONITOR	1	
46	36617-88L90	.CLAMP PLATE, MAIN HARNESS	1	
47	37112-88L90	.LABEL, IGNITION SWITCH	1	
48	37835-95D00	.LABEL, STOP	1	
49	37851-88L90	.BASE, PTT SWITCH	1	
50	37852-88L90	.HARNESS, GUIDE	1	
51	37861-87L10	.SWITCH, TROLLING CONTROL	1	
52	37864-88L90	.LABEL, TROLL MODE	1	
53	63244-99J00	.KNOB, THROTTLE ADJ	1	
54	63245-99J00	.BUSH, THROTTLE ADJ	1	
55	63612-88L10	.BRACKET, CLAMP SHIFT	1	
56	09260-10006	.BALL	1	
57	63251-88L90	.BOLT	2	

FIG.444F

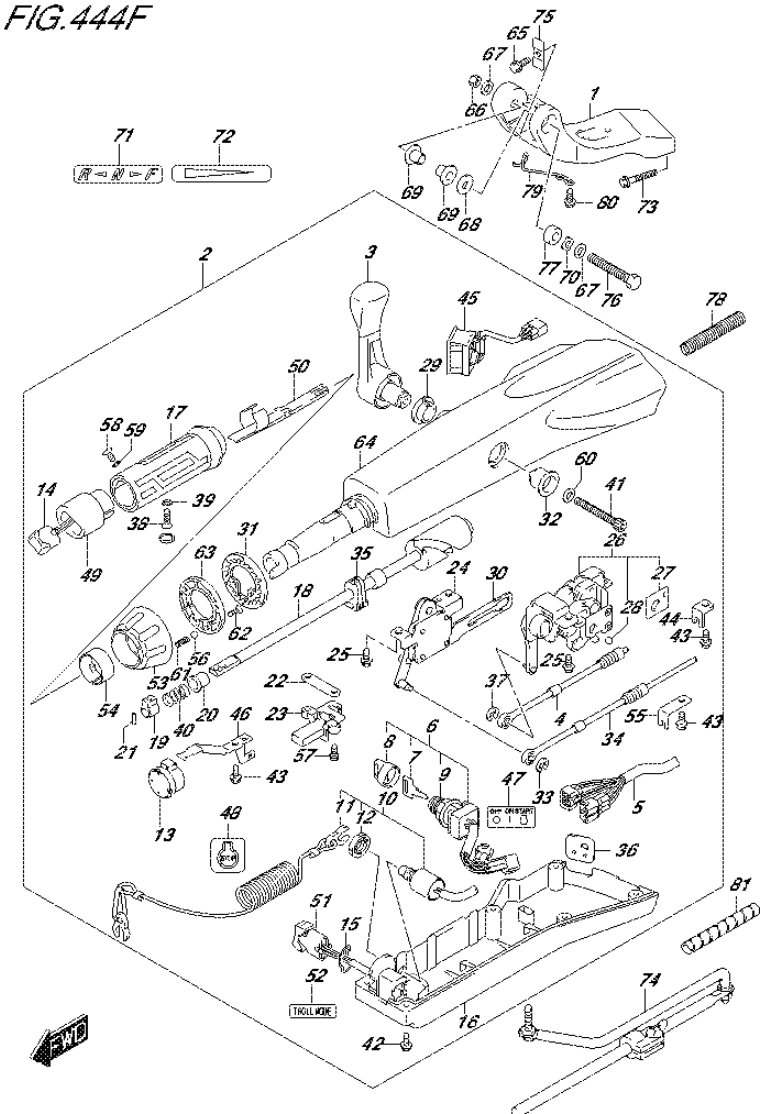

FIG.444F (4-D-3) TILLER HANDLE (DF60ATH E01)

REF NO.	PART NO.	DESCRIPTION	Q'TY	REMARKS
58	37855-88L90	.SCREW, THROTTLE GRIP	1	
59	37854-88L90	.WASHER, THROTTLE GRIP	1	
60	63258-88L00	.WASHER	1	
61	09440-06037	.SPRING	1	
62	03522-05169	.SCREW	3	
63	63247-99J00	.PLATE,THROTTLE ADJ KNOB	1	
64	63111-88L00-0EP	.HOUSING, TILLER HANDLE (BLACK)	1	
65	09116-08137	BOLT (8X22)	1	
66	09159-12014	NUT	1	
67	09160-12066	WASHER (12.5X22X2.5)	2	
68	09160-12124	WASHER (12.5X32X1.5)	1	
69	63115-88L00	BUSH, TILLER HANDLE PIVOT	2	
70	09164-13010	WASHER	1	
71	21131-88L00	MARK, CLUTCH SHIFT	1	
72	63215-93110	MARK, HANDLE GRIP	1	
73	09116-10150	BOLT (10X55)	2	
74	43770-99E03	ADJUSTER ASSY, STEERING	1	
75	63132-88L00	STOPPER, TILLER HANDLE	1	
76	43762-88L00	BOLT, TILLER HANDLE PIVOT	1	
77	43768-88L00	SPACER, TILLER HANDLE	1	
78	33834-88L00	TUBE, CABLE PROTECTOR	1	
79	65793-88L00	HOLDER, FUEL HOSE	1	
80	09116-06237	BOLT (6X15)	2	
81	33833-91J00	TUBE, THROTTLE CABLE (L:250)	1	L:250->150

FIG.444G

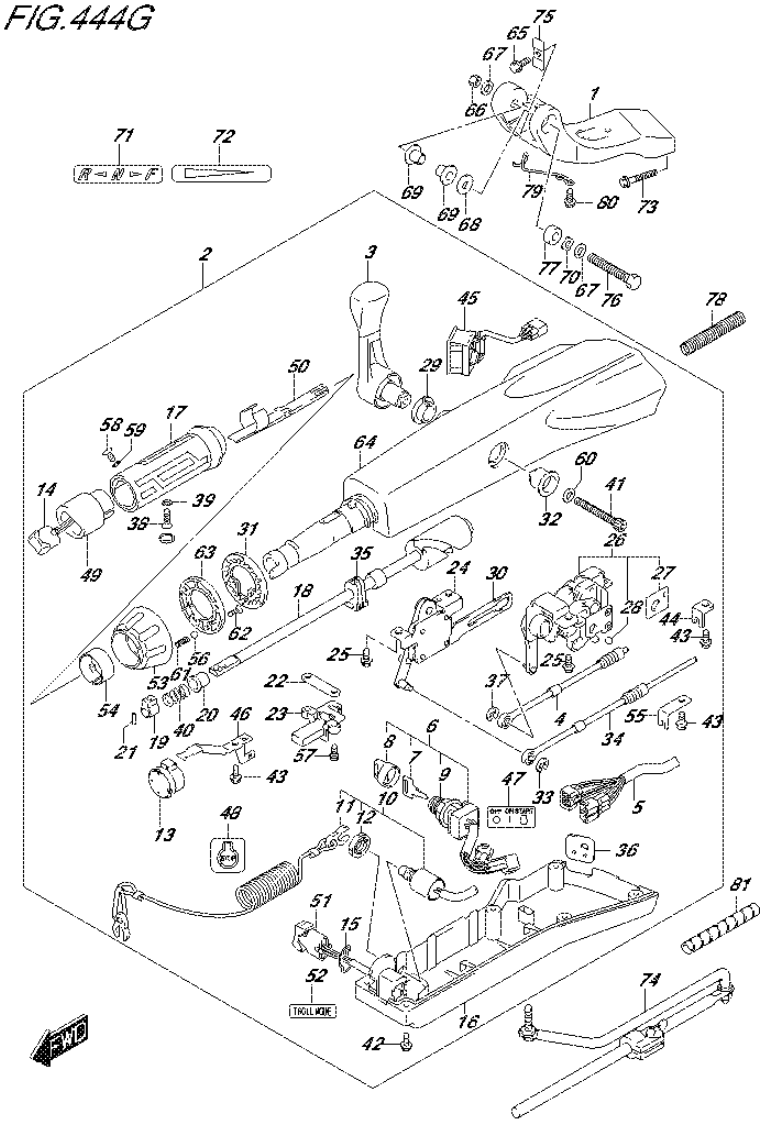

FIG.444G (4-D-4) TILLER HANDLE (DF60ATH E40)

REF NO.	PART NO.	DESCRIPTION	Q'TY	REMARKS
1	43761-88L01-0EP	BRACKET, TILLER HANDLE (BLACK)	1	
2	63110-88L21-0EP	HANDLE ASSY, TILLER (BLACK)	1	
3	21110-88L00	.LEVER, SHIFT	1	
4	23230-88L00	.CABLE, SHIFT	1	
5	36620-88L10	.WIRE ASSY, HANDLE	1	
6	37110-87L01	.SWITCH ASSY, IGNITION	1	
7-1	37141-99E00	..KEY (931)	1	
7-2	37141-99E10	..KEY (932)	1	
7-3	37141-99E20	..KEY (933)	1	
7-4	37141-99E30	..KEY (934)	1	
7-5	37141-99E40	..KEY (935)	1	
7-6	37141-99E50	..KEY (936)	1	
7-7	37141-99E60	..KEY (937)	1	
7-8	37141-99E70	..KEY (938)	1	
7-9	37141-99E80	..KEY (939)	1	
7-10	37141-99E90	..KEY (940)	1	
7-11	37141-99EA0	..KEY (941)	1	
7-12	37141-99EB0	..KEY (942)	1	
8	37143-99E00	..CAP, KEY	1	
9	37149-93J00	..CAP, CYLINDER BODY	1	
10	37820-87L01	.SWITCH ASSY, EMERGENCY	1	
11	37823-92E01	..PLATE, LOCK	1	
12	37826-92J00	..NUT	1	
13	38500-93J90	.BUZZER	1	
14	37850-87L00	.SWITCH ASSY, PTT	1	
15	37852-87J00	.PLATE, TRIM SWITCH	1	
16	63121-88L00	.COVER, UNDER	1	
17	63210-88L00	.GRIP, HANDLE	1	
18	63221-88L00	.SHAFT, THROTTLE	1	
19	63223-92D00	.STOPPER, HANDLE ROD	1	
20	63225-88L00	.BUSH, HANDLE ROD	1	
21	63227-93200	.PIN, HANDLE ROD	1	
22	63235-88L00	.PLATE, THROTTLE SHAFT	1	
23	63246-88L00	.STOPPER THROTTLE ADJ	1	

FIG.444G

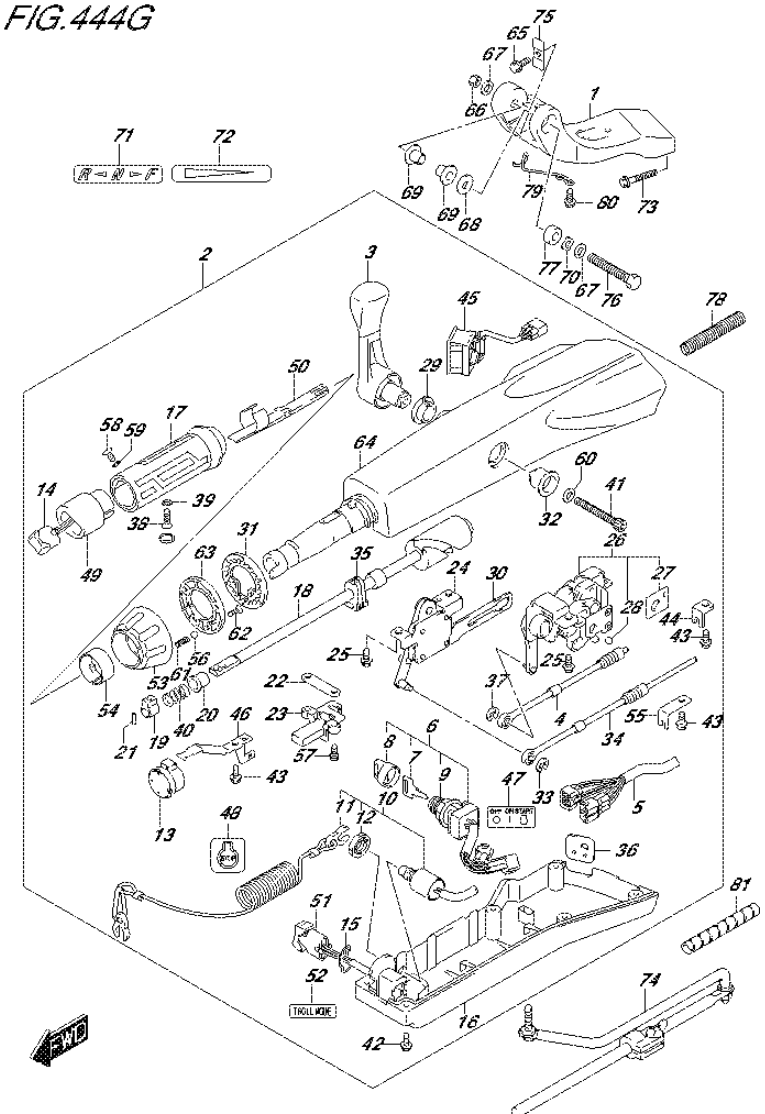

FIG.444G (4-D-5) TILLER HANDLE (DF60ATH E40)

REF NO.	PART NO.	DESCRIPTION	Q'TY	REMARKS
24	63250-88L00	.ARM ASSY, THROTTLE	1	
25	63251-87J00	.BOLT, SHIFT GEAR ASSY	4	
26	63260-88L00	.GEAR ASSY, SHIFT	1	
27	63272-87J00	..PLATE, BALL GUIDE	1	
28	63273-87J00	..BALL	1	
29	63262-87J00	.BUSH, SHIFT LEVER	1	
30	63271-87J00	.PLATE, LOCK	1	
31	63248-99J00	.PLATE, THROTTLE ADJ NOTCH	1	
32	63261-87J00	.BUSH, SHIFT GEAR	1	
33	63274-87J00	.E RING	1	
34	63610-88L00	.CABLE, THROTTLE	1	
35	37853-88L90	.GROMMET, PTT SWITCH LEAD	1	
36	63626-88L00	.GROMMET, CABLE	1	
37	67292-87J00	.E RING	2	
38	09126-06015	.SCREW (6X23)	1	
39	09163-06001	.LOCK WASHER	1	
40	09440-12027	.SPRING	1	
41	21112-88L00	.BOLT SHIFT LEVER	1	
42	09125-05047	.SCREW (5X14)	6	
43	63611-88L00	.BOLT CLAMP BRACKET	3	
44	63612-87J00	.BRACKET, CLAMP	1	
45	34200-87L00	.TACHOMETER ASSY, WITH MONITOR	1	
46	36617-88L90	.CLAMP PLATE, MAIN HARNESS	1	
47	37112-88L90	.LABEL, IGNITION SWITCH	1	
48	37835-95D00	.LABEL, STOP	1	
49	37851-88L90	.BASE, PTT SWITCH	1	
50	37852-88L90	.HARNESS, GUIDE	1	
51	37861-87L10	.SWITCH, TROLLING CONTROL	1	
52	37864-88L90	.LABEL, TROLL MODE	1	
53	63244-99J00	.KNOB, THROTTLE ADJ	1	
54	63245-99J00	.BUSH, THROTTLE ADJ	1	
55	63612-88L10	.BRACKET, CLAMP SHIFT	1	
56	09260-10006	.BALL	1	
57	63251-88L90	.BOLT	2	

FIG.444G

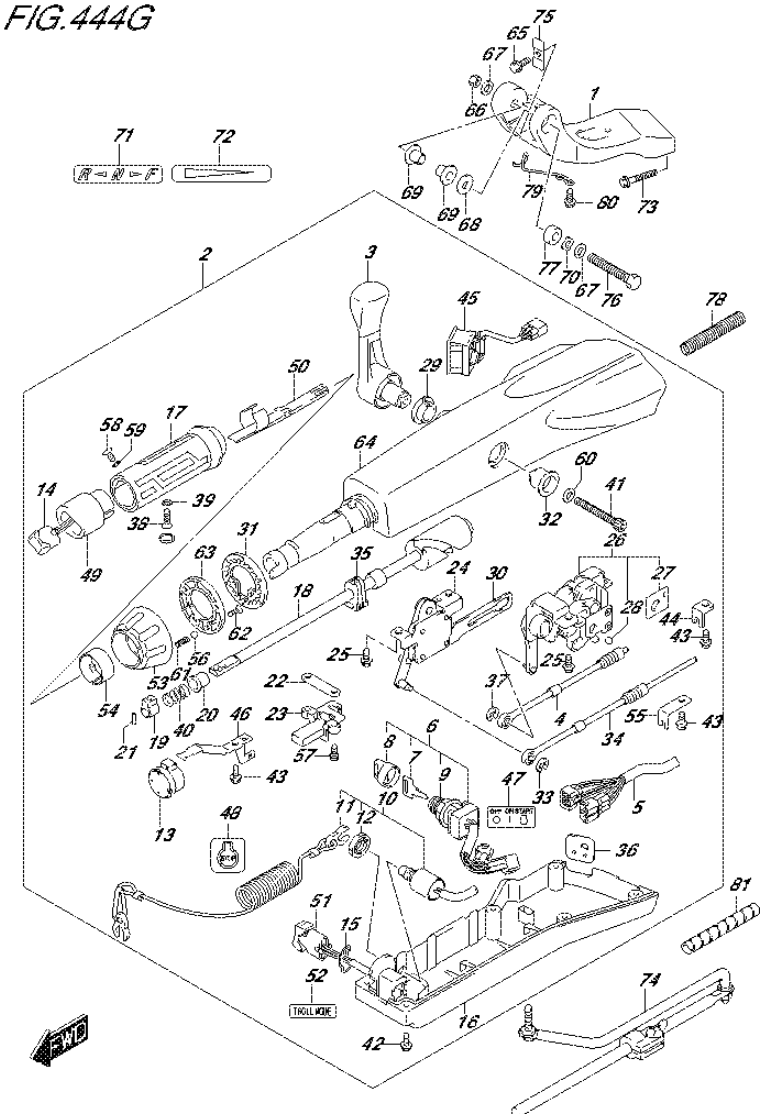

FIG.444G (4-D-6) TILLER HANDLE (DF60ATH E40)

REF NO.	PART NO.	DESCRIPTION	Q'TY	REMARKS
58	37855-88L90	.SCREW, THROTTLE GRIP	1	
59	37854-88L90	.WASHER, THROTTLE GRIP	1	
60	63258-88L00	.WASHER	1	
61	09440-06037	.SPRING	1	
62	03522-05169	.SCREW	3	
63	63247-99J00	.PLATE,THROTTLE ADJ KNOB	1	
64	63111-88L00-0EP	.HOUSING, TILLER HANDLE (BLACK)	1	
65	09116-08137	BOLT (8X22)	1	
66	09159-12014	NUT	1	
67	09160-12066	WASHER (12.5X22X2.5)	2	
68	09160-12124	WASHER (12.5X32X1.5)	1	
69	63115-88L00	BUSH, TILLER HANDLE PIVOT	2	
70	09164-13010	WASHER	1	
71	21131-88L00	MARK, CLUTCH SHIFT	1	
72	63215-93110	MARK, HANDLE GRIP	1	
73	09116-10150	BOLT (10X55)	2	
74	43770-99E03	ADJUSTER ASSY, STEERING	1	
75	63132-88L00	STOPPER, TILLER HANDLE	1	
76	43762-88L00	BOLT, TILLER HANDLE PIVOT	1	
77	43768-88L00	SPACER, TILLER HANDLE	1	
78	33834-88L00	TUBE, CABLE PROTECTOR	1	
79	65793-88L00	HOLDER, FUEL HOSE	1	
80	09116-06237	BOLT (6X15)	2	
81	33833-91J00	TUBE, THROTTLE CABLE (L:250)	1	L:250->150

FIG.444H

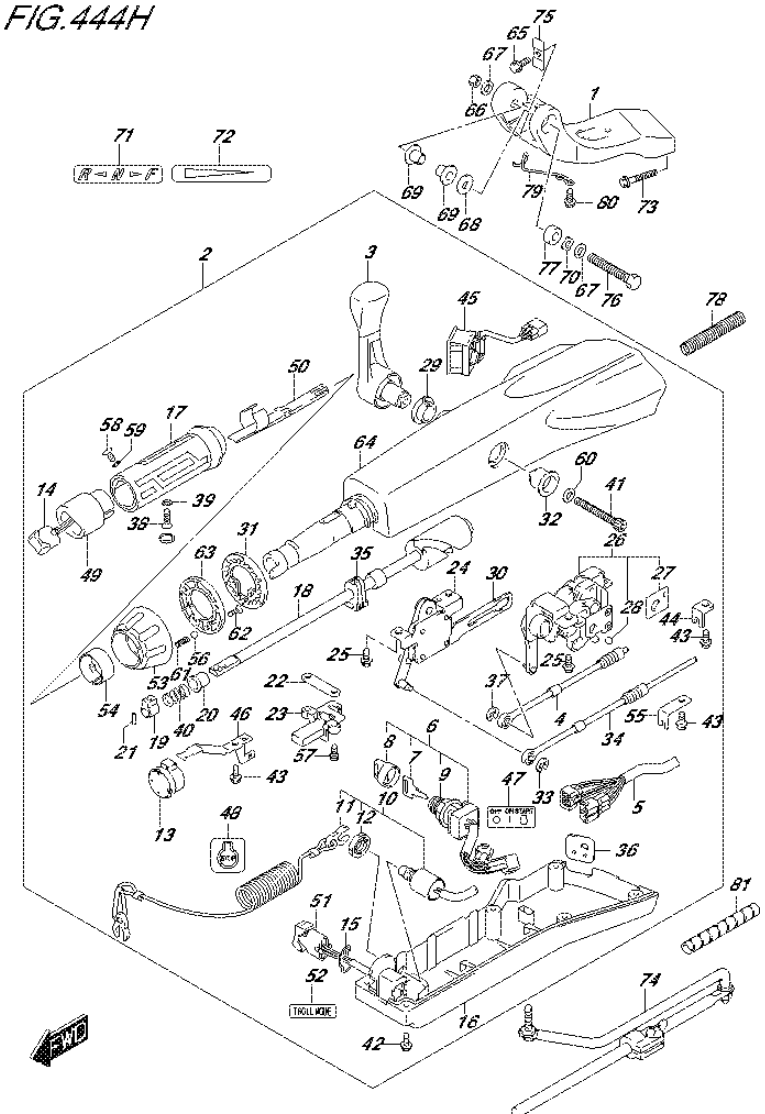

FIG.444H (4-D-7) TILLER HANDLE (DF50AVTH E01)

REF NO.	PART NO.	DESCRIPTION	Q'TY	REMARKS
1	43761-88L01-0EP	BRACKET, TILLER HANDLE (BLACK)	1	
2	63110-88L21-0EP	HANDLE ASSY, TILLER (BLACK)	1	
3	21110-88L00	.LEVER, SHIFT	1	
4	23230-88L00	.CABLE, SHIFT	1	
5	36620-88L10	.WIRE ASSY, HANDLE	1	
6	37110-87L01	.SWITCH ASSY, IGNITION	1	
7-1	37141-99E00	..KEY (931)	1	
7-2	37141-99E10	..KEY (932)	1	
7-3	37141-99E20	..KEY (933)	1	
7-4	37141-99E30	..KEY (934)	1	
7-5	37141-99E40	..KEY (935)	1	
7-6	37141-99E50	..KEY (936)	1	
7-7	37141-99E60	..KEY (937)	1	
7-8	37141-99E70	..KEY (938)	1	
7-9	37141-99E80	..KEY (939)	1	
7-10	37141-99E90	..KEY (940)	1	
7-11	37141-99EA0	..KEY (941)	1	
7-12	37141-99EB0	..KEY (942)	1	
8	37143-99E00	..CAP, KEY	1	
9	37149-93J00	..CAP, CYLINDER BODY	1	
10	37820-87L01	.SWITCH ASSY, EMERGENCY	1	
11	37823-92E01	..PLATE, LOCK	1	
12	37826-92J00	..NUT	1	
13	38500-93J90	.BUZZER	1	
14	37850-87L00	.SWITCH ASSY, PTT	1	
15	37852-87J00	.PLATE, TRIM SWITCH	1	
16	63121-88L00	.COVER, UNDER	1	
17	63210-88L00	.GRIP, HANDLE	1	
18	63221-88L00	.SHAFT, THROTTLE	1	
19	63223-92D00	.STOPPER, HANDLE ROD	1	
20	63225-88L00	.BUSH, HANDLE ROD	1	
21	63227-93200	.PIN, HANDLE ROD	1	
22	63235-88L00	.PLATE, THROTTLE SHAFT	1	
23	63246-88L00	.STOPPER THROTTLE ADJ	1	

FIG.444H

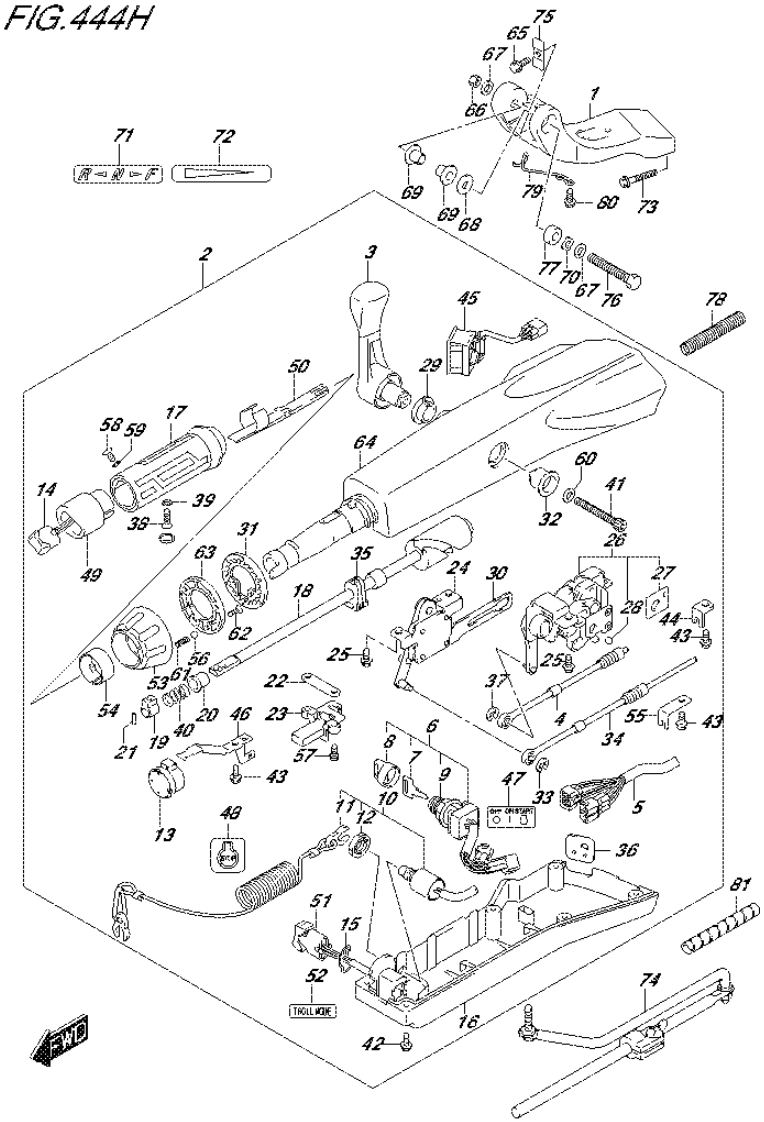

FIG.444H (4-D-8) TILLER HANDLE (DF50AVTH E01)

REF NO.	PART NO.	DESCRIPTION	Q'TY	REMARKS
24	63250-88L00	.ARM ASSY, THROTTLE	1	
25	63251-87J00	.BOLT, SHIFT GEAR ASSY	4	
26	63260-88L00	.GEAR ASSY, SHIFT	1	
27	63272-87J00	..PLATE, BALL GUIDE	1	
28	63273-87J00	..BALL	1	
29	63262-87J00	.BUSH, SHIFT LEVER	1	
30	63271-87J00	.PLATE, LOCK	1	
31	63248-99J00	.PLATE, THROTTLE ADJ NOTCH	1	
32	63261-87J00	.BUSH, SHIFT GEAR	1	
33	63274-87J00	.E RING	1	
34	63610-88L00	.CABLE, THROTTLE	1	
35	37853-88L90	.GROMMET, PTT SWITCH LEAD	1	
36	63626-88L00	.GROMMET, CABLE	1	
37	67292-87J00	.E RING	2	
38	09126-06015	.SCREW (6X23)	1	
39	09163-06001	.LOCK WASHER	1	
40	09440-12027	.SPRING	1	
41	21112-88L00	.BOLT SHIFT LEVER	1	
42	09125-05047	.SCREW (5X14)	6	
43	63611-88L00	.BOLT CLAMP BRACKET	3	
44	63612-87J00	.BRACKET, CLAMP	1	
45	34200-87L00	.TACHOMETER ASSY, WITH MONITOR	1	
46	36617-88L90	.CLAMP PLATE, MAIN HARNESS	1	
47	37112-88L90	.LABEL, IGNITION SWITCH	1	
48	37835-95D00	.LABEL, STOP	1	
49	37851-88L90	.BASE, PTT SWITCH	1	
50	37852-88L90	.HARNESS, GUIDE	1	
51	37861-87L10	.SWITCH, TROLLING CONTROL	1	
52	37864-88L90	.LABEL, TROLL MODE	1	
53	63244-99J00	.KNOB, THROTTLE ADJ	1	
54	63245-99J00	.BUSH, THROTTLE ADJ	1	
55	63612-88L10	.BRACKET, CLAMP SHIFT	1	
56	09260-10006	.BALL	1	
57	63251-88L90	.BOLT	2	

FIG.444H

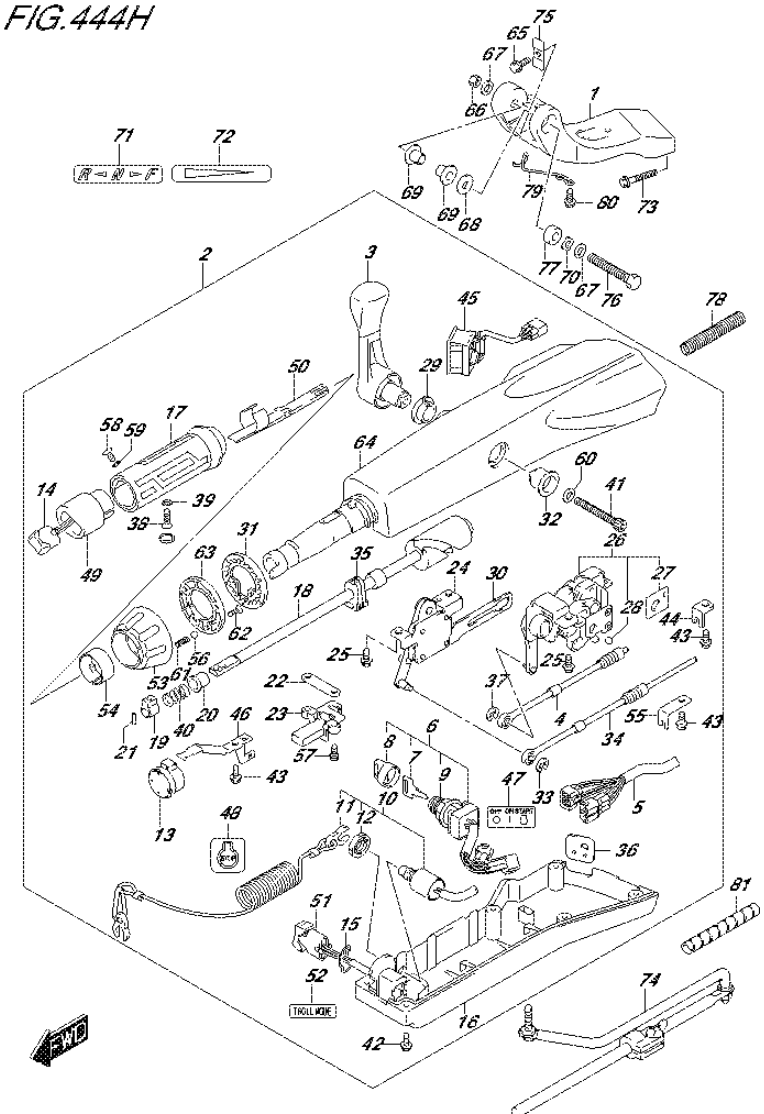

FIG.444H (4-D-9) TILLER HANDLE (DF50AVTH E01)

REF NO.	PART NO.	DESCRIPTION	Q'TY	REMARKS
58	37855-88L90	.SCREW, THROTTLE GRIP	1	
59	37854-88L90	.WASHER, THROTTLE GRIP	1	
60	63258-88L00	.WASHER	1	
61	09440-06037	.SPRING	1	
62	03522-05169	.SCREW	3	
63	63247-99J00	.PLATE,THROTTLE ADJ KNOB	1	
64	63111-88L00-0EP	.HOUSING, TILLER HANDLE (BLACK)	1	
65	09116-08137	BOLT (8X22)	1	
66	09159-12014	NUT	1	
67	09160-12066	WASHER (12.5X22X2.5)	2	
68	09160-12124	WASHER (12.5X32X1.5)	1	
69	63115-88L00	BUSH, TILLER HANDLE PIVOT	2	
70	09164-13010	WASHER	1	
71	21131-88L00	MARK, CLUTCH SHIFT	1	
72	63215-93110	MARK, HANDLE GRIP	1	
73	09116-10150	BOLT (10X55)	2	
74	43770-99E03	ADJUSTER ASSY, STEERING	1	
75	63132-88L00	STOPPER, TILLER HANDLE	1	
76	43762-88L00	BOLT, TILLER HANDLE PIVOT	1	
77	43768-88L00	SPACER, TILLER HANDLE	1	
78	33834-88L00	TUBE, CABLE PROTECTOR	1	
79	65793-88L00	HOLDER, FUEL HOSE	1	
80	09116-06237	BOLT (6X15)	2	
81	33833-91J00	TUBE, THROTTLE CABLE (L:250)	1	L:250->150

FIG.444J

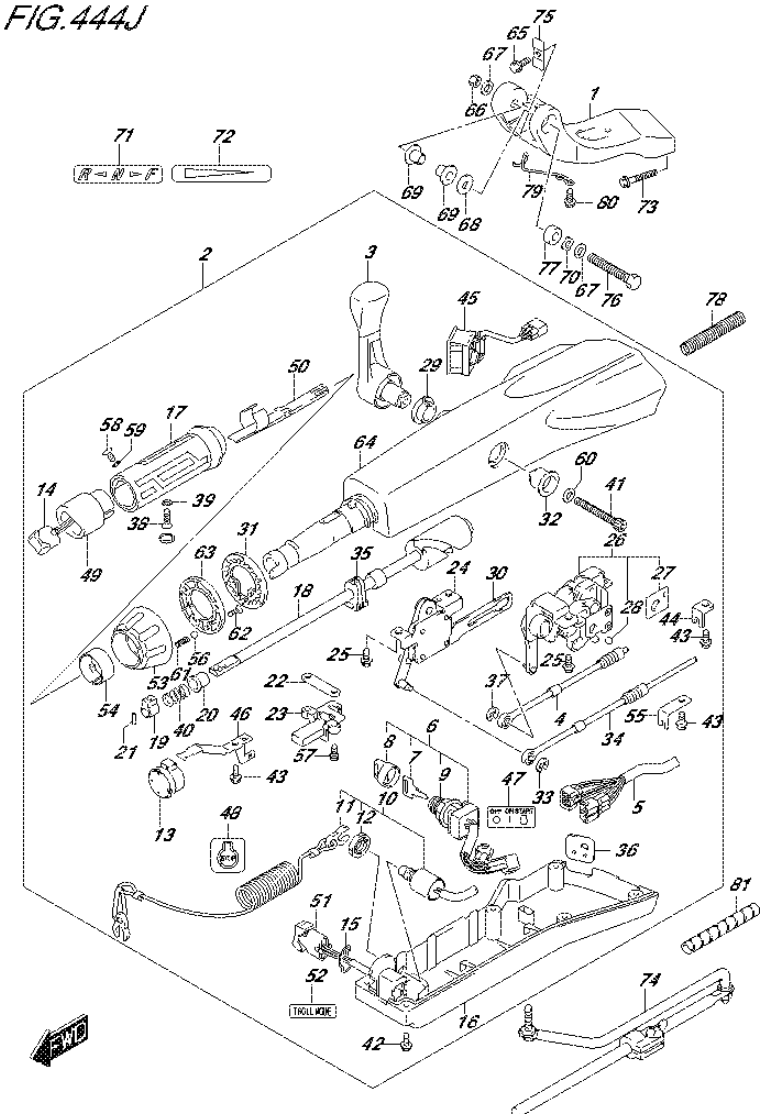

FIG.444J (4-D-10) TILLER HANDLE (DF60AVTH E01)

REF NO.	PART NO.	DESCRIPTION	Q'TY	REMARKS
1	43761-88L01-0EP	BRACKET, TILLER HANDLE (BLACK)	1	
2	63110-88L21-0EP	HANDLE ASSY, TILLER (BLACK)	1	
3	21110-88L00	.LEVER, SHIFT	1	
4	23230-88L00	.CABLE, SHIFT	1	
5	36620-88L10	.WIRE ASSY, HANDLE	1	
6	37110-87L01	.SWITCH ASSY, IGNITION	1	
7-1	37141-99E00	..KEY (931)	1	
7-2	37141-99E10	..KEY (932)	1	
7-3	37141-99E20	..KEY (933)	1	
7-4	37141-99E30	..KEY (934)	1	
7-5	37141-99E40	..KEY (935)	1	
7-6	37141-99E50	..KEY (936)	1	
7-7	37141-99E60	..KEY (937)	1	
7-8	37141-99E70	..KEY (938)	1	
7-9	37141-99E80	..KEY (939)	1	
7-10	37141-99E90	..KEY (940)	1	
7-11	37141-99EA0	..KEY (941)	1	
7-12	37141-99EB0	..KEY (942)	1	
8	37143-99E00	..CAP, KEY	1	
9	37149-93J00	..CAP, CYLINDER BODY	1	
10	37820-87L01	.SWITCH ASSY, EMERGENCY	1	
11	37823-92E01	..PLATE, LOCK	1	
12	37826-92J00	..NUT	1	
13	38500-93J90	.BUZZER	1	
14	37850-87L00	.SWITCH ASSY, PTT	1	
15	37852-87J00	.PLATE, TRIM SWITCH	1	
16	63121-88L00	.COVER, UNDER	1	
17	63210-88L00	.GRIP, HANDLE	1	
18	63221-88L00	.SHAFT, THROTTLE	1	
19	63223-92D00	.STOPPER, HANDLE ROD	1	
20	63225-88L00	.BUSH, HANDLE ROD	1	
21	63227-93200	.PIN, HANDLE ROD	1	
22	63235-88L00	.PLATE, THROTTLE SHAFT	1	
23	63246-88L00	.STOPPER THROTTLE ADJ	1	

FIG.444J

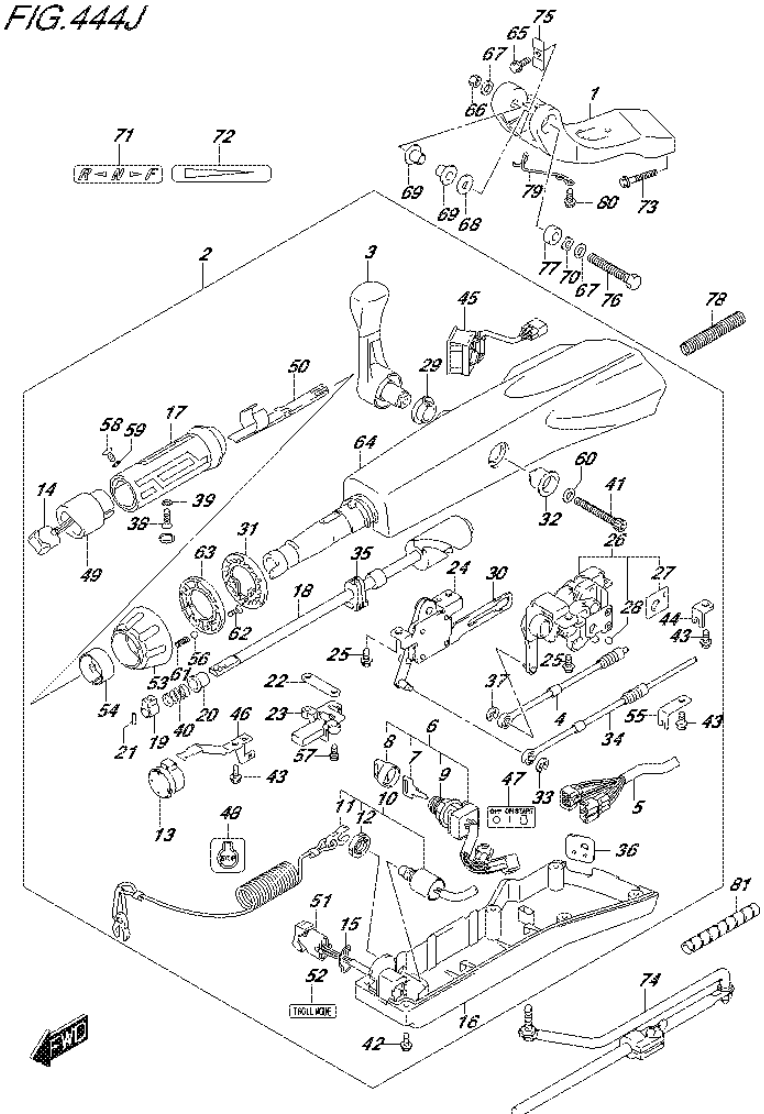

FIG.444J (4-D-11) TILLER HANDLE (DF60AVTH E01)

REF NO.	PART NO.	DESCRIPTION	Q'TY	REMARKS
24	63250-88L00	.ARM ASSY, THROTTLE	1	
25	63251-87J00	.BOLT, SHIFT GEAR ASSY	4	
26	63260-88L00	.GEAR ASSY, SHIFT	1	
27	63272-87J00	..PLATE, BALL GUIDE	1	
28	63273-87J00	..BALL	1	
29	63262-87J00	.BUSH, SHIFT LEVER	1	
30	63271-87J00	.PLATE, LOCK	1	
31	63248-99J00	.PLATE, THROTTLE ADJ NOTCH	1	
32	63261-87J00	.BUSH, SHIFT GEAR	1	
33	63274-87J00	.E RING	1	
34	63610-88L00	.CABLE, THROTTLE	1	
35	37853-88L90	.GROMMET, PTT SWITCH LEAD	1	
36	63626-88L00	.GROMMET, CABLE	1	
37	67292-87J00	.E RING	2	
38	09126-06015	.SCREW (6X23)	1	
39	09163-06001	.LOCK WASHER	1	
40	09440-12027	.SPRING	1	
41	21112-88L00	.BOLT SHIFT LEVER	1	
42	09125-05047	.SCREW (5X14)	6	
43	63611-88L00	.BOLT CLAMP BRACKET	3	
44	63612-87J00	.BRACKET, CLAMP	1	
45	34200-87L00	.TACHOMETER ASSY, WITH MONITOR	1	
46	36617-88L90	.CLAMP PLATE, MAIN HARNESS	1	
47	37112-88L90	.LABEL, IGNITION SWITCH	1	
48	37835-95D00	.LABEL, STOP	1	
49	37851-88L90	.BASE, PTT SWITCH	1	
50	37852-88L90	.HARNESS, GUIDE	1	
51	37861-87L10	.SWITCH, TROLLING CONTROL	1	
52	37864-88L90	.LABEL, TROLL MODE	1	
53	63244-99J00	.KNOB, THROTTLE ADJ	1	
54	63245-99J00	.BUSH, THROTTLE ADJ	1	
55	63612-88L10	.BRACKET, CLAMP SHIFT	1	
56	09260-10006	.BALL	1	
57	63251-88L90	.BOLT	2	

FIG.444J

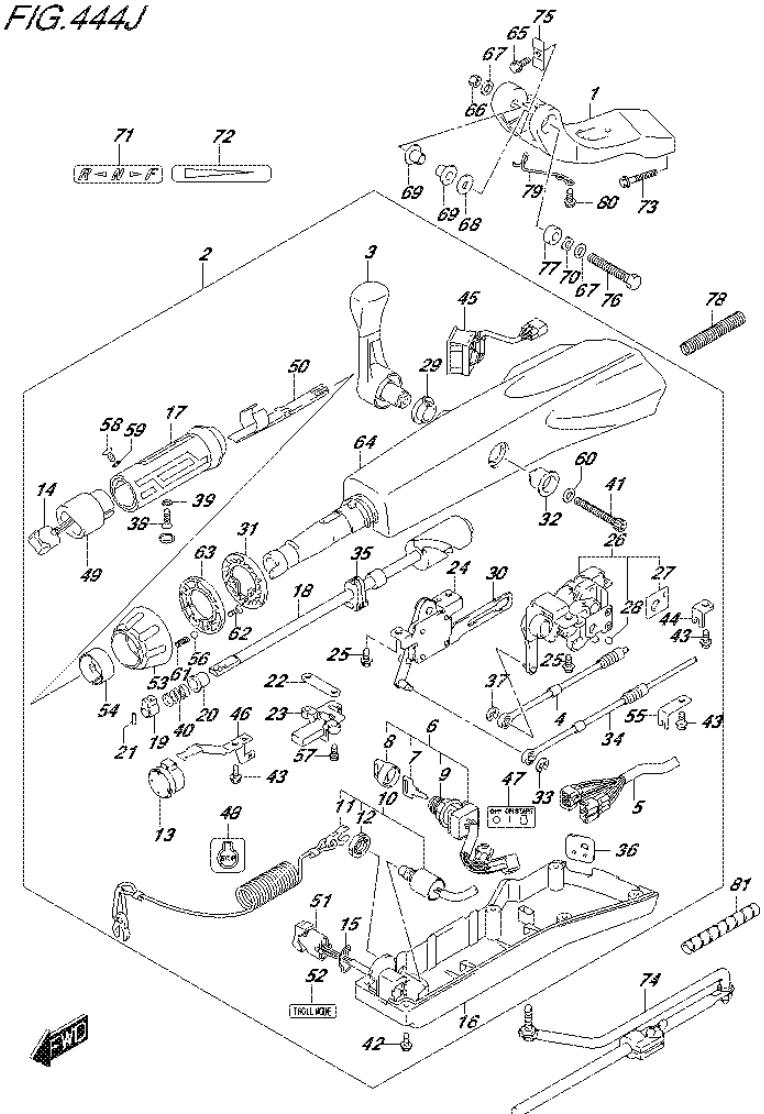

FIG.444J (4-D-12) TILLER HANDLE (DF60AVTH E01)

REF NO.	PART NO.	DESCRIPTION	Q'TY	REMARKS
58	37855-88L90	.SCREW, THROTTLE GRIP	1	
59	37854-88L90	.WASHER, THROTTLE GRIP	1	
60	63258-88L00	.WASHER	1	
61	09440-06037	.SPRING	1	
62	03522-05169	.SCREW	3	
63	63247-99J00	.PLATE,THROTTLE ADJ KNOB	1	
64	63111-88L00-0EP	.HOUSING, TILLER HANDLE (BLACK)	1	
65	09116-08137	BOLT (8X22)	1	
66	09159-12014	NUT	1	
67	09160-12066	WASHER (12.5X22X2.5)	2	
68	09160-12124	WASHER (12.5X32X1.5)	1	
69	63115-88L00	BUSH, TILLER HANDLE PIVOT	2	
70	09164-13010	WASHER	1	
71	21131-88L00	MARK, CLUTCH SHIFT	1	
72	63215-93110	MARK, HANDLE GRIP	1	
73	09116-10150	BOLT (10X55)	2	
74	43770-99E03	ADJUSTER ASSY, STEERING	1	
75	63132-88L00	STOPPER, TILLER HANDLE	1	
76	43762-88L00	BOLT, TILLER HANDLE PIVOT	1	
77	43768-88L00	SPACER, TILLER HANDLE	1	
78	33834-88L00	TUBE, CABLE PROTECTOR	1	
79	65793-88L00	HOLDER, FUEL HOSE	1	
80	09116-06237	BOLT (6X15)	2	
81	33833-91J00	TUBE, THROTTLE CABLE (L:250)	1	L:250->150

FIG.444K

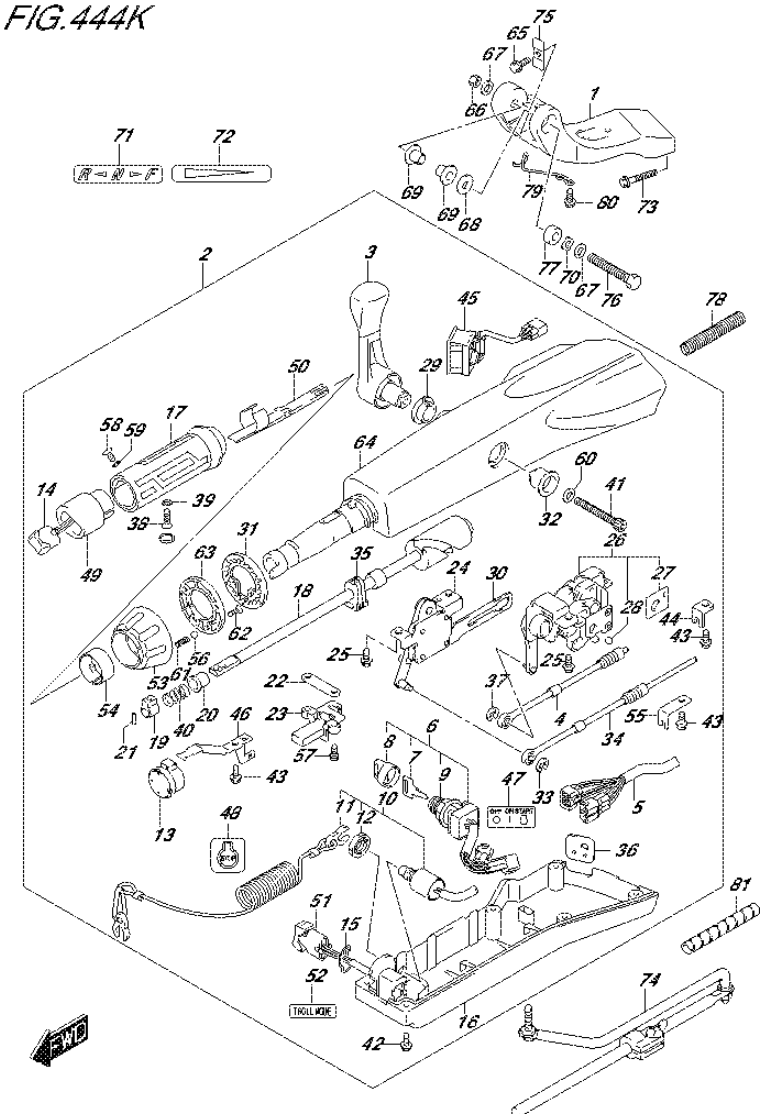

FIG.444K (4-D-13) TILLER HANDLE (DF60AVTH E40)

REF NO.	PART NO.	DESCRIPTION	Q'TY	REMARKS
1	43761-88L01-0EP	BRACKET, TILLER HANDLE (BLACK)	1	
2	63110-88L21-0EP	HANDLE ASSY, TILLER (BLACK)	1	
3	21110-88L00	.LEVER, SHIFT	1	
4	23230-88L00	.CABLE, SHIFT	1	
5	36620-88L10	.WIRE ASSY, HANDLE	1	
6	37110-87L01	.SWITCH ASSY, IGNITION	1	
7-1	37141-99E00	..KEY (931)	1	
7-2	37141-99E10	..KEY (932)	1	
7-3	37141-99E20	..KEY (933)	1	
7-4	37141-99E30	..KEY (934)	1	
7-5	37141-99E40	..KEY (935)	1	
7-6	37141-99E50	..KEY (936)	1	
7-7	37141-99E60	..KEY (937)	1	
7-8	37141-99E70	..KEY (938)	1	
7-9	37141-99E80	..KEY (939)	1	
7-10	37141-99E90	..KEY (940)	1	
7-11	37141-99EA0	..KEY (941)	1	
7-12	37141-99EB0	..KEY (942)	1	
8	37143-99E00	..CAP, KEY	1	
9	37149-93J00	..CAP, CYLINDER BODY	1	
10	37820-87L01	.SWITCH ASSY, EMERGENCY	1	
11	37823-92E01	..PLATE, LOCK	1	
12	37826-92J00	..NUT	1	
13	38500-93J90	.BUZZER	1	
14	37850-87L00	.SWITCH ASSY, PTT	1	
15	37852-87J00	.PLATE, TRIM SWITCH	1	
16	63121-88L00	.COVER, UNDER	1	
17	63210-88L00	.GRIP, HANDLE	1	
18	63221-88L00	.SHAFT, THROTTLE	1	
19	63223-92D00	.STOPPER, HANDLE ROD	1	
20	63225-88L00	.BUSH, HANDLE ROD	1	
21	63227-93200	.PIN, HANDLE ROD	1	
22	63235-88L00	.PLATE, THROTTLE SHAFT	1	
23	63246-88L00	.STOPPER THROTTLE ADJ	1	

FIG.444K

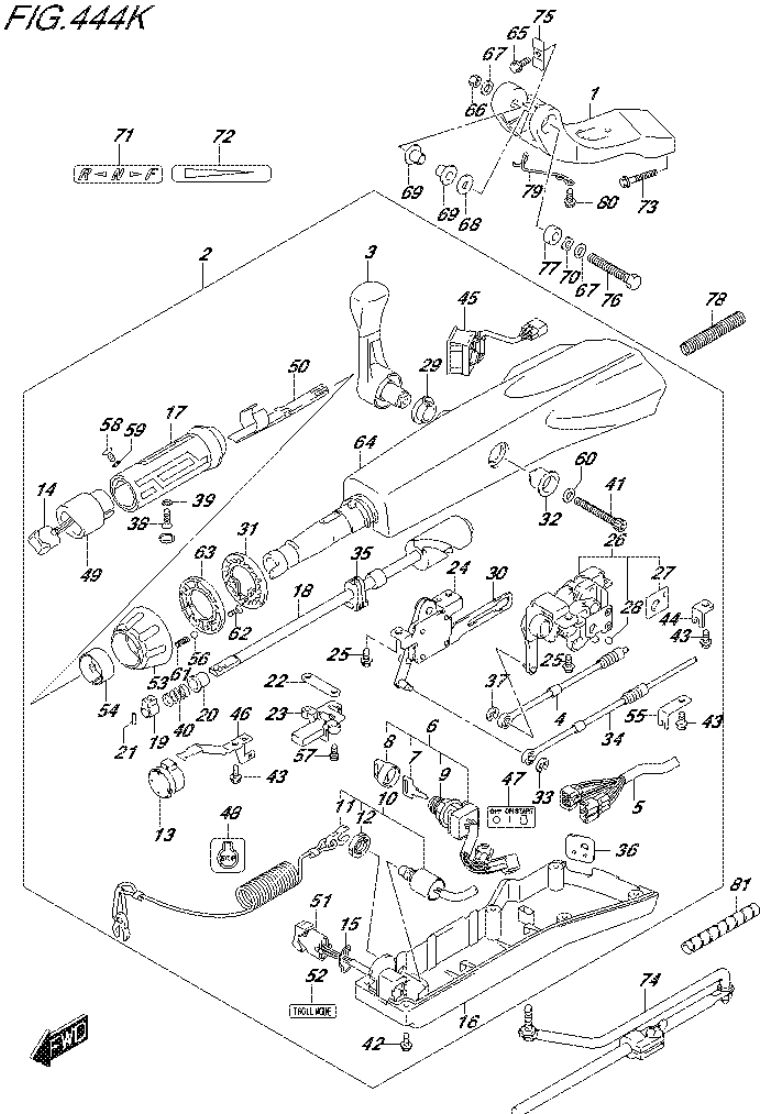

FIG.444K (4-D-14) TILLER HANDLE (DF60AVTH E40)

REF NO.	PART NO.	DESCRIPTION	Q'TY	REMARKS
24	63250-88L00	.ARM ASSY, THROTTLE	1	
25	63251-87J00	.BOLT, SHIFT GEAR ASSY	4	
26	63260-88L00	.GEAR ASSY, SHIFT	1	
27	63272-87J00	..PLATE, BALL GUIDE	1	
28	63273-87J00	..BALL	1	
29	63262-87J00	.BUSH, SHIFT LEVER	1	
30	63271-87J00	.PLATE, LOCK	1	
31	63248-99J00	.PLATE, THROTTLE ADJ NOTCH	1	
32	63261-87J00	.BUSH, SHIFT GEAR	1	
33	63274-87J00	.E RING	1	
34	63610-88L00	.CABLE, THROTTLE	1	
35	37853-88L90	.GROMMET, PTT SWITCH LEAD	1	
36	63626-88L00	.GROMMET, CABLE	1	
37	67292-87J00	.E RING	2	
38	09126-06015	.SCREW (6X23)	1	
39	09163-06001	.LOCK WASHER	1	
40	09440-12027	.SPRING	1	
41	21112-88L00	.BOLT SHIFT LEVER	1	
42	09125-05047	.SCREW (5X14)	6	
43	63611-88L00	.BOLT CLAMP BRACKET	3	
44	63612-87J00	.BRACKET, CLAMP	1	
45	34200-87L00	.TACHOMETER ASSY, WITH MONITOR	1	
46	36617-88L90	.CLAMP PLATE, MAIN HARNESS	1	
47	37112-88L90	.LABEL, IGNITION SWITCH	1	
48	37835-95D00	.LABEL, STOP	1	
49	37851-88L90	.BASE, PTT SWITCH	1	
50	37852-88L90	.HARNESS, GUIDE	1	
51	37861-87L10	.SWITCH, TROLLING CONTROL	1	
52	37864-88L90	.LABEL, TROLL MODE	1	
53	63244-99J00	.KNOB, THROTTLE ADJ	1	
54	63245-99J00	.BUSH, THROTTLE ADJ	1	
55	63612-88L10	.BRACKET, CLAMP SHIFT	1	
56	09260-10006	.BALL	1	
57	63251-88L90	.BOLT	2	

FIG.444K

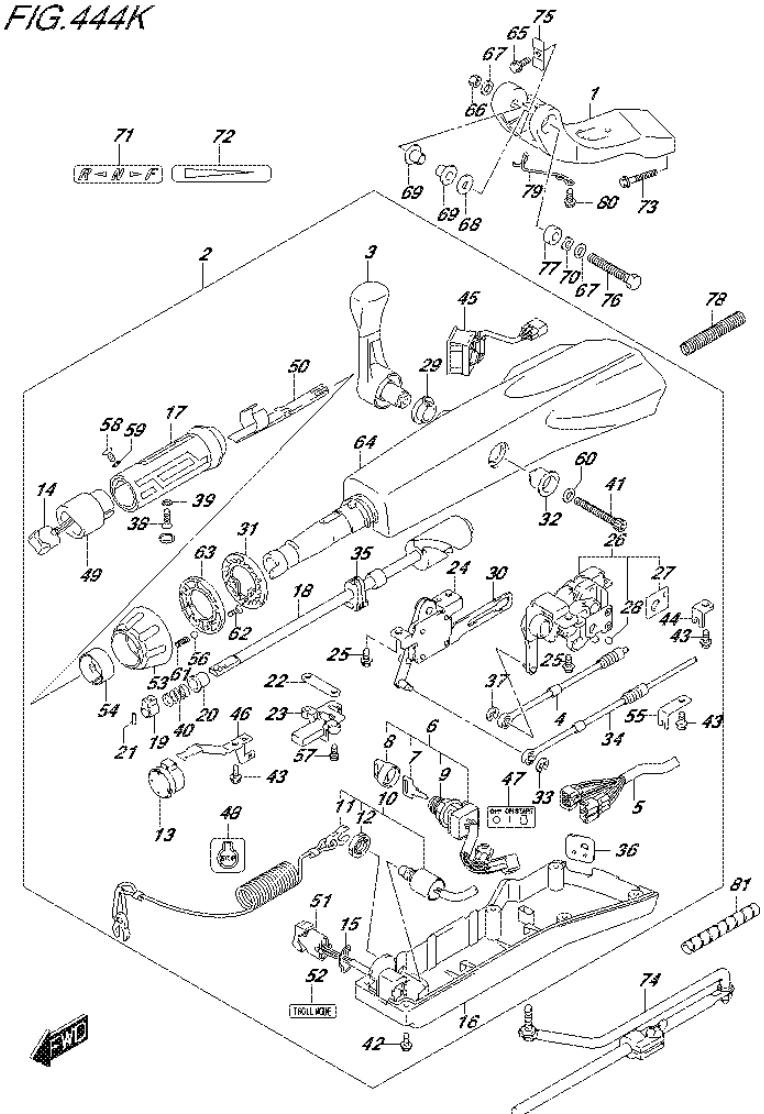

FIG.444K (4-D-15) TILLER HANDLE (DF60AVTH E40)

REF NO.	PART NO.	DESCRIPTION	Q'TY	REMARKS
58	37855-88L90	.SCREW, THROTTLE GRIP	1	
59	37854-88L90	.WASHER, THROTTLE GRIP	1	
60	63258-88L00	.WASHER	1	
61	09440-06037	.SPRING	1	
62	03522-05169	.SCREW	3	
63	63247-99J00	.PLATE,THROTTLE ADJ KNOB	1	
64	63111-88L00-0EP	.HOUSING, TILLER HANDLE (BLACK)	1	
65	09116-08137	BOLT (8X22)	1	
66	09159-12014	NUT	1	
67	09160-12066	WASHER (12.5X22X2.5)	2	
68	09160-12124	WASHER (12.5X32X1.5)	1	
69	63115-88L00	BUSH, TILLER HANDLE PIVOT	2	
70	09164-13010	WASHER	1	
71	21131-88L00	MARK, CLUTCH SHIFT	1	
72	63215-93110	MARK, HANDLE GRIP	1	
73	09116-10150	BOLT (10X55)	2	
74	43770-99E03	ADJUSTER ASSY, STEERING	1	
75	63132-88L00	STOPPER, TILLER HANDLE	1	
76	43762-88L00	BOLT, TILLER HANDLE PIVOT	1	
77	43768-88L00	SPACER, TILLER HANDLE	1	
78	33834-88L00	TUBE, CABLE PROTECTOR	1	
79	65793-88L00	HOLDER, FUEL HOSE	1	
80	09116-06237	BOLT (6X15)	2	
81	33833-91J00	TUBE, THROTTLE CABLE (L:250)	1	L:250->150

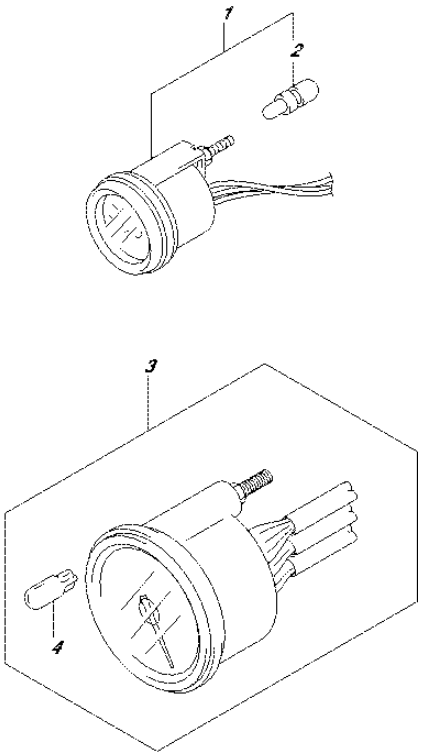

FIG.460A (4-E-2) METER (DF40A E01)

REF NO.	PART NO.	DESCRIPTION	Q'TY	REMARKS
1-1	34800-93J00	METER ASSY, TRIM	1	BLACK
1-2	34800-93J11	METER ASSY, TRIM	1	WHITE
2	09471-12108	.BULB (12V,1.7W)	1	
3-1	34200-93J00	TACHOMETER ASSY, WITH MONITOR	1	BLACK
3-2	34200-93J12	TACHOMETER ASSY, WITH MONITOR	1	WHITE
4	09471-12077	.BULB (12V,1.7W)	1	

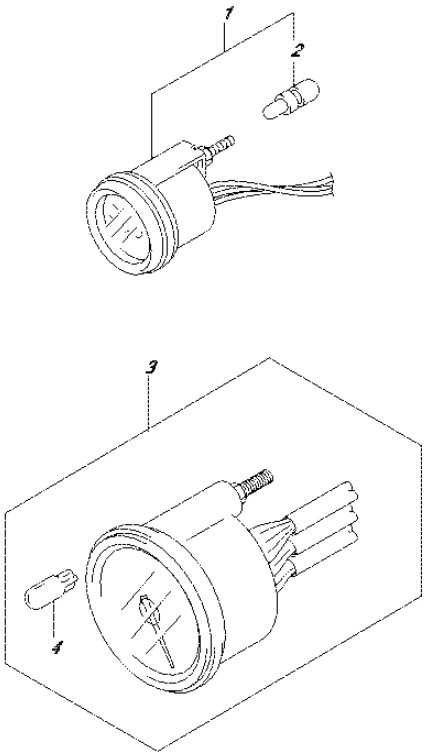

FIG.460B (4-E-3) METER (DF40AST E34)

REF NO.	PART NO.	DESCRIPTION	Q'TY	REMARKS
1	34800-93J11	METER ASSY, TRIM	1	WHITE
2	09471-12108	.BULB (12V,1.7W)	1	
3	34200-93J12	TACHOMETER ASSY, WITH MONITOR	1	WHITE
4	09471-12077	.BULB (12V,1.7W)	1	

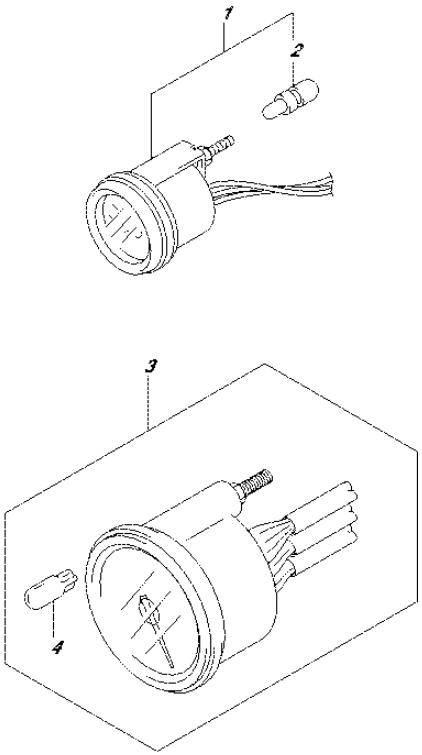

FIG.460C (4-E-4) METER (DF50A E01)

REF NO.	PART NO.	DESCRIPTION	Q'TY	REMARKS
1-1	34800-93J00	METER ASSY, TRIM	1	BLACK
1-2	34800-93J11	METER ASSY, TRIM	1	WHITE
2	09471-12108	.BULB (12V,1.7W)	1	
3-1	34200-93J00	TACHOMETER ASSY, WITH MONITOR	1	BLACK
3-2	34200-93J12	TACHOMETER ASSY, WITH MONITOR	1	WHITE
4	09471-12077	.BULB (12V,1.7W)	1	

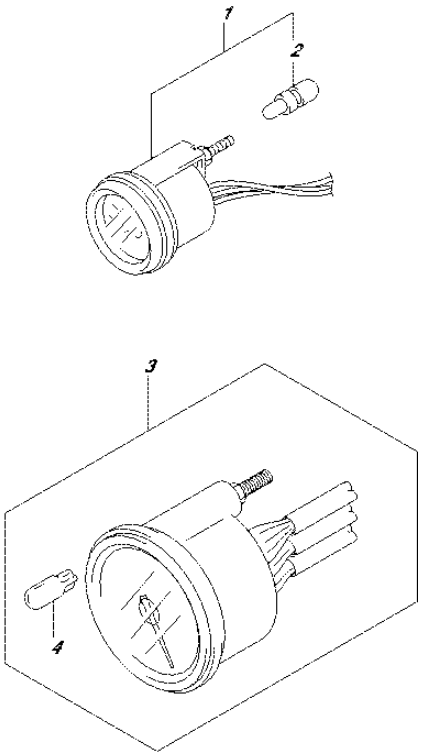

FIG.460D (4-E-5) METER (DF60A E01)

REF NO.	PART NO.	DESCRIPTION	Q'TY	REMARKS
1-1	34800-93J00	METER ASSY, TRIM	1	BLACK
1-2	34800-93J11	METER ASSY, TRIM	1	WHITE
2	09471-12108	.BULB (12V,1.7W)	1	
3-1	34200-93J00	TACHOMETER ASSY, WITH MONITOR	1	BLACK
3-2	34200-93J12	TACHOMETER ASSY, WITH MONITOR	1	WHITE
4	09471-12077	.BULB (12V,1.7W)	1	

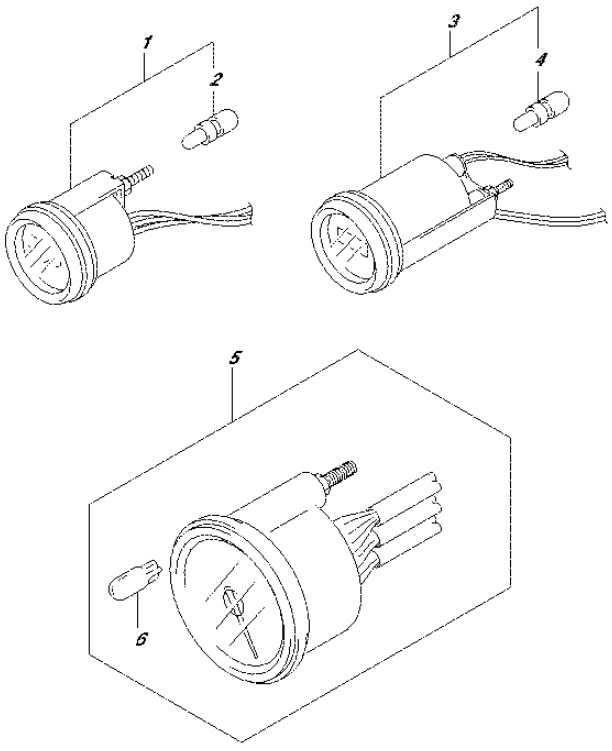

FIG.460E (4-E-6) METER (DF60A E40)

REF NO.	PART NO.	DESCRIPTION	Q'TY	REMARKS
1-1	34800-93J00	METER ASSY, TRIM	1	BLACK
1-2	34800-93J11	METER ASSY, TRIM	1	WHITE
2	09471-12108	.BULB (12V,1.7W)	1	
3-1	34500-93J00	METER ASSY, HOUR	1	BLACK
3-2	34500-93J11	METER ASSY, HOUR	1	WHITE
4	09471-12103	.BULB (12V,3W,T6.5)	1	
5-1	34200-93J00	TACHOMETER ASSY, WITH MONITOR	1	BLACK
5-2	34200-93J12	TACHOMETER ASSY, WITH MONITOR	1	WHITE
6	09471-12077	.BULB (12V,1.7W)	1	

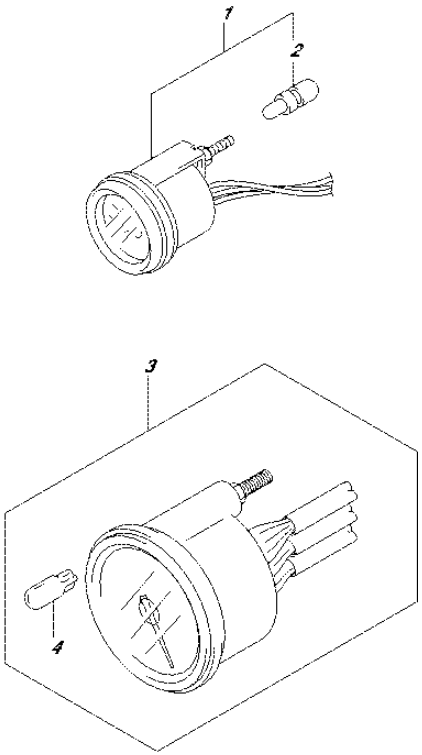

FIG.460F (4-E-7) METER (DF50AVT E01)

REF NO.	PART NO.	DESCRIPTION	Q'TY	REMARKS
1-1	34800-93J00	METER ASSY, TRIM	1	BLACK
1-2	34800-93J11	METER ASSY, TRIM	1	WHITE
2	09471-12108	.BULB (12V,1.7W)	1	
3-1	34200-93J00	TACHOMETER ASSY, WITH MONITOR	1	BLACK
3-2	34200-93J12	TACHOMETER ASSY, WITH MONITOR	1	WHITE
4	09471-12077	.BULB (12V,1.7W)	1	

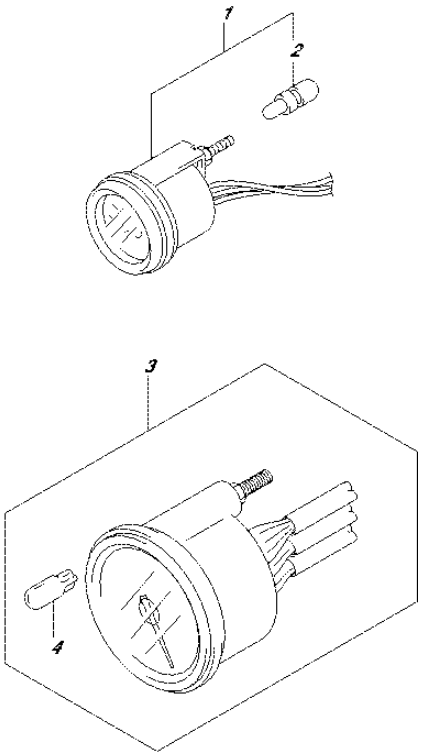

FIG.460G (4-E-8) METER (DF60AVT E01)

REF NO.	PART NO.	DESCRIPTION	Q'TY	REMARKS
1-1	34800-93J00	METER ASSY, TRIM	1	BLACK
1-2	34800-93J11	METER ASSY, TRIM	1	WHITE
2	09471-12108	.BULB (12V,1.7W)	1	
3-1	34200-93J00	TACHOMETER ASSY, WITH MONITOR	1	BLACK
3-2	34200-93J12	TACHOMETER ASSY, WITH MONITOR	1	WHITE
4	09471-12077	.BULB (12V,1.7W)	1	

FIG.460H

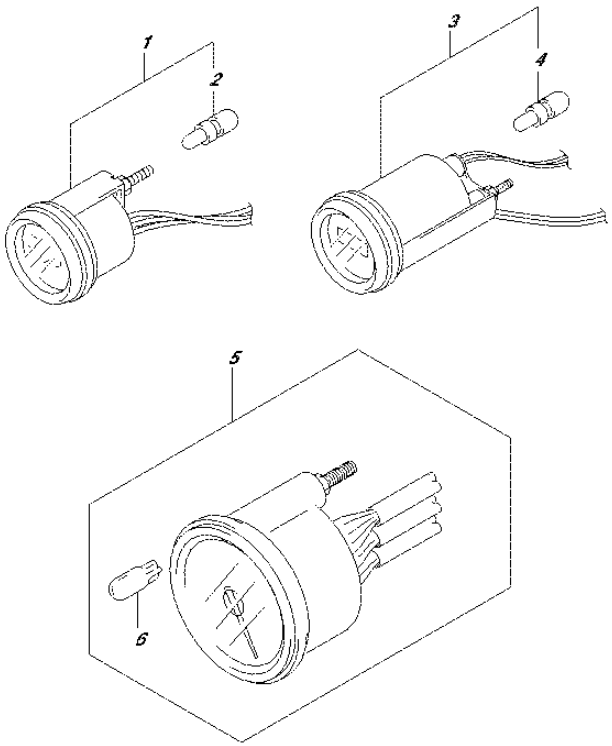

FIG.460H (4-E-9) METER (DF60AVT E40)

REF NO.	PART NO.	DESCRIPTION	Q'TY	REMARKS
1-1	34800-93J00	METER ASSY, TRIM	1	BLACK
1-2	34800-93J11	METER ASSY, TRIM	1	WHITE
2	09471-12108	.BULB (12V,1.7W)	1	
3-1	34500-93J00	METER ASSY, HOUR	1	BLACK
3-2	34500-93J11	METER ASSY, HOUR	1	WHITE
4	09471-12103	.BULB (12V,3W,T6.5)	1	
5-1	34200-93J00	TACHOMETER ASSY, WITH MONITOR	1	BLACK
5-2	34200-93J12	TACHOMETER ASSY, WITH MONITOR	1	WHITE
6	09471-12077	.BULB (12V,1.7W)	1	

FIG.502A

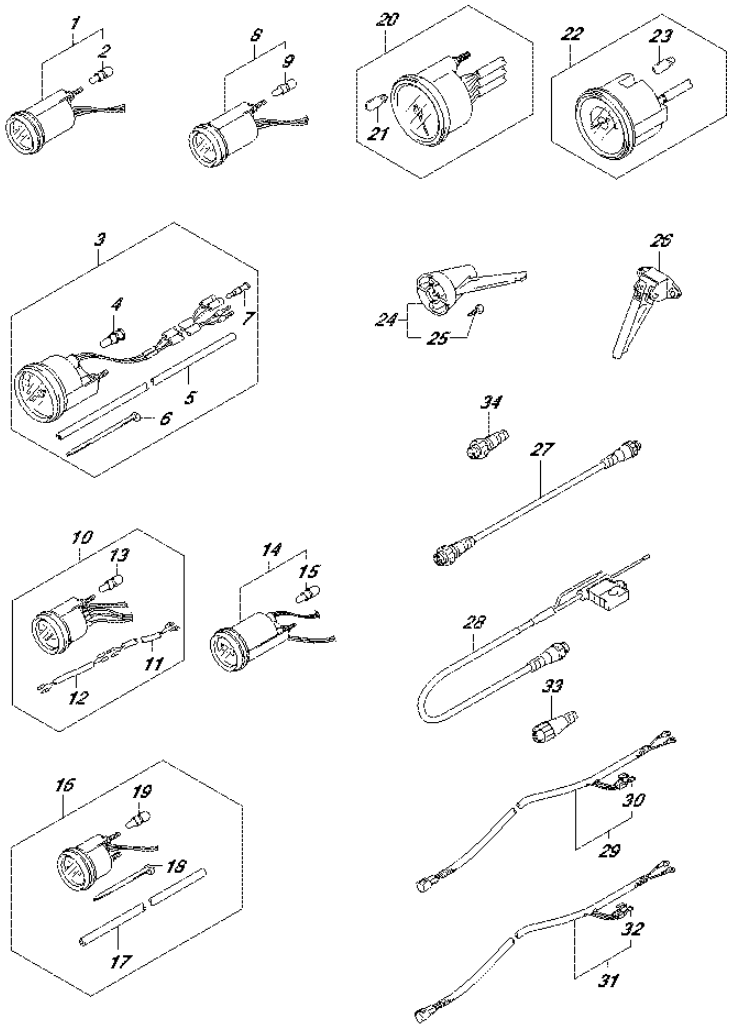

FIG.502A (4-E-10) OPT:METER (1) (DF40A E01)

REF NO.	PART NO.	DESCRIPTION	Q'TY	REMARKS
1-1	34800-93J00	METER ASSY, TRIM	1	BLACK
1-2	34800-93J11	METER ASSY, TRIM	1	WHITE
2	09471-12108	.BULB (12V,1.7W)	1	
3-1	34100-93J00	SPEEDOMETER ASSY	1	MAX 130KM/H BLACK
3-2	34100-93J11	SPEEDOMETER ASSY	1	MAX 130KM/H WHITE
3-3	34100-93J20	SPEEDOMETER ASSY	1	MAX 80KM/H BLACK
3-4	34100-93J31	SPEEDOMETER ASSY	1	MAX 80KM/H WHITE
3-5	34100-93J40	SPEEDOMETER ASSY	1	MAX 45KNOTS BLACK
3-6	34100-93J51	SPEEDOMETER ASSY	1	MAX 45KNOTS WHITE
3-7	34100-93J60	SPEEDOMETER ASSY	1	MAX 65KNOTS WHITE
4	09471-12028	.BULB (12V,3.4W)	1	
5	34191-92E00	.TUBE	1	
6	09407-14407	.CLAMP (L:145)	2	
7	36615-96300	.TERMINAL, RESIN	2	
8-1	34600-93J00	METER ASSY, VOLTAGE	1	BLACK
8-2	34600-93J11	METER ASSY, VOLTAGE	1	WHITE
9	09471-12103	.BULB (12V,3W,T6.5)	1	
10-1	34300-93J00	GAUGE ASSY, FUEL	1	BLACK
10-2	34300-93J11	GAUGE ASSY, FUEL	1	WHITE
11	34310-92E00	.LEAD, FUEL GAUGE	1	
12	34360-92E00	.ADAPTER, FUEL GAUGE	1	
13	09471-12103	.BULB (12V,3W,T6.5)	1	
14-1	34500-93J00	METER ASSY, HOUR	1	BLACK
14-2	34500-93J11	METER ASSY, HOUR	1	WHITE
15	09471-12103	.BULB (12V,3W,T6.5)	1	
16-1	34650-93J20	GAUGE ASSY, WATER PRESSURE	1	15PSI BLACK
16-2	34650-93J31	GAUGE ASSY, WATER PRESSURE	1	15PSI WHITE
17	34191-92E00	.TUBE	1	
18	09407-14407	.CLAMP (L:145)	2	
19	09471-12103	.BULB (12V,3W,T6.5)	1	
20-1	34200-93J00	TACHOMETER ASSY, WITH MONITOR	1	BLACK
20-2	34200-93J12	TACHOMETER ASSY, WITH MONITOR	1	WHITE
21	09471-12077	.BULB (12V,1.7W)	1	

FIG.502A

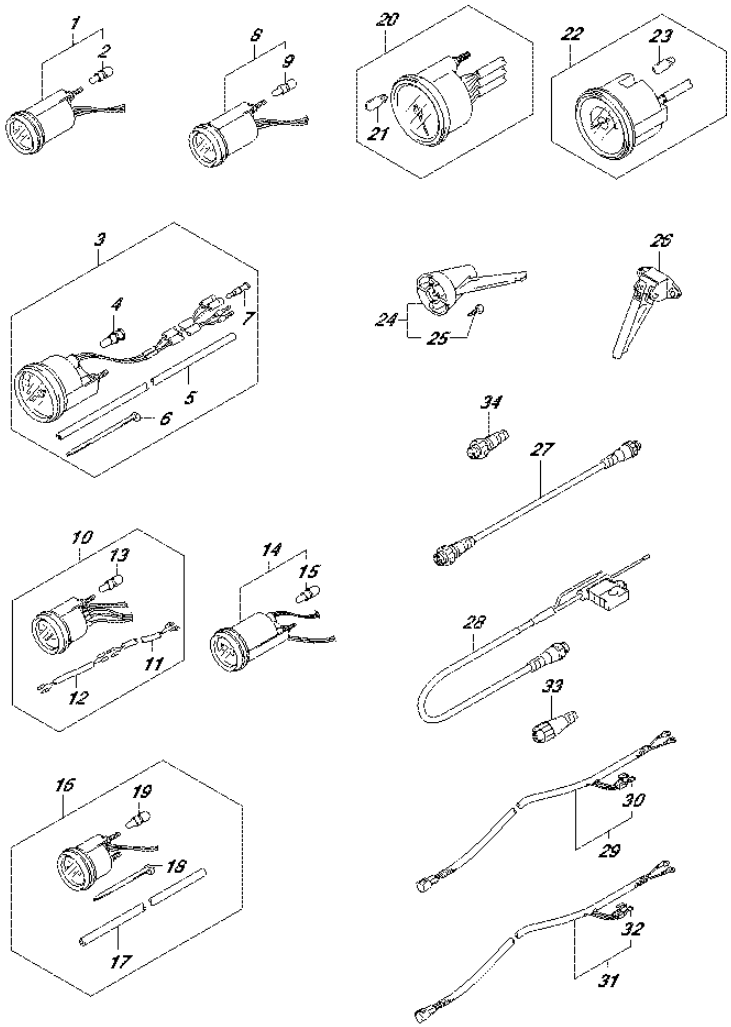

FIG.502A (4-E-11) OPT:METER (1) (DF40A E01)

REF NO.	PART NO.	DESCRIPTION	Q'TY	REMARKS
22-1	34200-93J40	TACHOMETER ASSY, WITH MONITOR	1	BLACK
22-2	34200-93J51	TACHOMETER ASSY, WITH MONITOR	1	WHITE
23	09471-12077	.BULB (12V,1.7W)	1	
24	34190-95500	SENDER ASSY, SPEEDOMETER	1	
25	03112-0630B	.SCREW	2	
26	34190-87D00	SENDER, SPEEDOMETER	1	
27	36662-88L00	WIRE, EXTENSION	1	
28	36663-88L00	HARNESS ASSY, NETWORK POWER	1	
29	36663-98J00	WIRE, GAUGE POWER	1	
30	09481-05501	.FUSE (5A)	1	
31	36663-98J10	WIRE, GAUGE POWER	1	
32	09481-05501	.FUSE (5A)	1	
33	36665-88L00	UNIT, RESISTOR FEMALE	1	
34	36665-88L10	UNIT, RESISTOR MALE	1	

FIG.502B

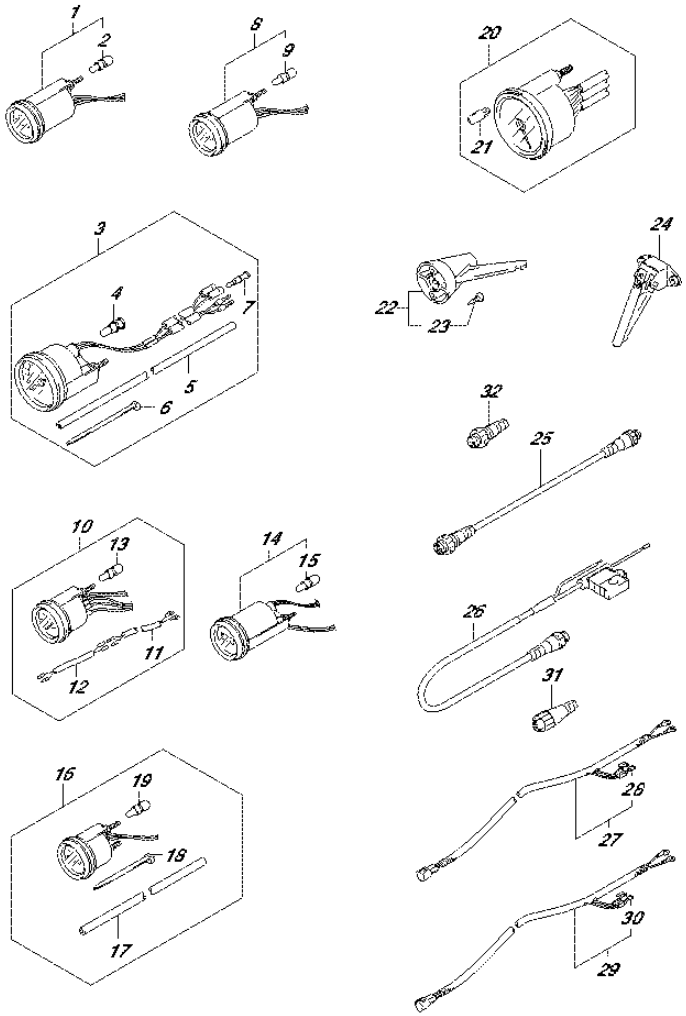

FIG.502B (4-E-12) OPT:METER (1) (DF40AQH E01)

REF NO.	PART NO.	DESCRIPTION	Q'TY	REMARKS
1-1	34800-93J00	METER ASSY, TRIM	1	BLACK
1-2	34800-93J11	METER ASSY, TRIM	1	WHITE
2	09471-12108	.BULB (12V,1.7W)	1	
3-1	34100-93J00	SPEEDOMETER ASSY	1	MAX 130KM/H BLACK
3-2	34100-93J11	SPEEDOMETER ASSY	1	MAX 130KM/H WHITE
3-3	34100-93J20	SPEEDOMETER ASSY	1	MAX 80KM/H BLACK
3-4	34100-93J31	SPEEDOMETER ASSY	1	MAX 80KM/H WHITE
3-5	34100-93J40	SPEEDOMETER ASSY	1	MAX 45KNOTS BLACK
3-6	34100-93J51	SPEEDOMETER ASSY	1	MAX 45KNOTS WHITE
3-7	34100-93J60	SPEEDOMETER ASSY	1	MAX 65KNOTS WHITE
4	09471-12028	.BULB (12V,3.4W)	1	
5	34191-92E00	.TUBE	1	
6	09407-14407	.CLAMP (L:145)	2	
7	36615-96300	.TERMINAL, RESIN	2	
8-1	34600-93J00	METER ASSY, VOLTAGE	1	BLACK
8-2	34600-93J11	METER ASSY, VOLTAGE	1	WHITE
9	09471-12103	.BULB (12V,3W,T6.5)	1	
10-1	34300-93J00	GAUGE ASSY, FUEL	1	BLACK
10-2	34300-93J11	GAUGE ASSY, FUEL	1	WHITE
11	34310-92E00	.LEAD, FUEL GAUGE	1	
12	34360-92E00	.ADAPTER, FUEL GAUGE	1	
13	09471-12103	.BULB (12V,3W,T6.5)	1	
14-1	34500-93J00	METER ASSY, HOUR	1	BLACK
14-2	34500-93J11	METER ASSY, HOUR	1	WHITE
15	09471-12103	.BULB (12V,3W,T6.5)	1	
16-1	34650-93J20	GAUGE ASSY, WATER PRESSURE	1	15PSI BLACK
16-2	34650-93J31	GAUGE ASSY, WATER PRESSURE	1	15PSI WHITE
17	34191-92E00	.TUBE	1	
18	09407-14407	.CLAMP (L:145)	2	
19	09471-12103	.BULB (12V,3W,T6.5)	1	
20-1	34200-93J00	TACHOMETER ASSY, WITH MONITOR	1	BLACK
20-2	34200-93J12	TACHOMETER ASSY, WITH MONITOR	1	WHITE
21	09471-12077	.BULB (12V,1.7W)	1	

FIG.502B

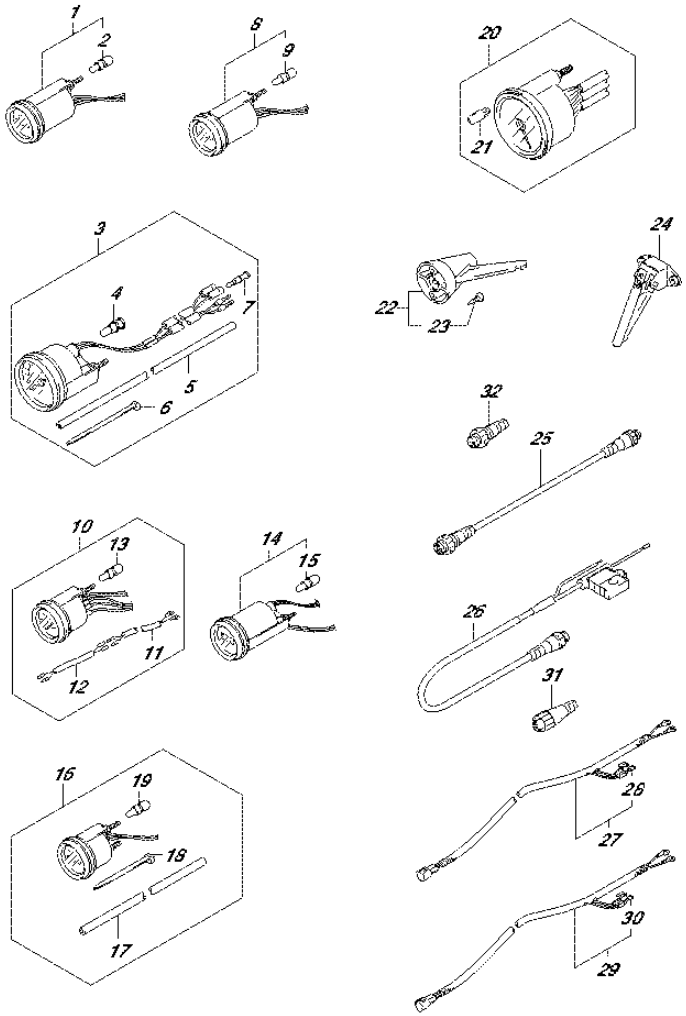

FIG.502B (4-E-13) OPT:METER (1) (DF40AQH E01)

REF NO.	PART NO.	DESCRIPTION	Q'TY	REMARKS
22	34190-95500	SENDER ASSY, SPEEDOMETER	1	
23	03112-0630B	.SCREW	2	
24	34190-87D00	SENDER, SPEEDOMETER	1	
25	36662-88L00	WIRE, EXTENSION	1	
26	36663-88L00	HARNESS ASSY, NETWORK POWER	1	
27	36663-98J00	WIRE, GAUGE POWER (2.5M)	1	
28	09481-05501	.FUSE (5A)	1	
29	36663-98J10	WIRE, GAUGE POWER (6.0M)	1	
30	09481-05501	.FUSE (5A)	1	
31	36665-88L00	UNIT, RESISTOR FEMALE	1	
32	36665-88L10	UNIT, RESISTOR MALE	1	

FIG.502C

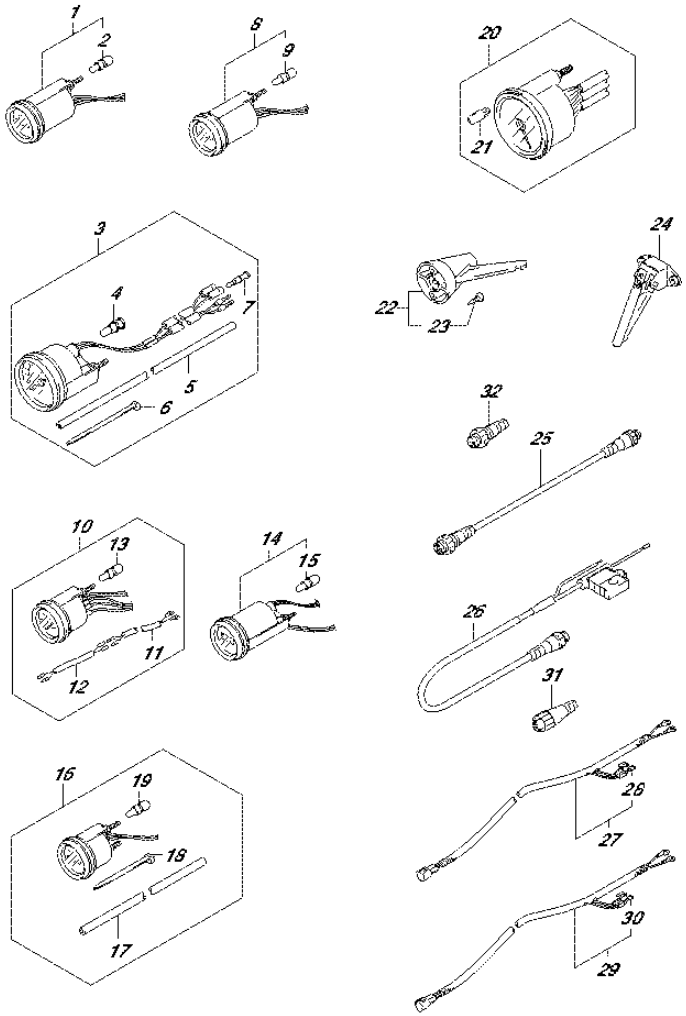

FIG.502C (4-E-14) OPT:METER (1) (DF40ATH E01)

REF NO.	PART NO.	DESCRIPTION	Q'TY	REMARKS
1-1	34800-93J00	METER ASSY, TRIM	1	BLACK
1-2	34800-93J11	METER ASSY, TRIM	1	WHITE
2	09471-12108	.BULB (12V,1.7W)	1	
3-1	34100-93J00	SPEEDOMETER ASSY	1	MAX 130KM/H BLACK
3-2	34100-93J11	SPEEDOMETER ASSY	1	MAX 130KM/H WHITE
3-3	34100-93J20	SPEEDOMETER ASSY	1	MAX 80KM/H BLACK
3-4	34100-93J31	SPEEDOMETER ASSY	1	MAX 80KM/H WHITE
3-5	34100-93J40	SPEEDOMETER ASSY	1	MAX 45KNOTS BLACK
3-6	34100-93J51	SPEEDOMETER ASSY	1	MAX 45KNOTS WHITE
3-7	34100-93J60	SPEEDOMETER ASSY	1	MAX 65KNOTS WHITE
4	09471-12028	.BULB (12V,3.4W)	1	
5	34191-92E00	.TUBE	1	
6	09407-14407	.CLAMP (L:145)	2	
7	36615-96300	.TERMINAL, RESIN	2	
8-1	34600-93J00	METER ASSY, VOLTAGE	1	BLACK
8-2	34600-93J11	METER ASSY, VOLTAGE	1	WHITE
9	09471-12103	.BULB (12V,3W,T6.5)	1	
10-1	34300-93J00	GAUGE ASSY, FUEL	1	BLACK
10-2	34300-93J11	GAUGE ASSY, FUEL	1	WHITE
11	34310-92E00	.LEAD, FUEL GAUGE	1	
12	34360-92E00	.ADAPTER, FUEL GAUGE	1	
13	09471-12103	.BULB (12V,3W,T6.5)	1	
14-1	34500-93J00	METER ASSY, HOUR	1	BLACK
14-2	34500-93J11	METER ASSY, HOUR	1	WHITE
15	09471-12103	.BULB (12V,3W,T6.5)	1	
16-1	34650-93J20	GAUGE ASSY, WATER PRESSURE	1	15PSI BLACK
16-2	34650-93J31	GAUGE ASSY, WATER PRESSURE	1	15PSI WHITE
17	34191-92E00	.TUBE	1	
18	09407-14407	.CLAMP (L:145)	2	
19	09471-12103	.BULB (12V,3W,T6.5)	1	
20-1	34200-93J00	TACHOMETER ASSY, WITH MONITOR	1	BLACK
20-2	34200-93J12	TACHOMETER ASSY, WITH MONITOR	1	WHITE
21	09471-12077	.BULB (12V,1.7W)	1	

FIG.502C

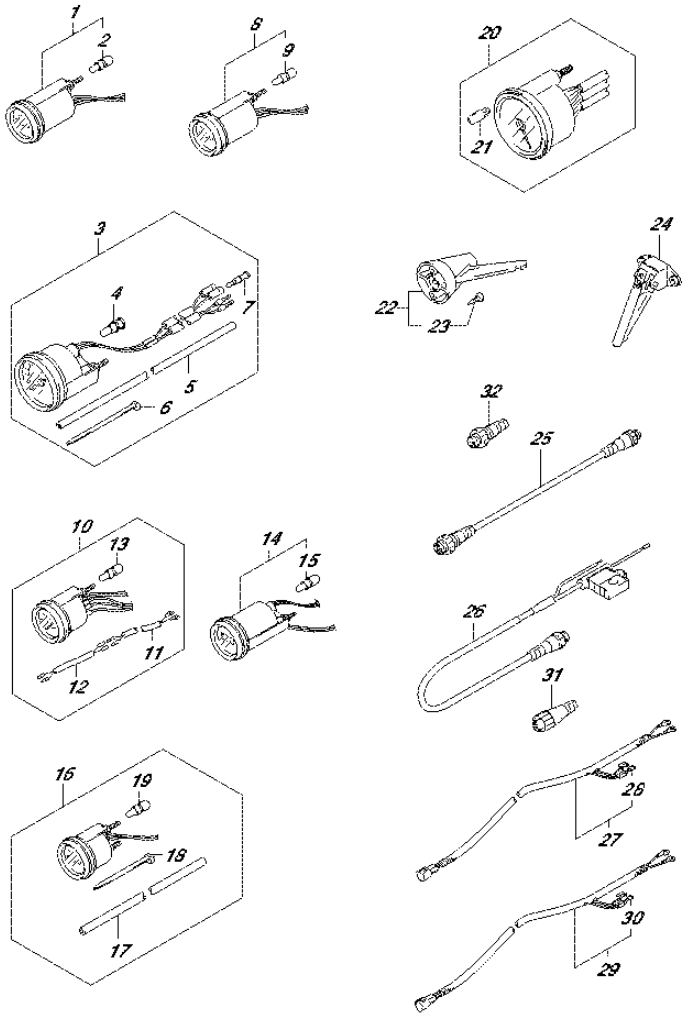

FIG.502C (4-E-15) OPT:METER (1) (DF40ATH E01)

REF NO.	PART NO.	DESCRIPTION	Q'TY	REMARKS
22	34190-95500	SENDER ASSY, SPEEDOMETER	1	
23	03112-0630B	.SCREW	2	
24	34190-87D00	SENDER, SPEEDOMETER	1	
25	36662-88L00	WIRE, EXTENSION	1	
26	36663-88L00	HARNESS ASSY, NETWORK POWER	1	
27	36663-98J00	WIRE, GAUGE POWER (2.5M)	1	
28	09481-05501	.FUSE (5A)	1	
29	36663-98J10	WIRE, GAUGE POWER (6.0M)	1	
30	09481-05501	.FUSE (5A)	1	
31	36665-88L00	UNIT, RESISTOR FEMALE	1	
32	36665-88L10	UNIT, RESISTOR MALE	1	

FIG.502D

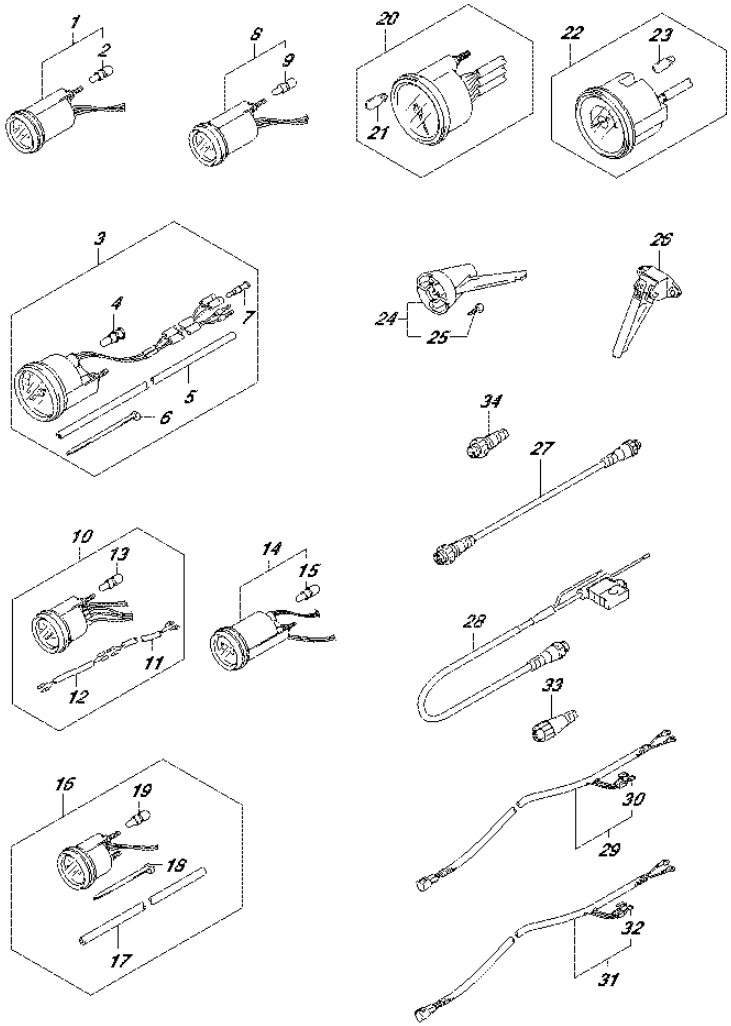

FIG.502D (4-F-2) OPT:METER (1) (DF40AST E34)

REF NO.	PART NO.	DESCRIPTION	Q'TY	REMARKS
1-1	34800-93J00	METER ASSY, TRIM	1	BLACK
1-2	34800-93J11	METER ASSY, TRIM	1	WHITE
2	09471-12108	.BULB (12V,1.7W)	1	
3-1	34100-93J00	SPEEDOMETER ASSY	1	MAX 130KM/H BLACK
3-2	34100-93J11	SPEEDOMETER ASSY	1	MAX 130KM/H WHITE
3-3	34100-93J20	SPEEDOMETER ASSY	1	MAX 80KM/H BLACK
3-4	34100-93J31	SPEEDOMETER ASSY	1	MAX 80KM/H WHITE
3-5	34100-93J40	SPEEDOMETER ASSY	1	MAX 45KNOTS BLACK
3-6	34100-93J51	SPEEDOMETER ASSY	1	MAX 45KNOTS WHITE
3-7	34100-93J60	SPEEDOMETER ASSY	1	MAX 65KNOTS WHITE
4	09471-12028	.BULB (12V,3.4W)	1	
5	34191-92E00	.TUBE	1	
6	09407-14407	.CLAMP (L:145)	2	
7	36615-96300	.TERMINAL, RESIN	2	
8-1	34600-93J00	METER ASSY, VOLTAGE	1	BLACK
8-2	34600-93J11	METER ASSY, VOLTAGE	1	WHITE
9	09471-12103	.BULB (12V,3W,T6.5)	1	
10-1	34300-93J00	GAUGE ASSY, FUEL	1	BLACK
10-2	34300-93J11	GAUGE ASSY, FUEL	1	WHITE
11	34310-92E00	.LEAD, FUEL GAUGE	1	
12	34360-92E00	.ADAPTER, FUEL GAUGE	1	
13	09471-12103	.BULB (12V,3W,T6.5)	1	
14-1	34500-93J00	METER ASSY, HOUR	1	BLACK
14-2	34500-93J11	METER ASSY, HOUR	1	WHITE
15	09471-12103	.BULB (12V,3W,T6.5)	1	
16-1	34650-93J20	GAUGE ASSY, WATER PRESSURE	1	15PSI BLACK
16-2	34650-93J31	GAUGE ASSY, WATER PRESSURE	1	15PSI WHITE
17	34191-92E00	.TUBE	1	
18	09407-14407	.CLAMP (L:145)	2	
19	09471-12103	.BULB (12V,3W,T6.5)	1	
20-1	34200-93J00	TACHOMETER ASSY, WITH MONITOR	1	BLACK
20-2	34200-93J12	TACHOMETER ASSY, WITH MONITOR	1	WHITE
21	09471-12077	.BULB (12V,1.7W)	1	

FIG.502D

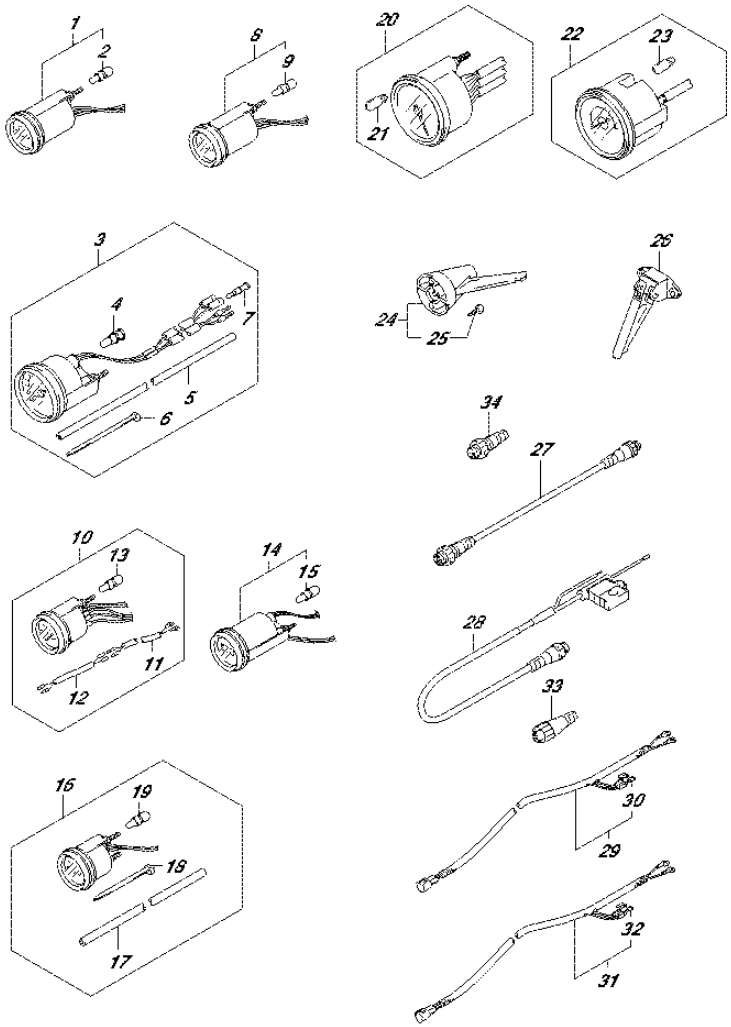

FIG.502D (4-F-3) OPT:METER (1) (DF40AST E34)

REF NO.	PART NO.	DESCRIPTION	Q'TY	REMARKS
22-1	34200-93J40	TACHOMETER ASSY, WITH MONITOR	1	BLACK
22-2	34200-93J51	TACHOMETER ASSY, WITH MONITOR	1	WHITE
23	09471-12077	.BULB (12V,1.7W)	1	
24	34190-95500	SENDER ASSY, SPEEDOMETER	1	
25	03112-0630B	.SCREW	2	
26	34190-87D00	SENDER, SPEEDOMETER	1	
27	36662-88L00	WIRE, EXTENSION	1	
28	36663-88L00	HARNESS ASSY, NETWORK POWER	1	
29	36663-98J00	WIRE, GAUGE POWER	1	
30	09481-05501	.FUSE (5A)	1	
31	36663-98J10	WIRE, GAUGE POWER	1	
32	09481-05501	.FUSE (5A)	1	
33	36665-88L00	UNIT, RESISTOR FEMALE	1	
34	36665-88L10	UNIT, RESISTOR MALE	1	

FIG.502E

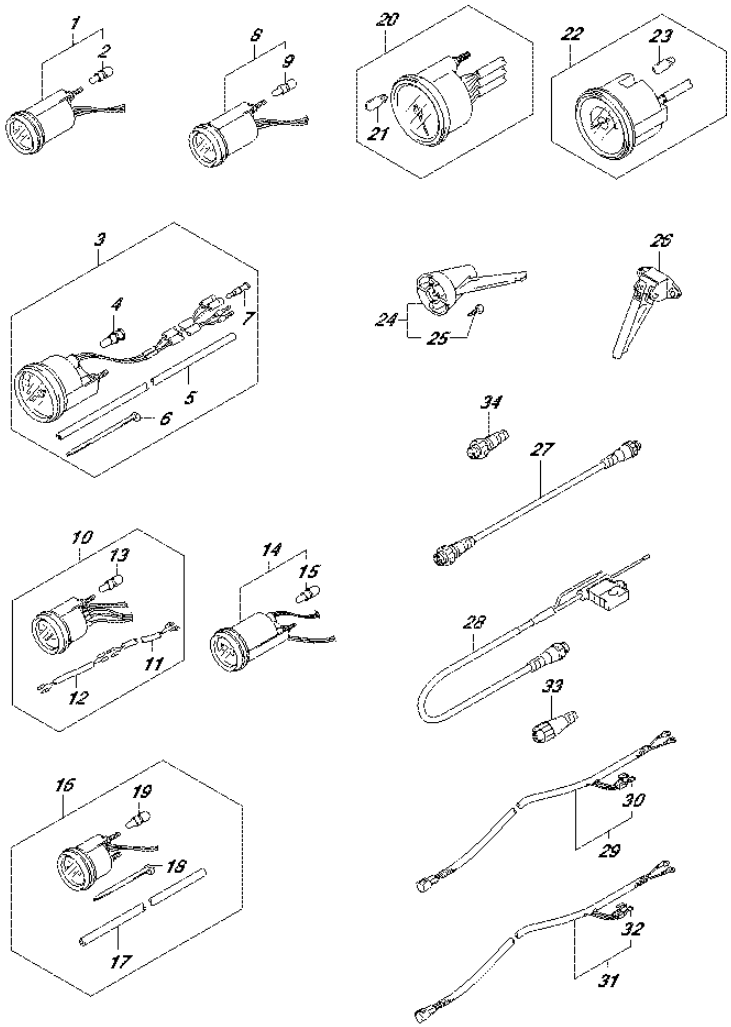

FIG.502E (4-F-4) OPT:METER (1) (DF50A E01)

REF NO.	PART NO.	DESCRIPTION	Q'TY	REMARKS
1-1	34800-93J00	METER ASSY, TRIM	1	BLACK
1-2	34800-93J11	METER ASSY, TRIM	1	WHITE
2	09471-12108	.BULB (12V,1.7W)	1	
3-1	34100-93J00	SPEEDOMETER ASSY	1	MAX 130KM/H BLACK
3-2	34100-93J11	SPEEDOMETER ASSY	1	MAX 130KM/H WHITE
3-3	34100-93J20	SPEEDOMETER ASSY	1	MAX 80KM/H BLACK
3-4	34100-93J31	SPEEDOMETER ASSY	1	MAX 80KM/H WHITE
3-5	34100-93J40	SPEEDOMETER ASSY	1	MAX 45KNOTS BLACK
3-6	34100-93J51	SPEEDOMETER ASSY	1	MAX 45KNOTS WHITE
3-7	34100-93J60	SPEEDOMETER ASSY	1	MAX 65KNOTS WHITE
4	09471-12028	.BULB (12V,3.4W)	1	
5	34191-92E00	.TUBE	1	
6	09407-14407	.CLAMP (L:145)	2	
7	36615-96300	.TERMINAL, RESIN	2	
8-1	34600-93J00	METER ASSY, VOLTAGE	1	BLACK
8-2	34600-93J11	METER ASSY, VOLTAGE	1	WHITE
9	09471-12103	.BULB (12V,3W,T6.5)	1	
10-1	34300-93J00	GAUGE ASSY, FUEL	1	BLACK
10-2	34300-93J11	GAUGE ASSY, FUEL	1	WHITE
11	34310-92E00	.LEAD, FUEL GAUGE	1	
12	34360-92E00	.ADAPTER, FUEL GAUGE	1	
13	09471-12103	.BULB (12V,3W,T6.5)	1	
14-1	34500-93J00	METER ASSY, HOUR	1	BLACK
14-2	34500-93J11	METER ASSY, HOUR	1	WHITE
15	09471-12103	.BULB (12V,3W,T6.5)	1	
16-1	34650-93J20	GAUGE ASSY, WATER PRESSURE	1	15PSI BLACK
16-2	34650-93J31	GAUGE ASSY, WATER PRESSURE	1	15PSI WHITE
17	34191-92E00	.TUBE	1	
18	09407-14407	.CLAMP (L:145)	2	
19	09471-12103	.BULB (12V,3W,T6.5)	1	
20-1	34200-93J00	TACHOMETER ASSY, WITH MONITOR	1	BLACK
20-2	34200-93J12	TACHOMETER ASSY, WITH MONITOR	1	WHITE
21	09471-12077	.BULB (12V,1.7W)	1	

FIG.502E

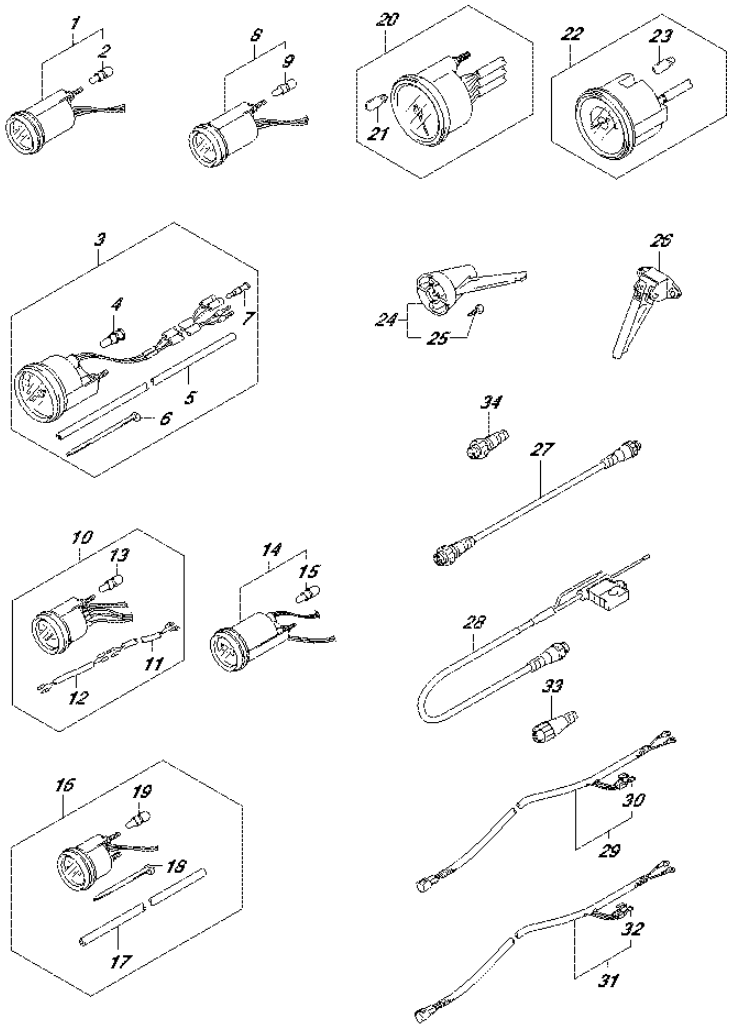

FIG.502E (4-F-5) OPT:METER (1) (DF50A E01)

REF NO.	PART NO.	DESCRIPTION	Q'TY	REMARKS
22-1	34200-93J40	TACHOMETER ASSY, WITH MONITOR	1	BLACK
22-2	34200-93J51	TACHOMETER ASSY, WITH MONITOR	1	WHITE
23	09471-12077	.BULB (12V,1.7W)	1	
24	34190-95500	SENDER ASSY, SPEEDOMETER	1	
25	03112-0630B	.SCREW	2	
26	34190-87D00	SENDER, SPEEDOMETER	1	
27	36662-88L00	WIRE, EXTENSION	1	
28	36663-88L00	HARNESS ASSY, NETWORK POWER	1	
29	36663-98J00	WIRE, GAUGE POWER	1	
30	09481-05501	.FUSE (5A)	1	
31	36663-98J10	WIRE, GAUGE POWER	1	
32	09481-05501	.FUSE (5A)	1	
33	36665-88L00	UNIT, RESISTOR FEMALE	1	
34	36665-88L10	UNIT, RESISTOR MALE	1	

FIG.502F

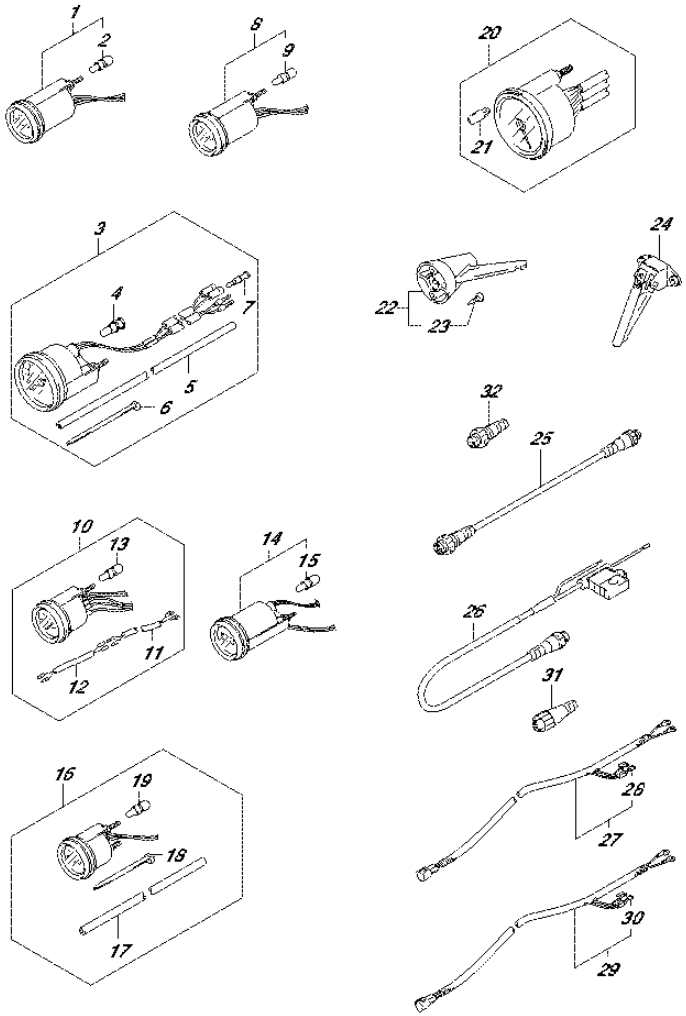

FIG.502F (4-F-6) OPT:METER (1) (DF50ATH E01)

REF NO.	PART NO.	DESCRIPTION	Q'TY	REMARKS
1-1	34800-93J00	METER ASSY, TRIM	1	BLACK
1-2	34800-93J11	METER ASSY, TRIM	1	WHITE
2	09471-12108	.BULB (12V,1.7W)	1	
3-1	34100-93J00	SPEEDOMETER ASSY	1	MAX 130KM/H BLACK
3-2	34100-93J11	SPEEDOMETER ASSY	1	MAX 130KM/H WHITE
3-3	34100-93J20	SPEEDOMETER ASSY	1	MAX 80KM/H BLACK
3-4	34100-93J31	SPEEDOMETER ASSY	1	MAX 80KM/H WHITE
3-5	34100-93J40	SPEEDOMETER ASSY	1	MAX 45KNOTS BLACK
3-6	34100-93J51	SPEEDOMETER ASSY	1	MAX 45KNOTS WHITE
3-7	34100-93J60	SPEEDOMETER ASSY	1	MAX 65KNOTS WHITE
4	09471-12028	.BULB (12V,3.4W)	1	
5	34191-92E00	.TUBE	1	
6	09407-14407	.CLAMP (L:145)	2	
7	36615-96300	.TERMINAL, RESIN	2	
8-1	34600-93J00	METER ASSY, VOLTAGE	1	BLACK
8-2	34600-93J11	METER ASSY, VOLTAGE	1	WHITE
9	09471-12103	.BULB (12V,3W,T6.5)	1	
10-1	34300-93J00	GAUGE ASSY, FUEL	1	BLACK
10-2	34300-93J11	GAUGE ASSY, FUEL	1	WHITE
11	34310-92E00	.LEAD, FUEL GAUGE	1	
12	34360-92E00	.ADAPTER, FUEL GAUGE	1	
13	09471-12103	.BULB (12V,3W,T6.5)	1	
14-1	34500-93J00	METER ASSY, HOUR	1	BLACK
14-2	34500-93J11	METER ASSY, HOUR	1	WHITE
15	09471-12103	.BULB (12V,3W,T6.5)	1	
16-1	34650-93J20	GAUGE ASSY, WATER PRESSURE	1	15PSI BLACK
16-2	34650-93J31	GAUGE ASSY, WATER PRESSURE	1	15PSI WHITE
17	34191-92E00	.TUBE	1	
18	09407-14407	.CLAMP (L:145)	2	
19	09471-12103	.BULB (12V,3W,T6.5)	1	
20-1	34200-93J00	TACHOMETER ASSY, WITH MONITOR	1	BLACK
20-2	34200-93J12	TACHOMETER ASSY, WITH MONITOR	1	WHITE
21	09471-12077	.BULB (12V,1.7W)	1	

FIG.502F

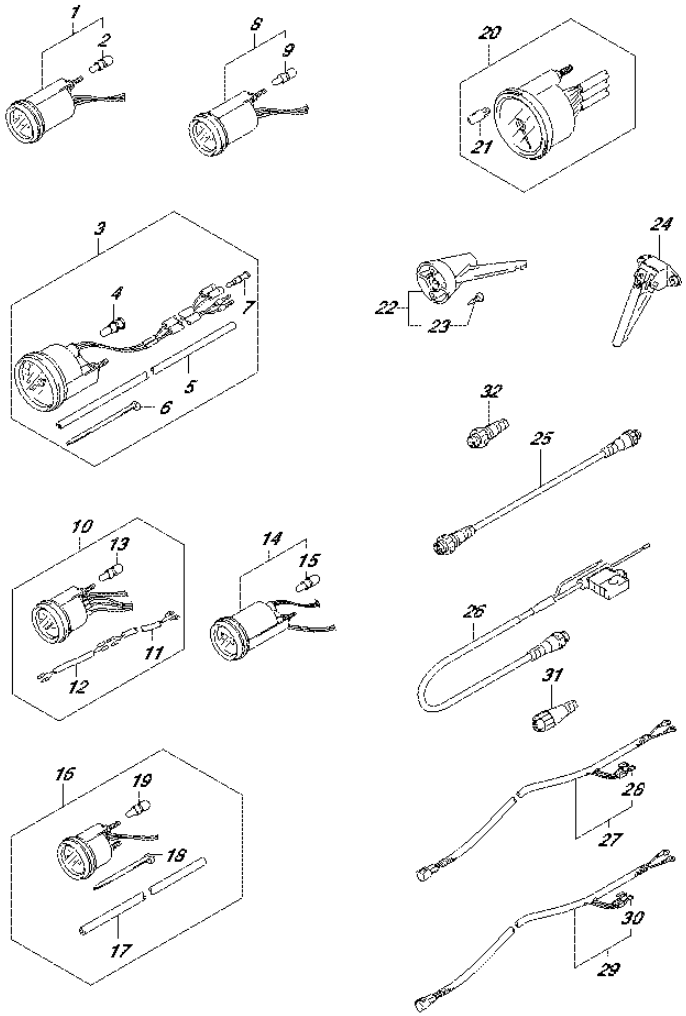

FIG.502F (4-F-7) OPT:METER (1) (DF50ATH E01)

REF NO.	PART NO.	DESCRIPTION	Q'TY	REMARKS
22	34190-95500	SENDER ASSY, SPEEDOMETER	1	
23	03112-0630B	.SCREW	2	
24	34190-87D00	SENDER, SPEEDOMETER	1	
25	36662-88L00	WIRE, EXTENSION	1	
26	36663-88L00	HARNESS ASSY, NETWORK POWER	1	
27	36663-98J00	WIRE, GAUGE POWER (2.5M)	1	
28	09481-05501	.FUSE (5A)	1	
29	36663-98J10	WIRE, GAUGE POWER (6.0M)	1	
30	09481-05501	.FUSE (5A)	1	
31	36665-88L00	UNIT, RESISTOR FEMALE	1	
32	36665-88L10	UNIT, RESISTOR MALE	1	

FIG.502G

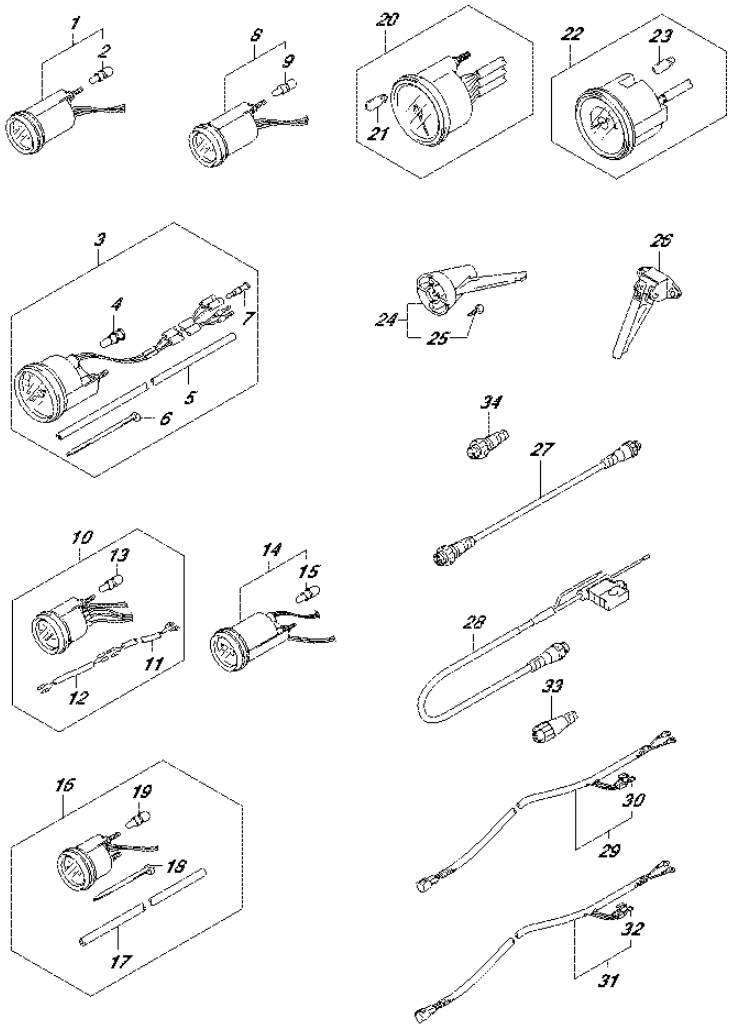

FIG.502G (4-F-8) OPT:METER (1) (DF60A E01)

REF NO.	PART NO.	DESCRIPTION	Q'TY	REMARKS
1-1	34800-93J00	METER ASSY, TRIM	1	BLACK
1-2	34800-93J11	METER ASSY, TRIM	1	WHITE
2	09471-12108	.BULB (12V,1.7W)	1	
3-1	34100-93J00	SPEEDOMETER ASSY	1	MAX 130KM/H BLACK
3-2	34100-93J11	SPEEDOMETER ASSY	1	MAX 130KM/H WHITE
3-3	34100-93J20	SPEEDOMETER ASSY	1	MAX 80KM/H BLACK
3-4	34100-93J31	SPEEDOMETER ASSY	1	MAX 80KM/H WHITE
3-5	34100-93J40	SPEEDOMETER ASSY	1	MAX 45KNOTS BLACK
3-6	34100-93J51	SPEEDOMETER ASSY	1	MAX 45KNOTS WHITE
3-7	34100-93J60	SPEEDOMETER ASSY	1	MAX 65KNOTS WHITE
4	09471-12028	.BULB (12V,3.4W)	1	
5	34191-92E00	.TUBE	1	
6	09407-14407	.CLAMP (L:145)	2	
7	36615-96300	.TERMINAL, RESIN	2	
8-1	34600-93J00	METER ASSY, VOLTAGE	1	BLACK
8-2	34600-93J11	METER ASSY, VOLTAGE	1	WHITE
9	09471-12103	.BULB (12V,3W,T6.5)	1	
10-1	34300-93J00	GAUGE ASSY, FUEL	1	BLACK
10-2	34300-93J11	GAUGE ASSY, FUEL	1	WHITE
11	34310-92E00	.LEAD, FUEL GAUGE	1	
12	34360-92E00	.ADAPTER, FUEL GAUGE	1	
13	09471-12103	.BULB (12V,3W,T6.5)	1	
14-1	34500-93J00	METER ASSY, HOUR	1	BLACK
14-2	34500-93J11	METER ASSY, HOUR	1	WHITE
15	09471-12103	.BULB (12V,3W,T6.5)	1	
16-1	34650-93J20	GAUGE ASSY, WATER PRESSURE	1	15PSI BLACK
16-2	34650-93J31	GAUGE ASSY, WATER PRESSURE	1	15PSI WHITE
17	34191-92E00	.TUBE	1	
18	09407-14407	.CLAMP (L:145)	2	
19	09471-12103	.BULB (12V,3W,T6.5)	1	
20-1	34200-93J00	TACHOMETER ASSY, WITH MONITOR	1	BLACK
20-2	34200-93J12	TACHOMETER ASSY, WITH MONITOR	1	WHITE
21	09471-12077	.BULB (12V,1.7W)	1	

FIG.502G

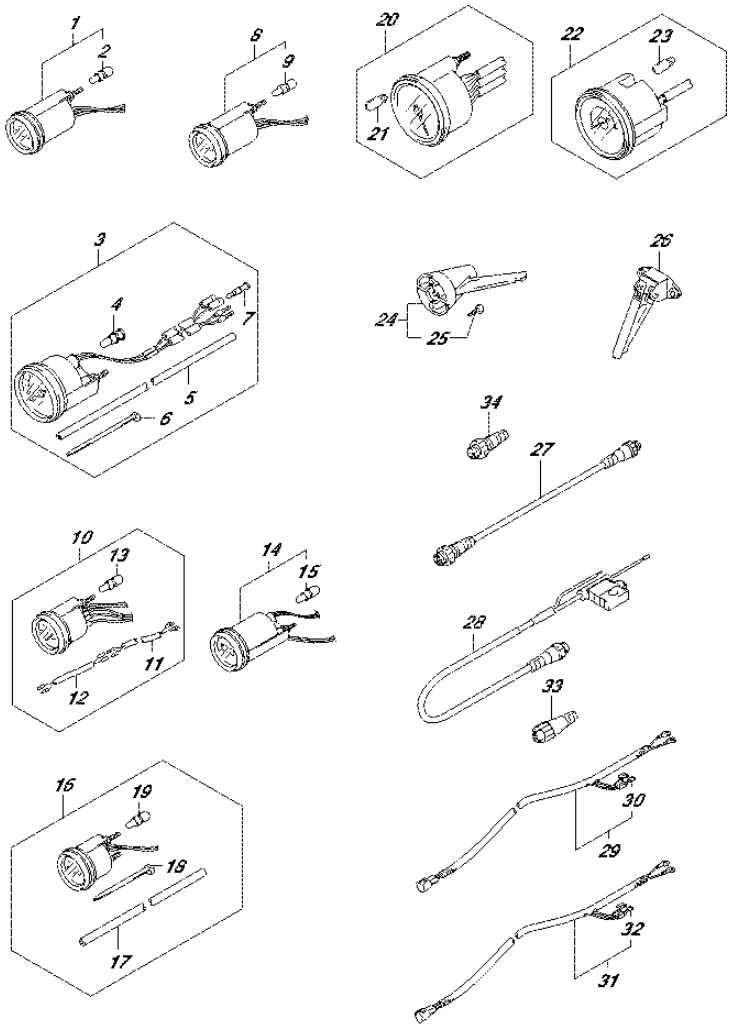

FIG.502G (4-F-9) OPT:METER (1) (DF60A E01)

REF NO.	PART NO.	DESCRIPTION	Q'TY	REMARKS
22-1	34200-93J40	TACHOMETER ASSY, WITH MONITOR	1	BLACK
22-2	34200-93J51	TACHOMETER ASSY, WITH MONITOR	1	WHITE
23	09471-12077	.BULB (12V,1.7W)	1	
24	34190-95500	SENDER ASSY, SPEEDOMETER	1	
25	03112-0630B	.SCREW	2	
26	34190-87D00	SENDER, SPEEDOMETER	1	
27	36662-88L00	WIRE, EXTENSION	1	
28	36663-88L00	HARNESS ASSY, NETWORK POWER	1	
29	36663-98J00	WIRE, GAUGE POWER	1	
30	09481-05501	.FUSE (5A)	1	
31	36663-98J10	WIRE, GAUGE POWER	1	
32	09481-05501	.FUSE (5A)	1	
33	36665-88L00	UNIT, RESISTOR FEMALE	1	
34	36665-88L10	UNIT, RESISTOR MALE	1	

FIG.502H

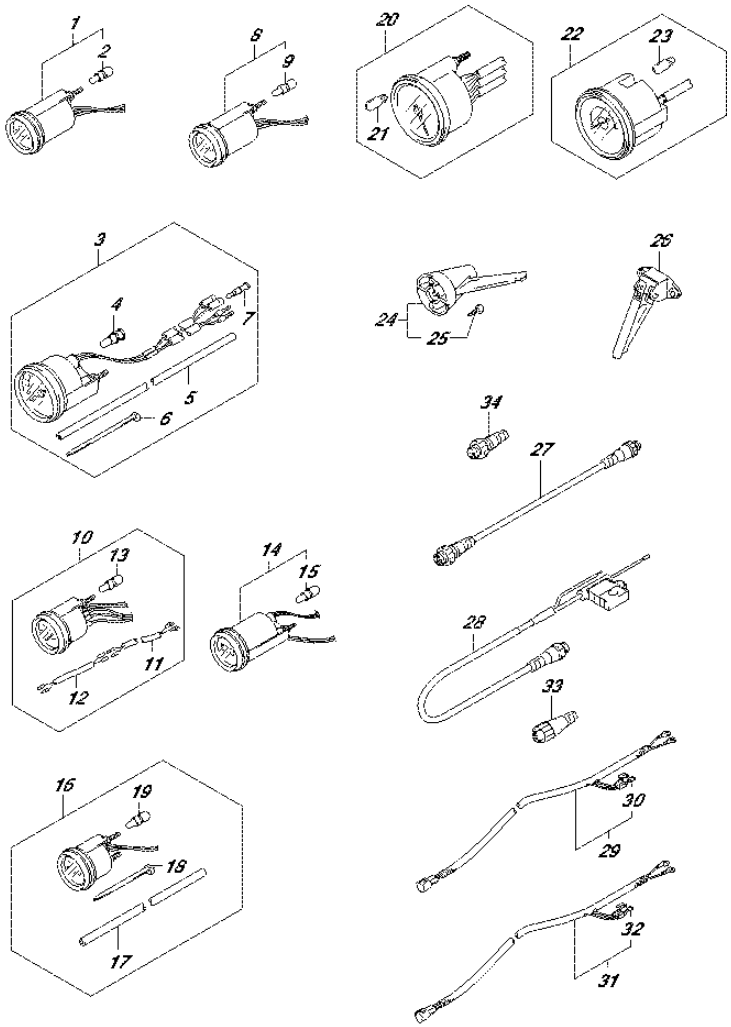

FIG.502H (4-F-10) OPT:METER (1) (DF60A E40)

REF NO.	PART NO.	DESCRIPTION	Q'TY	REMARKS
1-1	34800-93J00	METER ASSY, TRIM	1	BLACK
1-2	34800-93J11	METER ASSY, TRIM	1	WHITE
2	09471-12108	.BULB (12V,1.7W)	1	
3-1	34100-93J00	SPEEDOMETER ASSY	1	MAX 130KM/H BLACK
3-2	34100-93J11	SPEEDOMETER ASSY	1	MAX 130KM/H WHITE
3-3	34100-93J20	SPEEDOMETER ASSY	1	MAX 80KM/H BLACK
3-4	34100-93J31	SPEEDOMETER ASSY	1	MAX 80KM/H WHITE
3-5	34100-93J40	SPEEDOMETER ASSY	1	MAX 45KNOTS BLACK
3-6	34100-93J51	SPEEDOMETER ASSY	1	MAX 45KNOTS WHITE
3-7	34100-93J60	SPEEDOMETER ASSY	1	MAX 65KNOTS WHITE
4	09471-12028	.BULB (12V,3.4W)	1	
5	34191-92E00	.TUBE	1	
6	09407-14407	.CLAMP (L:145)	2	
7	36615-96300	.TERMINAL, RESIN	2	
8-1	34600-93J00	METER ASSY, VOLTAGE	1	BLACK
8-2	34600-93J11	METER ASSY, VOLTAGE	1	WHITE
9	09471-12103	.BULB (12V,3W,T6.5)	1	
10-1	34300-93J00	GAUGE ASSY, FUEL	1	BLACK
10-2	34300-93J11	GAUGE ASSY, FUEL	1	WHITE
11	34310-92E00	.LEAD, FUEL GAUGE	1	
12	34360-92E00	.ADAPTER, FUEL GAUGE	1	
13	09471-12103	.BULB (12V,3W,T6.5)	1	
14-1	34500-93J00	METER ASSY, HOUR	1	BLACK
14-2	34500-93J11	METER ASSY, HOUR	1	WHITE
15	09471-12103	.BULB (12V,3W,T6.5)	1	
16-1	34650-93J20	GAUGE ASSY, WATER PRESSURE	1	15PSI BLACK
16-2	34650-93J31	GAUGE ASSY, WATER PRESSURE	1	15PSI WHITE
17	34191-92E00	.TUBE	1	
18	09407-14407	.CLAMP (L:145)	2	
19	09471-12103	.BULB (12V,3W,T6.5)	1	
20-1	34200-93J00	TACHOMETER ASSY, WITH MONITOR	1	BLACK
20-2	34200-93J12	TACHOMETER ASSY, WITH MONITOR	1	WHITE
21	09471-12077	.BULB (12V,1.7W)	1	

FIG.502H

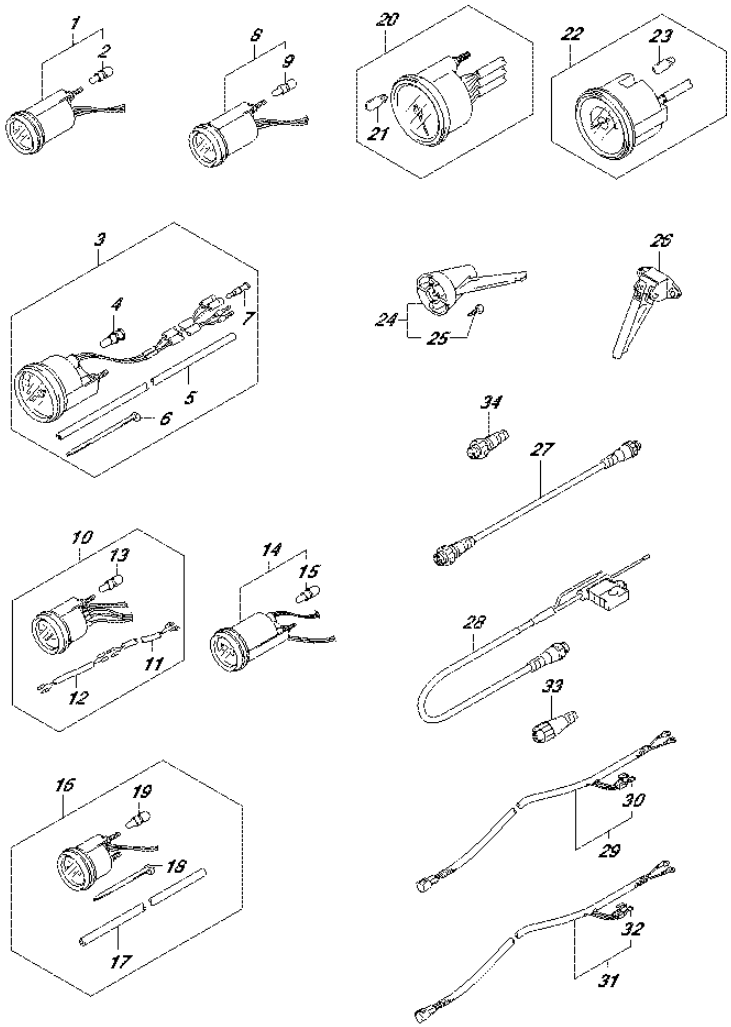

FIG.502H (4-F-11) OPT:METER (1) (DF60A E40)

REF NO.	PART NO.	DESCRIPTION	Q'TY	REMARKS
22-1	34200-93J40	TACHOMETER ASSY, WITH MONITOR	1	BLACK
22-2	34200-93J51	TACHOMETER ASSY, WITH MONITOR	1	WHITE
23	09471-12077	.BULB (12V,1.7W)	1	
24	34190-95500	SENDER ASSY, SPEEDOMETER	1	
25	03112-0630B	.SCREW	2	
26	34190-87D00	SENDER, SPEEDOMETER	1	
27	36662-88L00	WIRE, EXTENSION	1	
28	36663-88L00	HARNESS ASSY, NETWORK POWER	1	
29	36663-98J00	WIRE, GAUGE POWER	1	
30	09481-05501	.FUSE (5A)	1	
31	36663-98J10	WIRE, GAUGE POWER	1	
32	09481-05501	.FUSE (5A)	1	
33	36665-88L00	UNIT, RESISTOR FEMALE	1	
34	36665-88L10	UNIT, RESISTOR MALE	1	

FIG.502J

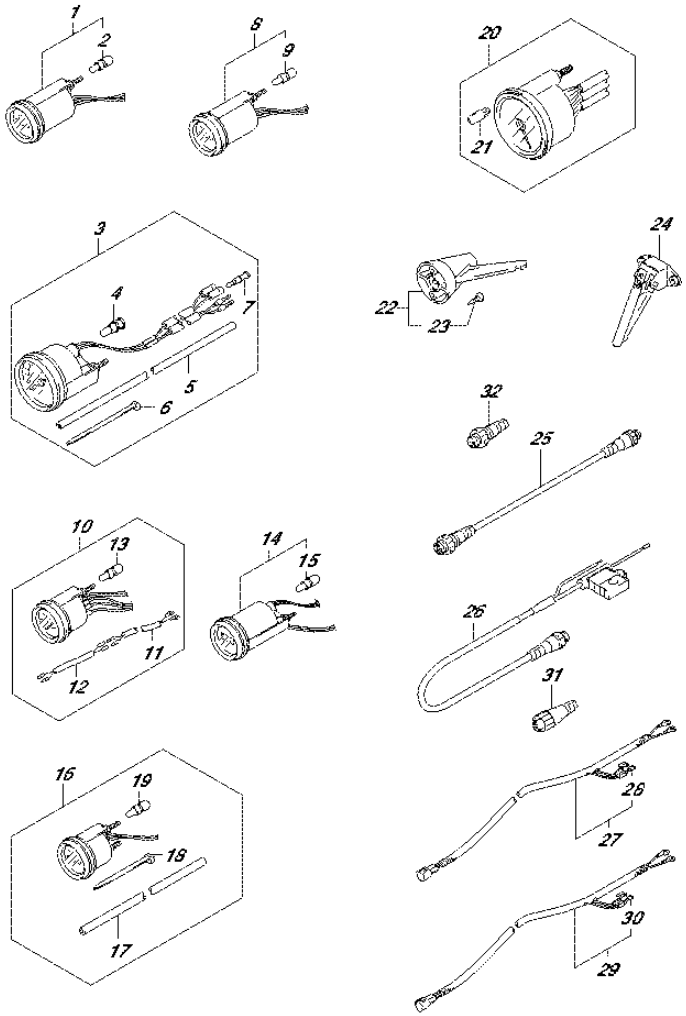

FIG.502J (4-F-12) OPT:METER (1) (DF60AQH E01)

REF NO.	PART NO.	DESCRIPTION	Q'TY	REMARKS
1-1	34800-93J00	METER ASSY, TRIM	1	BLACK
1-2	34800-93J11	METER ASSY, TRIM	1	WHITE
2	09471-12108	.BULB (12V,1.7W)	1	
3-1	34100-93J00	SPEEDOMETER ASSY	1	MAX 130KM/H BLACK
3-2	34100-93J11	SPEEDOMETER ASSY	1	MAX 130KM/H WHITE
3-3	34100-93J20	SPEEDOMETER ASSY	1	MAX 80KM/H BLACK
3-4	34100-93J31	SPEEDOMETER ASSY	1	MAX 80KM/H WHITE
3-5	34100-93J40	SPEEDOMETER ASSY	1	MAX 45KNOTS BLACK
3-6	34100-93J51	SPEEDOMETER ASSY	1	MAX 45KNOTS WHITE
3-7	34100-93J60	SPEEDOMETER ASSY	1	MAX 65KNOTS WHITE
4	09471-12028	.BULB (12V,3.4W)	1	
5	34191-92E00	.TUBE	1	
6	09407-14407	.CLAMP (L:145)	2	
7	36615-96300	.TERMINAL, RESIN	2	
8-1	34600-93J00	METER ASSY, VOLTAGE	1	BLACK
8-2	34600-93J11	METER ASSY, VOLTAGE	1	WHITE
9	09471-12103	.BULB (12V,3W,T6.5)	1	
10-1	34300-93J00	GAUGE ASSY, FUEL	1	BLACK
10-2	34300-93J11	GAUGE ASSY, FUEL	1	WHITE
11	34310-92E00	.LEAD, FUEL GAUGE	1	
12	34360-92E00	.ADAPTER, FUEL GAUGE	1	
13	09471-12103	.BULB (12V,3W,T6.5)	1	
14-1	34500-93J00	METER ASSY, HOUR	1	BLACK
14-2	34500-93J11	METER ASSY, HOUR	1	WHITE
15	09471-12103	.BULB (12V,3W,T6.5)	1	
16-1	34650-93J20	GAUGE ASSY, WATER PRESSURE	1	15PSI BLACK
16-2	34650-93J31	GAUGE ASSY, WATER PRESSURE	1	15PSI WHITE
17	34191-92E00	.TUBE	1	
18	09407-14407	.CLAMP (L:145)	2	
19	09471-12103	.BULB (12V,3W,T6.5)	1	
20-1	34200-93J00	TACHOMETER ASSY, WITH MONITOR	1	BLACK
20-2	34200-93J12	TACHOMETER ASSY, WITH MONITOR	1	WHITE
21	09471-12077	.BULB (12V,1.7W)	1	

FIG.502J

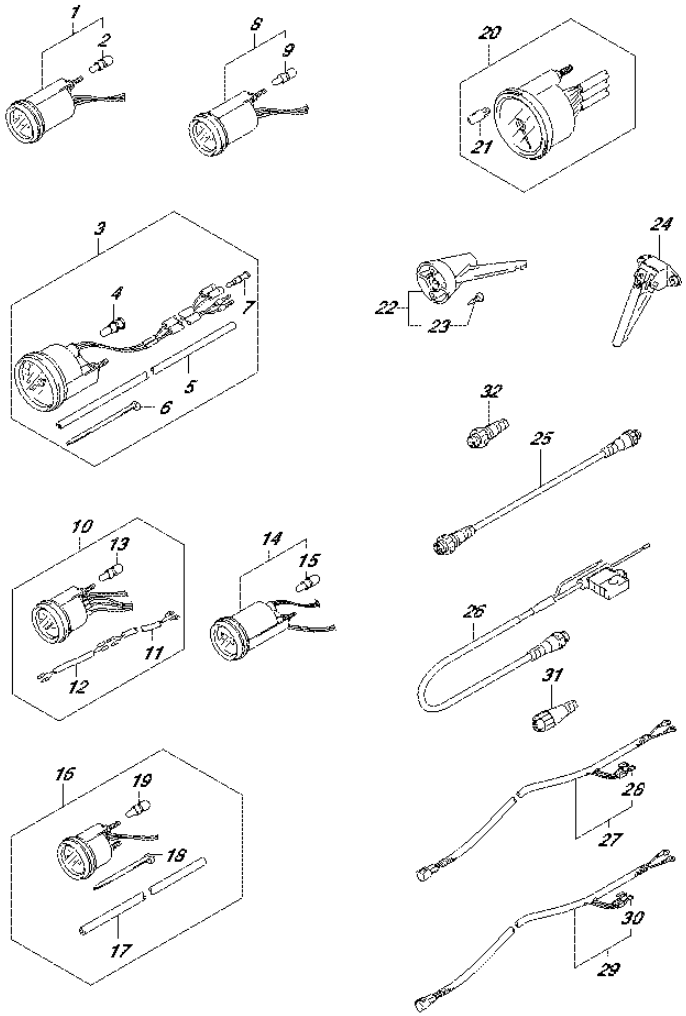

FIG.502J (4-F-13) OPT:METER (1) (DF60AQH E01)

REF NO.	PART NO.	DESCRIPTION	Q'TY	REMARKS
22	34190-95500	SENDER ASSY, SPEEDOMETER	1	
23	03112-0630B	.SCREW	2	
24	34190-87D00	SENDER, SPEEDOMETER	1	
25	36662-88L00	WIRE, EXTENSION	1	
26	36663-88L00	HARNESS ASSY, NETWORK POWER	1	
27	36663-98J00	WIRE, GAUGE POWER (2.5M)	1	
28	09481-05501	.FUSE (5A)	1	
29	36663-98J10	WIRE, GAUGE POWER (6.0M)	1	
30	09481-05501	.FUSE (5A)	1	
31	36665-88L00	UNIT, RESISTOR FEMALE	1	
32	36665-88L10	UNIT, RESISTOR MALE	1	

FIG.502K

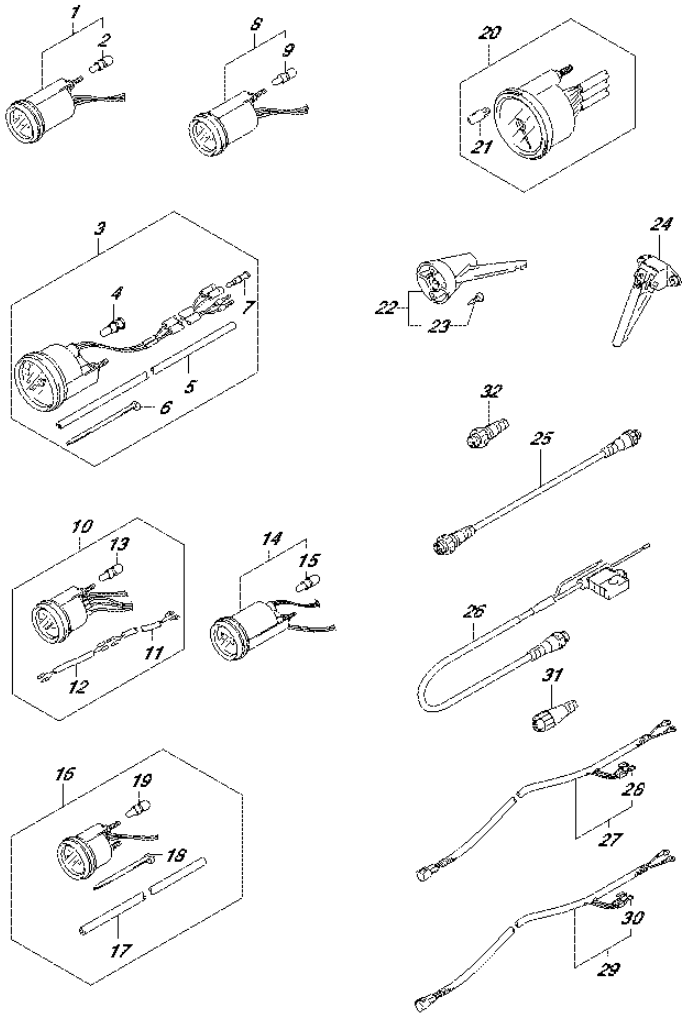

FIG.502K (4-F-14) OPT:METER (1) (DF60AQH E40)

REF NO.	PART NO.	DESCRIPTION	Q'TY	REMARKS
1-1	34800-93J00	METER ASSY, TRIM	1	BLACK
1-2	34800-93J11	METER ASSY, TRIM	1	WHITE
2	09471-12108	.BULB (12V,1.7W)	1	
3-1	34100-93J00	SPEEDOMETER ASSY	1	MAX 130KM/H BLACK
3-2	34100-93J11	SPEEDOMETER ASSY	1	MAX 130KM/H WHITE
3-3	34100-93J20	SPEEDOMETER ASSY	1	MAX 80KM/H BLACK
3-4	34100-93J31	SPEEDOMETER ASSY	1	MAX 80KM/H WHITE
3-5	34100-93J40	SPEEDOMETER ASSY	1	MAX 45KNOTS BLACK
3-6	34100-93J51	SPEEDOMETER ASSY	1	MAX 45KNOTS WHITE
3-7	34100-93J60	SPEEDOMETER ASSY	1	MAX 65KNOTS WHITE
4	09471-12028	.BULB (12V,3.4W)	1	
5	34191-92E00	.TUBE	1	
6	09407-14407	.CLAMP (L:145)	2	
7	36615-96300	.TERMINAL, RESIN	2	
8-1	34600-93J00	METER ASSY, VOLTAGE	1	BLACK
8-2	34600-93J11	METER ASSY, VOLTAGE	1	WHITE
9	09471-12103	.BULB (12V,3W,T6.5)	1	
10-1	34300-93J00	GAUGE ASSY, FUEL	1	BLACK
10-2	34300-93J11	GAUGE ASSY, FUEL	1	WHITE
11	34310-92E00	.LEAD, FUEL GAUGE	1	
12	34360-92E00	.ADAPTER, FUEL GAUGE	1	
13	09471-12103	.BULB (12V,3W,T6.5)	1	
14-1	34500-93J00	METER ASSY, HOUR	1	BLACK
14-2	34500-93J11	METER ASSY, HOUR	1	WHITE
15	09471-12103	.BULB (12V,3W,T6.5)	1	
16-1	34650-93J20	GAUGE ASSY, WATER PRESSURE	1	15PSI BLACK
16-2	34650-93J31	GAUGE ASSY, WATER PRESSURE	1	15PSI WHITE
17	34191-92E00	.TUBE	1	
18	09407-14407	.CLAMP (L:145)	2	
19	09471-12103	.BULB (12V,3W,T6.5)	1	
20-1	34200-93J00	TACHOMETER ASSY, WITH MONITOR	1	BLACK
20-2	34200-93J12	TACHOMETER ASSY, WITH MONITOR	1	WHITE
21	09471-12077	.BULB (12V,1.7W)	1	

FIG.502K

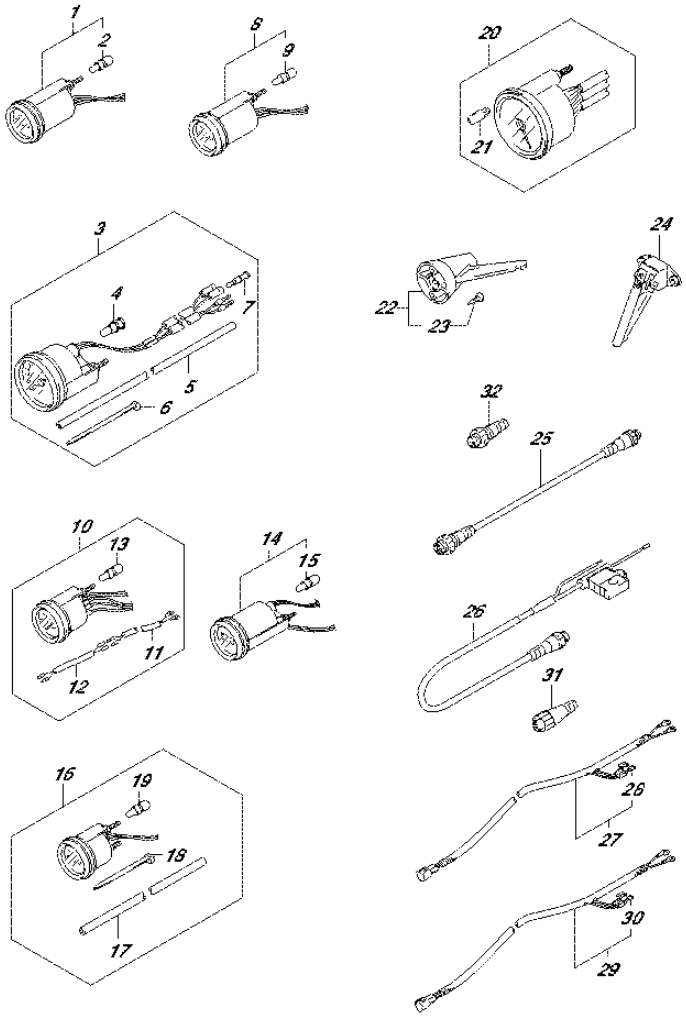

FIG.502K (4-F-15) OPT:METER (1) (DF60AQH E40)

REF NO.	PART NO.	DESCRIPTION	Q'TY	REMARKS
22	34190-95500	SENDER ASSY, SPEEDOMETER	1	
23	03112-0630B	.SCREW	2	
24	34190-87D00	SENDER, SPEEDOMETER	1	
25	36662-88L00	WIRE, EXTENSION	1	
26	36663-88L00	HARNESS ASSY, NETWORK POWER	1	
27	36663-98J00	WIRE, GAUGE POWER (2.5M)	1	
28	09481-05501	.FUSE (5A)	1	
29	36663-98J10	WIRE, GAUGE POWER (6.0M)	1	
30	09481-05501	.FUSE (5A)	1	
31	36665-88L00	UNIT, RESISTOR FEMALE	1	
32	36665-88L10	UNIT, RESISTOR MALE	1	

FIG.502L

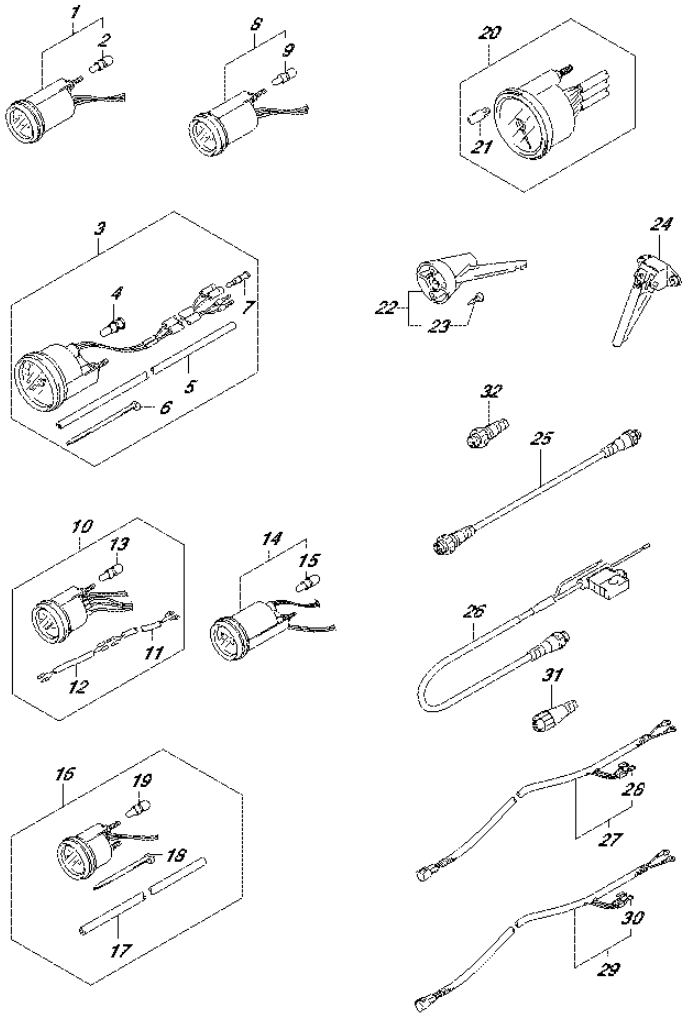

FIG.502L (4-G-2) OPT:METER (1) (DF60ATH E01)

REF NO.	PART NO.	DESCRIPTION	Q'TY	REMARKS
1-1	34800-93J00	METER ASSY, TRIM	1	BLACK
1-2	34800-93J11	METER ASSY, TRIM	1	WHITE
2	09471-12108	.BULB (12V,1.7W)	1	
3-1	34100-93J00	SPEEDOMETER ASSY	1	MAX 130KM/H BLACK
3-2	34100-93J11	SPEEDOMETER ASSY	1	MAX 130KM/H WHITE
3-3	34100-93J20	SPEEDOMETER ASSY	1	MAX 80KM/H BLACK
3-4	34100-93J31	SPEEDOMETER ASSY	1	MAX 80KM/H WHITE
3-5	34100-93J40	SPEEDOMETER ASSY	1	MAX 45KNOTS BLACK
3-6	34100-93J51	SPEEDOMETER ASSY	1	MAX 45KNOTS WHITE
3-7	34100-93J60	SPEEDOMETER ASSY	1	MAX 65KNOTS WHITE
4	09471-12028	.BULB (12V,3.4W)	1	
5	34191-92E00	.TUBE	1	
6	09407-14407	.CLAMP (L:145)	2	
7	36615-96300	.TERMINAL, RESIN	2	
8-1	34600-93J00	METER ASSY, VOLTAGE	1	BLACK
8-2	34600-93J11	METER ASSY, VOLTAGE	1	WHITE
9	09471-12103	.BULB (12V,3W,T6.5)	1	
10-1	34300-93J00	GAUGE ASSY, FUEL	1	BLACK
10-2	34300-93J11	GAUGE ASSY, FUEL	1	WHITE
11	34310-92E00	.LEAD, FUEL GAUGE	1	
12	34360-92E00	.ADAPTER, FUEL GAUGE	1	
13	09471-12103	.BULB (12V,3W,T6.5)	1	
14-1	34500-93J00	METER ASSY, HOUR	1	BLACK
14-2	34500-93J11	METER ASSY, HOUR	1	WHITE
15	09471-12103	.BULB (12V,3W,T6.5)	1	
16-1	34650-93J20	GAUGE ASSY, WATER PRESSURE	1	15PSI BLACK
16-2	34650-93J31	GAUGE ASSY, WATER PRESSURE	1	15PSI WHITE
17	34191-92E00	.TUBE	1	
18	09407-14407	.CLAMP (L:145)	2	
19	09471-12103	.BULB (12V,3W,T6.5)	1	
20-1	34200-93J00	TACHOMETER ASSY, WITH MONITOR	1	BLACK
20-2	34200-93J12	TACHOMETER ASSY, WITH MONITOR	1	WHITE
21	09471-12077	.BULB (12V,1.7W)	1	

FIG.502L

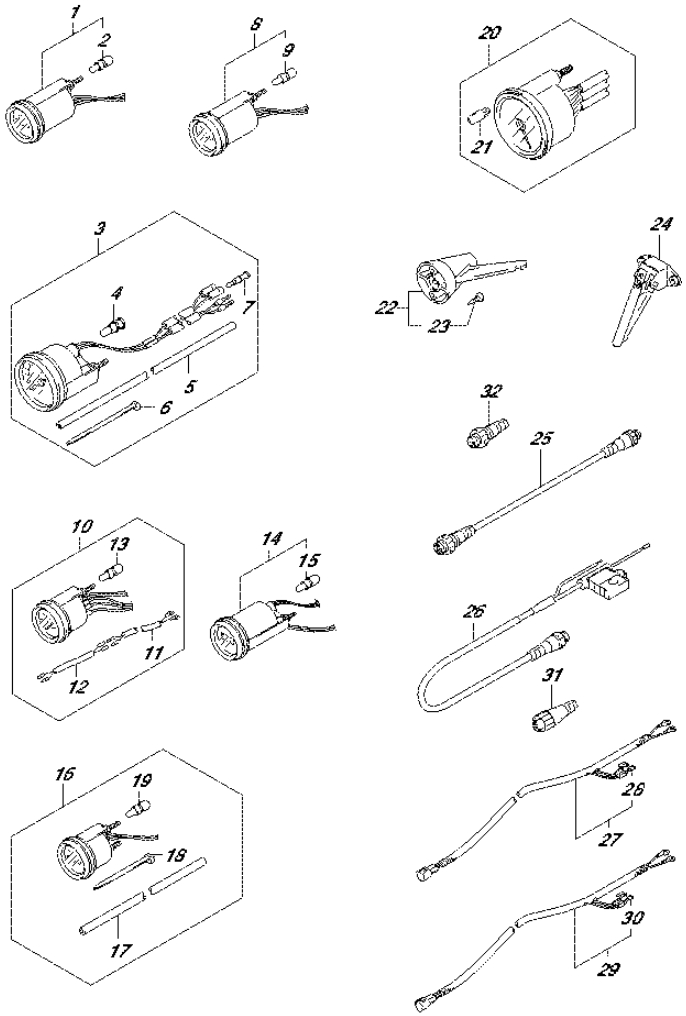

FIG.502L (4-G-3) OPT:METER (1) (DF60ATH E01)

REF NO.	PART NO.	DESCRIPTION	Q'TY	REMARKS
22	34190-95500	SENDER ASSY, SPEEDOMETER	1	
23	03112-0630B	.SCREW	2	
24	34190-87D00	SENDER, SPEEDOMETER	1	
25	36662-88L00	WIRE, EXTENSION	1	
26	36663-88L00	HARNESS ASSY, NETWORK POWER	1	
27	36663-98J00	WIRE, GAUGE POWER (2.5M)	1	
28	09481-05501	.FUSE (5A)	1	
29	36663-98J10	WIRE, GAUGE POWER (6.0M)	1	
30	09481-05501	.FUSE (5A)	1	
31	36665-88L00	UNIT, RESISTOR FEMALE	1	
32	36665-88L10	UNIT, RESISTOR MALE	1	

FIG.502M

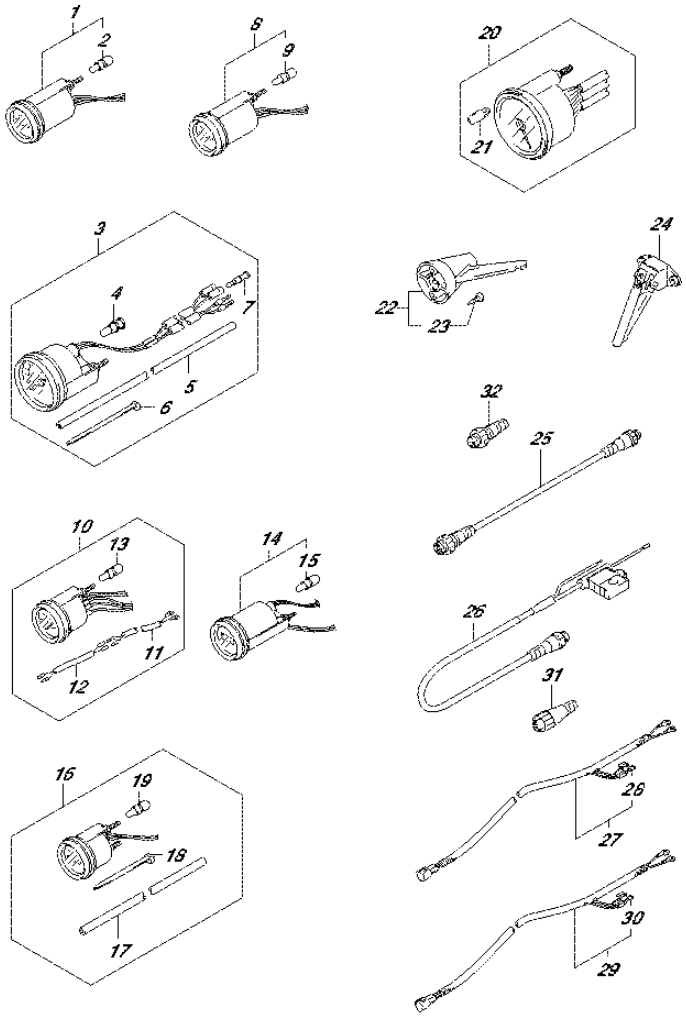

FIG.502M (4-G-4) OPT:METER (1) (DF60ATH E40)

REF NO.	PART NO.	DESCRIPTION	Q'TY	REMARKS
1-1	34800-93J00	METER ASSY, TRIM	1	BLACK
1-2	34800-93J11	METER ASSY, TRIM	1	WHITE
2	09471-12108	.BULB (12V,1.7W)	1	
3-1	34100-93J00	SPEEDOMETER ASSY	1	MAX 130KM/H BLACK
3-2	34100-93J11	SPEEDOMETER ASSY	1	MAX 130KM/H WHITE
3-3	34100-93J20	SPEEDOMETER ASSY	1	MAX 80KM/H BLACK
3-4	34100-93J31	SPEEDOMETER ASSY	1	MAX 80KM/H WHITE
3-5	34100-93J40	SPEEDOMETER ASSY	1	MAX 45KNOTS BLACK
3-6	34100-93J51	SPEEDOMETER ASSY	1	MAX 45KNOTS WHITE
3-7	34100-93J60	SPEEDOMETER ASSY	1	MAX 65KNOTS WHITE
4	09471-12028	.BULB (12V,3.4W)	1	
5	34191-92E00	.TUBE	1	
6	09407-14407	.CLAMP (L:145)	2	
7	36615-96300	.TERMINAL, RESIN	2	
8-1	34600-93J00	METER ASSY, VOLTAGE	1	BLACK
8-2	34600-93J11	METER ASSY, VOLTAGE	1	WHITE
9	09471-12103	.BULB (12V,3W,T6.5)	1	
10-1	34300-93J00	GAUGE ASSY, FUEL	1	BLACK
10-2	34300-93J11	GAUGE ASSY, FUEL	1	WHITE
11	34310-92E00	.LEAD, FUEL GAUGE	1	
12	34360-92E00	.ADAPTER, FUEL GAUGE	1	
13	09471-12103	.BULB (12V,3W,T6.5)	1	
14-1	34500-93J00	METER ASSY, HOUR	1	BLACK
14-2	34500-93J11	METER ASSY, HOUR	1	WHITE
15	09471-12103	.BULB (12V,3W,T6.5)	1	
16-1	34650-93J20	GAUGE ASSY, WATER PRESSURE	1	15PSI BLACK
16-2	34650-93J31	GAUGE ASSY, WATER PRESSURE	1	15PSI WHITE
17	34191-92E00	.TUBE	1	
18	09407-14407	.CLAMP (L:145)	2	
19	09471-12103	.BULB (12V,3W,T6.5)	1	
20-1	34200-93J00	TACHOMETER ASSY, WITH MONITOR	1	BLACK
20-2	34200-93J12	TACHOMETER ASSY, WITH MONITOR	1	WHITE
21	09471-12077	.BULB (12V,1.7W)	1	

FIG.502M

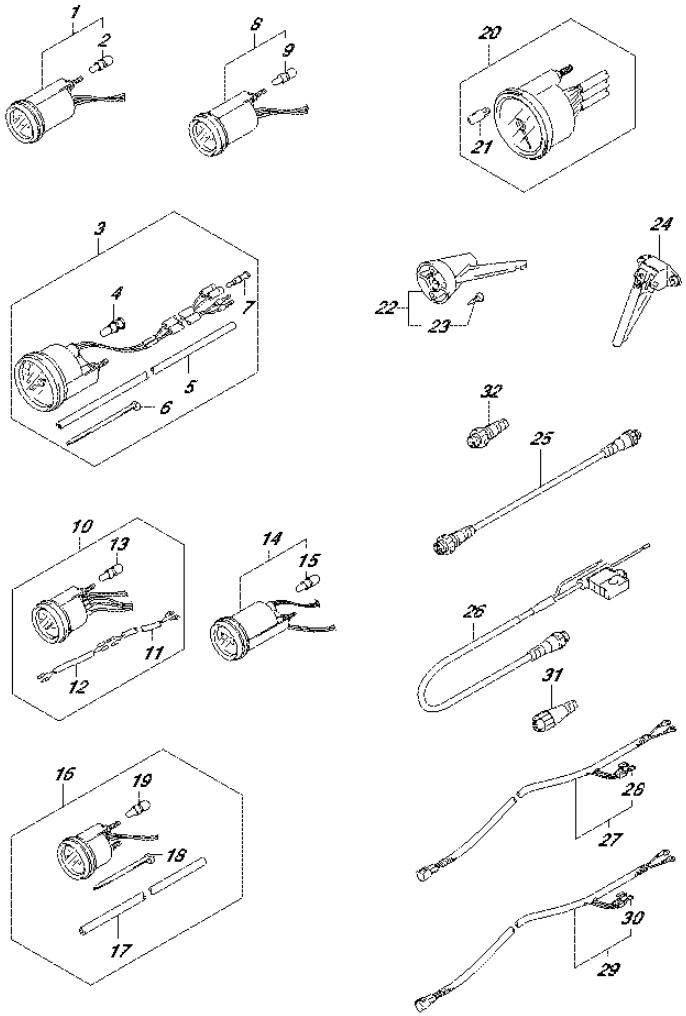

FIG.502M (4-G-5) OPT:METER (1) (DF60ATH E40)

REF NO.	PART NO.	DESCRIPTION	Q'TY	REMARKS
22	34190-95500	SENDER ASSY, SPEEDOMETER	1	
23	03112-0630B	.SCREW	2	
24	34190-87D00	SENDER, SPEEDOMETER	1	
25	36662-88L00	WIRE, EXTENSION	1	
26	36663-88L00	HARNESS ASSY, NETWORK POWER	1	
27	36663-98J00	WIRE, GAUGE POWER (2.5M)	1	
28	09481-05501	.FUSE (5A)	1	
29	36663-98J10	WIRE, GAUGE POWER (6.0M)	1	
30	09481-05501	.FUSE (5A)	1	
31	36665-88L00	UNIT, RESISTOR FEMALE	1	
32	36665-88L10	UNIT, RESISTOR MALE	1	

FIG.502N

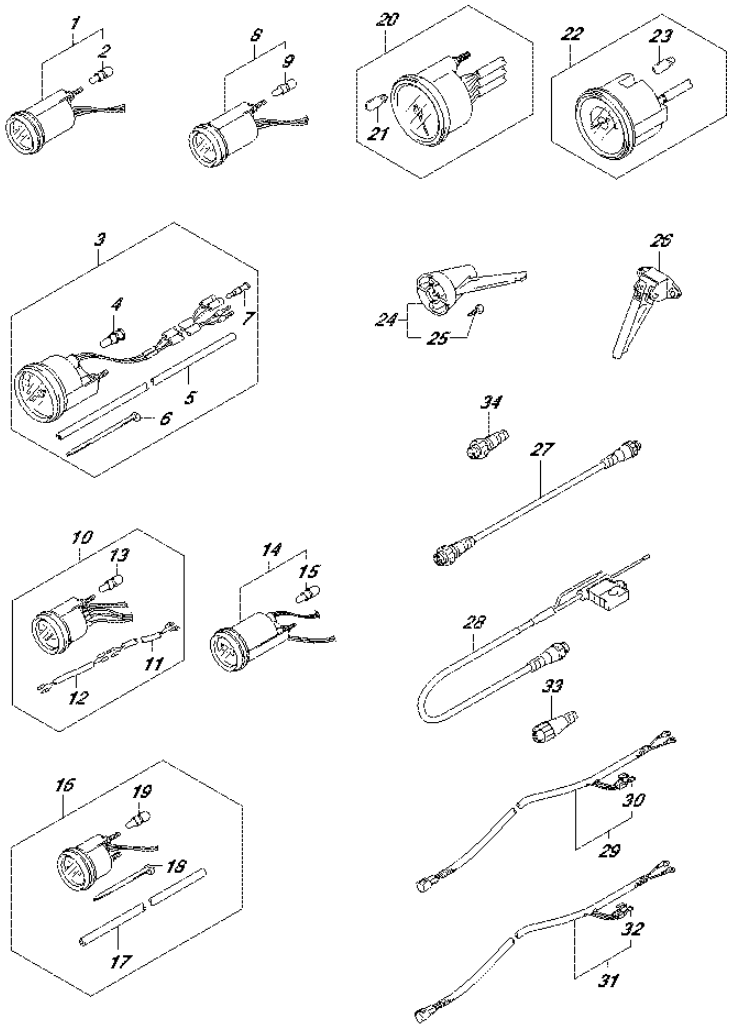

FIG.502N (4-G-6) OPT:METER (1) (DF50AVT E01)

REF NO.	PART NO.	DESCRIPTION	Q'TY	REMARKS
1-1	34800-93J00	METER ASSY, TRIM	1	BLACK
1-2	34800-93J11	METER ASSY, TRIM	1	WHITE
2	09471-12108	.BULB (12V,1.7W)	1	
3-1	34100-93J00	SPEEDOMETER ASSY	1	MAX 130KM/H BLACK
3-2	34100-93J11	SPEEDOMETER ASSY	1	MAX 130KM/H WHITE
3-3	34100-93J20	SPEEDOMETER ASSY	1	MAX 80KM/H BLACK
3-4	34100-93J31	SPEEDOMETER ASSY	1	MAX 80KM/H WHITE
3-5	34100-93J40	SPEEDOMETER ASSY	1	MAX 45KNOTS BLACK
3-6	34100-93J51	SPEEDOMETER ASSY	1	MAX 45KNOTS WHITE
3-7	34100-93J60	SPEEDOMETER ASSY	1	MAX 65KNOTS WHITE
4	09471-12028	.BULB (12V,3.4W)	1	
5	34191-92E00	.TUBE	1	
6	09407-14407	.CLAMP (L:145)	2	
7	36615-96300	.TERMINAL, RESIN	2	
8-1	34600-93J00	METER ASSY, VOLTAGE	1	BLACK
8-2	34600-93J11	METER ASSY, VOLTAGE	1	WHITE
9	09471-12103	.BULB (12V,3W,T6.5)	1	
10-1	34300-93J00	GAUGE ASSY, FUEL	1	BLACK
10-2	34300-93J11	GAUGE ASSY, FUEL	1	WHITE
11	34310-92E00	.LEAD, FUEL GAUGE	1	
12	34360-92E00	.ADAPTER, FUEL GAUGE	1	
13	09471-12103	.BULB (12V,3W,T6.5)	1	
14-1	34500-93J00	METER ASSY, HOUR	1	BLACK
14-2	34500-93J11	METER ASSY, HOUR	1	WHITE
15	09471-12103	.BULB (12V,3W,T6.5)	1	
16-1	34650-93J20	GAUGE ASSY, WATER PRESSURE	1	15PSI BLACK
16-2	34650-93J31	GAUGE ASSY, WATER PRESSURE	1	15PSI WHITE
17	34191-92E00	.TUBE	1	
18	09407-14407	.CLAMP (L:145)	2	
19	09471-12103	.BULB (12V,3W,T6.5)	1	
20-1	34200-93J00	TACHOMETER ASSY, WITH MONITOR	1	BLACK
20-2	34200-93J12	TACHOMETER ASSY, WITH MONITOR	1	WHITE
21	09471-12077	.BULB (12V,1.7W)	1	

FIG.502N

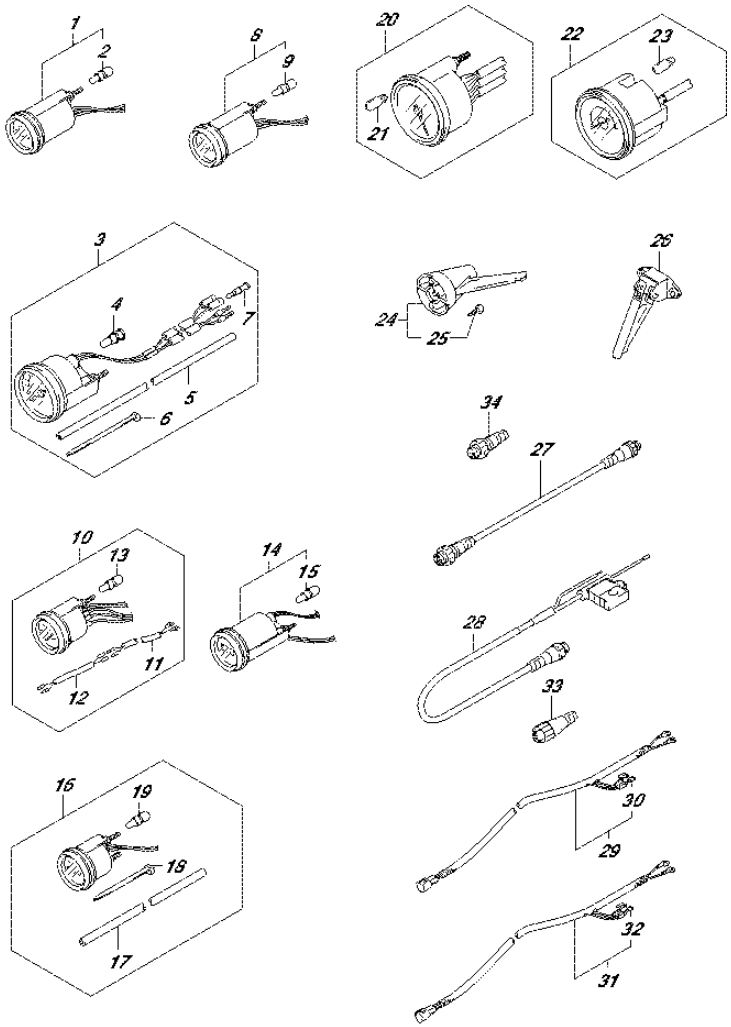

FIG.502N (4-G-7) OPT:METER (1) (DF50AVT E01)

REF NO.	PART NO.	DESCRIPTION	Q'TY	REMARKS
22-1	34200-93J40	TACHOMETER ASSY, WITH MONITOR	1	BLACK
22-2	34200-93J51	TACHOMETER ASSY, WITH MONITOR	1	WHITE
23	09471-12077	.BULB (12V,1.7W)	1	
24	34190-95500	SENDER ASSY, SPEEDOMETER	1	
25	03112-0630B	.SCREW	2	
26	34190-87D00	SENDER, SPEEDOMETER	1	
27	36662-88L00	WIRE, EXTENSION	1	
28	36663-88L00	HARNESS ASSY, NETWORK POWER	1	
29	36663-98J00	WIRE, GAUGE POWER	1	
30	09481-05501	.FUSE (5A)	1	
31	36663-98J10	WIRE, GAUGE POWER	1	
32	09481-05501	.FUSE (5A)	1	
33	36665-88L00	UNIT, RESISTOR FEMALE	1	
34	36665-88L10	UNIT, RESISTOR MALE	1	

FIG.502P

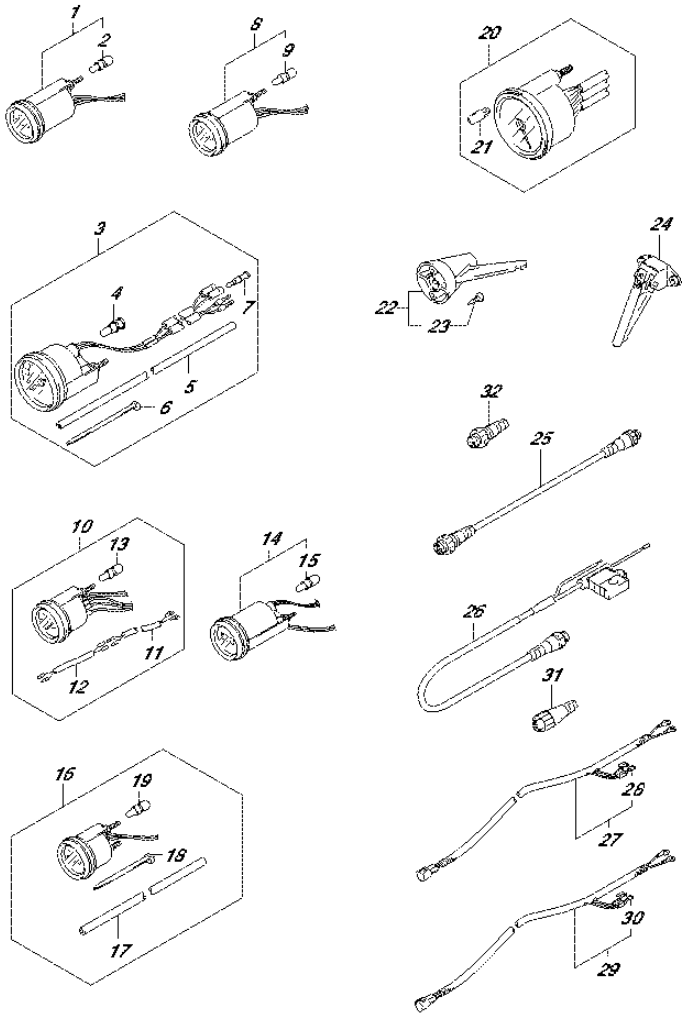

FIG.502P (4-G-8) OPT:METER (1) (DF50AVTH E01)

REF NO.	PART NO.	DESCRIPTION	Q'TY	REMARKS
1-1	34800-93J00	METER ASSY, TRIM	1	BLACK
1-2	34800-93J11	METER ASSY, TRIM	1	WHITE
2	09471-12108	.BULB (12V,1.7W)	1	
3-1	34100-93J00	SPEEDOMETER ASSY	1	MAX 130KM/H BLACK
3-2	34100-93J11	SPEEDOMETER ASSY	1	MAX 130KM/H WHITE
3-3	34100-93J20	SPEEDOMETER ASSY	1	MAX 80KM/H BLACK
3-4	34100-93J31	SPEEDOMETER ASSY	1	MAX 80KM/H WHITE
3-5	34100-93J40	SPEEDOMETER ASSY	1	MAX 45KNOTS BLACK
3-6	34100-93J51	SPEEDOMETER ASSY	1	MAX 45KNOTS WHITE
3-7	34100-93J60	SPEEDOMETER ASSY	1	MAX 65KNOTS WHITE
4	09471-12028	.BULB (12V,3.4W)	1	
5	34191-92E00	.TUBE	1	
6	09407-14407	.CLAMP (L:145)	2	
7	36615-96300	.TERMINAL, RESIN	2	
8-1	34600-93J00	METER ASSY, VOLTAGE	1	BLACK
8-2	34600-93J11	METER ASSY, VOLTAGE	1	WHITE
9	09471-12103	.BULB (12V,3W,T6.5)	1	
10-1	34300-93J00	GAUGE ASSY, FUEL	1	BLACK
10-2	34300-93J11	GAUGE ASSY, FUEL	1	WHITE
11	34310-92E00	.LEAD, FUEL GAUGE	1	
12	34360-92E00	.ADAPTER, FUEL GAUGE	1	
13	09471-12103	.BULB (12V,3W,T6.5)	1	
14-1	34500-93J00	METER ASSY, HOUR	1	BLACK
14-2	34500-93J11	METER ASSY, HOUR	1	WHITE
15	09471-12103	.BULB (12V,3W,T6.5)	1	
16-1	34650-93J20	GAUGE ASSY, WATER PRESSURE	1	15PSI BLACK
16-2	34650-93J31	GAUGE ASSY, WATER PRESSURE	1	15PSI WHITE
17	34191-92E00	.TUBE	1	
18	09407-14407	.CLAMP (L:145)	2	
19	09471-12103	.BULB (12V,3W,T6.5)	1	
20-1	34200-93J00	TACHOMETER ASSY, WITH MONITOR	1	BLACK
20-2	34200-93J12	TACHOMETER ASSY, WITH MONITOR	1	WHITE
21	09471-12077	.BULB (12V,1.7W)	1	

FIG.502P

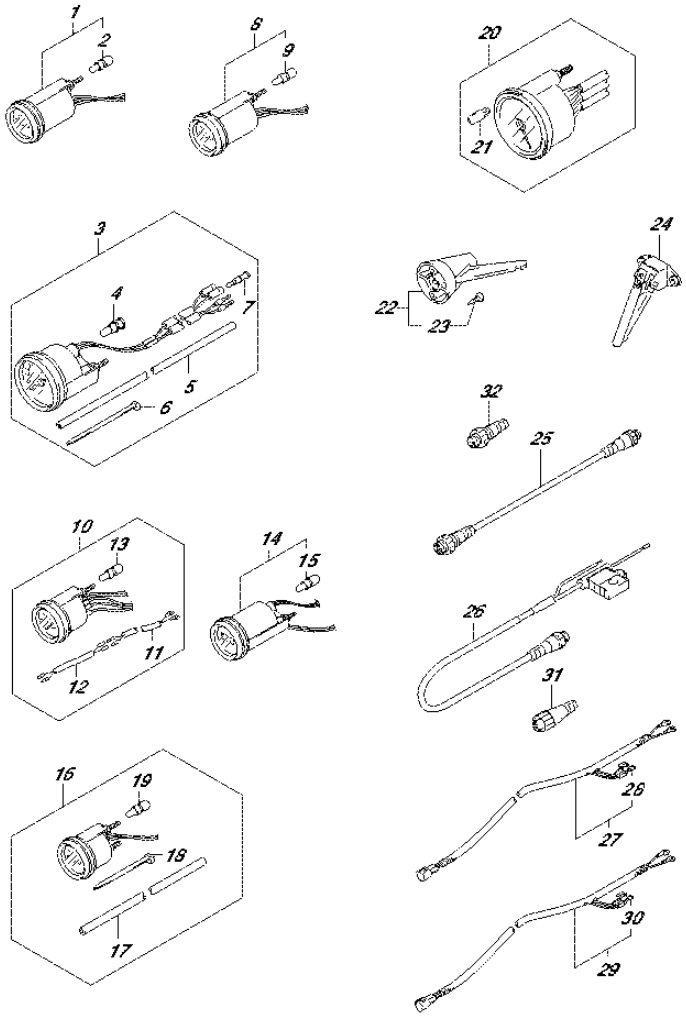

FIG.502P (4-G-9) OPT:METER (1) (DF50AVTH E01)

REF NO.	PART NO.	DESCRIPTION	Q'TY	REMARKS
22	34190-95500	SENDER ASSY, SPEEDOMETER	1	
23	03112-0630B	.SCREW	2	
24	34190-87D00	SENDER, SPEEDOMETER	1	
25	36662-88L00	WIRE, EXTENSION	1	
26	36663-88L00	HARNESS ASSY, NETWORK POWER	1	
27	36663-98J00	WIRE, GAUGE POWER (2.5M)	1	
28	09481-05501	.FUSE (5A)	1	
29	36663-98J10	WIRE, GAUGE POWER (6.0M)	1	
30	09481-05501	.FUSE (5A)	1	
31	36665-88L00	UNIT, RESISTOR FEMALE	1	
32	36665-88L10	UNIT, RESISTOR MALE	1	

FIG.502R

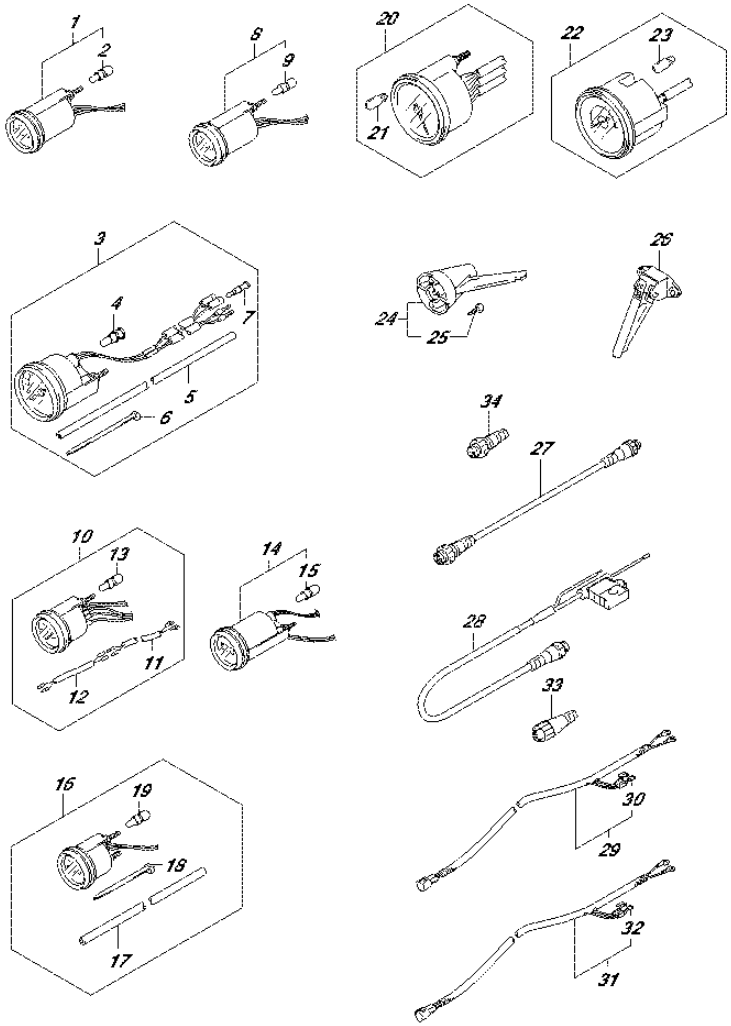

FIG.502R (4-G-10) OPT:METER (1) (DF60AVT E01)

REF NO.	PART NO.	DESCRIPTION	Q'TY	REMARKS
1-1	34800-93J00	METER ASSY, TRIM	1	BLACK
1-2	34800-93J11	METER ASSY, TRIM	1	WHITE
2	09471-12108	.BULB (12V,1.7W)	1	
3-1	34100-93J00	SPEEDOMETER ASSY	1	MAX 130KM/H BLACK
3-2	34100-93J11	SPEEDOMETER ASSY	1	MAX 130KM/H WHITE
3-3	34100-93J20	SPEEDOMETER ASSY	1	MAX 80KM/H BLACK
3-4	34100-93J31	SPEEDOMETER ASSY	1	MAX 80KM/H WHITE
3-5	34100-93J40	SPEEDOMETER ASSY	1	MAX 45KNOTS BLACK
3-6	34100-93J51	SPEEDOMETER ASSY	1	MAX 45KNOTS WHITE
3-7	34100-93J60	SPEEDOMETER ASSY	1	MAX 65KNOTS WHITE
4	09471-12028	.BULB (12V,3.4W)	1	
5	34191-92E00	.TUBE	1	
6	09407-14407	.CLAMP (L:145)	2	
7	36615-96300	.TERMINAL, RESIN	2	
8-1	34600-93J00	METER ASSY, VOLTAGE	1	BLACK
8-2	34600-93J11	METER ASSY, VOLTAGE	1	WHITE
9	09471-12103	.BULB (12V,3W,T6.5)	1	
10-1	34300-93J00	GAUGE ASSY, FUEL	1	BLACK
10-2	34300-93J11	GAUGE ASSY, FUEL	1	WHITE
11	34310-92E00	.LEAD, FUEL GAUGE	1	
12	34360-92E00	.ADAPTER, FUEL GAUGE	1	
13	09471-12103	.BULB (12V,3W,T6.5)	1	
14-1	34500-93J00	METER ASSY, HOUR	1	BLACK
14-2	34500-93J11	METER ASSY, HOUR	1	WHITE
15	09471-12103	.BULB (12V,3W,T6.5)	1	
16-1	34650-93J20	GAUGE ASSY, WATER PRESSURE	1	15PSI BLACK
16-2	34650-93J31	GAUGE ASSY, WATER PRESSURE	1	15PSI WHITE
17	34191-92E00	.TUBE	1	
18	09407-14407	.CLAMP (L:145)	2	
19	09471-12103	.BULB (12V,3W,T6.5)	1	
20-1	34200-93J00	TACHOMETER ASSY, WITH MONITOR	1	BLACK
20-2	34200-93J12	TACHOMETER ASSY, WITH MONITOR	1	WHITE
21	09471-12077	.BULB (12V,1.7W)	1	

FIG.502R

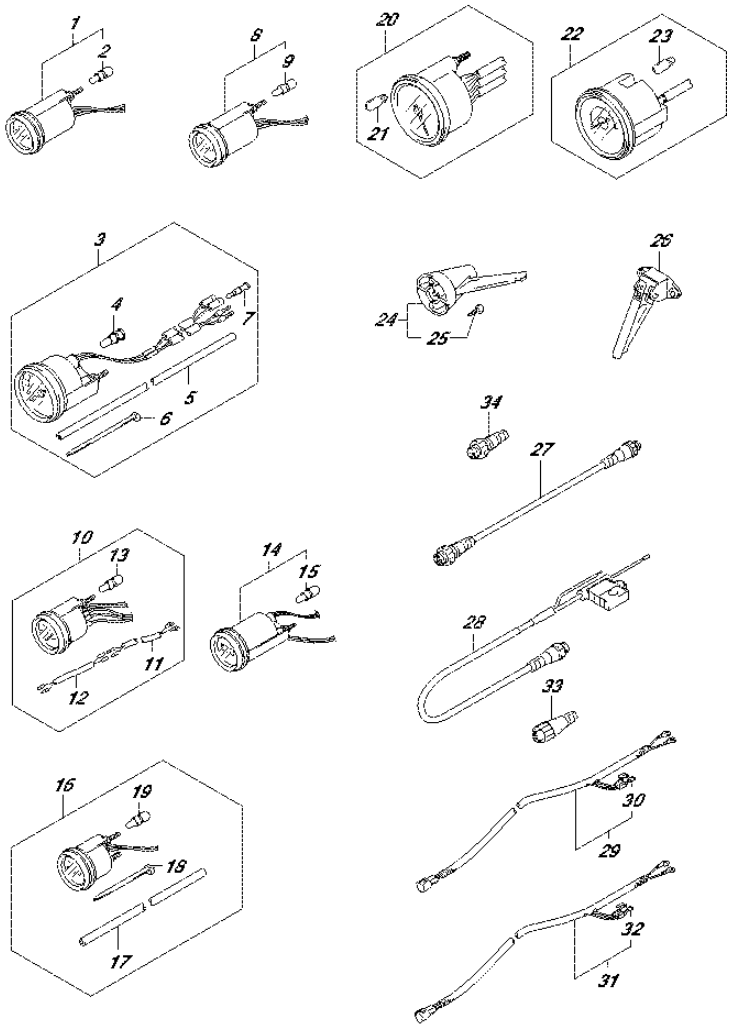

FIG.502R (4-G-11) OPT:METER (1) (DF60AVT E01)

REF NO.	PART NO.	DESCRIPTION	Q'TY	REMARKS
22-1	34200-93J40	TACHOMETER ASSY, WITH MONITOR	1	BLACK
22-2	34200-93J51	TACHOMETER ASSY, WITH MONITOR	1	WHITE
23	09471-12077	.BULB (12V,1.7W)	1	
24	34190-95500	SENDER ASSY, SPEEDOMETER	1	
25	03112-0630B	.SCREW	2	
26	34190-87D00	SENDER, SPEEDOMETER	1	
27	36662-88L00	WIRE, EXTENSION	1	
28	36663-88L00	HARNESS ASSY, NETWORK POWER	1	
29	36663-98J00	WIRE, GAUGE POWER	1	
30	09481-05501	.FUSE (5A)	1	
31	36663-98J10	WIRE, GAUGE POWER	1	
32	09481-05501	.FUSE (5A)	1	
33	36665-88L00	UNIT, RESISTOR FEMALE	1	
34	36665-88L10	UNIT, RESISTOR MALE	1	

FIG.502S

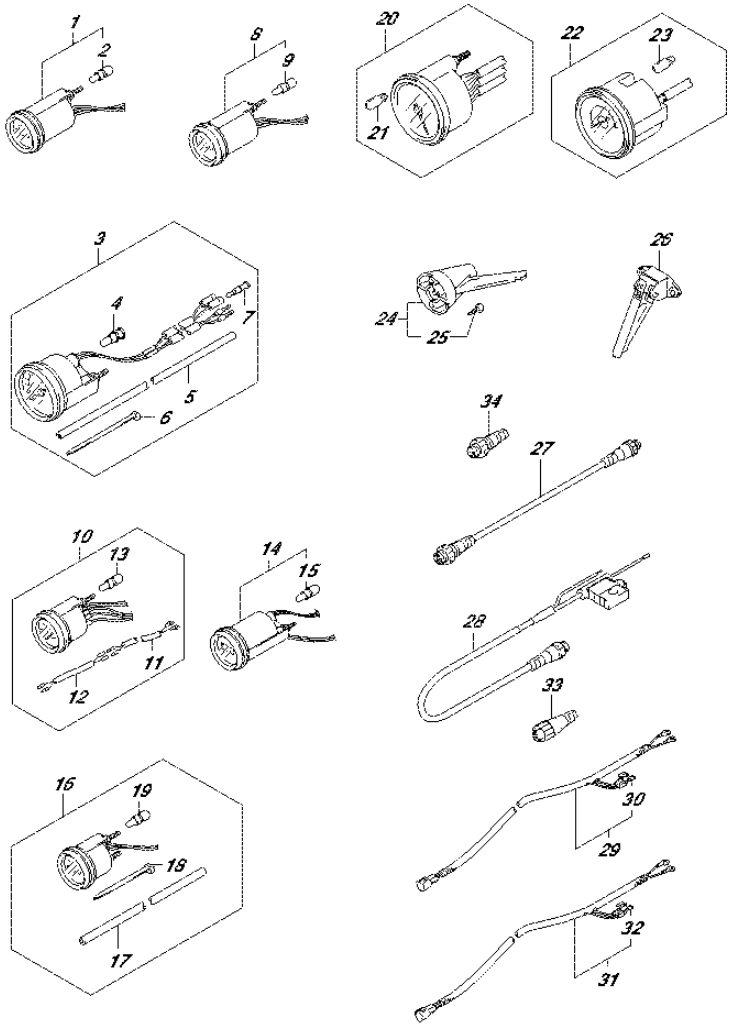

FIG.502S (4-G-12) OPT:METER (1) (DF60AVT E40)

REF NO.	PART NO.	DESCRIPTION	Q'TY	REMARKS
1-1	34800-93J00	METER ASSY, TRIM	1	BLACK
1-2	34800-93J11	METER ASSY, TRIM	1	WHITE
2	09471-12108	.BULB (12V,1.7W)	1	
3-1	34100-93J00	SPEEDOMETER ASSY	1	MAX 130KM/H BLACK
3-2	34100-93J11	SPEEDOMETER ASSY	1	MAX 130KM/H WHITE
3-3	34100-93J20	SPEEDOMETER ASSY	1	MAX 80KM/H BLACK
3-4	34100-93J31	SPEEDOMETER ASSY	1	MAX 80KM/H WHITE
3-5	34100-93J40	SPEEDOMETER ASSY	1	MAX 45KNOTS BLACK
3-6	34100-93J51	SPEEDOMETER ASSY	1	MAX 45KNOTS WHITE
3-7	34100-93J60	SPEEDOMETER ASSY	1	MAX 65KNOTS WHITE
4	09471-12028	.BULB (12V,3.4W)	1	
5	34191-92E00	.TUBE	1	
6	09407-14407	.CLAMP (L:145)	2	
7	36615-96300	.TERMINAL, RESIN	2	
8-1	34600-93J00	METER ASSY, VOLTAGE	1	BLACK
8-2	34600-93J11	METER ASSY, VOLTAGE	1	WHITE
9	09471-12103	.BULB (12V,3W,T6.5)	1	
10-1	34300-93J00	GAUGE ASSY, FUEL	1	BLACK
10-2	34300-93J11	GAUGE ASSY, FUEL	1	WHITE
11	34310-92E00	.LEAD, FUEL GAUGE	1	
12	34360-92E00	.ADAPTER, FUEL GAUGE	1	
13	09471-12103	.BULB (12V,3W,T6.5)	1	
14-1	34500-93J00	METER ASSY, HOUR	1	BLACK
14-2	34500-93J11	METER ASSY, HOUR	1	WHITE
15	09471-12103	.BULB (12V,3W,T6.5)	1	
16-1	34650-93J20	GAUGE ASSY, WATER PRESSURE	1	15PSI BLACK
16-2	34650-93J31	GAUGE ASSY, WATER PRESSURE	1	15PSI WHITE
17	34191-92E00	.TUBE	1	
18	09407-14407	.CLAMP (L:145)	2	
19	09471-12103	.BULB (12V,3W,T6.5)	1	
20-1	34200-93J00	TACHOMETER ASSY, WITH MONITOR	1	BLACK
20-2	34200-93J12	TACHOMETER ASSY, WITH MONITOR	1	WHITE
21	09471-12077	.BULB (12V,1.7W)	1	

FIG.502S

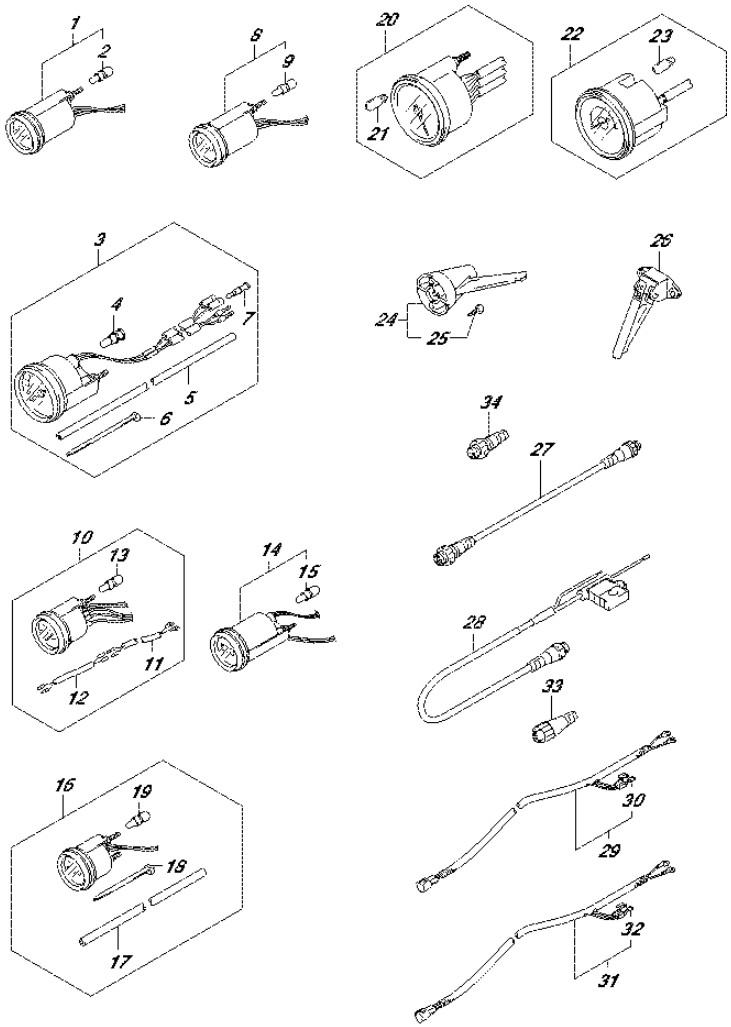

FIG.502S (4-G-13) OPT:METER (1) (DF60AVT E40)

REF NO.	PART NO.	DESCRIPTION	Q'TY	REMARKS
22-1	34200-93J40	TACHOMETER ASSY, WITH MONITOR	1	BLACK
22-2	34200-93J51	TACHOMETER ASSY, WITH MONITOR	1	WHITE
23	09471-12077	.BULB (12V,1.7W)	1	
24	34190-95500	SENDER ASSY, SPEEDOMETER	1	
25	03112-0630B	.SCREW	2	
26	34190-87D00	SENDER, SPEEDOMETER	1	
27	36662-88L00	WIRE, EXTENSION	1	
28	36663-88L00	HARNESS ASSY, NETWORK POWER	1	
29	36663-98J00	WIRE, GAUGE POWER	1	
30	09481-05501	.FUSE (5A)	1	
31	36663-98J10	WIRE, GAUGE POWER	1	
32	09481-05501	.FUSE (5A)	1	
33	36665-88L00	UNIT, RESISTOR FEMALE	1	
34	36665-88L10	UNIT, RESISTOR MALE	1	

FIG.502T

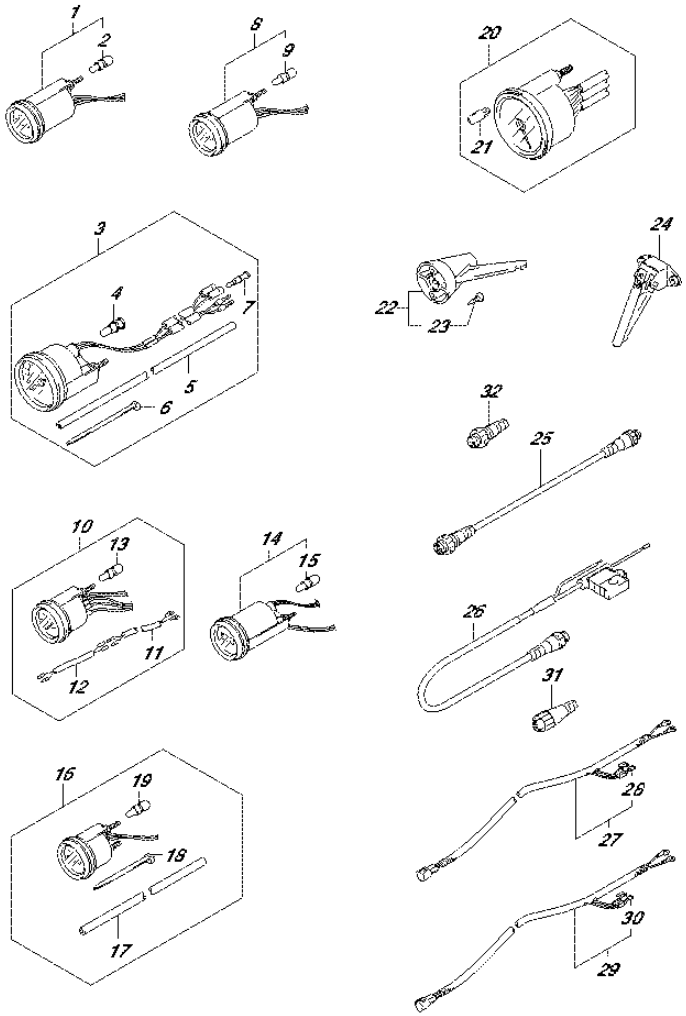

DF60A_E01_016_502T
OPT:METER (1)

FIG.502T (4-G-14) OPT:METER (1) (DF60AVTH E01)

REF NO.	PART NO.	DESCRIPTION	Q'TY	REMARKS
1-1	34800-93J00	METER ASSY, TRIM	1	BLACK
1-2	34800-93J11	METER ASSY, TRIM	1	WHITE
2	09471-12108	.BULB (12V,1.7W)	1	
3-1	34100-93J00	SPEEDOMETER ASSY	1	MAX 130KM/H BLACK
3-2	34100-93J11	SPEEDOMETER ASSY	1	MAX 130KM/H WHITE
3-3	34100-93J20	SPEEDOMETER ASSY	1	MAX 80KM/H BLACK
3-4	34100-93J31	SPEEDOMETER ASSY	1	MAX 80KM/H WHITE
3-5	34100-93J40	SPEEDOMETER ASSY	1	MAX 45KNOTS BLACK
3-6	34100-93J51	SPEEDOMETER ASSY	1	MAX 45KNOTS WHITE
3-7	34100-93J60	SPEEDOMETER ASSY	1	MAX 65KNOTS WHITE
4	09471-12028	.BULB (12V,3.4W)	1	
5	34191-92E00	.TUBE	1	
6	09407-14407	.CLAMP (L:145)	2	
7	36615-96300	.TERMINAL, RESIN	2	
8-1	34600-93J00	METER ASSY, VOLTAGE	1	BLACK
8-2	34600-93J11	METER ASSY, VOLTAGE	1	WHITE
9	09471-12103	.BULB (12V,3W,T6.5)	1	
10-1	34300-93J00	GAUGE ASSY, FUEL	1	BLACK
10-2	34300-93J11	GAUGE ASSY, FUEL	1	WHITE
11	34310-92E00	.LEAD, FUEL GAUGE	1	
12	34360-92E00	.ADAPTER, FUEL GAUGE	1	
13	09471-12103	.BULB (12V,3W,T6.5)	1	
14-1	34500-93J00	METER ASSY, HOUR	1	BLACK
14-2	34500-93J11	METER ASSY, HOUR	1	WHITE
15	09471-12103	.BULB (12V,3W,T6.5)	1	
16-1	34650-93J20	GAUGE ASSY, WATER PRESSURE	1	15PSI BLACK
16-2	34650-93J31	GAUGE ASSY, WATER PRESSURE	1	15PSI WHITE
17	34191-92E00	.TUBE	1	
18	09407-14407	.CLAMP (L:145)	2	
19	09471-12103	.BULB (12V,3W,T6.5)	1	
20-1	34200-93J00	TACHOMETER ASSY, WITH MONITOR	1	BLACK
20-2	34200-93J12	TACHOMETER ASSY, WITH MONITOR	1	WHITE
21	09471-12077	.BULB (12V,1.7W)	1	

FIG.502T

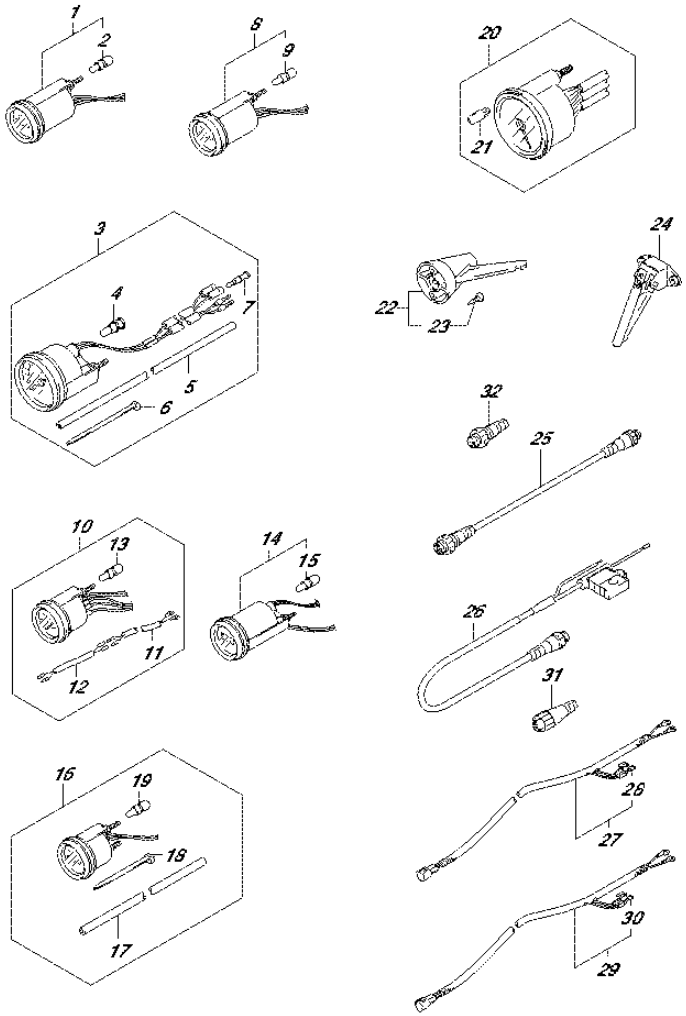

FIG.502T (4-G-15) OPT:METER (1) (DF60AVTH E01)

REF NO.	PART NO.	DESCRIPTION	Q'TY	REMARKS
22	34190-95500	SENDER ASSY, SPEEDOMETER	1	
23	03112-0630B	.SCREW	2	
24	34190-87D00	SENDER, SPEEDOMETER	1	
25	36662-88L00	WIRE, EXTENSION	1	
26	36663-88L00	HARNESS ASSY, NETWORK POWER	1	
27	36663-98J00	WIRE, GAUGE POWER (2.5M)	1	
28	09481-05501	.FUSE (5A)	1	
29	36663-98J10	WIRE, GAUGE POWER (6.0M)	1	
30	09481-05501	.FUSE (5A)	1	
31	36665-88L00	UNIT, RESISTOR FEMALE	1	
32	36665-88L10	UNIT, RESISTOR MALE	1	

FIG.502U

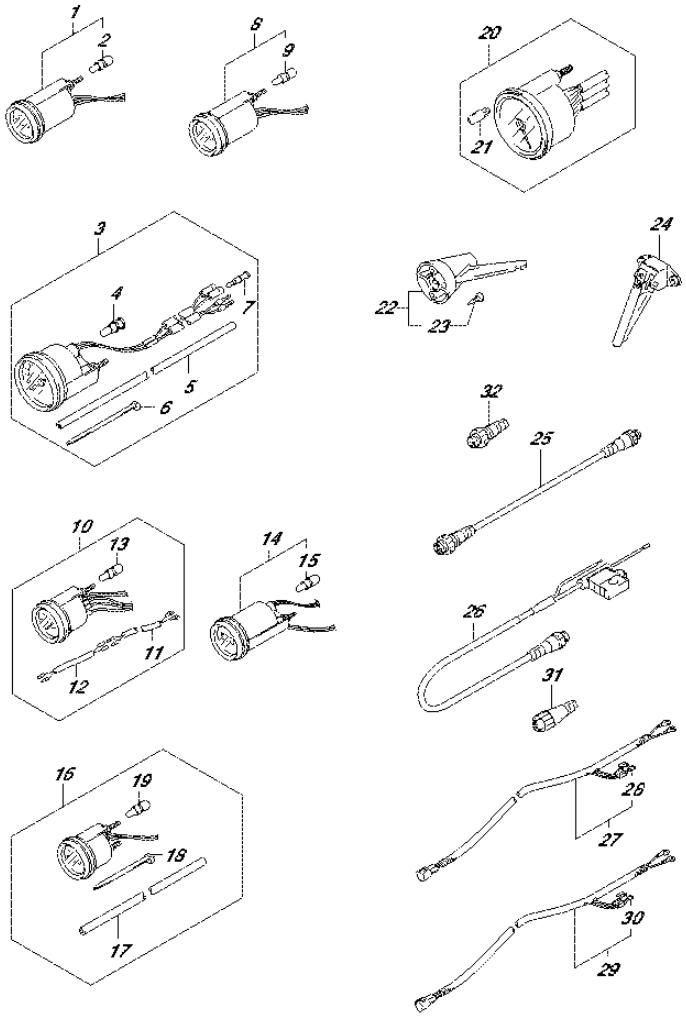

FIG.502U (4-H-2) OPT:METER (1) (DF60AVTH E40)

REF NO.	PART NO.	DESCRIPTION	Q'TY	REMARKS
1-1	34800-93J00	METER ASSY, TRIM	1	BLACK
1-2	34800-93J11	METER ASSY, TRIM	1	WHITE
2	09471-12108	.BULB (12V,1.7W)	1	
3-1	34100-93J00	SPEEDOMETER ASSY	1	MAX 130KM/H BLACK
3-2	34100-93J11	SPEEDOMETER ASSY	1	MAX 130KM/H WHITE
3-3	34100-93J20	SPEEDOMETER ASSY	1	MAX 80KM/H BLACK
3-4	34100-93J31	SPEEDOMETER ASSY	1	MAX 80KM/H WHITE
3-5	34100-93J40	SPEEDOMETER ASSY	1	MAX 45KNOTS BLACK
3-6	34100-93J51	SPEEDOMETER ASSY	1	MAX 45KNOTS WHITE
3-7	34100-93J60	SPEEDOMETER ASSY	1	MAX 65KNOTS WHITE
4	09471-12028	.BULB (12V,3.4W)	1	
5	34191-92E00	.TUBE	1	
6	09407-14407	.CLAMP (L:145)	2	
7	36615-96300	.TERMINAL, RESIN	2	
8-1	34600-93J00	METER ASSY, VOLTAGE	1	BLACK
8-2	34600-93J11	METER ASSY, VOLTAGE	1	WHITE
9	09471-12103	.BULB (12V,3W,T6.5)	1	
10-1	34300-93J00	GAUGE ASSY, FUEL	1	BLACK
10-2	34300-93J11	GAUGE ASSY, FUEL	1	WHITE
11	34310-92E00	.LEAD, FUEL GAUGE	1	
12	34360-92E00	.ADAPTER, FUEL GAUGE	1	
13	09471-12103	.BULB (12V,3W,T6.5)	1	
14-1	34500-93J00	METER ASSY, HOUR	1	BLACK
14-2	34500-93J11	METER ASSY, HOUR	1	WHITE
15	09471-12103	.BULB (12V,3W,T6.5)	1	
16-1	34650-93J20	GAUGE ASSY, WATER PRESSURE	1	15PSI BLACK
16-2	34650-93J31	GAUGE ASSY, WATER PRESSURE	1	15PSI WHITE
17	34191-92E00	.TUBE	1	
18	09407-14407	.CLAMP (L:145)	2	
19	09471-12103	.BULB (12V,3W,T6.5)	1	
20-1	34200-93J00	TACHOMETER ASSY, WITH MONITOR	1	BLACK
20-2	34200-93J12	TACHOMETER ASSY, WITH MONITOR	1	WHITE
21	09471-12077	.BULB (12V,1.7W)	1	

FIG.502U

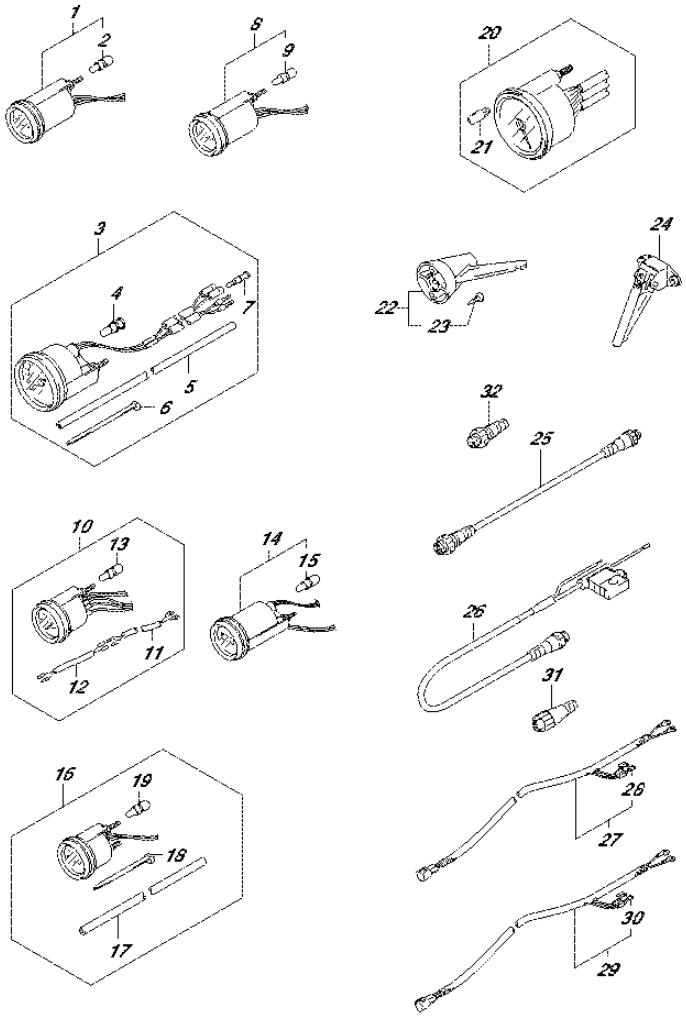

FIG.502U (4-H-3) OPT:METER (1) (DF60AVTH E40)

REF NO.	PART NO.	DESCRIPTION	Q'TY	REMARKS
22	34190-95500	SENDER ASSY, SPEEDOMETER	1	
23	03112-0630B	.SCREW	2	
24	34190-87D00	SENDER, SPEEDOMETER	1	
25	36662-88L00	WIRE, EXTENSION	1	
26	36663-88L00	HARNESS ASSY, NETWORK POWER	1	
27	36663-98J00	WIRE, GAUGE POWER (2.5M)	1	
28	09481-05501	.FUSE (5A)	1	
29	36663-98J10	WIRE, GAUGE POWER (6.0M)	1	
30	09481-05501	.FUSE (5A)	1	
31	36665-88L00	UNIT, RESISTOR FEMALE	1	
32	36665-88L10	UNIT, RESISTOR MALE	1	

FIG.503A

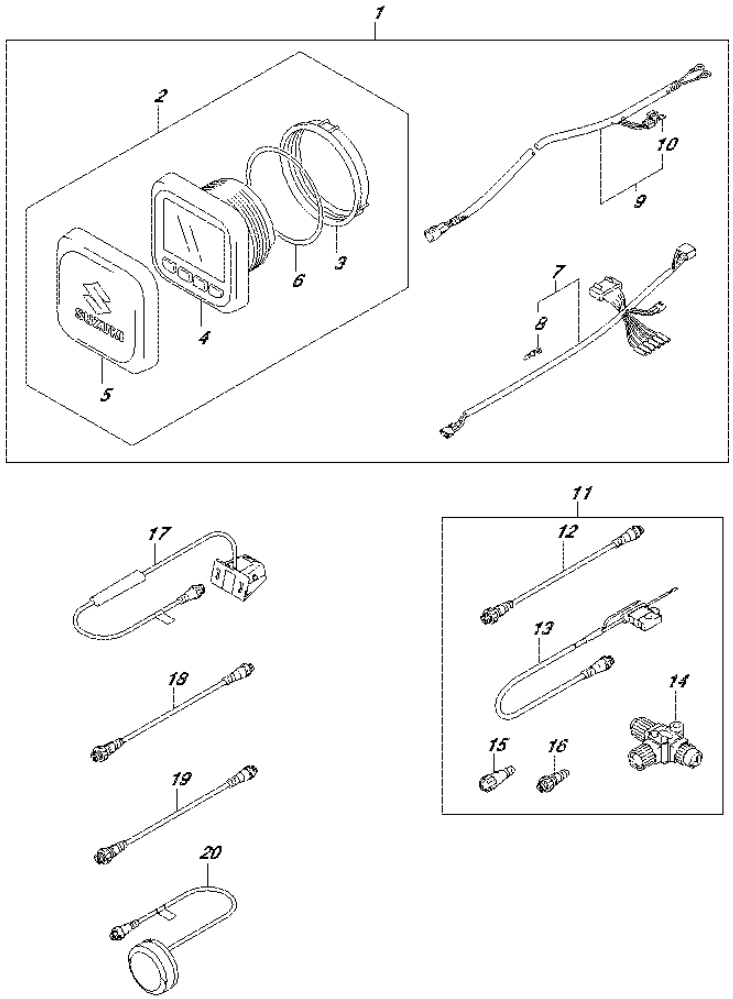

FIG.503A (4-H-4) OPT:METER (2) (DF40A E01)

REF NO.	PART NO.	DESCRIPTION	Q'TY	REMARKS
1	34000-96L00	KIT, SINGLE GAUGE MECH	1	
2	34011-96L00	.SET, MULTI GAUGE	1	
3	34112-96L00	..NUT, GAUGE	1	
4	34193-96L00	..BEZEL, GAUGE	1	
5	34211-96L00	..COVER, GAUGE	1	
6	34825-96L00	..PACKING, GAUGE	1	
7	36661-96L10	.ADAPTER, GAUGE	1	
8	36615-96300	..TERMINAL	5	
9	36663-98J10	.WIRE, GAUGE POWER	1	
10	09481-05501	..FUSE (5A)	1	
11	36001-88L00	SET, WIRE	1	
12	36662-88L10	.WIRE, 2 EXTENSION	1	
13	36663-88L00	.HARNESS ASSY, NETWORK POWER	1	
14	36664-88L00	.CONNECTOR, BRANCH	1	
15	36665-88L00	.UNIT, RESISTOR FEMALE	1	
16	36665-88L10	.UNIT, RESISTOR MALE	1	
17	34190-88L00	SENSOR ASSY, PAD WHEEL	1	
18	36662-88L20	WIRE, 6 EXTENSION	1	
19	36662-88L30	WIRE, 15 EXTENSION	1	
20	39950-88L00	MODULE ASSY, GPS RECEIVER	1	

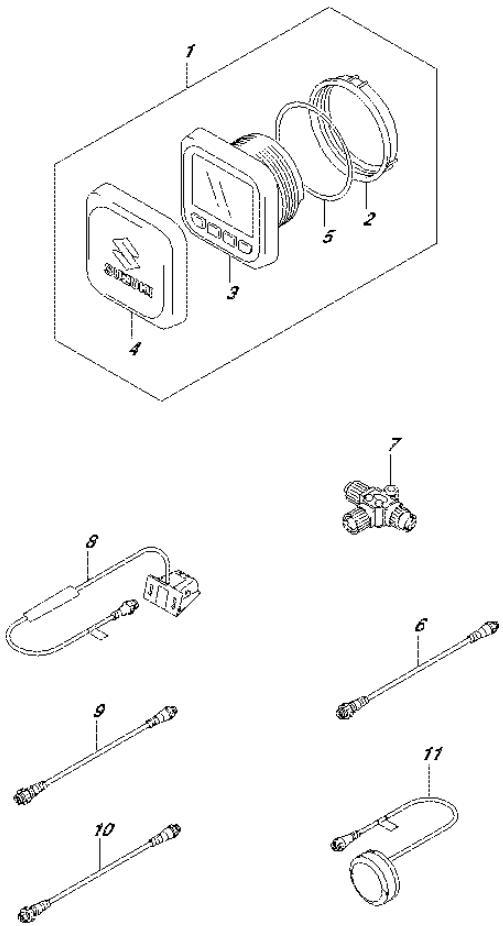

FIG.503B (4-H-5) OPT:METER (2) (DF40AQH E01)

REF NO.	PART NO.	DESCRIPTION	Q'TY	REMARKS
1	34011-96L00	SET, MULTI GAUGE	1	
2	34112-96L00	.NUT, GAUGE	1	
3	34193-96L00	.BEZEL, GAUGE	1	
4	34211-96L00	.COVER, GAUGE	1	
5	34825-96L00	.PACKING, GAUGE	1	
6	36662-88L10	WIRE, 2 EXTENSION	1	
7	36664-88L00	CONNECTOR, BRANCH	1	
8	34190-88L00	SENSOR ASSY, PAD WHEEL	1	
9	36662-88L20	WIRE, 6 EXTENSION	1	
10	36662-88L30	WIRE, 15 EXTENSION	1	
11	39950-88L00	MODULE ASSY, GPS RECEIVER	1	

FIG.503C

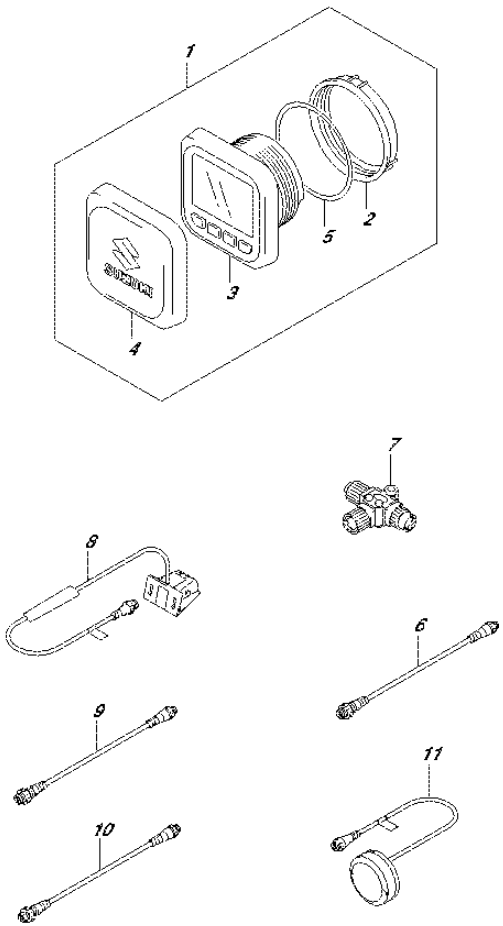

FIG.503C (4-H-6) OPT:METER (2) (DF40ATH E01)

REF NO.	PART NO.	DESCRIPTION	Q'TY	REMARKS
1	34011-96L00	SET, MULTI GAUGE	1	
2	34112-96L00	.NUT, GAUGE	1	
3	34193-96L00	.BEZEL, GAUGE	1	
4	34211-96L00	.COVER, GAUGE	1	
5	34825-96L00	.PACKING, GAUGE	1	
6	36662-88L10	WIRE, 2 EXTENSION	1	
7	36664-88L00	CONNECTOR, BRANCH	1	
8	34190-88L00	SENSOR ASSY, PAD WHEEL	1	
9	36662-88L20	WIRE, 6 EXTENSION	1	
10	36662-88L30	WIRE, 15 EXTENSION	1	
11	39950-88L00	MODULE ASSY, GPS RECEIVER	1	

FIG.503D

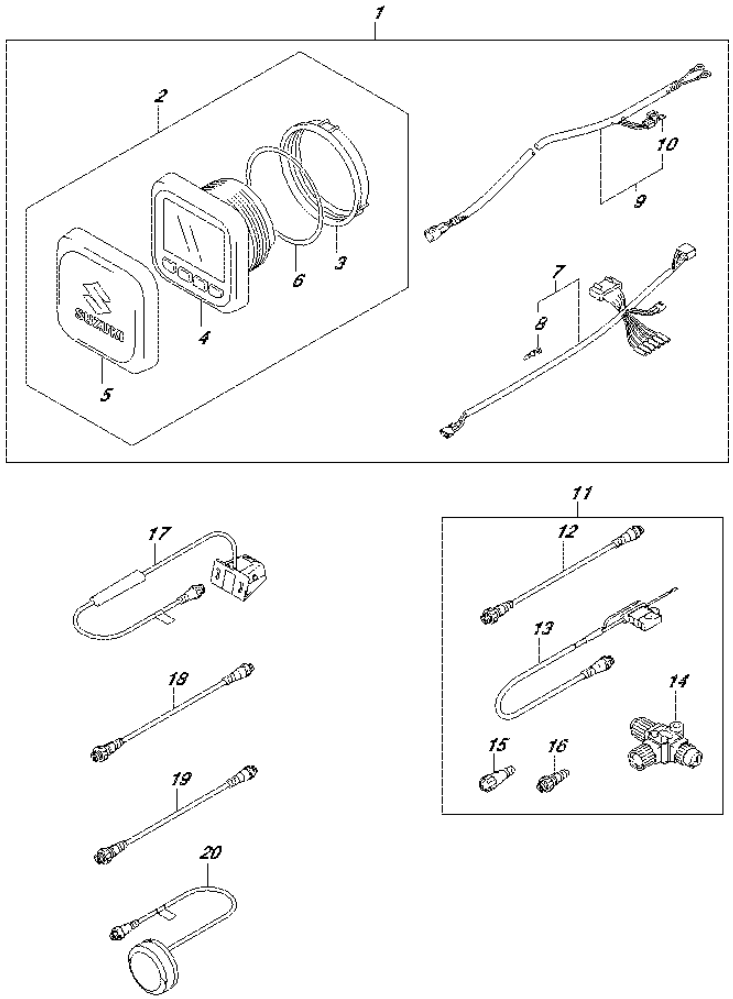

FIG.503D (4-H-7) OPT:METER (2) (DF40AST E34)

REF NO.	PART NO.	DESCRIPTION	Q'TY	REMARKS
1	34000-96L00	KIT, SINGLE GAUGE MECH	1	
2	34011-96L00	.SET, MULTI GAUGE	1	
3	34112-96L00	..NUT, GAUGE	1	
4	34193-96L00	..BEZEL, GAUGE	1	
5	34211-96L00	..COVER, GAUGE	1	
6	34825-96L00	..PACKING, GAUGE	1	
7	36661-96L10	.ADAPTER, GAUGE	1	
8	36615-96300	..TERMINAL	5	
9	36663-98J10	.WIRE, GAUGE POWER	1	
10	09481-05501	..FUSE (5A)	1	
11	36001-88L00	SET, WIRE	1	
12	36662-88L10	.WIRE, 2 EXTENSION	1	
13	36663-88L00	.HARNESS ASSY, NETWORK POWER	1	
14	36664-88L00	.CONNECTOR, BRANCH	1	
15	36665-88L00	.UNIT, RESISTOR FEMALE	1	
16	36665-88L10	.UNIT, RESISTOR MALE	1	
17	34190-88L00	SENSOR ASSY, PAD WHEEL	1	
18	36662-88L20	WIRE, 6 EXTENSION	1	
19	36662-88L30	WIRE, 15 EXTENSION	1	
20	39950-88L00	MODULE ASSY, GPS RECEIVER	1	

FIG.503E

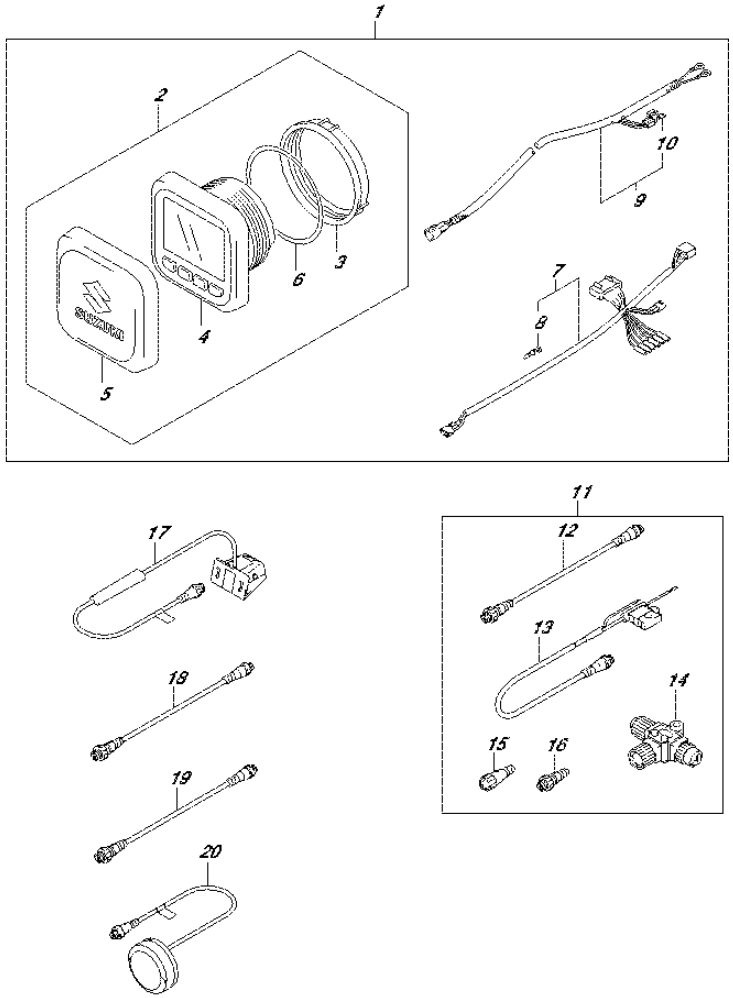

FIG.503E (4-H-8) OPT:METER (2) (DF50A E01)

REF NO.	PART NO.	DESCRIPTION	Q'TY	REMARKS
1	34000-96L00	KIT, SINGLE GAUGE MECH	1	
2	34011-96L00	.SET, MULTI GAUGE	1	
3	34112-96L00	..NUT, GAUGE	1	
4	34193-96L00	..BEZEL, GAUGE	1	
5	34211-96L00	..COVER, GAUGE	1	
6	34825-96L00	..PACKING, GAUGE	1	
7	36661-96L10	.ADAPTER, GAUGE	1	
8	36615-96300	..TERMINAL	5	
9	36663-98J10	.WIRE, GAUGE POWER	1	
10	09481-05501	..FUSE (5A)	1	
11	36001-88L00	SET, WIRE	1	
12	36662-88L10	.WIRE, 2 EXTENSION	1	
13	36663-88L00	.HARNESS ASSY, NETWORK POWER	1	
14	36664-88L00	.CONNECTOR, BRANCH	1	
15	36665-88L00	.UNIT, RESISTOR FEMALE	1	
16	36665-88L10	.UNIT, RESISTOR MALE	1	
17	34190-88L00	SENSOR ASSY, PAD WHEEL	1	
18	36662-88L20	WIRE, 6 EXTENSION	1	
19	36662-88L30	WIRE, 15 EXTENSION	1	
20	39950-88L00	MODULE ASSY, GPS RECEIVER	1	

FIG.503F

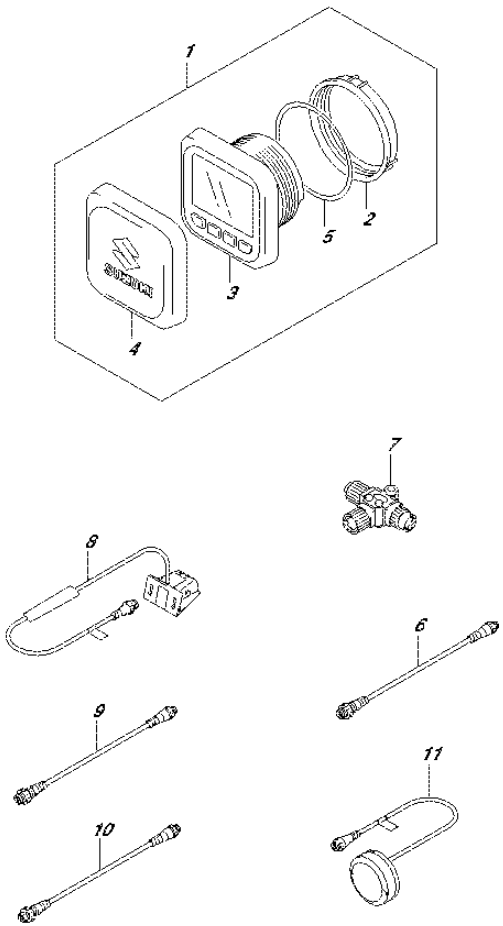

FIG.503F (4-H-9) OPT:METER (2) (DF50ATH E01)

REF NO.	PART NO.	DESCRIPTION	Q'TY	REMARKS
1	34011-96L00	SET, MULTI GAUGE	1	
2	34112-96L00	.NUT, GAUGE	1	
3	34193-96L00	.BEZEL, GAUGE	1	
4	34211-96L00	.COVER, GAUGE	1	
5	34825-96L00	.PACKING, GAUGE	1	
6	36662-88L10	WIRE, 2 EXTENSION	1	
7	36664-88L00	CONNECTOR, BRANCH	1	
8	34190-88L00	SENSOR ASSY, PAD WHEEL	1	
9	36662-88L20	WIRE, 6 EXTENSION	1	
10	36662-88L30	WIRE, 15 EXTENSION	1	
11	39950-88L00	MODULE ASSY, GPS RECEIVER	1	

FIG.503G

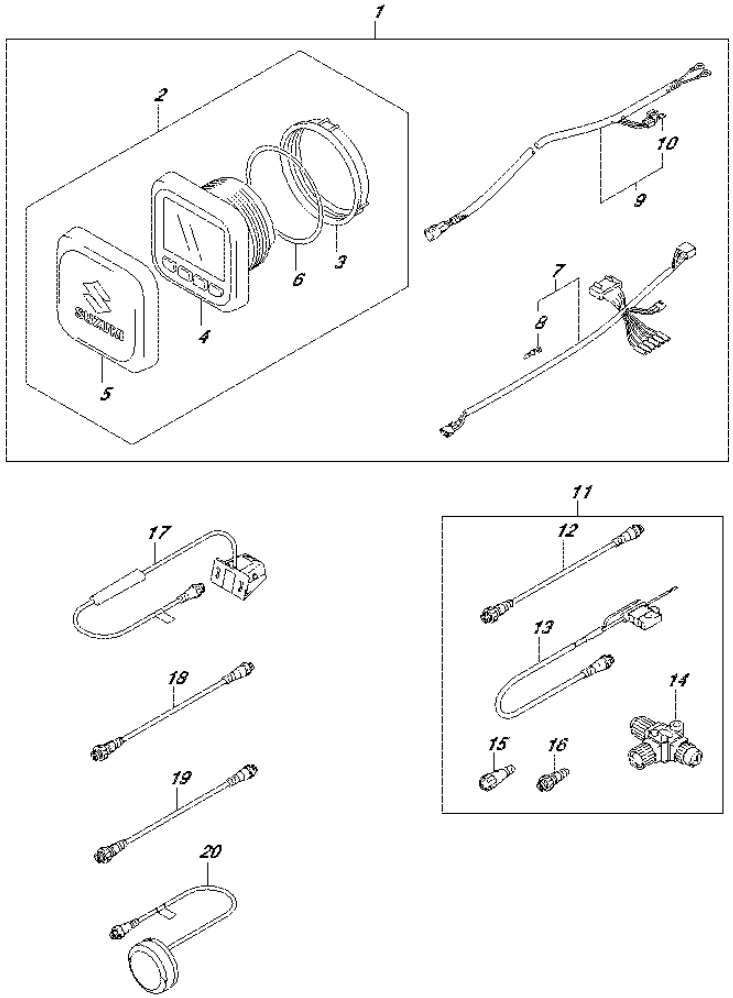

FIG.503G (4-H-10) OPT:METER (2) (DF60A E01)

REF NO.	PART NO.	DESCRIPTION	Q'TY	REMARKS
1	34000-96L00	KIT, SINGLE GAUGE MECH	1	
2	34011-96L00	.SET, MULTI GAUGE	1	
3	34112-96L00	..NUT, GAUGE	1	
4	34193-96L00	..BEZEL, GAUGE	1	
5	34211-96L00	..COVER, GAUGE	1	
6	34825-96L00	..PACKING, GAUGE	1	
7	36661-96L10	.ADAPTER, GAUGE	1	
8	36615-96300	..TERMINAL	5	
9	36663-98J10	.WIRE, GAUGE POWER	1	
10	09481-05501	..FUSE (5A)	1	
11	36001-88L00	SET, WIRE	1	
12	36662-88L10	.WIRE, 2 EXTENSION	1	
13	36663-88L00	.HARNESS ASSY, NETWORK POWER	1	
14	36664-88L00	.CONNECTOR, BRANCH	1	
15	36665-88L00	.UNIT, RESISTOR FEMALE	1	
16	36665-88L10	.UNIT, RESISTOR MALE	1	
17	34190-88L00	SENSOR ASSY, PAD WHEEL	1	
18	36662-88L20	WIRE, 6 EXTENSION	1	
19	36662-88L30	WIRE, 15 EXTENSION	1	
20	39950-88L00	MODULE ASSY, GPS RECEIVER	1	

FIG.503H

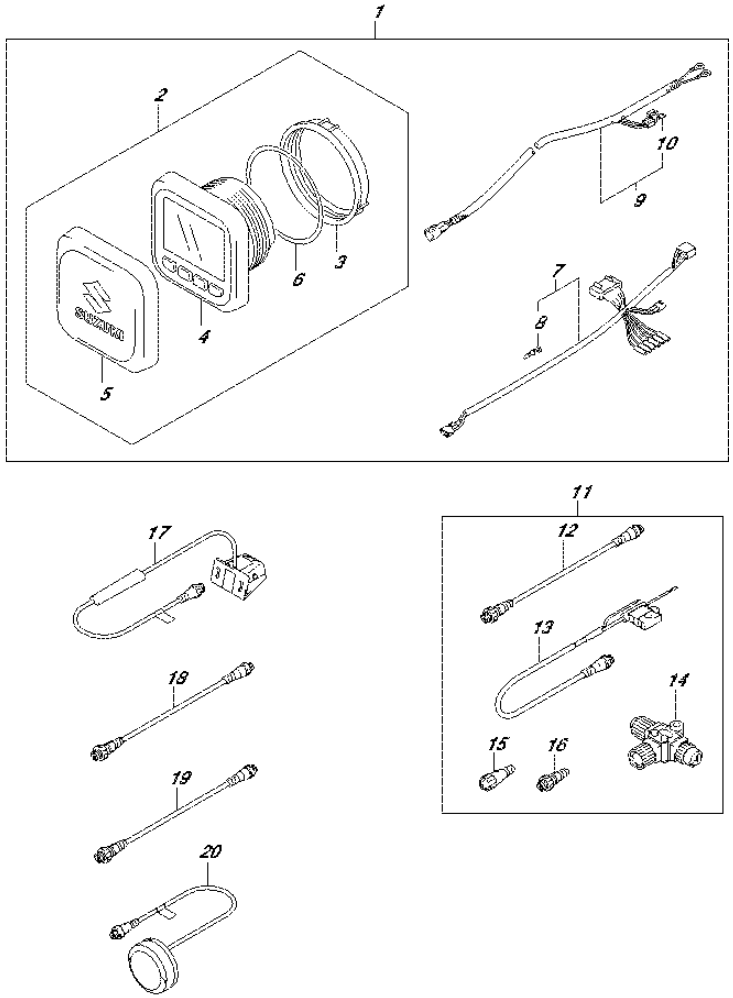

FIG.503H (4-H-11) OPT:METER (2) (DF60A E40)

REF NO.	PART NO.	DESCRIPTION	Q'TY	REMARKS
1	34000-96L00	KIT, SINGLE GAUGE MECH	1	
2	34011-96L00	.SET, MULTI GAUGE	1	
3	34112-96L00	..NUT, GAUGE	1	
4	34193-96L00	..BEZEL, GAUGE	1	
5	34211-96L00	..COVER, GAUGE	1	
6	34825-96L00	..PACKING, GAUGE	1	
7	36661-96L10	.ADAPTER, GAUGE	1	
8	36615-96300	..TERMINAL	5	
9	36663-98J10	.WIRE, GAUGE POWER	1	
10	09481-05501	..FUSE (5A)	1	
11	36001-88L00	SET, WIRE	1	
12	36662-88L10	.WIRE, 2 EXTENSION	1	
13	36663-88L00	.HARNESS ASSY, NETWORK POWER	1	
14	36664-88L00	.CONNECTOR, BRANCH	1	
15	36665-88L00	.UNIT, RESISTOR FEMALE	1	
16	36665-88L10	.UNIT, RESISTOR MALE	1	
17	34190-88L00	SENSOR ASSY, PAD WHEEL	1	
18	36662-88L20	WIRE, 6 EXTENSION	1	
19	36662-88L30	WIRE, 15 EXTENSION	1	
20	39950-88L00	MODULE ASSY, GPS RECEIVER	1	

FIG.503J

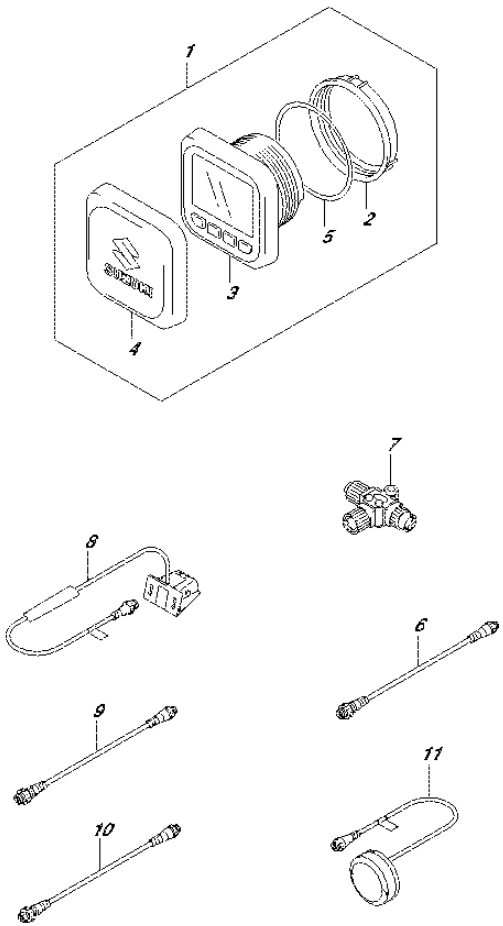

FIG.503J (4-H-12) OPT:METER (2) (DF60AQH E01)

REF NO.	PART NO.	DESCRIPTION	Q'TY	REMARKS
1	34011-96L00	SET, MULTI GAUGE	1	
2	34112-96L00	.NUT, GAUGE	1	
3	34193-96L00	.BEZEL, GAUGE	1	
4	34211-96L00	.COVER, GAUGE	1	
5	34825-96L00	.PACKING, GAUGE	1	
6	36662-88L10	WIRE, 2 EXTENSION	1	
7	36664-88L00	CONNECTOR, BRANCH	1	
8	34190-88L00	SENSOR ASSY, PAD WHEEL	1	
9	36662-88L20	WIRE, 6 EXTENSION	1	
10	36662-88L30	WIRE, 15 EXTENSION	1	
11	39950-88L00	MODULE ASSY, GPS RECEIVER	1	

FIG.503K

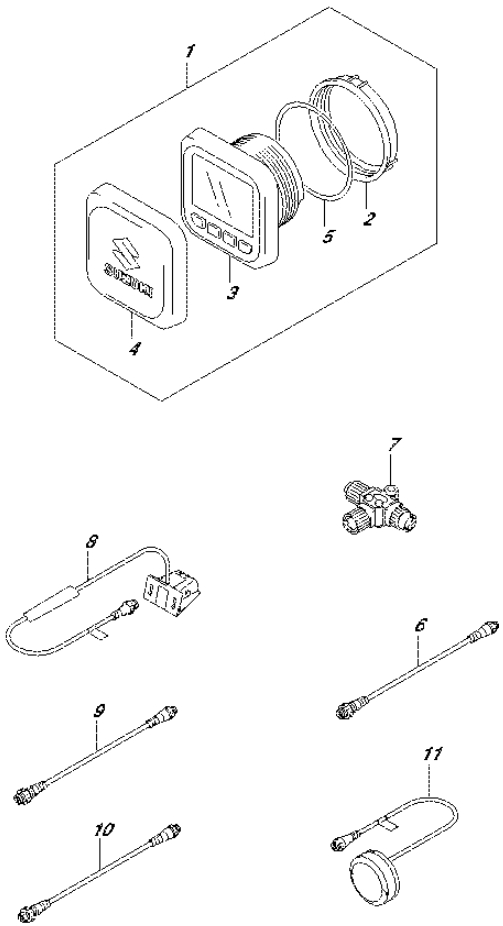

FIG.503K (4-H-13) OPT:METER (2) (DF60AQH E40)

REF NO.	PART NO.	DESCRIPTION	Q'TY	REMARKS
1	34011-96L00	SET, MULTI GAUGE	1	
2	34112-96L00	.NUT, GAUGE	1	
3	34193-96L00	.BEZEL, GAUGE	1	
4	34211-96L00	.COVER, GAUGE	1	
5	34825-96L00	.PACKING, GAUGE	1	
6	36662-88L10	WIRE, 2 EXTENSION	1	
7	36664-88L00	CONNECTOR, BRANCH	1	
8	34190-88L00	SENSOR ASSY, PAD WHEEL	1	
9	36662-88L20	WIRE, 6 EXTENSION	1	
10	36662-88L30	WIRE, 15 EXTENSION	1	
11	39950-88L00	MODULE ASSY, GPS RECEIVER	1	

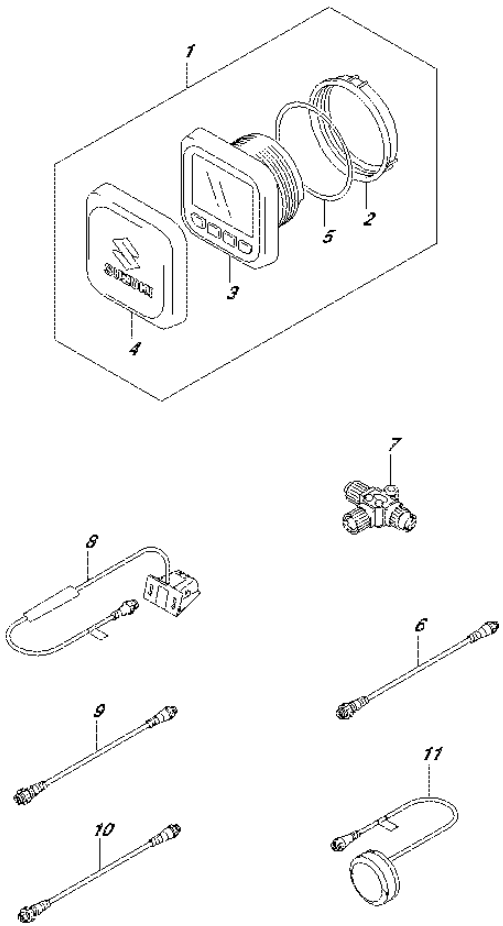

FIG.503L (4-H-14) OPT:METER (2) (DF60ATH E01)

REF NO.	PART NO.	DESCRIPTION	Q'TY	REMARKS
1	34011-96L00	SET, MULTI GAUGE	1	
2	34112-96L00	.NUT, GAUGE	1	
3	34193-96L00	.BEZEL, GAUGE	1	
4	34211-96L00	.COVER, GAUGE	1	
5	34825-96L00	.PACKING, GAUGE	1	
6	36662-88L10	WIRE, 2 EXTENSION	1	
7	36664-88L00	CONNECTOR, BRANCH	1	
8	34190-88L00	SENSOR ASSY, PAD WHEEL	1	
9	36662-88L20	WIRE, 6 EXTENSION	1	
10	36662-88L30	WIRE, 15 EXTENSION	1	
11	39950-88L00	MODULE ASSY, GPS RECEIVER	1	

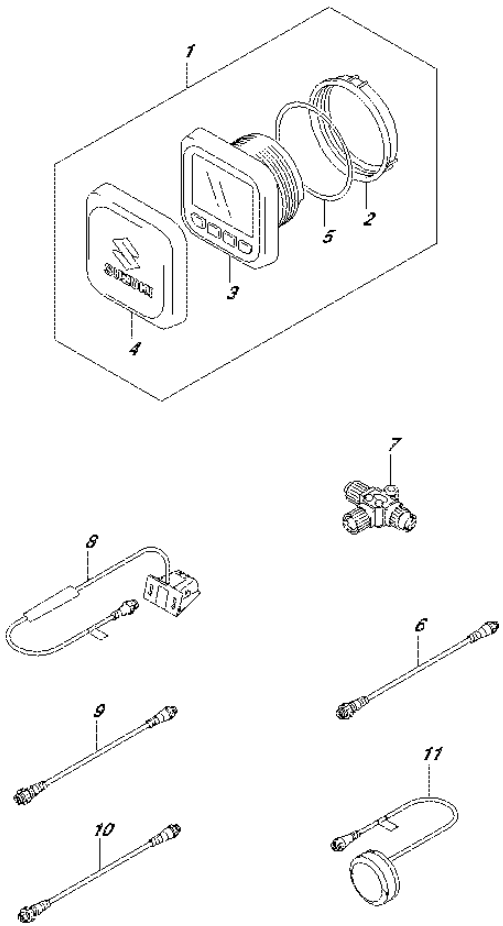

FIG.503M (4-H-15) OPT:METER (2) (DF60ATH E40)

REF NO.	PART NO.	DESCRIPTION	Q'TY	REMARKS
1	34011-96L00	SET, MULTI GAUGE	1	
2	34112-96L00	.NUT, GAUGE	1	
3	34193-96L00	.BEZEL, GAUGE	1	
4	34211-96L00	.COVER, GAUGE	1	
5	34825-96L00	.PACKING, GAUGE	1	
6	36662-88L10	WIRE, 2 EXTENSION	1	
7	36664-88L00	CONNECTOR, BRANCH	1	
8	34190-88L00	SENSOR ASSY, PAD WHEEL	1	
9	36662-88L20	WIRE, 6 EXTENSION	1	
10	36662-88L30	WIRE, 15 EXTENSION	1	
11	39950-88L00	MODULE ASSY, GPS RECEIVER	1	

FIG.503N

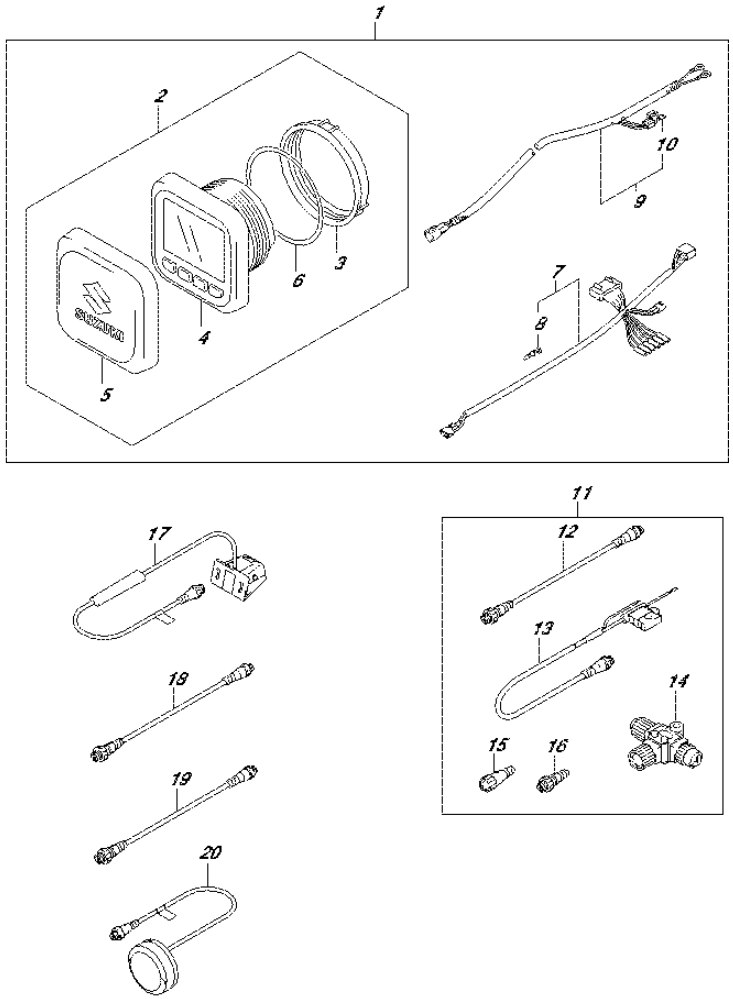

FIG.503N (4-I-2) OPT:METER (2) (DF50AVT E01)

REF NO.	PART NO.	DESCRIPTION	Q'TY	REMARKS
1	34000-96L00	KIT, SINGLE GAUGE MECH	1	
2	34011-96L00	.SET, MULTI GAUGE	1	
3	34112-96L00	..NUT, GAUGE	1	
4	34193-96L00	..BEZEL, GAUGE	1	
5	34211-96L00	..COVER, GAUGE	1	
6	34825-96L00	..PACKING, GAUGE	1	
7	36661-96L10	.ADAPTER, GAUGE	1	
8	36615-96300	..TERMINAL	5	
9	36663-98J10	.WIRE, GAUGE POWER	1	
10	09481-05501	..FUSE (5A)	1	
11	36001-88L00	SET, WIRE	1	
12	36662-88L10	.WIRE, 2 EXTENSION	1	
13	36663-88L00	.HARNESS ASSY, NETWORK POWER	1	
14	36664-88L00	.CONNECTOR, BRANCH	1	
15	36665-88L00	.UNIT, RESISTOR FEMALE	1	
16	36665-88L10	.UNIT, RESISTOR MALE	1	
17	34190-88L00	SENSOR ASSY, PAD WHEEL	1	
18	36662-88L20	WIRE, 6 EXTENSION	1	
19	36662-88L30	WIRE, 15 EXTENSION	1	
20	39950-88L00	MODULE ASSY, GPS RECEIVER	1	

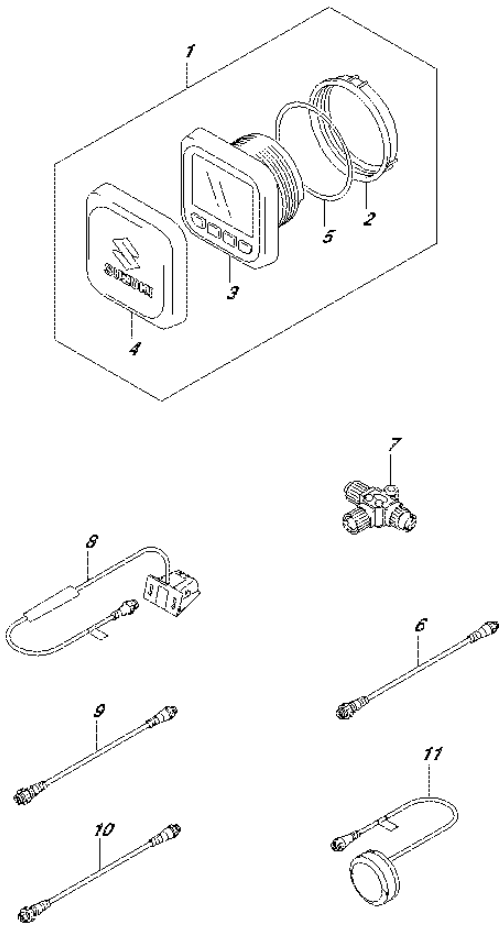

FIG.503P (4-I-3) OPT:METER (2) (DF50AVTH E01)

REF NO.	PART NO.	DESCRIPTION	Q'TY	REMARKS
1	34011-96L00	SET, MULTI GAUGE	1	
2	34112-96L00	.NUT, GAUGE	1	
3	34193-96L00	.BEZEL, GAUGE	1	
4	34211-96L00	.COVER, GAUGE	1	
5	34825-96L00	.PACKING, GAUGE	1	
6	36662-88L10	WIRE, 2 EXTENSION	1	
7	36664-88L00	CONNECTOR, BRANCH	1	
8	34190-88L00	SENSOR ASSY, PAD WHEEL	1	
9	36662-88L20	WIRE, 6 EXTENSION	1	
10	36662-88L30	WIRE, 15 EXTENSION	1	
11	39950-88L00	MODULE ASSY, GPS RECEIVER	1	

FIG.503R

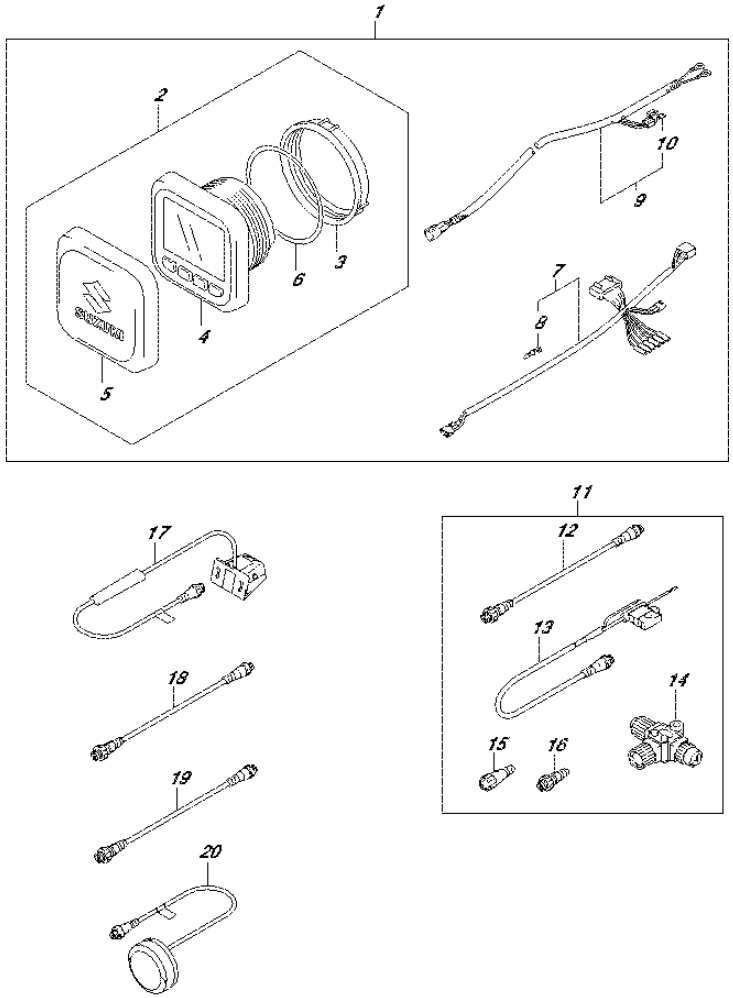

FIG.503R (4-I-4) OPT:METER (2) (DF60AVT E01)

REF NO.	PART NO.	DESCRIPTION	Q'TY	REMARKS
1	34000-96L00	KIT, SINGLE GAUGE MECH	1	
2	34011-96L00	.SET, MULTI GAUGE	1	
3	34112-96L00	..NUT, GAUGE	1	
4	34193-96L00	..BEZEL, GAUGE	1	
5	34211-96L00	..COVER, GAUGE	1	
6	34825-96L00	..PACKING, GAUGE	1	
7	36661-96L10	.ADAPTER, GAUGE	1	
8	36615-96300	..TERMINAL	5	
9	36663-98J10	.WIRE, GAUGE POWER	1	
10	09481-05501	..FUSE (5A)	1	
11	36001-88L00	SET, WIRE	1	
12	36662-88L10	.WIRE, 2 EXTENSION	1	
13	36663-88L00	.HARNESS ASSY, NETWORK POWER	1	
14	36664-88L00	.CONNECTOR, BRANCH	1	
15	36665-88L00	.UNIT, RESISTOR FEMALE	1	
16	36665-88L10	.UNIT, RESISTOR MALE	1	
17	34190-88L00	SENSOR ASSY, PAD WHEEL	1	
18	36662-88L20	WIRE, 6 EXTENSION	1	
19	36662-88L30	WIRE, 15 EXTENSION	1	
20	39950-88L00	MODULE ASSY, GPS RECEIVER	1	

FIG.503S

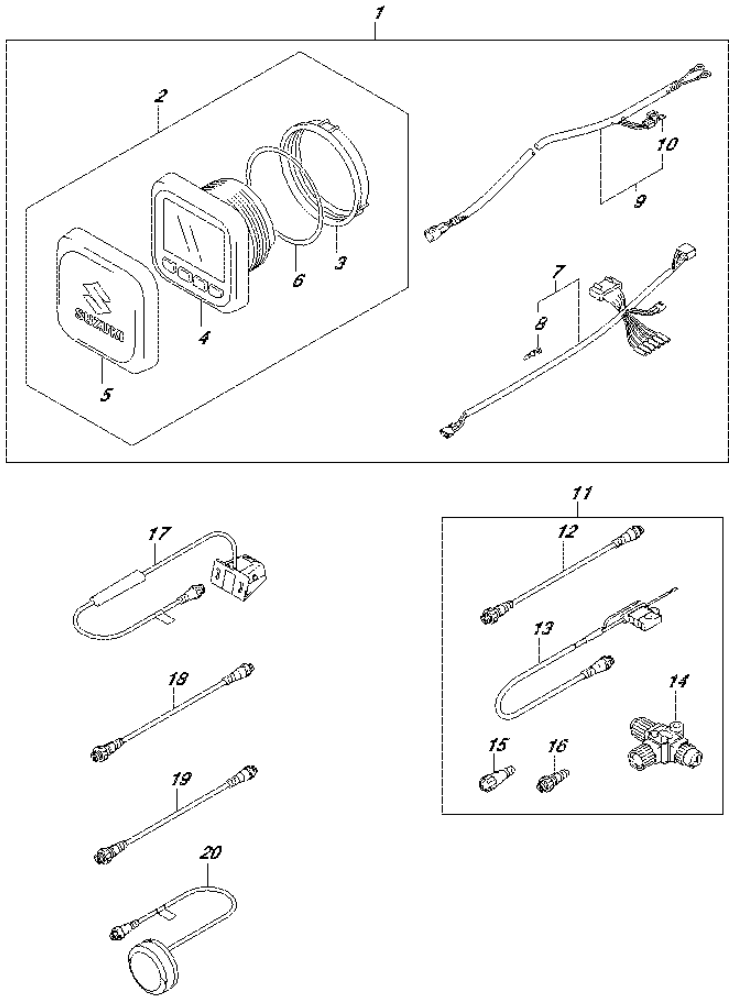

FIG.503S (4-I-5) OPT:METER (2) (DF60AVT E40)

REF NO.	PART NO.	DESCRIPTION	Q'TY	REMARKS
1	34000-96L00	KIT, SINGLE GAUGE MECH	1	
2	34011-96L00	.SET, MULTI GAUGE	1	
3	34112-96L00	..NUT, GAUGE	1	
4	34193-96L00	..BEZEL, GAUGE	1	
5	34211-96L00	..COVER, GAUGE	1	
6	34825-96L00	..PACKING, GAUGE	1	
7	36661-96L10	.ADAPTER, GAUGE	1	
8	36615-96300	..TERMINAL	5	
9	36663-98J10	.WIRE, GAUGE POWER	1	
10	09481-05501	..FUSE (5A)	1	
11	36001-88L00	SET, WIRE	1	
12	36662-88L10	.WIRE, 2 EXTENSION	1	
13	36663-88L00	.HARNESS ASSY, NETWORK POWER	1	
14	36664-88L00	.CONNECTOR, BRANCH	1	
15	36665-88L00	.UNIT, RESISTOR FEMALE	1	
16	36665-88L10	.UNIT, RESISTOR MALE	1	
17	34190-88L00	SENSOR ASSY, PAD WHEEL	1	
18	36662-88L20	WIRE, 6 EXTENSION	1	
19	36662-88L30	WIRE, 15 EXTENSION	1	
20	39950-88L00	MODULE ASSY, GPS RECEIVER	1	

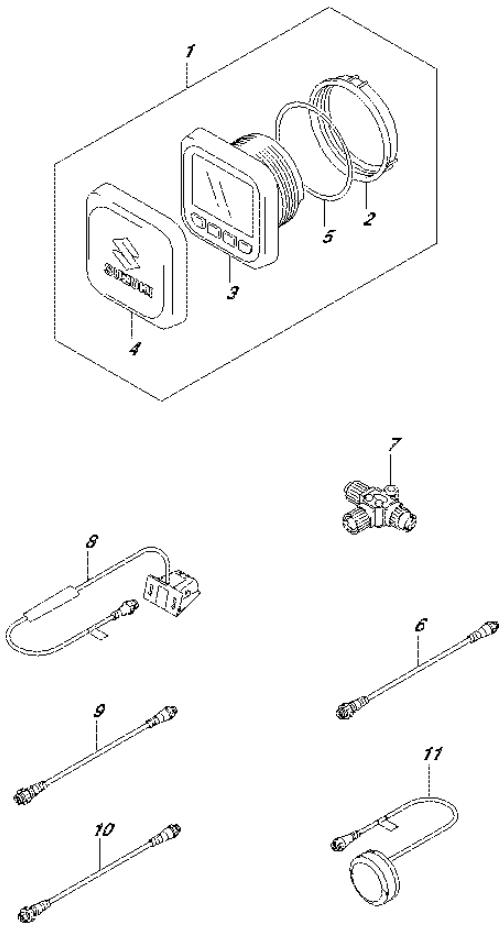

FIG.503T (4-I-6) OPT:METER (2) (DF60AVTH E01)

REF NO.	PART NO.	DESCRIPTION	Q'TY	REMARKS
1	34011-96L00	SET, MULTI GAUGE	1	
2	34112-96L00	.NUT, GAUGE	1	
3	34193-96L00	.BEZEL, GAUGE	1	
4	34211-96L00	.COVER, GAUGE	1	
5	34825-96L00	.PACKING, GAUGE	1	
6	36662-88L10	WIRE, 2 EXTENSION	1	
7	36664-88L00	CONNECTOR, BRANCH	1	
8	34190-88L00	SENSOR ASSY, PAD WHEEL	1	
9	36662-88L20	WIRE, 6 EXTENSION	1	
10	36662-88L30	WIRE, 15 EXTENSION	1	
11	39950-88L00	MODULE ASSY, GPS RECEIVER	1	

FIG.503U

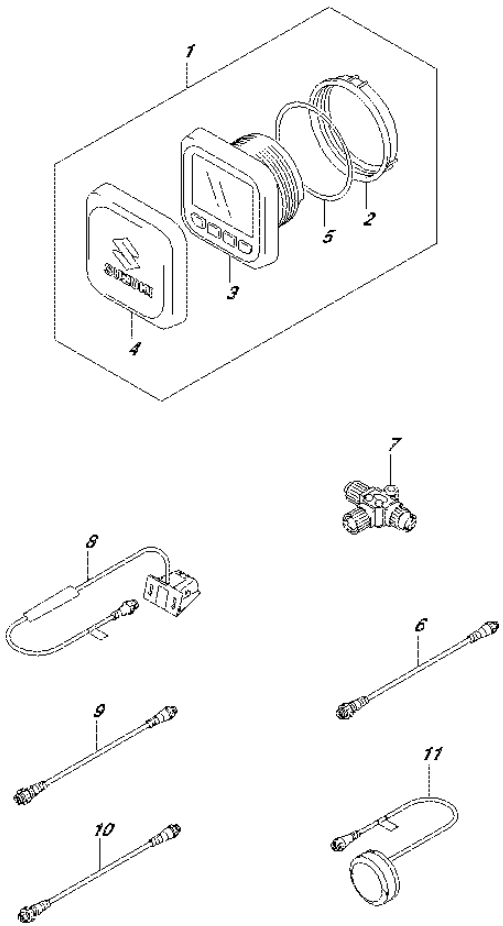

FIG.503U (4-I-7) OPT:METER (2) (DF60AVTH E40)

REF NO.	PART NO.	DESCRIPTION	Q'TY	REMARKS
1	34011-96L00	SET, MULTI GAUGE	1	
2	34112-96L00	.NUT, GAUGE	1	
3	34193-96L00	.BEZEL, GAUGE	1	
4	34211-96L00	.COVER, GAUGE	1	
5	34825-96L00	.PACKING, GAUGE	1	
6	36662-88L10	WIRE, 2 EXTENSION	1	
7	36664-88L00	CONNECTOR, BRANCH	1	
8	34190-88L00	SENSOR ASSY, PAD WHEEL	1	
9	36662-88L20	WIRE, 6 EXTENSION	1	
10	36662-88L30	WIRE, 15 EXTENSION	1	
11	39950-88L00	MODULE ASSY, GPS RECEIVER	1	

FIG.507A

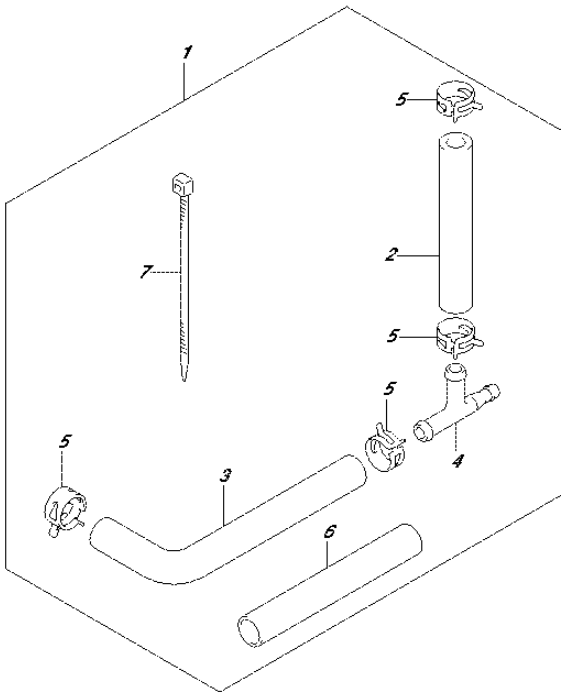

FIG.507A (4-I-8) OPT:WATER PRESSURE GAUGE SUB KIT

REF NO.	PART NO.	DESCRIPTION	Q'TY	REMARKS
1	34660-90J02	WATER PRESSURE GAUGE SUB KIT	1	
2	09352-50903-600	.HOSE (5X9X600)	1	L:600->160
3	09352-50903-600	.HOSE (5X9X600)	1	L:600->210
4	09367-06006	.3 WAY	1	
5	09401-08413	.CLIP	4	
6	18498-99EA0	.PROTECTOR (L:80)	1	
7	09407-25402	.CLAMP (L:250)	1	

FIG.508A

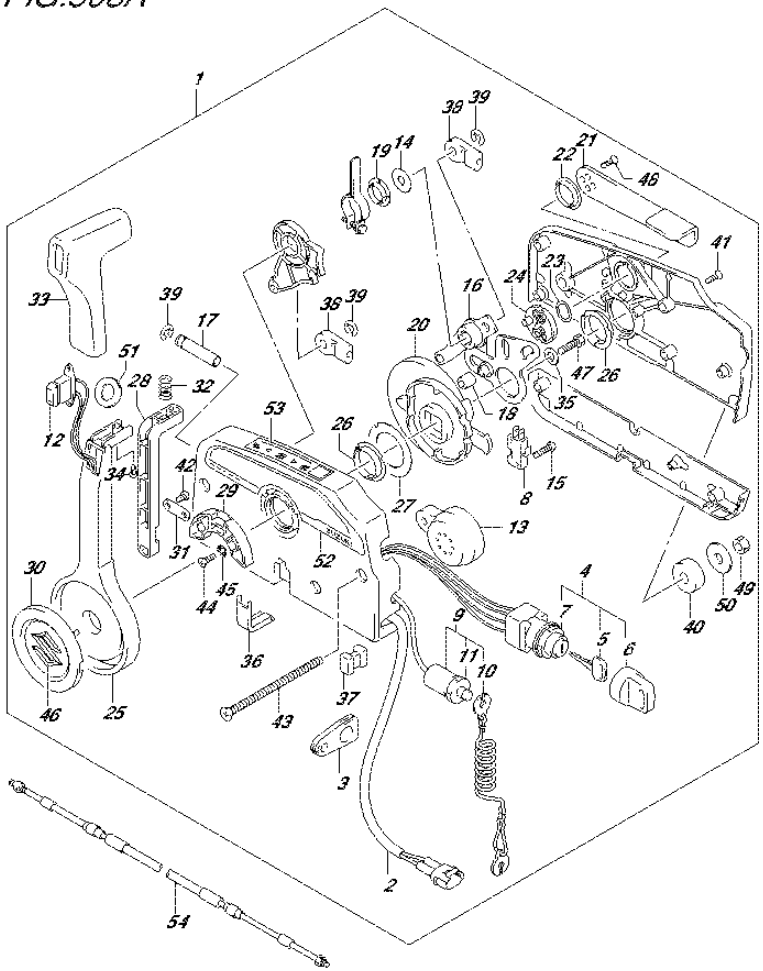

FIG.508A (4-I-9) OPT:REMOTE CONTROL (DF40A E01)

REF NO.	PART NO.	DESCRIPTION	Q'TY	REMARKS
1	67200-93J50	REMOTE CONTROL ASSY	1	
2	36646-93J01	.WIRE ASSY, PTT SW ADAPTER	1	
3	36628-92E00	.GROMMET, WIRE HARNESS	1	
4	37110-93J11	.SWITCH ASSY, IGNITION	1	
5-1	37141-99E00	..KEY (931)	2	
5-2	37141-99E10	..KEY (932)	2	
5-3	37141-99E20	..KEY (933)	2	
5-4	37141-99E30	..KEY (934)	2	
5-5	37141-99E40	..KEY (935)	2	
5-6	37141-99E50	..KEY (936)	2	
5-7	37141-99E60	..KEY (937)	2	
5-8	37141-99E70	..KEY (938)	2	
5-9	37141-99E80	..KEY (939)	2	
5-10	37141-99E90	..KEY (940)	2	
5-11	37141-99EA0	..KEY (941)	2	
5-12	37141-99EB0	..KEY (942)	2	
6	37143-99E00	..CAP, KEY	2	
7	37149-93J00	..CAP CYLINDER BODY	1	
8	37721-93J91	.SWITCH, NEUTRAL	1	
9	37820-93J04	.SWITCH ASSY, EMERGENCY	1	
10	37823-92E01	..PLATE	1	
11	37826-92J00	..NUT	1	
12	37850-90J05	.SWITCH ASSY, PTT	1	
13	38500-93J90	.BUZZER	1	
14	67212-95600	.WASHER	1	
15	67296-92E11	.SCREW, NEUTRAL SW	2	
16	67220-95630	.PLATE ASSY	1	
17	67223-99E10	.KNOB, BRAKE ADJ	1	
18	67229-95600	.ROLLER	1	
19	67232-95600	.BUSH	1	
20	67238-87D00	.GEAR, DRIVE	1	
21	67241-99E10	.LEVER, FREE THROTTLE	1	
22	67243-95600	.BUSH	1	
23	67244-95600	.WASHER, WAVE	1	

FIG.508A

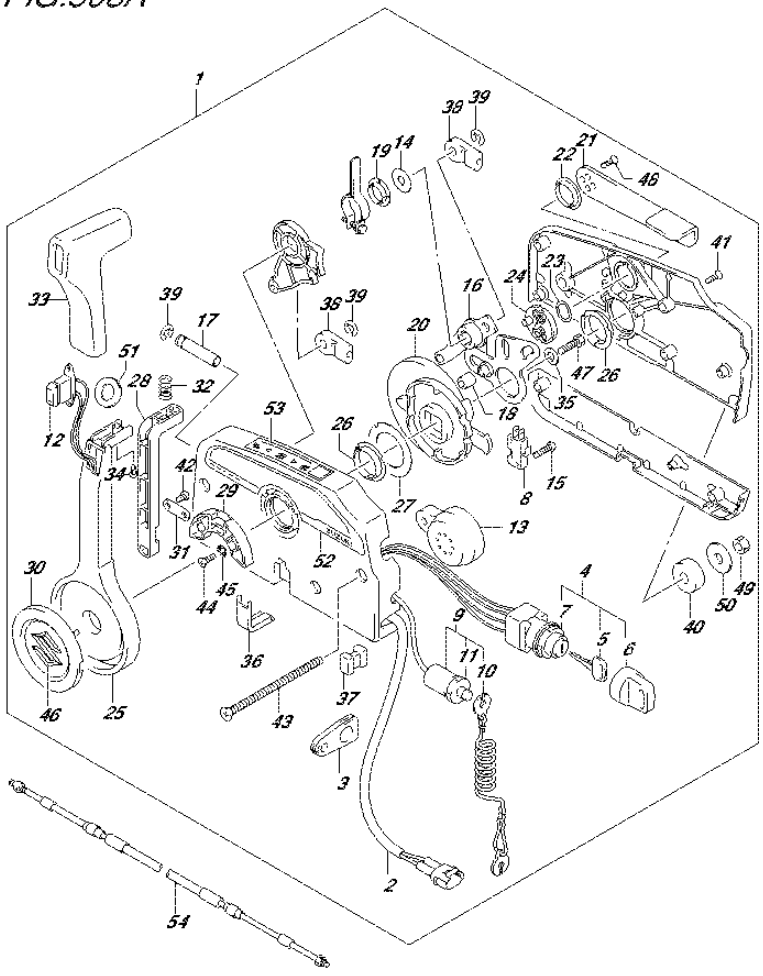

FIG.508A (4-I-10) OPT:REMOTE CONTROL (DF40A E01)

REF NO.	PART NO.	DESCRIPTION	Q'TY	REMARKS
24	67245-95600	.DRUM, FREE THROTTLE	1	
25	67251-99E20	.LEVER, HANDLE	1	
26	67252-95600	.BUSH	2	
27	67253-95600	.WASHER	1	
28	67255-99E10	.ARM, LOCK	1	
29	67256-95600	.HOLDER, NEUT LOCK	1	
30	67257-99E10	.CAP, LEVER	1	
31	67258-99E00	.BRACKET, LOCK ARM	1	
32	67259-87D00	.SPRING, NEUTRAL ARM	1	
33	67261-99E10	.GRIP	1	
34	67296-94310	.SCREW	1	
35	67264-95600	.WASHER	1	
36	67267-93J00	.COVER, WIRE	1	
37	67273-95600	.SPACER	1	
38	67275-95600	.END, CABLE	2	
39	67292-94300	.E RING	3	
40	67294-95600	.SPACER	3	
41	67296-90J00	.SCREW	5	
42	67296-94300	.SCREW	2	
43	67296-95600	.SCREW	3	
44	67296-95610	.SCREW	2	
45	67297-95600	.WASHER	2	
46	77811-54GB0-0PG	.EMBLEM, REAR MARK S (CHROME)	1	
47	09100-08232	.BOLT (8X30)	1	
48	09126-05003	.SCREW (5X12)	2	
49	09140-06020	.NUT	3	
50	09160-06104	.WASHER (6.5X24X2)	3	
51	37859-90J00	.SPACER	1	
52	67282-94L00	.DECAL, REMOCON SIDE	1	
53	67284-94L00	.MARK, HANDLE LEVER	1	

FIG.508A

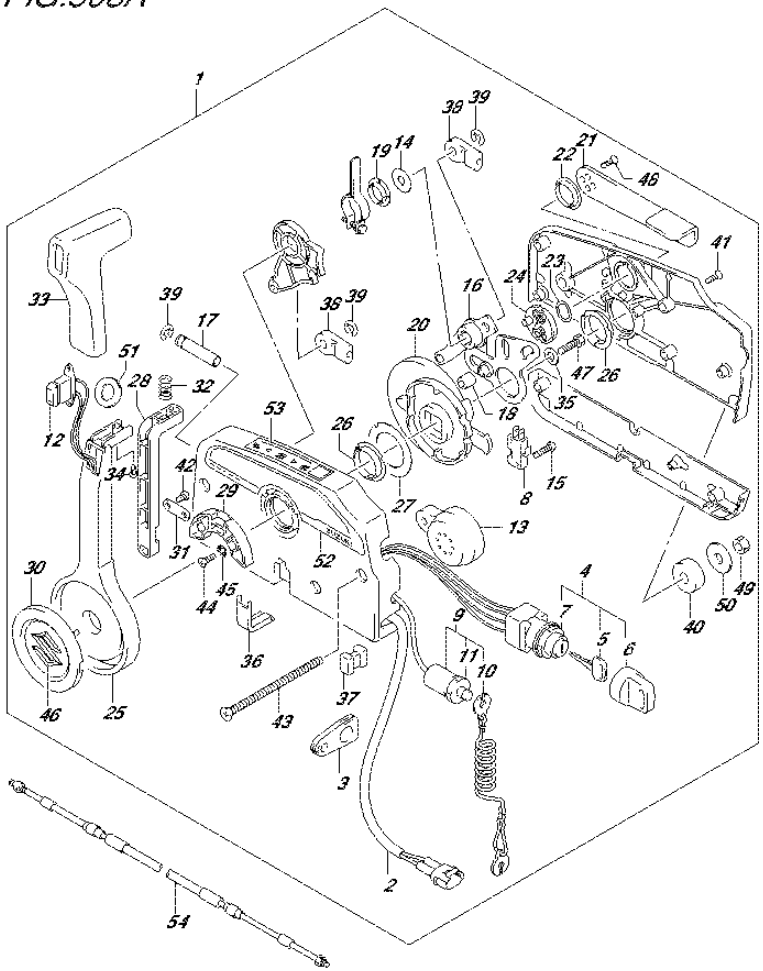

FIG.508A (4-I-11) OPT:REMOTE CONTROL (DF40A E01)

REF NO.	PART NO.	DESCRIPTION	Q'TY	REMARKS
54-1	67320-93J00	CABLE, REMOCON 8F (2.4M)	1	
54-2	67320-93J10	CABLE, REMOCON 10F (3.1M)	1	
54-3	67320-93J20	CABLE, REMOCON 12F (3.7M)	1	
54-4	67320-93J30	CABLE, REMOCON 14F (4.2M)	1	
54-5	67320-93J40	CABLE, REMOCON 16F (4.8M)	1	
54-6	67320-93J50	CABLE, REMOCON 18F (5.4M)	1	
54-7	67320-93J60	CABLE, REMOCON 20F (6.1M)	1	
54-8	67320-93J70	CABLE, REMOCON 22F (6.7M)	1	
54-9	67320-93J80	CABLE, REMOCON 24F (7.3M)	1	

FIG.508B

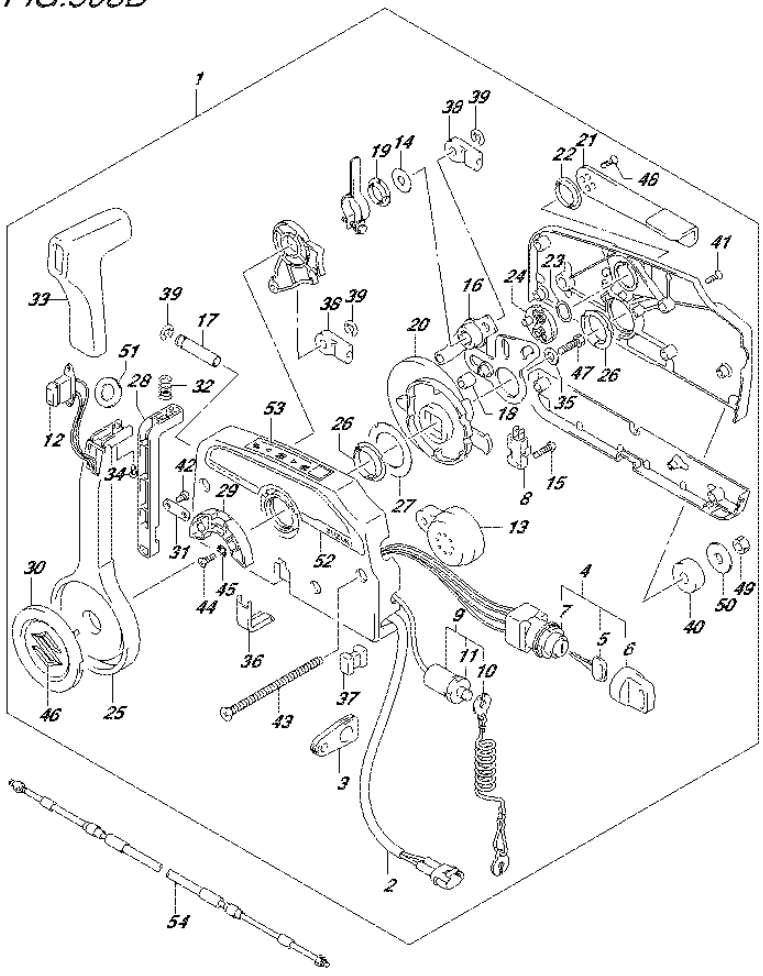

FIG.508B (4-I-12) OPT:REMOTE CONTROL (DF40AST E34)

REF NO.	PART NO.	DESCRIPTION	Q'TY	REMARKS
1	67200-93J50	REMOTE CONTROL ASSY	1	
2	36646-93J01	.WIRE ASSY, PTT SW ADAPTER	1	
3	36628-92E00	.GROMMET, WIRE HARNESS	1	
4	37110-93J11	.SWITCH ASSY, IGNITION	1	
5-1	37141-99E00	..KEY (931)	2	
5-2	37141-99E10	..KEY (932)	2	
5-3	37141-99E20	..KEY (933)	2	
5-4	37141-99E30	..KEY (934)	2	
5-5	37141-99E40	..KEY (935)	2	
5-6	37141-99E50	..KEY (936)	2	
5-7	37141-99E60	..KEY (937)	2	
5-8	37141-99E70	..KEY (938)	2	
5-9	37141-99E80	..KEY (939)	2	
5-10	37141-99E90	..KEY (940)	2	
5-11	37141-99EA0	..KEY (941)	2	
5-12	37141-99EB0	..KEY (942)	2	
6	37143-99E00	..CAP, KEY	2	
7	37149-93J00	..CAP CYLINDER BODY	1	
8	37721-93J91	.SWITCH, NEUTRAL	1	
9	37820-93J04	.SWITCH ASSY, EMERGENCY	1	
10	37823-92E01	..PLATE	1	
11	37826-92J00	..NUT	1	
12	37850-90J05	.SWITCH ASSY, PTT	1	
13	38500-93J90	.BUZZER	1	
14	67212-95600	.WASHER	1	
15	67296-92E11	.SCREW, NEUTRAL SW	2	
16	67220-95630	.PLATE ASSY	1	
17	67223-99E10	.KNOB, BRAKE ADJ	1	
18	67229-95600	.ROLLER	1	
19	67232-95600	.BUSH	1	
20	67238-87D00	.GEAR, DRIVE	1	
21	67241-99E10	.LEVER, FREE THROTTLE	1	
22	67243-95600	.BUSH	1	
23	67244-95600	.WASHER, WAVE	1	

FIG.508B

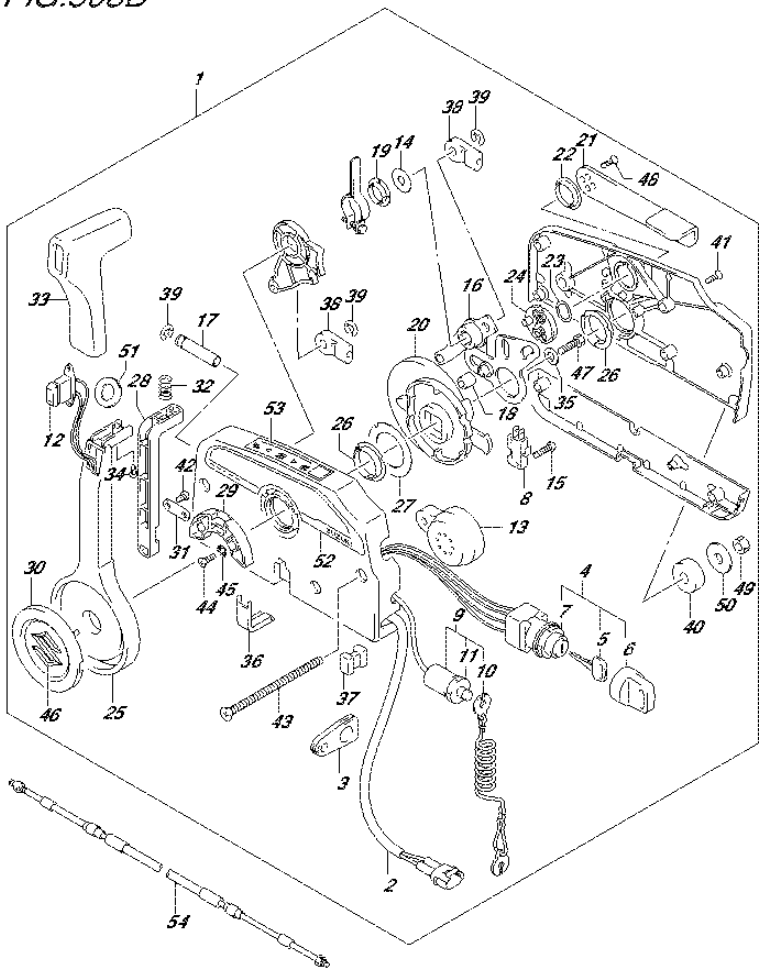

FIG.508B (4-I-13) OPT:REMOTE CONTROL (DF40AST E34)

REF NO.	PART NO.	DESCRIPTION	Q'TY	REMARKS
24	67245-95600	.DRUM, FREE THROTTLE	1	
25	67251-99E20	.LEVER, HANDLE	1	
26	67252-95600	.BUSH	2	
27	67253-95600	.WASHER	1	
28	67255-99E10	.ARM, LOCK	1	
29	67256-95600	.HOLDER, NEUT LOCK	1	
30	67257-99E10	.CAP, LEVER	1	
31	67258-99E00	.BRACKET, LOCK ARM	1	
32	67259-87D00	.SPRING, NEUTRAL ARM	1	
33	67261-99E10	.GRIP	1	
34	67296-94310	.SCREW	1	
35	67264-95600	.WASHER	1	
36	67267-93J00	.COVER, WIRE	1	
37	67273-95600	.SPACER	1	
38	67275-95600	.END, CABLE	2	
39	67292-94300	.E RING	3	
40	67294-95600	.SPACER	3	
41	67296-90J00	.SCREW	5	
42	67296-94300	.SCREW	2	
43	67296-95600	.SCREW	3	
44	67296-95610	.SCREW	2	
45	67297-95600	.WASHER	2	
46	77811-54GB0-0PG	.EMBLEM, REAR MARK S (CHROME)	1	
47	09100-08232	.BOLT (8X30)	1	
48	09126-05003	.SCREW (5X12)	2	
49	09140-06020	.NUT	3	
50	09160-06104	.WASHER (6.5X24X2)	3	
51	37859-90J00	.SPACER	1	
52	67282-94L00	.DECAL, REMOCON SIDE	1	
53	67284-94L00	.MARK, HANDLE LEVER	1	

FIG.508B

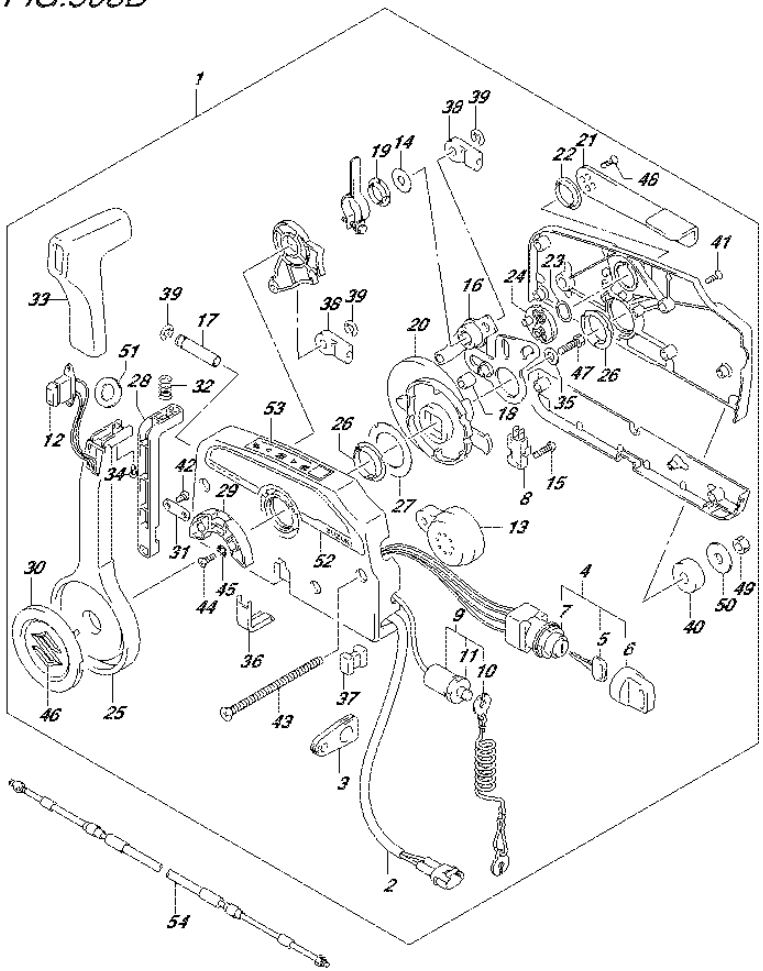

FIG.508B (4-I-14) OPT:REMOTE CONTROL (DF40AST E34)

REF NO.	PART NO.	DESCRIPTION	Q'TY	REMARKS
54-1	67320-93J00	CABLE, REMOCON 8F (2.4M)	1	
54-2	67320-93J10	CABLE, REMOCON 10F (3.1M)	1	
54-3	67320-93J20	CABLE, REMOCON 12F (3.7M)	1	
54-4	67320-93J30	CABLE, REMOCON 14F (4.2M)	1	
54-5	67320-93J40	CABLE, REMOCON 16F (4.8M)	1	
54-6	67320-93J50	CABLE, REMOCON 18F (5.4M)	1	
54-7	67320-93J60	CABLE, REMOCON 20F (6.1M)	1	
54-8	67320-93J70	CABLE, REMOCON 22F (6.7M)	1	
54-9	67320-93J80	CABLE, REMOCON 24F (7.3M)	1	

FIG.508C

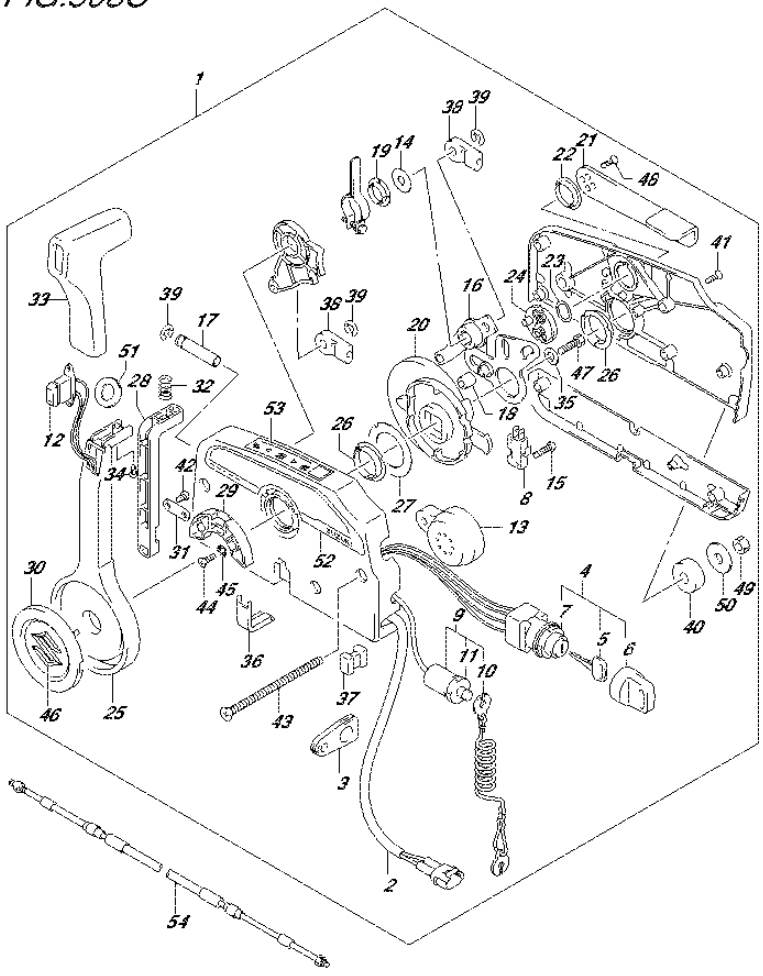

FIG.508C (4-I-15) OPT:REMOTE CONTROL (DF50A E01)

REF NO.	PART NO.	DESCRIPTION	Q'TY	REMARKS
1	67200-93J50	REMOTE CONTROL ASSY	1	
2	36646-93J01	.WIRE ASSY, PTT SW ADAPTER	1	
3	36628-92E00	.GROMMET, WIRE HARNESS	1	
4	37110-93J11	.SWITCH ASSY, IGNITION	1	
5-1	37141-99E00	..KEY (931)	2	
5-2	37141-99E10	..KEY (932)	2	
5-3	37141-99E20	..KEY (933)	2	
5-4	37141-99E30	..KEY (934)	2	
5-5	37141-99E40	..KEY (935)	2	
5-6	37141-99E50	..KEY (936)	2	
5-7	37141-99E60	..KEY (937)	2	
5-8	37141-99E70	..KEY (938)	2	
5-9	37141-99E80	..KEY (939)	2	
5-10	37141-99E90	..KEY (940)	2	
5-11	37141-99EA0	..KEY (941)	2	
5-12	37141-99EB0	..KEY (942)	2	
6	37143-99E00	..CAP, KEY	2	
7	37149-93J00	..CAP CYLINDER BODY	1	
8	37721-93J91	.SWITCH, NEUTRAL	1	
9	37820-93J04	.SWITCH ASSY, EMERGENCY	1	
10	37823-92E01	..PLATE	1	
11	37826-92J00	..NUT	1	
12	37850-90J05	.SWITCH ASSY, PTT	1	
13	38500-93J90	.BUZZER	1	
14	67212-95600	.WASHER	1	
15	67296-92E11	.SCREW, NEUTRAL SW	2	
16	67220-95630	.PLATE ASSY	1	
17	67223-99E10	.KNOB, BRAKE ADJ	1	
18	67229-95600	.ROLLER	1	
19	67232-95600	.BUSH	1	
20	67238-87D00	.GEAR, DRIVE	1	
21	67241-99E10	.LEVER, FREE THROTTLE	1	
22	67243-95600	.BUSH	1	
23	67244-95600	.WASHER, WAVE	1	

FIG.508C

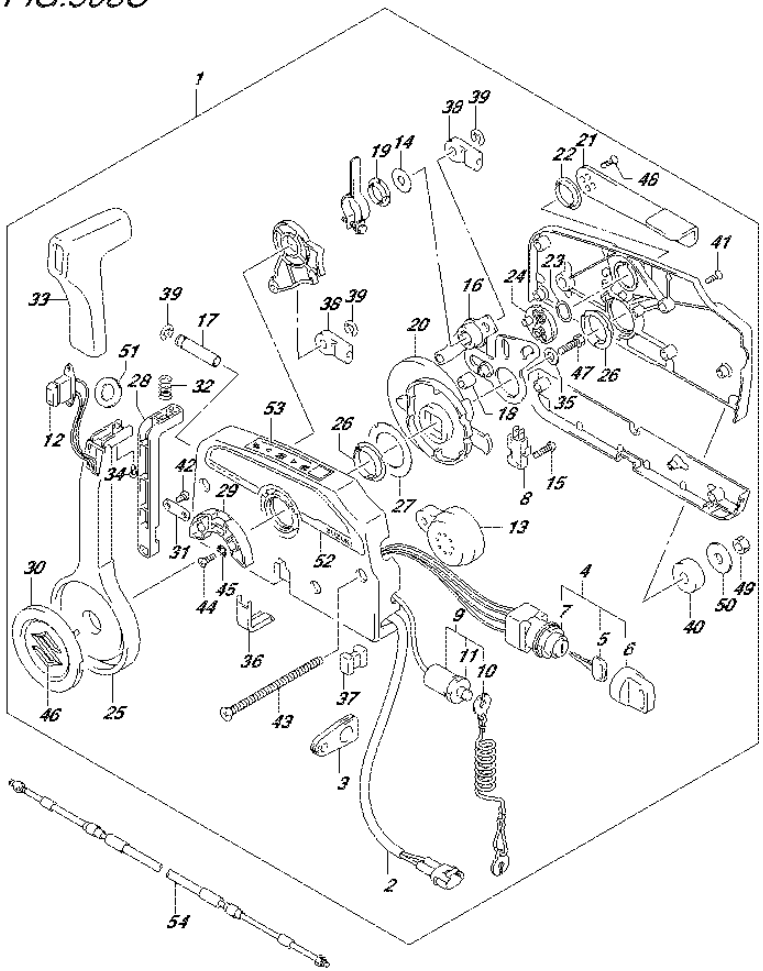

FIG.508C (4-J-2) OPT:REMOTE CONTROL (DF50A E01)

REF NO.	PART NO.	DESCRIPTION	Q'TY	REMARKS
24	67245-95600	.DRUM, FREE THROTTLE	1	
25	67251-99E20	.LEVER, HANDLE	1	
26	67252-95600	.BUSH	2	
27	67253-95600	.WASHER	1	
28	67255-99E10	.ARM, LOCK	1	
29	67256-95600	.HOLDER, NEUT LOCK	1	
30	67257-99E10	.CAP, LEVER	1	
31	67258-99E00	.BRACKET, LOCK ARM	1	
32	67259-87D00	.SPRING, NEUTRAL ARM	1	
33	67261-99E10	.GRIP	1	
34	67296-94310	.SCREW	1	
35	67264-95600	.WASHER	1	
36	67267-93J00	.COVER, WIRE	1	
37	67273-95600	.SPACER	1	
38	67275-95600	.END, CABLE	2	
39	67292-94300	.E RING	3	
40	67294-95600	.SPACER	3	
41	67296-90J00	.SCREW	5	
42	67296-94300	.SCREW	2	
43	67296-95600	.SCREW	3	
44	67296-95610	.SCREW	2	
45	67297-95600	.WASHER	2	
46	77811-54GB0-0PG	.EMBLEM, REAR MARK S (CHROME)	1	
47	09100-08232	.BOLT (8X30)	1	
48	09126-05003	.SCREW (5X12)	2	
49	09140-06020	.NUT	3	
50	09160-06104	.WASHER (6.5X24X2)	3	
51	37859-90J00	.SPACER	1	
52	67282-94L00	.DECAL, REMOCON SIDE	1	
53	67284-94L00	.MARK, HANDLE LEVER	1	

FIG.508C

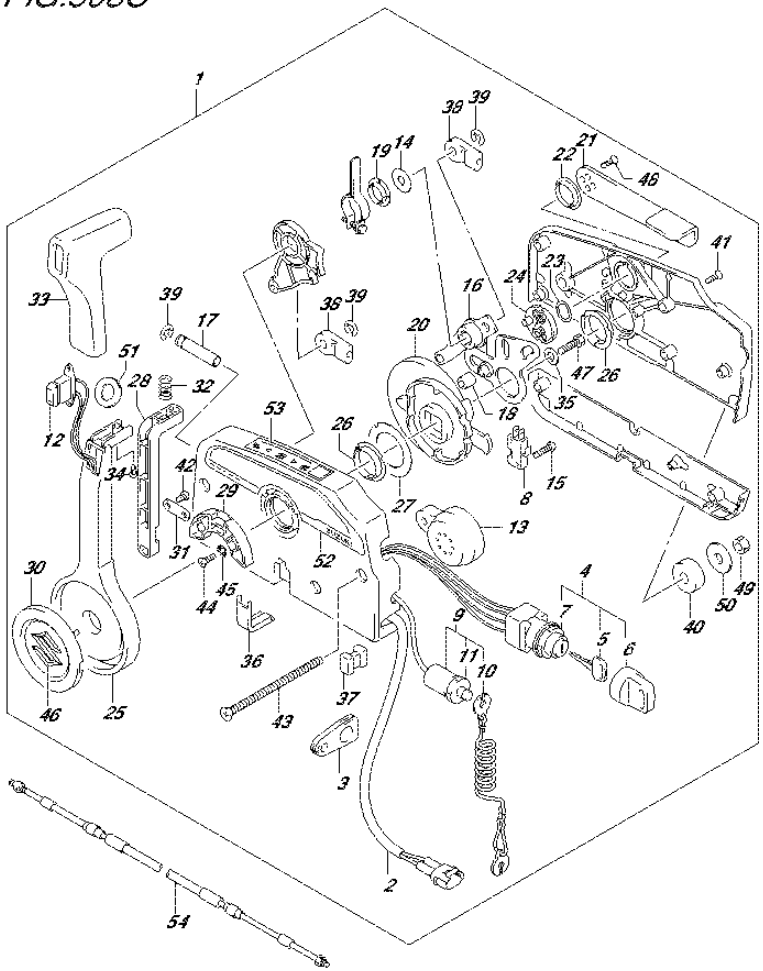

FIG.508C (4-J-3) OPT:REMOTE CONTROL (DF50A E01)

REF NO.	PART NO.	DESCRIPTION	Q'TY	REMARKS
54-1	67320-93J00	CABLE, REMOCON 8F (2.4M)	1	
54-2	67320-93J10	CABLE, REMOCON 10F (3.1M)	1	
54-3	67320-93J20	CABLE, REMOCON 12F (3.7M)	1	
54-4	67320-93J30	CABLE, REMOCON 14F (4.2M)	1	
54-5	67320-93J40	CABLE, REMOCON 16F (4.8M)	1	
54-6	67320-93J50	CABLE, REMOCON 18F (5.4M)	1	
54-7	67320-93J60	CABLE, REMOCON 20F (6.1M)	1	
54-8	67320-93J70	CABLE, REMOCON 22F (6.7M)	1	
54-9	67320-93J80	CABLE, REMOCON 24F (7.3M)	1	

FIG.508D

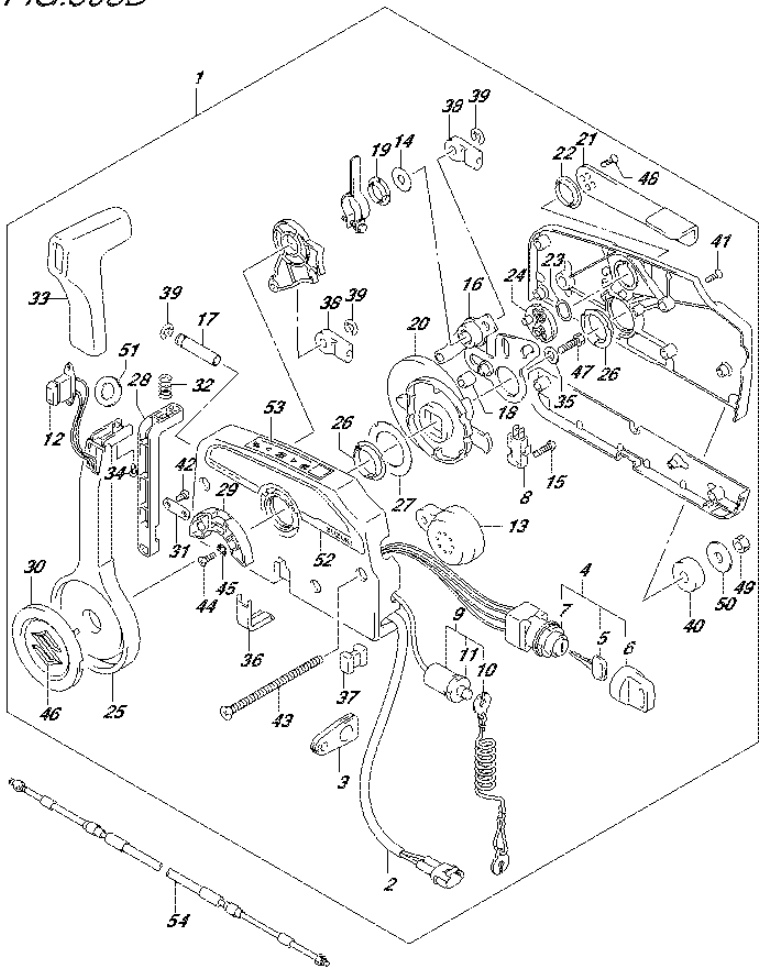

FIG.508D (4-J-4) OPT:REMOTE CONTROL (DF60A E01)

REF NO.	PART NO.	DESCRIPTION	Q'TY	REMARKS
1	67200-93J50	REMOTE CONTROL ASSY	1	
2	36646-93J01	.WIRE ASSY, PTT SW ADAPTER	1	
3	36628-92E00	.GROMMET, WIRE HARNESS	1	
4	37110-93J11	.SWITCH ASSY, IGNITION	1	
5-1	37141-99E00	..KEY (931)	2	
5-2	37141-99E10	..KEY (932)	2	
5-3	37141-99E20	..KEY (933)	2	
5-4	37141-99E30	..KEY (934)	2	
5-5	37141-99E40	..KEY (935)	2	
5-6	37141-99E50	..KEY (936)	2	
5-7	37141-99E60	..KEY (937)	2	
5-8	37141-99E70	..KEY (938)	2	
5-9	37141-99E80	..KEY (939)	2	
5-10	37141-99E90	..KEY (940)	2	
5-11	37141-99EA0	..KEY (941)	2	
5-12	37141-99EB0	..KEY (942)	2	
6	37143-99E00	..CAP, KEY	2	
7	37149-93J00	..CAP CYLINDER BODY	1	
8	37721-93J91	.SWITCH, NEUTRAL	1	
9	37820-93J04	.SWITCH ASSY, EMERGENCY	1	
10	37823-92E01	..PLATE	1	
11	37826-92J00	..NUT	1	
12	37850-90J05	.SWITCH ASSY, PTT	1	
13	38500-93J90	.BUZZER	1	
14	67212-95600	.WASHER	1	
15	67296-92E11	.SCREW, NEUTRAL SW	2	
16	67220-95630	.PLATE ASSY	1	
17	67223-99E10	.KNOB, BRAKE ADJ	1	
18	67229-95600	.ROLLER	1	
19	67232-95600	.BUSH	1	
20	67238-87D00	.GEAR, DRIVE	1	
21	67241-99E10	.LEVER, FREE THROTTLE	1	
22	67243-95600	.BUSH	1	
23	67244-95600	.WASHER, WAVE	1	

FIG.508D

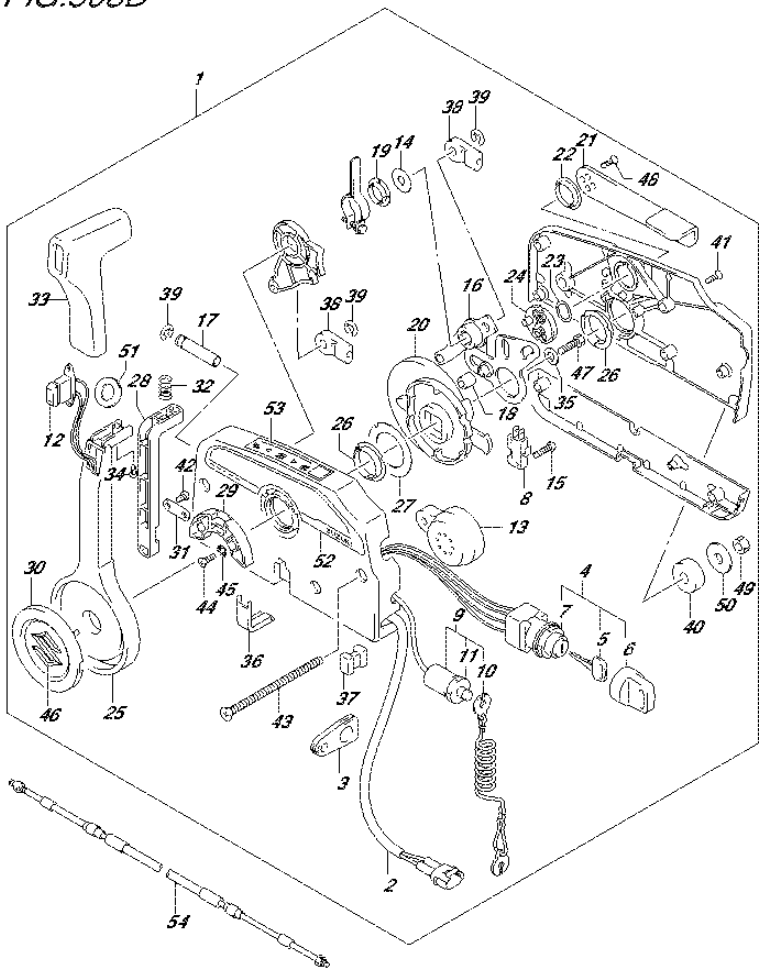

FIG.508D (4-J-5) OPT:REMOTE CONTROL (DF60A E01)

REF NO.	PART NO.	DESCRIPTION	Q'TY	REMARKS
24	67245-95600	.DRUM, FREE THROTTLE	1	
25	67251-99E20	.LEVER, HANDLE	1	
26	67252-95600	.BUSH	2	
27	67253-95600	.WASHER	1	
28	67255-99E10	.ARM, LOCK	1	
29	67256-95600	.HOLDER, NEUT LOCK	1	
30	67257-99E10	.CAP, LEVER	1	
31	67258-99E00	.BRACKET, LOCK ARM	1	
32	67259-87D00	.SPRING, NEUTRAL ARM	1	
33	67261-99E10	.GRIP	1	
34	67296-94310	.SCREW	1	
35	67264-95600	.WASHER	1	
36	67267-93J00	.COVER, WIRE	1	
37	67273-95600	.SPACER	1	
38	67275-95600	.END, CABLE	2	
39	67292-94300	.E RING	3	
40	67294-95600	.SPACER	3	
41	67296-90J00	.SCREW	5	
42	67296-94300	.SCREW	2	
43	67296-95600	.SCREW	3	
44	67296-95610	.SCREW	2	
45	67297-95600	.WASHER	2	
46	77811-54GB0-0PG	.EMBLEM, REAR MARK S (CHROME)	1	
47	09100-08232	.BOLT (8X30)	1	
48	09126-05003	.SCREW (5X12)	2	
49	09140-06020	.NUT	3	
50	09160-06104	.WASHER (6.5X24X2)	3	
51	37859-90J00	.SPACER	1	
52	67282-94L00	.DECAL, REMOCON SIDE	1	
53	67284-94L00	.MARK, HANDLE LEVER	1	

FIG.508D

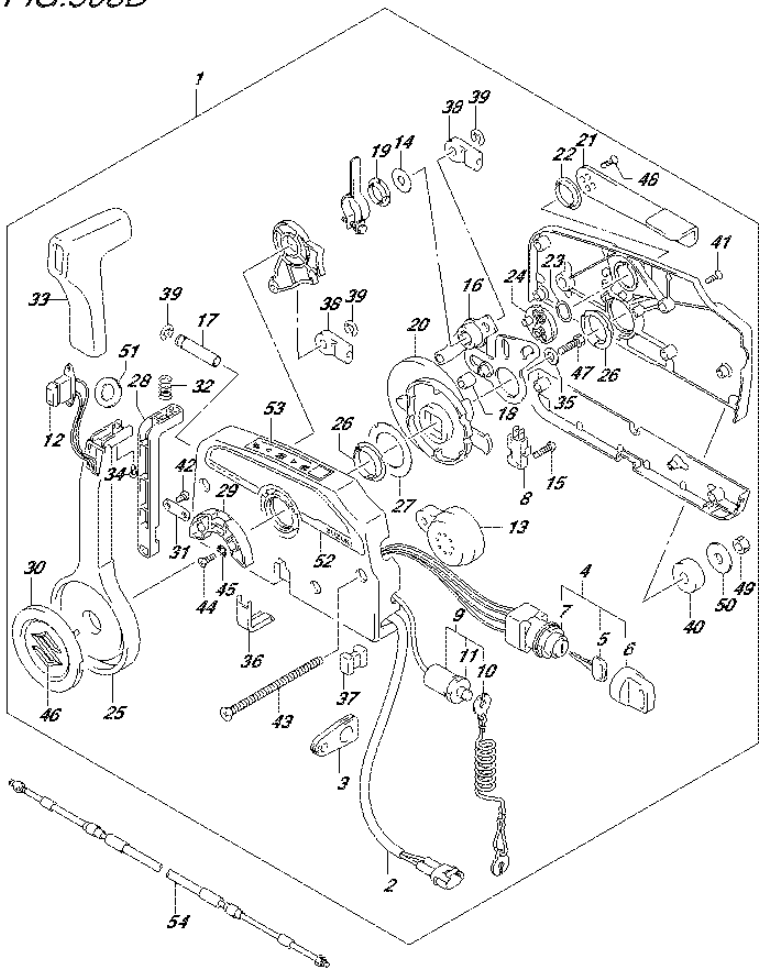

FIG.508D (4-J-6) OPT:REMOTE CONTROL (DF60A E01)

REF NO.	PART NO.	DESCRIPTION	Q'TY	REMARKS
54-1	67320-93J00	CABLE, REMOCON 8F (2.4M)	1	
54-2	67320-93J10	CABLE, REMOCON 10F (3.1M)	1	
54-3	67320-93J20	CABLE, REMOCON 12F (3.7M)	1	
54-4	67320-93J30	CABLE, REMOCON 14F (4.2M)	1	
54-5	67320-93J40	CABLE, REMOCON 16F (4.8M)	1	
54-6	67320-93J50	CABLE, REMOCON 18F (5.4M)	1	
54-7	67320-93J60	CABLE, REMOCON 20F (6.1M)	1	
54-8	67320-93J70	CABLE, REMOCON 22F (6.7M)	1	
54-9	67320-93J80	CABLE, REMOCON 24F (7.3M)	1	

FIG.508E

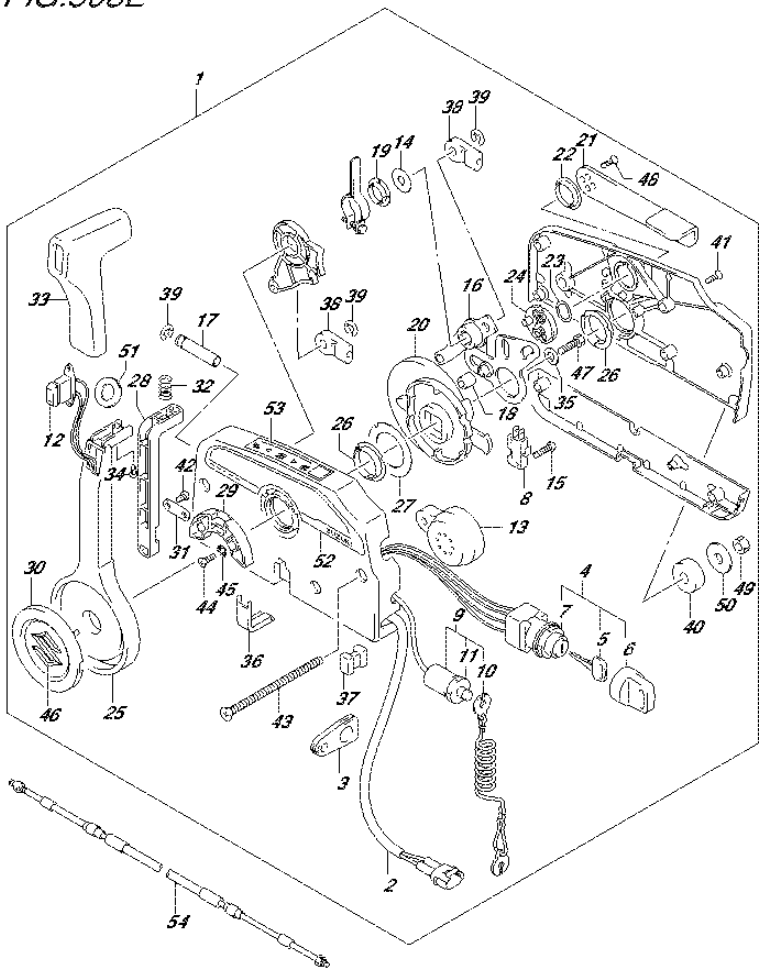

FIG.508E (4-J-7) OPT:REMOTE CONTROL (DF60A E40)

REF NO.	PART NO.	DESCRIPTION	Q'TY	REMARKS
1	67200-93J50	REMOTE CONTROL ASSY	1	
2	36646-93J01	.WIRE ASSY, PTT SW ADAPTER	1	
3	36628-92E00	.GROMMET, WIRE HARNESS	1	
4	37110-93J11	.SWITCH ASSY, IGNITION	1	
5-1	37141-99E00	..KEY (931)	2	
5-2	37141-99E10	..KEY (932)	2	
5-3	37141-99E20	..KEY (933)	2	
5-4	37141-99E30	..KEY (934)	2	
5-5	37141-99E40	..KEY (935)	2	
5-6	37141-99E50	..KEY (936)	2	
5-7	37141-99E60	..KEY (937)	2	
5-8	37141-99E70	..KEY (938)	2	
5-9	37141-99E80	..KEY (939)	2	
5-10	37141-99E90	..KEY (940)	2	
5-11	37141-99EA0	..KEY (941)	2	
5-12	37141-99EB0	..KEY (942)	2	
6	37143-99E00	..CAP, KEY	2	
7	37149-93J00	..CAP CYLINDER BODY	1	
8	37721-93J91	.SWITCH, NEUTRAL	1	
9	37820-93J04	.SWITCH ASSY, EMERGENCY	1	
10	37823-92E01	..PLATE	1	
11	37826-92J00	..NUT	1	
12	37850-90J05	.SWITCH ASSY, PTT	1	
13	38500-93J90	.BUZZER	1	
14	67212-95600	.WASHER	1	
15	67296-92E11	.SCREW, NEUTRAL SW	2	
16	67220-95630	.PLATE ASSY	1	
17	67223-99E10	.KNOB, BRAKE ADJ	1	
18	67229-95600	.ROLLER	1	
19	67232-95600	.BUSH	1	
20	67238-87D00	.GEAR, DRIVE	1	
21	67241-99E10	.LEVER, FREE THROTTLE	1	
22	67243-95600	.BUSH	1	
23	67244-95600	.WASHER, WAVE	1	

FIG.508E

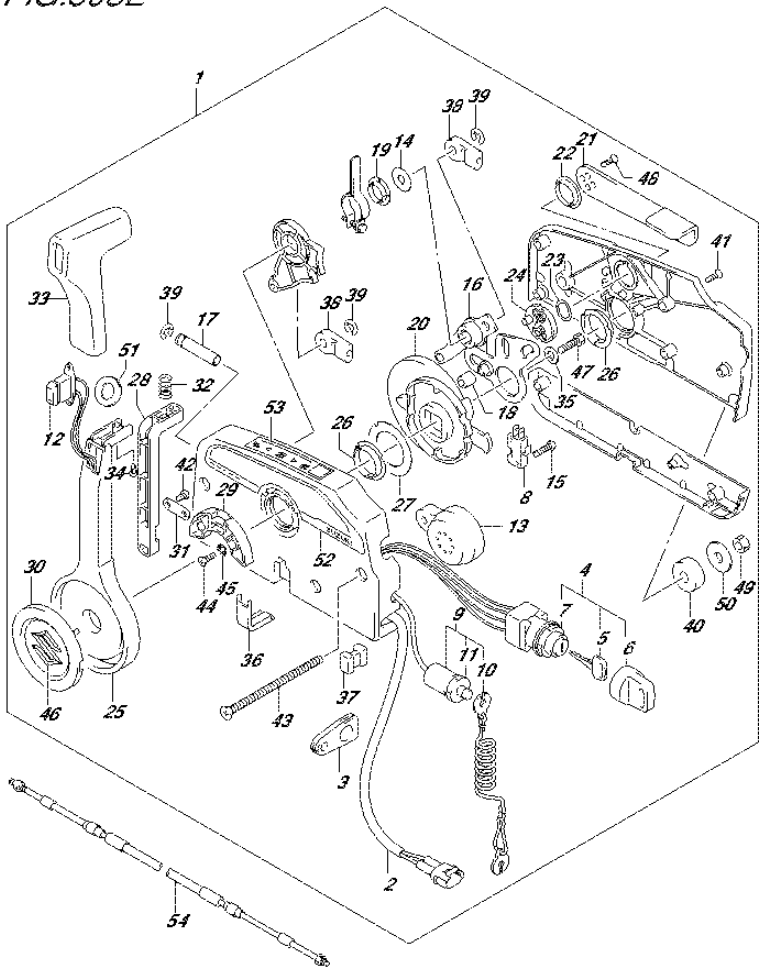

FIG.508E (4-J-8) OPT:REMOTE CONTROL (DF60A E40)

REF NO.	PART NO.	DESCRIPTION	Q'TY	REMARKS
24	67245-95600	.DRUM, FREE THROTTLE	1	
25	67251-99E20	.LEVER, HANDLE	1	
26	67252-95600	.BUSH	2	
27	67253-95600	.WASHER	1	
28	67255-99E10	.ARM, LOCK	1	
29	67256-95600	.HOLDER, NEUT LOCK	1	
30	67257-99E10	.CAP, LEVER	1	
31	67258-99E00	.BRACKET, LOCK ARM	1	
32	67259-87D00	.SPRING, NEUTRAL ARM	1	
33	67261-99E10	.GRIP	1	
34	67296-94310	.SCREW	1	
35	67264-95600	.WASHER	1	
36	67267-93J00	.COVER, WIRE	1	
37	67273-95600	.SPACER	1	
38	67275-95600	.END, CABLE	2	
39	67292-94300	.E RING	3	
40	67294-95600	.SPACER	3	
41	67296-90J00	.SCREW	5	
42	67296-94300	.SCREW	2	
43	67296-95600	.SCREW	3	
44	67296-95610	.SCREW	2	
45	67297-95600	.WASHER	2	
46	77811-54GB0-0PG	.EMBLEM, REAR MARK S (CHROME)	1	
47	09100-08232	.BOLT (8X30)	1	
48	09126-05003	.SCREW (5X12)	2	
49	09140-06020	.NUT	3	
50	09160-06104	.WASHER (6.5X24X2)	3	
51	37859-90J00	.SPACER	1	
52	67282-94L00	.DECAL, REMOCON SIDE	1	
53	67284-94L00	.MARK, HANDLE LEVER	1	

FIG.508E

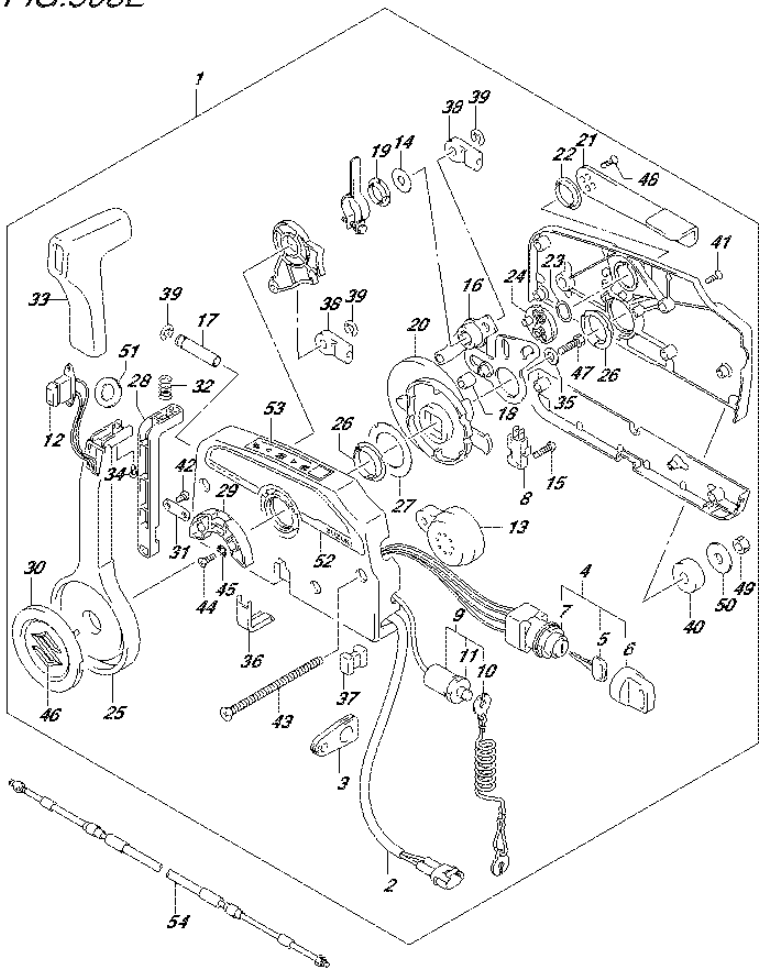

FIG.508E (4-J-9) OPT:REMOTE CONTROL (DF60A E40)

REF NO.	PART NO.	DESCRIPTION	Q'TY	REMARKS
54-1	67320-93J00	CABLE, REMOCON 8F (2.4M)	1	
54-2	67320-93J10	CABLE, REMOCON 10F (3.1M)	1	
54-3	67320-93J20	CABLE, REMOCON 12F (3.7M)	1	
54-4	67320-93J30	CABLE, REMOCON 14F (4.2M)	1	
54-5	67320-93J40	CABLE, REMOCON 16F (4.8M)	1	
54-6	67320-93J50	CABLE, REMOCON 18F (5.4M)	1	
54-7	67320-93J60	CABLE, REMOCON 20F (6.1M)	1	
54-8	67320-93J70	CABLE, REMOCON 22F (6.7M)	1	
54-9	67320-93J80	CABLE, REMOCON 24F (7.3M)	1	

FIG.508F

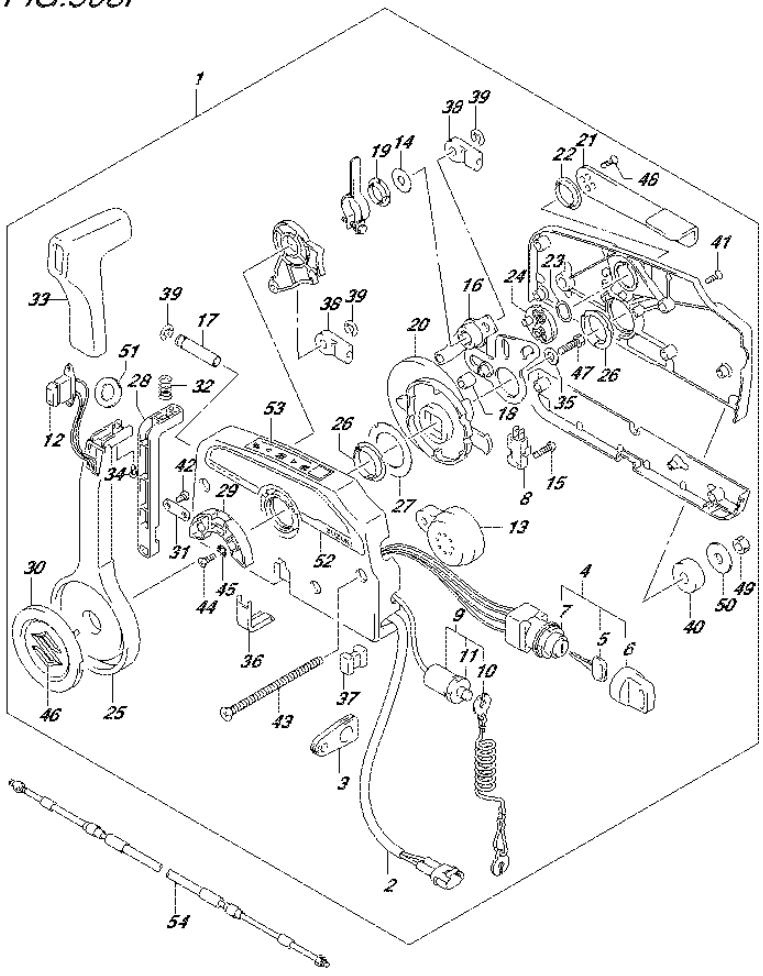

FIG.508F (4-J-10) OPT:REMOTE CONTROL (DF50AVT E01)

REF NO.	PART NO.	DESCRIPTION	Q'TY	REMARKS
1	67200-93J50	REMOTE CONTROL ASSY	1	
2	36646-93J01	.WIRE ASSY, PTT SW ADAPTER	1	
3	36628-92E00	.GROMMET, WIRE HARNESS	1	
4	37110-93J11	.SWITCH ASSY, IGNITION	1	
5-1	37141-99E00	..KEY (931)	2	
5-2	37141-99E10	..KEY (932)	2	
5-3	37141-99E20	..KEY (933)	2	
5-4	37141-99E30	..KEY (934)	2	
5-5	37141-99E40	..KEY (935)	2	
5-6	37141-99E50	..KEY (936)	2	
5-7	37141-99E60	..KEY (937)	2	
5-8	37141-99E70	..KEY (938)	2	
5-9	37141-99E80	..KEY (939)	2	
5-10	37141-99E90	..KEY (940)	2	
5-11	37141-99EA0	..KEY (941)	2	
5-12	37141-99EB0	..KEY (942)	2	
6	37143-99E00	..CAP, KEY	2	
7	37149-93J00	..CAP CYLINDER BODY	1	
8	37721-93J91	.SWITCH, NEUTRAL	1	
9	37820-93J04	.SWITCH ASSY, EMERGENCY	1	
10	37823-92E01	..PLATE	1	
11	37826-92J00	..NUT	1	
12	37850-90J05	.SWITCH ASSY, PTT	1	
13	38500-93J90	.BUZZER	1	
14	67212-95600	.WASHER	1	
15	67296-92E11	.SCREW, NEUTRAL SW	2	
16	67220-95630	.PLATE ASSY	1	
17	67223-99E10	.KNOB, BRAKE ADJ	1	
18	67229-95600	.ROLLER	1	
19	67232-95600	.BUSH	1	
20	67238-87D00	.GEAR, DRIVE	1	
21	67241-99E10	.LEVER, FREE THROTTLE	1	
22	67243-95600	.BUSH	1	
23	67244-95600	.WASHER, WAVE	1	

FIG.508F

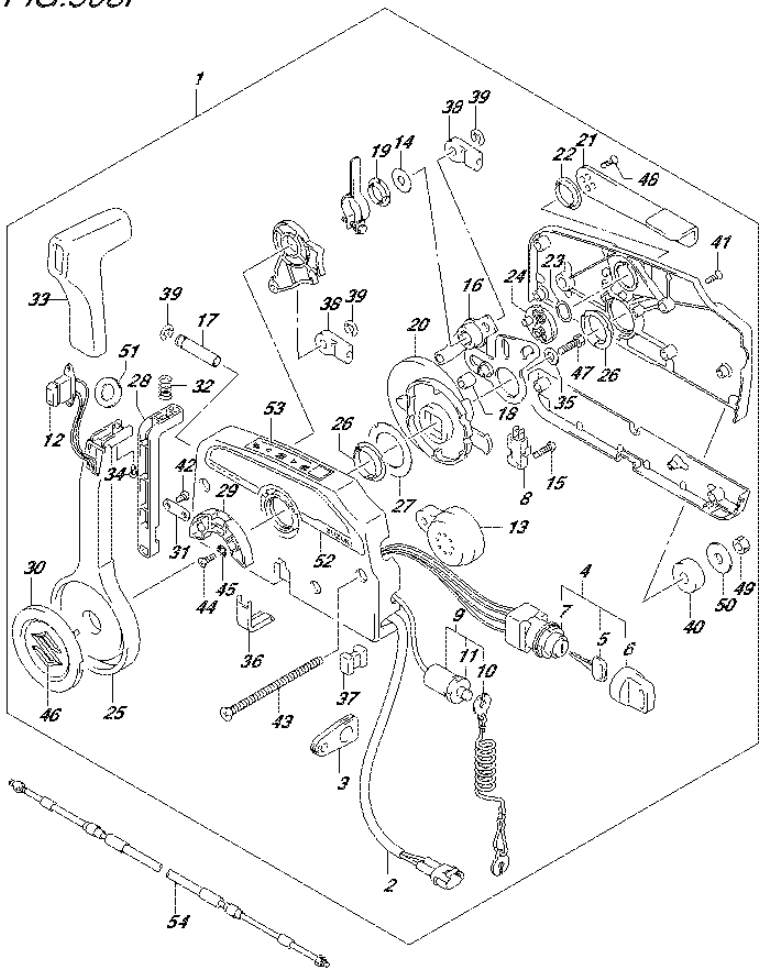

FIG.508F (4-J-11) OPT:REMOTE CONTROL (DF50AVT E01)

REF NO.	PART NO.	DESCRIPTION	Q'TY	REMARKS
24	67245-95600	.DRUM, FREE THROTTLE	1	
25	67251-99E20	.LEVER, HANDLE	1	
26	67252-95600	.BUSH	2	
27	67253-95600	.WASHER	1	
28	67255-99E10	.ARM, LOCK	1	
29	67256-95600	.HOLDER, NEUT LOCK	1	
30	67257-99E10	.CAP, LEVER	1	
31	67258-99E00	.BRACKET, LOCK ARM	1	
32	67259-87D00	.SPRING, NEUTRAL ARM	1	
33	67261-99E10	.GRIP	1	
34	67296-94310	.SCREW	1	
35	67264-95600	.WASHER	1	
36	67267-93J00	.COVER, WIRE	1	
37	67273-95600	.SPACER	1	
38	67275-95600	.END, CABLE	2	
39	67292-94300	.E RING	3	
40	67294-95600	.SPACER	3	
41	67296-90J00	.SCREW	5	
42	67296-94300	.SCREW	2	
43	67296-95600	.SCREW	3	
44	67296-95610	.SCREW	2	
45	67297-95600	.WASHER	2	
46	77811-54GB0-0PG	.EMBLEM, REAR MARK S (CHROME)	1	
47	09100-08232	.BOLT (8X30)	1	
48	09126-05003	.SCREW (5X12)	2	
49	09140-06020	.NUT	3	
50	09160-06104	.WASHER (6.5X24X2)	3	
51	37859-90J00	.SPACER	1	
52	67282-94L00	.DECAL, REMOCON SIDE	1	
53	67284-94L00	.MARK, HANDLE LEVER	1	

FIG.508F

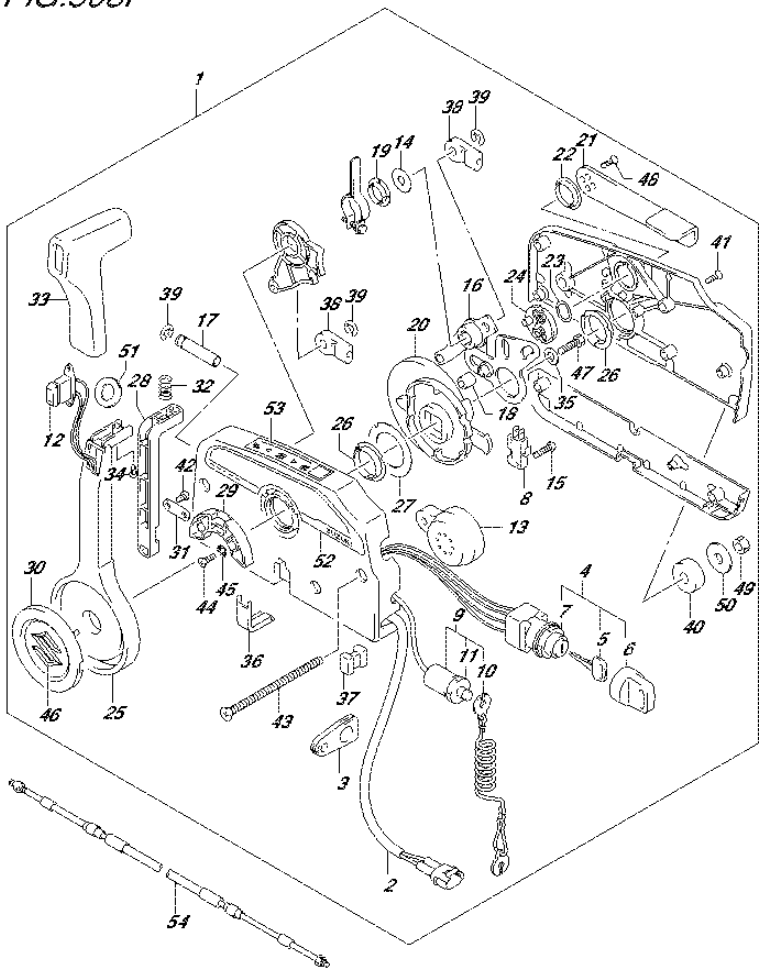

FIG.508F (4-J-12) OPT:REMOTE CONTROL (DF50AVT E01)

REF NO.	PART NO.	DESCRIPTION	Q'TY	REMARKS
54-1	67320-93J00	CABLE, REMOCON 8F (2.4M)	1	
54-2	67320-93J10	CABLE, REMOCON 10F (3.1M)	1	
54-3	67320-93J20	CABLE, REMOCON 12F (3.7M)	1	
54-4	67320-93J30	CABLE, REMOCON 14F (4.2M)	1	
54-5	67320-93J40	CABLE, REMOCON 16F (4.8M)	1	
54-6	67320-93J50	CABLE, REMOCON 18F (5.4M)	1	
54-7	67320-93J60	CABLE, REMOCON 20F (6.1M)	1	
54-8	67320-93J70	CABLE, REMOCON 22F (6.7M)	1	
54-9	67320-93J80	CABLE, REMOCON 24F (7.3M)	1	

FIG.508G

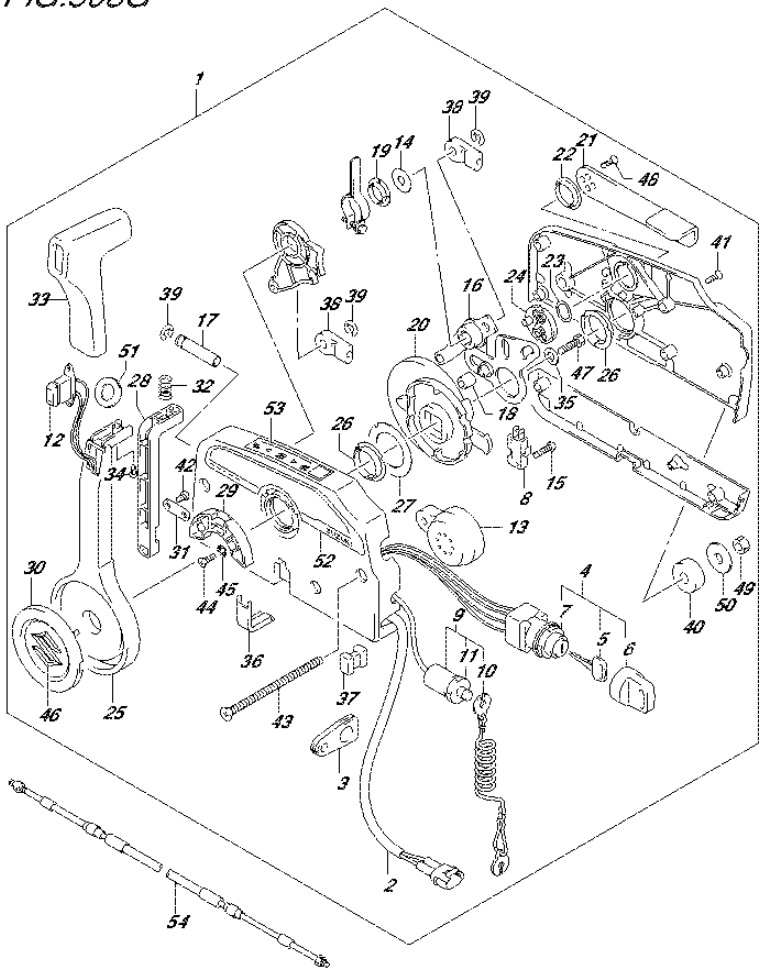

FIG.508G (4-J-13) OPT:REMOTE CONTROL (DF60AVT E01)

REF NO.	PART NO.	DESCRIPTION	Q'TY	REMARKS
1	67200-93J50	REMOTE CONTROL ASSY	1	
2	36646-93J01	.WIRE ASSY, PTT SW ADAPTER	1	
3	36628-92E00	.GROMMET, WIRE HARNESS	1	
4	37110-93J11	.SWITCH ASSY, IGNITION	1	
5-1	37141-99E00	..KEY (931)	2	
5-2	37141-99E10	..KEY (932)	2	
5-3	37141-99E20	..KEY (933)	2	
5-4	37141-99E30	..KEY (934)	2	
5-5	37141-99E40	..KEY (935)	2	
5-6	37141-99E50	..KEY (936)	2	
5-7	37141-99E60	..KEY (937)	2	
5-8	37141-99E70	..KEY (938)	2	
5-9	37141-99E80	..KEY (939)	2	
5-10	37141-99E90	..KEY (940)	2	
5-11	37141-99EA0	..KEY (941)	2	
5-12	37141-99EB0	..KEY (942)	2	
6	37143-99E00	..CAP, KEY	2	
7	37149-93J00	..CAP CYLINDER BODY	1	
8	37721-93J91	.SWITCH, NEUTRAL	1	
9	37820-93J04	.SWITCH ASSY, EMERGENCY	1	
10	37823-92E01	..PLATE	1	
11	37826-92J00	..NUT	1	
12	37850-90J05	.SWITCH ASSY, PTT	1	
13	38500-93J90	.BUZZER	1	
14	67212-95600	.WASHER	1	
15	67296-92E11	.SCREW, NEUTRAL SW	2	
16	67220-95630	.PLATE ASSY	1	
17	67223-99E10	.KNOB, BRAKE ADJ	1	
18	67229-95600	.ROLLER	1	
19	67232-95600	.BUSH	1	
20	67238-87D00	.GEAR, DRIVE	1	
21	67241-99E10	.LEVER, FREE THROTTLE	1	
22	67243-95600	.BUSH	1	
23	67244-95600	.WASHER, WAVE	1	

FIG.508G

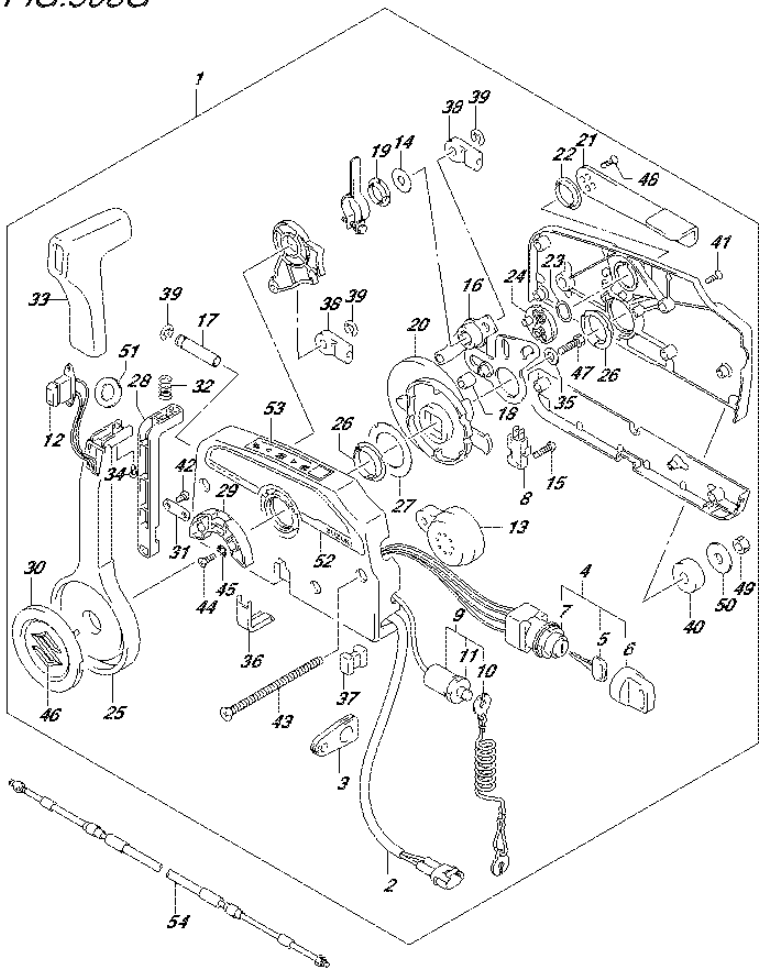

FIG.508G (4-J-14) OPT:REMOTE CONTROL (DF60AVT E01)

REF NO.	PART NO.	DESCRIPTION	Q'TY	REMARKS
24	67245-95600	.DRUM, FREE THROTTLE	1	
25	67251-99E20	.LEVER, HANDLE	1	
26	67252-95600	.BUSH	2	
27	67253-95600	.WASHER	1	
28	67255-99E10	.ARM, LOCK	1	
29	67256-95600	.HOLDER, NEUT LOCK	1	
30	67257-99E10	.CAP, LEVER	1	
31	67258-99E00	.BRACKET, LOCK ARM	1	
32	67259-87D00	.SPRING, NEUTRAL ARM	1	
33	67261-99E10	.GRIP	1	
34	67296-94310	.SCREW	1	
35	67264-95600	.WASHER	1	
36	67267-93J00	.COVER, WIRE	1	
37	67273-95600	.SPACER	1	
38	67275-95600	.END, CABLE	2	
39	67292-94300	.E RING	3	
40	67294-95600	.SPACER	3	
41	67296-90J00	.SCREW	5	
42	67296-94300	.SCREW	2	
43	67296-95600	.SCREW	3	
44	67296-95610	.SCREW	2	
45	67297-95600	.WASHER	2	
46	77811-54GB0-0PG	.EMBLEM, REAR MARK S (CHROME)	1	
47	09100-08232	.BOLT (8X30)	1	
48	09126-05003	.SCREW (5X12)	2	
49	09140-06020	.NUT	3	
50	09160-06104	.WASHER (6.5X24X2)	3	
51	37859-90J00	.SPACER	1	
52	67282-94L00	.DECAL, REMOCON SIDE	1	
53	67284-94L00	.MARK, HANDLE LEVER	1	

FIG.508G

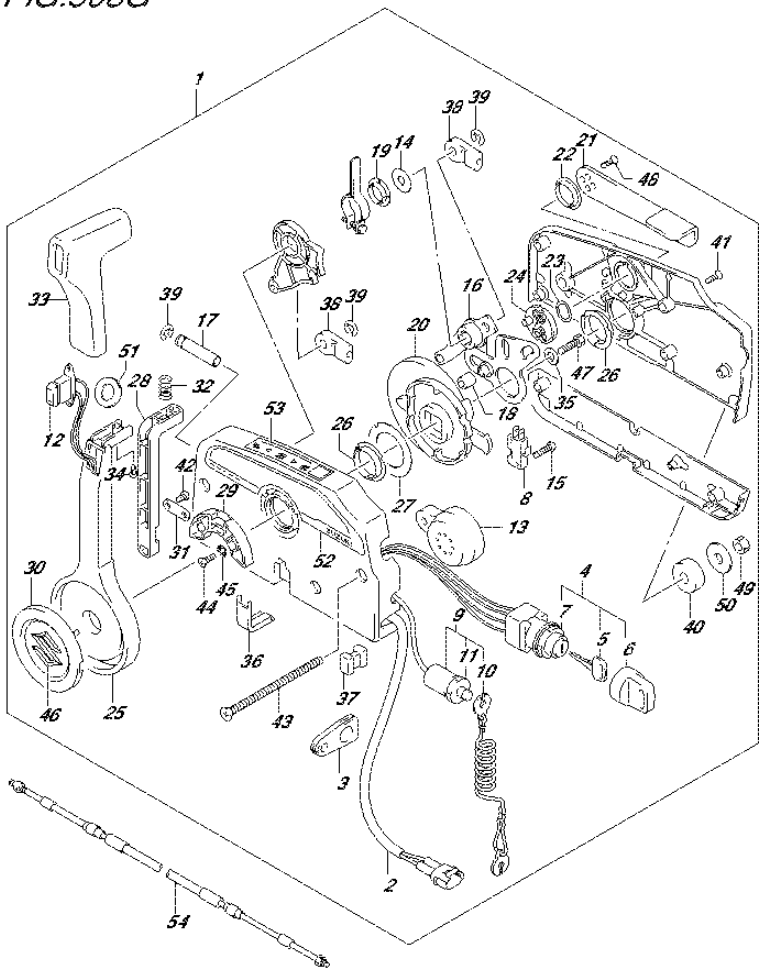

FIG.508G (4-J-15) OPT:REMOTE CONTROL (DF60AVT E01)

REF NO.	PART NO.	DESCRIPTION	Q'TY	REMARKS
54-1	67320-93J00	CABLE, REMOCON 8F (2.4M)	1	
54-2	67320-93J10	CABLE, REMOCON 10F (3.1M)	1	
54-3	67320-93J20	CABLE, REMOCON 12F (3.7M)	1	
54-4	67320-93J30	CABLE, REMOCON 14F (4.2M)	1	
54-5	67320-93J40	CABLE, REMOCON 16F (4.8M)	1	
54-6	67320-93J50	CABLE, REMOCON 18F (5.4M)	1	
54-7	67320-93J60	CABLE, REMOCON 20F (6.1M)	1	
54-8	67320-93J70	CABLE, REMOCON 22F (6.7M)	1	
54-9	67320-93J80	CABLE, REMOCON 24F (7.3M)	1	

FIG.508H

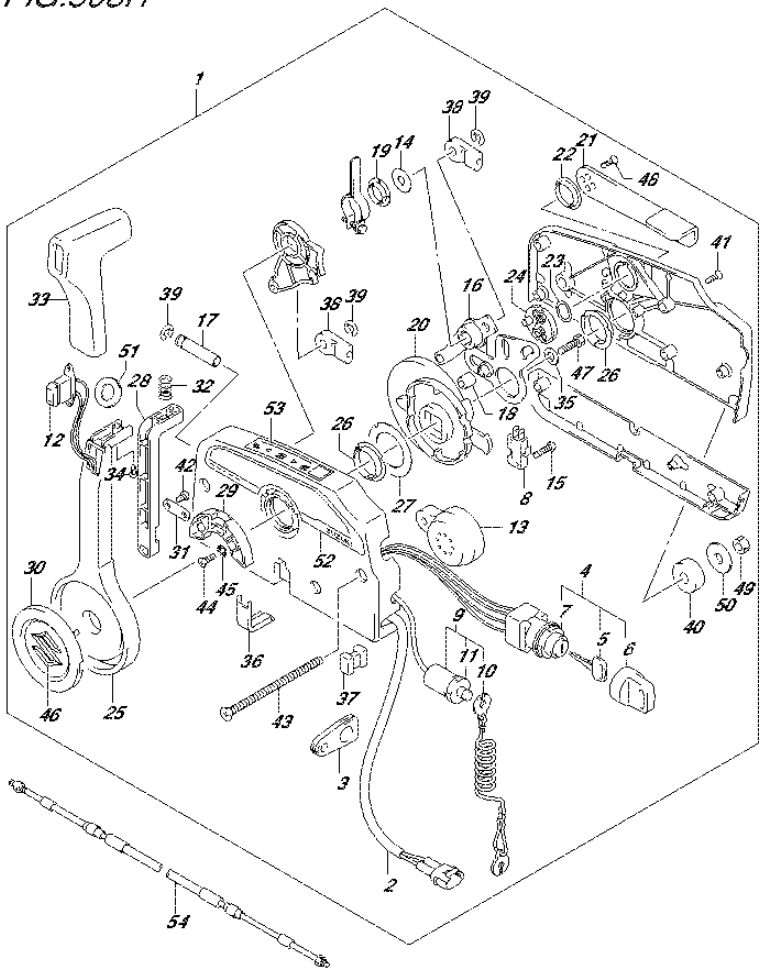

FIG.508H (4-K-2) OPT:REMOTE CONTROL (DF60AVT E40)

REF NO.	PART NO.	DESCRIPTION	Q'TY	REMARKS
1	67200-93J50	REMOTE CONTROL ASSY	1	
2	36646-93J01	.WIRE ASSY, PTT SW ADAPTER	1	
3	36628-92E00	.GROMMET, WIRE HARNESS	1	
4	37110-93J11	.SWITCH ASSY, IGNITION	1	
5-1	37141-99E00	..KEY (931)	2	
5-2	37141-99E10	..KEY (932)	2	
5-3	37141-99E20	..KEY (933)	2	
5-4	37141-99E30	..KEY (934)	2	
5-5	37141-99E40	..KEY (935)	2	
5-6	37141-99E50	..KEY (936)	2	
5-7	37141-99E60	..KEY (937)	2	
5-8	37141-99E70	..KEY (938)	2	
5-9	37141-99E80	..KEY (939)	2	
5-10	37141-99E90	..KEY (940)	2	
5-11	37141-99EA0	..KEY (941)	2	
5-12	37141-99EB0	..KEY (942)	2	
6	37143-99E00	..CAP, KEY	2	
7	37149-93J00	..CAP CYLINDER BODY	1	
8	37721-93J91	.SWITCH, NEUTRAL	1	
9	37820-93J04	.SWITCH ASSY, EMERGENCY	1	
10	37823-92E01	..PLATE	1	
11	37826-92J00	..NUT	1	
12	37850-90J05	.SWITCH ASSY, PTT	1	
13	38500-93J90	.BUZZER	1	
14	67212-95600	.WASHER	1	
15	67296-92E11	.SCREW, NEUTRAL SW	2	
16	67220-95630	.PLATE ASSY	1	
17	67223-99E10	.KNOB, BRAKE ADJ	1	
18	67229-95600	.ROLLER	1	
19	67232-95600	.BUSH	1	
20	67238-87D00	.GEAR, DRIVE	1	
21	67241-99E10	.LEVER, FREE THROTTLE	1	
22	67243-95600	.BUSH	1	
23	67244-95600	.WASHER, WAVE	1	

FIG.508H

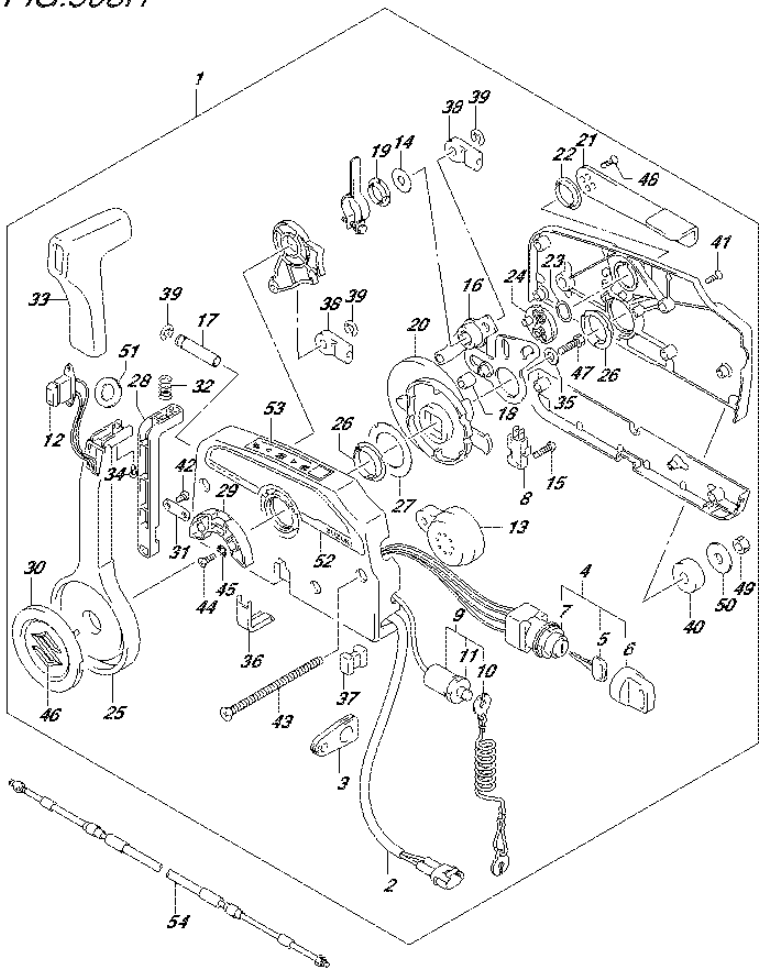

FIG.508H (4-K-3) OPT:REMOTE CONTROL (DF60AVT E40)

REF NO.	PART NO.	DESCRIPTION	Q'TY	REMARKS
24	67245-95600	.DRUM, FREE THROTTLE	1	
25	67251-99E20	.LEVER, HANDLE	1	
26	67252-95600	.BUSH	2	
27	67253-95600	.WASHER	1	
28	67255-99E10	.ARM, LOCK	1	
29	67256-95600	.HOLDER, NEUT LOCK	1	
30	67257-99E10	.CAP, LEVER	1	
31	67258-99E00	.BRACKET, LOCK ARM	1	
32	67259-87D00	.SPRING, NEUTRAL ARM	1	
33	67261-99E10	.GRIP	1	
34	67296-94310	.SCREW	1	
35	67264-95600	.WASHER	1	
36	67267-93J00	.COVER, WIRE	1	
37	67273-95600	.SPACER	1	
38	67275-95600	.END, CABLE	2	
39	67292-94300	.E RING	3	
40	67294-95600	.SPACER	3	
41	67296-90J00	.SCREW	5	
42	67296-94300	.SCREW	2	
43	67296-95600	.SCREW	3	
44	67296-95610	.SCREW	2	
45	67297-95600	.WASHER	2	
46	77811-54GB0-0PG	.EMBLEM, REAR MARK S (CHROME)	1	
47	09100-08232	.BOLT (8X30)	1	
48	09126-05003	.SCREW (5X12)	2	
49	09140-06020	.NUT	3	
50	09160-06104	.WASHER (6.5X24X2)	3	
51	37859-90J00	.SPACER	1	
52	67282-94L00	.DECAL, REMOCON SIDE	1	
53	67284-94L00	.MARK, HANDLE LEVER	1	

FIG.508H

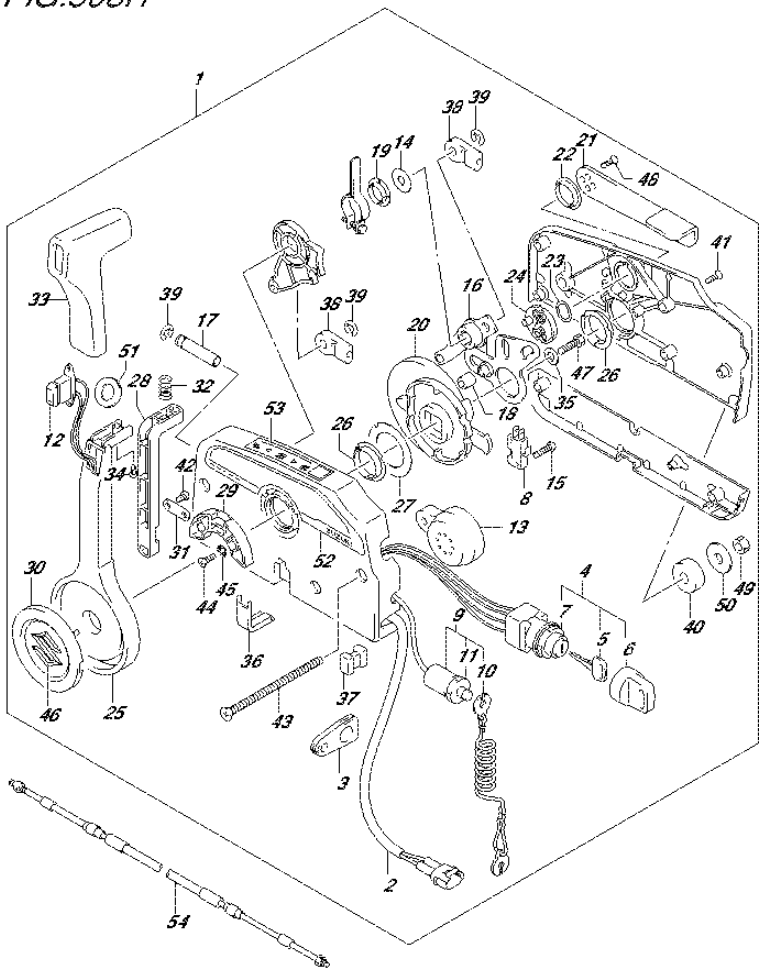

FIG.508H (4-K-4) OPT:REMOTE CONTROL (DF60AVT E40)

REF NO.	PART NO.	DESCRIPTION	Q'TY	REMARKS
54-1	67320-93J00	CABLE, REMOCON 8F (2.4M)	1	
54-2	67320-93J10	CABLE, REMOCON 10F (3.1M)	1	
54-3	67320-93J20	CABLE, REMOCON 12F (3.7M)	1	
54-4	67320-93J30	CABLE, REMOCON 14F (4.2M)	1	
54-5	67320-93J40	CABLE, REMOCON 16F (4.8M)	1	
54-6	67320-93J50	CABLE, REMOCON 18F (5.4M)	1	
54-7	67320-93J60	CABLE, REMOCON 20F (6.1M)	1	
54-8	67320-93J70	CABLE, REMOCON 22F (6.7M)	1	
54-9	67320-93J80	CABLE, REMOCON 24F (7.3M)	1	

FIG.515A (4-K-5) OPT:REMOCON CABLE (DF40AQH E01)

REF NO.	PART NO.	DESCRIPTION	Q'TY	REMARKS
1-1	67320-93J00	CABLE, REMOCON 8F (2.4M)	2	
1-2	67320-93J10	CABLE, REMOCON 10F (3.1M)	2	
1-3	67320-93J20	CABLE, REMOCON 12F (3.7M)	2	
1-4	67320-93J30	CABLE, REMOCON 14F (4.2M)	2	
1-5	67320-93J40	CABLE, REMOCON 16F (4.8M)	2	
1-6	67320-93J50	CABLE, REMOCON 18F (5.4M)	2	
1-7	67320-93J60	CABLE, REMOCON 20F (6.0M)	2	
1-8	67320-93J70	CABLE, REMOCON 22F (6.7M)	2	
1-9	67320-93J80	CABLE, REMOCON 24F (7.3M)	2	

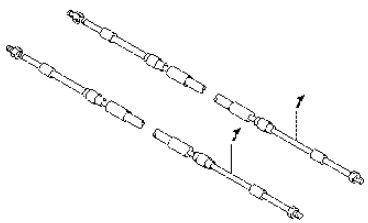

FIG.515B (4-K-6) OPT:REMOCON CABLE (DF40ATH E01)

REF NO.	PART NO.	DESCRIPTION	Q'TY	REMARKS
1-1	67320-93J00	CABLE, REMOCON 8F (2.4M)	2	
1-2	67320-93J10	CABLE, REMOCON 10F (3.1M)	2	
1-3	67320-93J20	CABLE, REMOCON 12F (3.7M)	2	
1-4	67320-93J30	CABLE, REMOCON 14F (4.2M)	2	
1-5	67320-93J40	CABLE, REMOCON 16F (4.8M)	2	
1-6	67320-93J50	CABLE, REMOCON 18F (5.4M)	2	
1-7	67320-93J60	CABLE, REMOCON 20F (6.0M)	2	
1-8	67320-93J70	CABLE, REMOCON 22F (6.7M)	2	
1-9	67320-93J80	CABLE, REMOCON 24F (7.3M)	2	

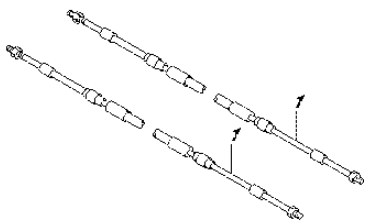

FIG.515C (4-K-7) OPT:REMOCON CABLE (DF50ATH E01)

REF NO.	PART NO.	DESCRIPTION	Q'TY	REMARKS
1-1	67320-93J00	CABLE, REMOCON 8F (2.4M)	2	
1-2	67320-93J10	CABLE, REMOCON 10F (3.1M)	2	
1-3	67320-93J20	CABLE, REMOCON 12F (3.7M)	2	
1-4	67320-93J30	CABLE, REMOCON 14F (4.2M)	2	
1-5	67320-93J40	CABLE, REMOCON 16F (4.8M)	2	
1-6	67320-93J50	CABLE, REMOCON 18F (5.4M)	2	
1-7	67320-93J60	CABLE, REMOCON 20F (6.0M)	2	
1-8	67320-93J70	CABLE, REMOCON 22F (6.7M)	2	
1-9	67320-93J80	CABLE, REMOCON 24F (7.3M)	2	

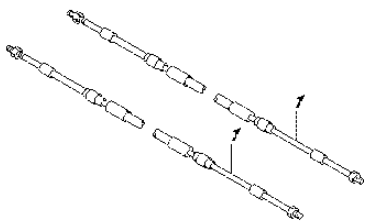

FIG.515D (4-K-8) OPT:REMOCON CABLE (DF60AQH E01)

REF NO.	PART NO.	DESCRIPTION	Q'TY	REMARKS
1-1	67320-93J00	CABLE, REMOCON 8F (2.4M)	2	
1-2	67320-93J10	CABLE, REMOCON 10F (3.1M)	2	
1-3	67320-93J20	CABLE, REMOCON 12F (3.7M)	2	
1-4	67320-93J30	CABLE, REMOCON 14F (4.2M)	2	
1-5	67320-93J40	CABLE, REMOCON 16F (4.8M)	2	
1-6	67320-93J50	CABLE, REMOCON 18F (5.4M)	2	
1-7	67320-93J60	CABLE, REMOCON 20F (6.0M)	2	
1-8	67320-93J70	CABLE, REMOCON 22F (6.7M)	2	
1-9	67320-93J80	CABLE, REMOCON 24F (7.3M)	2	

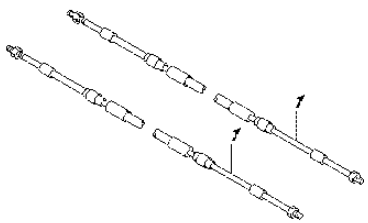

FIG.515E (4-K-9) OPT:REMOCON CABLE (DF60AQH E40)

REF NO.	PART NO.	DESCRIPTION	Q'TY	REMARKS
1-1	67320-93J00	CABLE, REMOCON 8F (2.4M)	2	
1-2	67320-93J10	CABLE, REMOCON 10F (3.1M)	2	
1-3	67320-93J20	CABLE, REMOCON 12F (3.7M)	2	
1-4	67320-93J30	CABLE, REMOCON 14F (4.2M)	2	
1-5	67320-93J40	CABLE, REMOCON 16F (4.8M)	2	
1-6	67320-93J50	CABLE, REMOCON 18F (5.4M)	2	
1-7	67320-93J60	CABLE, REMOCON 20F (6.0M)	2	
1-8	67320-93J70	CABLE, REMOCON 22F (6.7M)	2	
1-9	67320-93J80	CABLE, REMOCON 24F (7.3M)	2	

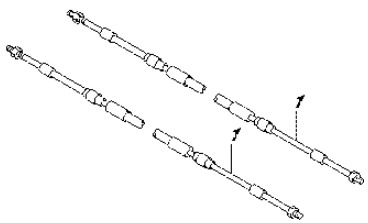

FIG.515F (4-K-10) OPT:REMOCON CABLE (DF60ATH E01)

REF NO.	PART NO.	DESCRIPTION	Q'TY	REMARKS
1-1	67320-93J00	CABLE, REMOCON 8F (2.4M)	2	
1-2	67320-93J10	CABLE, REMOCON 10F (3.1M)	2	
1-3	67320-93J20	CABLE, REMOCON 12F (3.7M)	2	
1-4	67320-93J30	CABLE, REMOCON 14F (4.2M)	2	
1-5	67320-93J40	CABLE, REMOCON 16F (4.8M)	2	
1-6	67320-93J50	CABLE, REMOCON 18F (5.4M)	2	
1-7	67320-93J60	CABLE, REMOCON 20F (6.0M)	2	
1-8	67320-93J70	CABLE, REMOCON 22F (6.7M)	2	
1-9	67320-93J80	CABLE, REMOCON 24F (7.3M)	2	

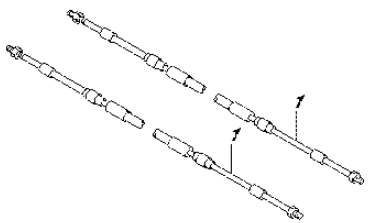

FIG.515G (4-K-11) OPT:REMOCON CABLE (DF60ATH E40)

REF NO.	PART NO.	DESCRIPTION	Q'TY	REMARKS
1-1	67320-93J00	CABLE, REMOCON 8F (2.4M)	2	
1-2	67320-93J10	CABLE, REMOCON 10F (3.1M)	2	
1-3	67320-93J20	CABLE, REMOCON 12F (3.7M)	2	
1-4	67320-93J30	CABLE, REMOCON 14F (4.2M)	2	
1-5	67320-93J40	CABLE, REMOCON 16F (4.8M)	2	
1-6	67320-93J50	CABLE, REMOCON 18F (5.4M)	2	
1-7	67320-93J60	CABLE, REMOCON 20F (6.0M)	2	
1-8	67320-93J70	CABLE, REMOCON 22F (6.7M)	2	
1-9	67320-93J80	CABLE, REMOCON 24F (7.3M)	2	

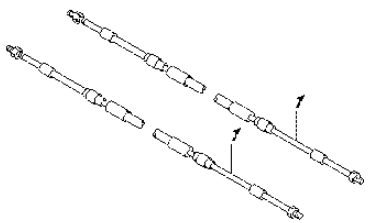

FIG.515H (4-K-12) OPT:REMOCON CABLE (DF50AVTH E01)

REF NO.	PART NO.	DESCRIPTION	Q'TY	REMARKS
1-1	67320-93J00	CABLE, REMOCON 8F (2.4M)	2	
1-2	67320-93J10	CABLE, REMOCON 10F (3.1M)	2	
1-3	67320-93J20	CABLE, REMOCON 12F (3.7M)	2	
1-4	67320-93J30	CABLE, REMOCON 14F (4.2M)	2	
1-5	67320-93J40	CABLE, REMOCON 16F (4.8M)	2	
1-6	67320-93J50	CABLE, REMOCON 18F (5.4M)	2	
1-7	67320-93J60	CABLE, REMOCON 20F (6.0M)	2	
1-8	67320-93J70	CABLE, REMOCON 22F (6.7M)	2	
1-9	67320-93J80	CABLE, REMOCON 24F (7.3M)	2	

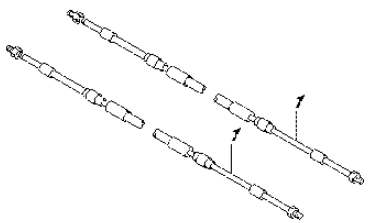

FIG.515J (4-K-13) OPT:REMOCON CABLE (DF60AVTH E01)

REF NO.	PART NO.	DESCRIPTION	Q'TY	REMARKS
1-1	67320-93J00	CABLE, REMOCON 8F (2.4M)	2	
1-2	67320-93J10	CABLE, REMOCON 10F (3.1M)	2	
1-3	67320-93J20	CABLE, REMOCON 12F (3.7M)	2	
1-4	67320-93J30	CABLE, REMOCON 14F (4.2M)	2	
1-5	67320-93J40	CABLE, REMOCON 16F (4.8M)	2	
1-6	67320-93J50	CABLE, REMOCON 18F (5.4M)	2	
1-7	67320-93J60	CABLE, REMOCON 20F (6.0M)	2	
1-8	67320-93J70	CABLE, REMOCON 22F (6.7M)	2	
1-9	67320-93J80	CABLE, REMOCON 24F (7.3M)	2	

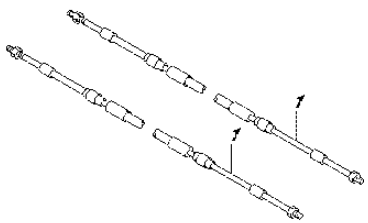

FIG.515K (4-K-14) OPT:REMOCON CABLE (DF60AVTH E40)

REF NO.	PART NO.	DESCRIPTION	Q'TY	REMARKS
1-1	67320-93J00	CABLE, REMOCON 8F (2.4M)	2	
1-2	67320-93J10	CABLE, REMOCON 10F (3.1M)	2	
1-3	67320-93J20	CABLE, REMOCON 12F (3.7M)	2	
1-4	67320-93J30	CABLE, REMOCON 14F (4.2M)	2	
1-5	67320-93J40	CABLE, REMOCON 16F (4.8M)	2	
1-6	67320-93J50	CABLE, REMOCON 18F (5.4M)	2	
1-7	67320-93J60	CABLE, REMOCON 20F (6.0M)	2	
1-8	67320-93J70	CABLE, REMOCON 22F (6.7M)	2	
1-9	67320-93J80	CABLE, REMOCON 24F (7.3M)	2	

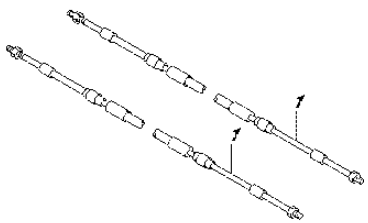

FIG.521A

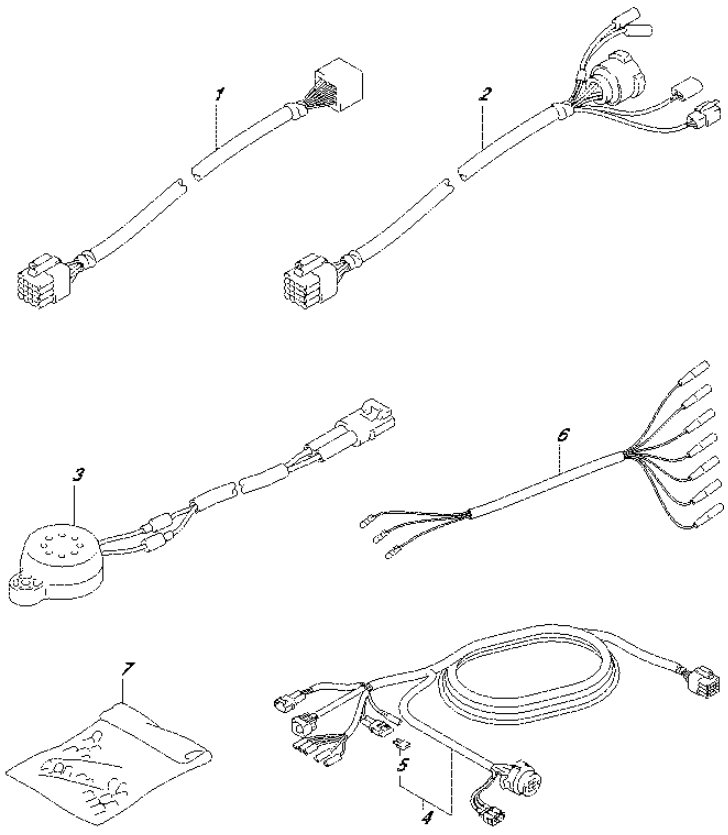

FIG.521A (4-K-15) OPT:HARNESS (DF40A E01)

REF NO.	PART NO.	DESCRIPTION	Q'TY	REMARKS
1-1	36620-93J10	WIRE ASSY, REMOCON EXTENSION	1	L:2000
1-2	36620-93J40	WIRE ASSY, REMOCON EXTENSION	1	L:3000
2	36620-93J30	WIRE ASSY, REMOCON ADAPTER	1	L:2000
3	38500-93J00	BUZZER ASSY, WARNING	1	
4-1	36620-93J02	WIRE ASSY, REMOTE CONTROL	1	L:5000
4-2	36620-93J52	WIRE ASSY, REMOTE CONTROL	1	L:3500
4-3	36620-93J62	WIRE ASSY, REMOTE CONTROL	1	L:6500
5	09481-10501	.FUSE (10A)	1	
6	36990-87D00	TERMINAL & SLEEVE SET	1	
7	36682-92E00	WIRE, MONITOR GAUGE EXTENSION	1	

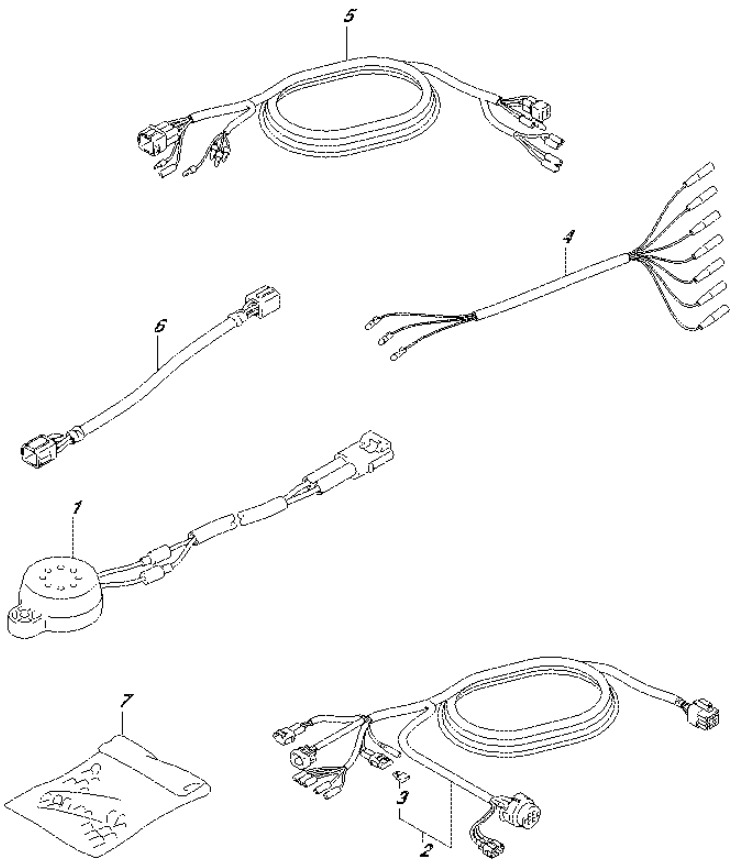

FIG.521B (4-L-2) OPT:HARNESS (DF40AQH E01)

REF NO.	PART NO.	DESCRIPTION	Q'TY	REMARKS
1	38500-93J00	BUZZER ASSY, WARNING	1	
2-1	36620-93J02	WIRE ASSY, REMOTE CONTROL	1	L:5000
2-2	36620-93J52	WIRE ASSY, REMOTE CONTROL	1	L:3500
2-3	36620-93J62	WIRE ASSY, REMOTE CONTROL	1	L:6500
3	09481-10501	.FUSE (10A)	1	
4	36990-87D00	TERMINAL & SLEEVE SET	1	
5	36630-92E00	WIRE ASSY, INSTRUMENT	1	
6	36660-94480	WIRE, MONITOR GAUGE EXTENSION	1	
7	36682-92E00	WIRE, MONITOR GAUGE EXTENSION	1	

FIG.521C

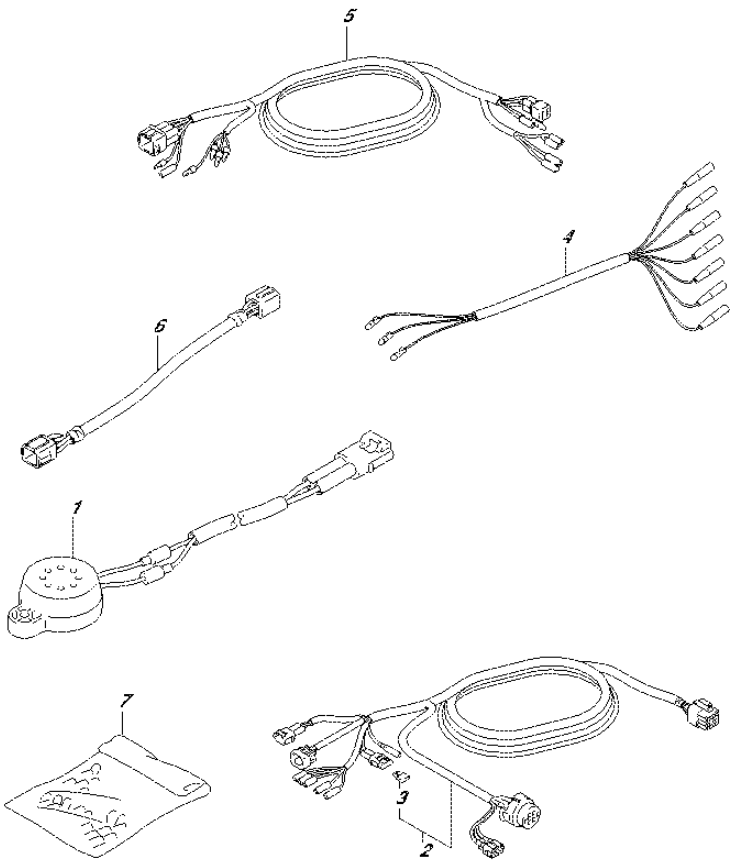

FIG.521C (4-L-3) OPT:HARNESS (DF40ATH E01)

REF NO.	PART NO.	DESCRIPTION	Q'TY	REMARKS
1	38500-93J00	BUZZER ASSY, WARNING	1	
2-1	36620-93J02	WIRE ASSY, REMOTE CONTROL	1	L:5000
2-2	36620-93J52	WIRE ASSY, REMOTE CONTROL	1	L:3500
2-3	36620-93J62	WIRE ASSY, REMOTE CONTROL	1	L:6500
3	09481-10501	.FUSE (10A)	1	
4	36990-87D00	TERMINAL & SLEEVE SET	1	
5	36630-92E00	WIRE ASSY, INSTRUMENT	1	
6	36660-94480	WIRE, MONITOR GAUGE EXTENSION	1	
7	36682-92E00	WIRE, MONITOR GAUGE EXTENSION	1	

FIG.521D

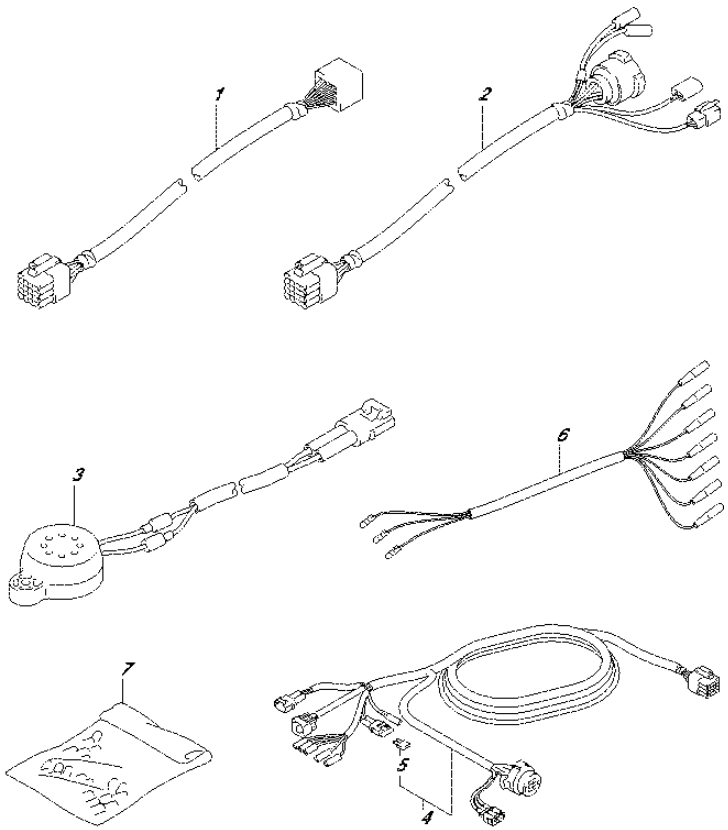

FIG.521D (4-L-4) OPT:HARNESS (DF40AST E34)

REF NO.	PART NO.	DESCRIPTION	Q'TY	REMARKS
1-1	36620-93J10	WIRE ASSY, REMOCON EXTENSION	1	L:2000
1-2	36620-93J40	WIRE ASSY, REMOCON EXTENSION	1	L:3000
2	36620-93J30	WIRE ASSY, REMOCON ADAPTER	1	L:2000
3	38500-93J00	BUZZER ASSY, WARNING	1	
4-1	36620-93J02	WIRE ASSY, REMOTE CONTROL	1	L:5000
4-2	36620-93J52	WIRE ASSY, REMOTE CONTROL	1	L:3500
4-3	36620-93J62	WIRE ASSY, REMOTE CONTROL	1	L:6500
5	09481-10501	.FUSE (10A)	1	
6	36990-87D00	TERMINAL & SLEEVE SET	1	
7	36682-92E00	WIRE, MONITOR GAUGE EXTENSION	1	

FIG.521E

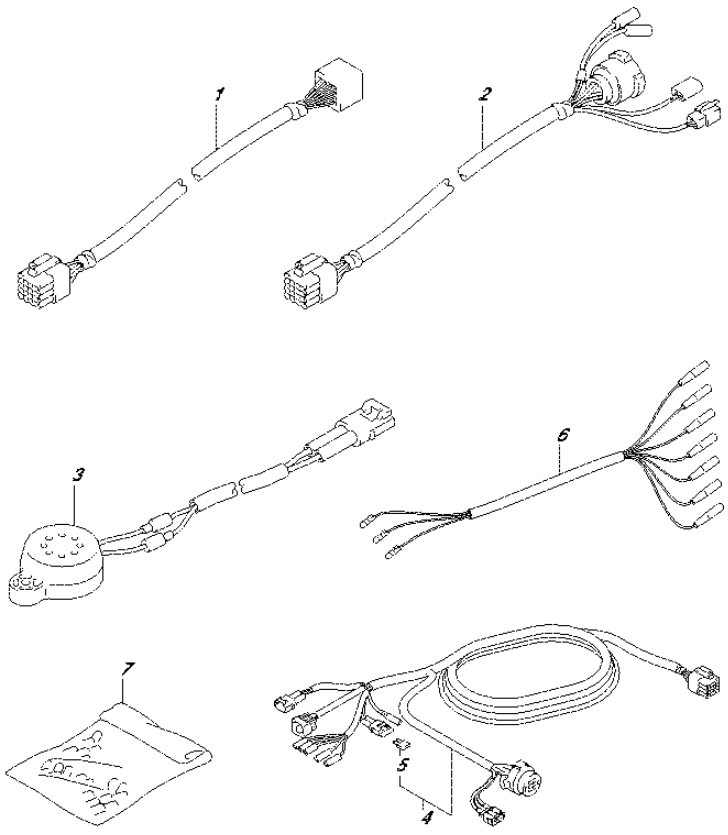

FIG.521E (4-L-5) OPT:HARNESS (DF50A E01)

REF NO.	PART NO.	DESCRIPTION	Q'TY	REMARKS
1-1	36620-93J10	WIRE ASSY, REMOCON EXTENSION	1	L:2000
1-2	36620-93J40	WIRE ASSY, REMOCON EXTENSION	1	L:3000
2	36620-93J30	WIRE ASSY, REMOCON ADAPTER	1	L:2000
3	38500-93J00	BUZZER ASSY, WARNING	1	
4-1	36620-93J02	WIRE ASSY, REMOTE CONTROL	1	L:5000
4-2	36620-93J52	WIRE ASSY, REMOTE CONTROL	1	L:3500
4-3	36620-93J62	WIRE ASSY, REMOTE CONTROL	1	L:6500
5	09481-10501	.FUSE (10A)	1	
6	36990-87D00	TERMINAL & SLEEVE SET	1	
7	36682-92E00	WIRE, MONITOR GAUGE EXTENSION	1	

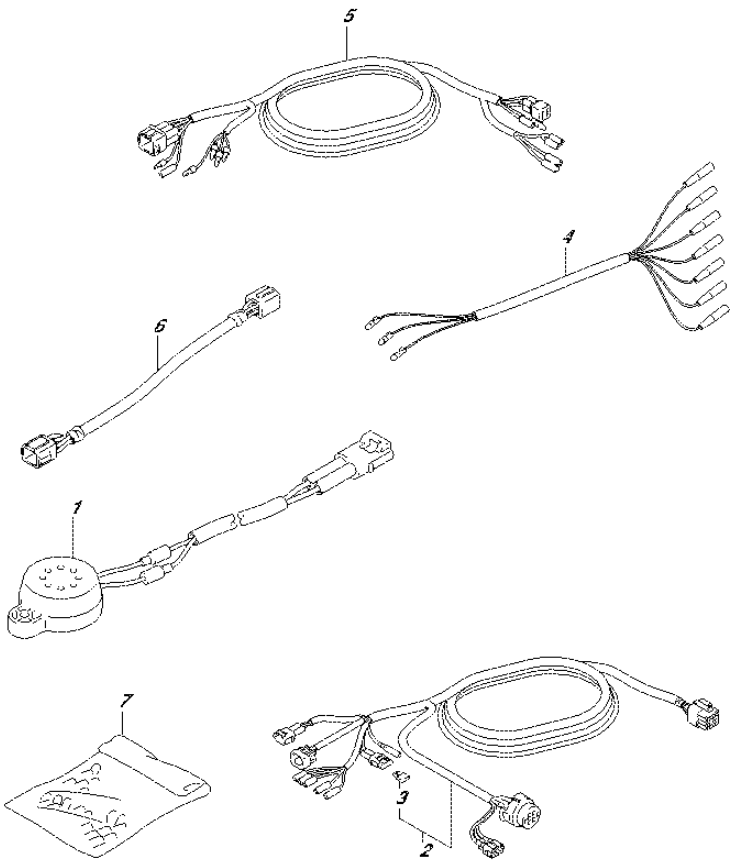

FIG.521F (4-L-6) OPT:HARNESS (DF50ATH E01)

REF NO.	PART NO.	DESCRIPTION	Q'TY	REMARKS
1	38500-93J00	BUZZER ASSY, WARNING	1	
2-1	36620-93J02	WIRE ASSY, REMOTE CONTROL	1	L:5000
2-2	36620-93J52	WIRE ASSY, REMOTE CONTROL	1	L:3500
2-3	36620-93J62	WIRE ASSY, REMOTE CONTROL	1	L:6500
3	09481-10501	.FUSE (10A)	1	
4	36990-87D00	TERMINAL & SLEEVE SET	1	
5	36630-92E00	WIRE ASSY, INSTRUMENT	1	
6	36660-94480	WIRE, MONITOR GAUGE EXTENSION	1	
7	36682-92E00	WIRE, MONITOR GAUGE EXTENSION	1	

FIG.521G

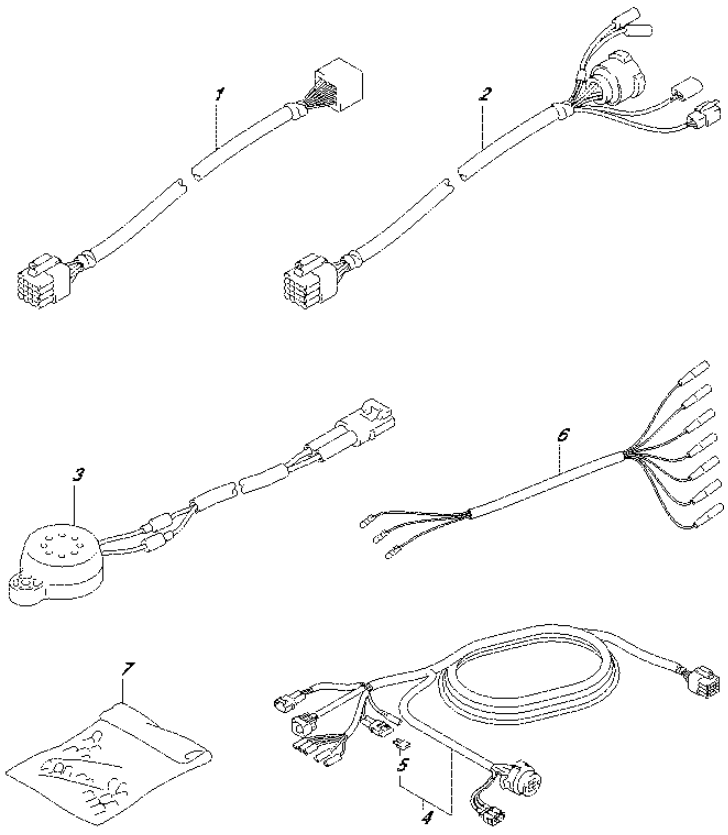

FIG.521G (4-L-7) OPT:HARNESS (DF60A E01)

REF NO.	PART NO.	DESCRIPTION	Q'TY	REMARKS
1-1	36620-93J10	WIRE ASSY, REMOCON EXTENSION	1	L:2000
1-2	36620-93J40	WIRE ASSY, REMOCON EXTENSION	1	L:3000
2	36620-93J30	WIRE ASSY, REMOCON ADAPTER	1	L:2000
3	38500-93J00	BUZZER ASSY, WARNING	1	
4-1	36620-93J02	WIRE ASSY, REMOTE CONTROL	1	L:5000
4-2	36620-93J52	WIRE ASSY, REMOTE CONTROL	1	L:3500
4-3	36620-93J62	WIRE ASSY, REMOTE CONTROL	1	L:6500
5	09481-10501	.FUSE (10A)	1	
6	36990-87D00	TERMINAL & SLEEVE SET	1	
7	36682-92E00	WIRE, MONITOR GAUGE EXTENSION	1	

FIG.521H

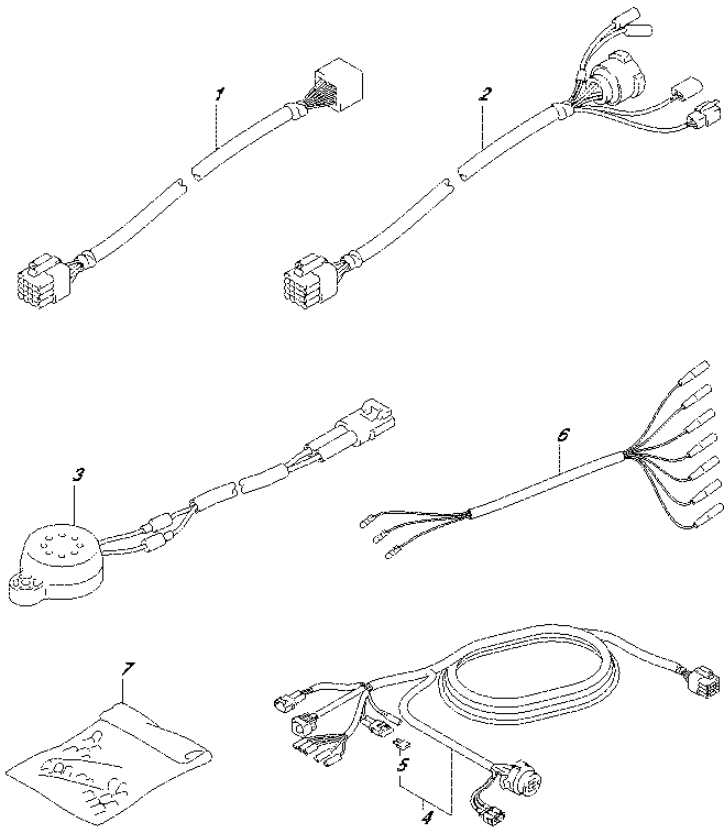

FIG.521H (4-L-8) OPT:HARNESS (DF60A E40)

REF NO.	PART NO.	DESCRIPTION	Q'TY	REMARKS
1-1	36620-93J10	WIRE ASSY, REMOCON EXTENSION	1	L:2000
1-2	36620-93J40	WIRE ASSY, REMOCON EXTENSION	1	L:3000
2	36620-93J30	WIRE ASSY, REMOCON ADAPTER	1	L:2000
3	38500-93J00	BUZZER ASSY, WARNING	1	
4-1	36620-93J02	WIRE ASSY, REMOTE CONTROL	1	L:5000
4-2	36620-93J52	WIRE ASSY, REMOTE CONTROL	1	L:3500
4-3	36620-93J62	WIRE ASSY, REMOTE CONTROL	1	L:6500
5	09481-10501	.FUSE (10A)	1	
6	36990-87D00	TERMINAL & SLEEVE SET	1	
7	36682-92E00	WIRE, MONITOR GAUGE EXTENSION	1	

FIG.521J

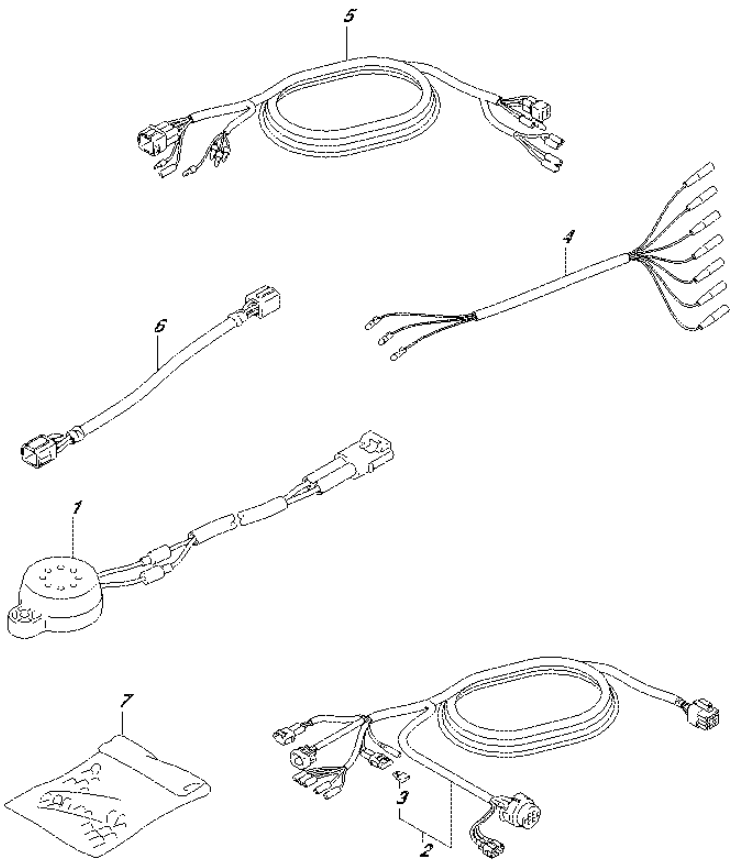

FIG.521J (4-L-9) OPT:HARNESS (DF60AQH E01)

REF NO.	PART NO.	DESCRIPTION	Q'TY	REMARKS
1	38500-93J00	BUZZER ASSY, WARNING	1	
2-1	36620-93J02	WIRE ASSY, REMOTE CONTROL	1	L:5000
2-2	36620-93J52	WIRE ASSY, REMOTE CONTROL	1	L:3500
2-3	36620-93J62	WIRE ASSY, REMOTE CONTROL	1	L:6500
3	09481-10501	.FUSE (10A)	1	
4	36990-87D00	TERMINAL & SLEEVE SET	1	
5	36630-92E00	WIRE ASSY, INSTRUMENT	1	
6	36660-94480	WIRE, MONITOR GAUGE EXTENSION	1	
7	36682-92E00	WIRE, MONITOR GAUGE EXTENSION	1	

FIG.521K

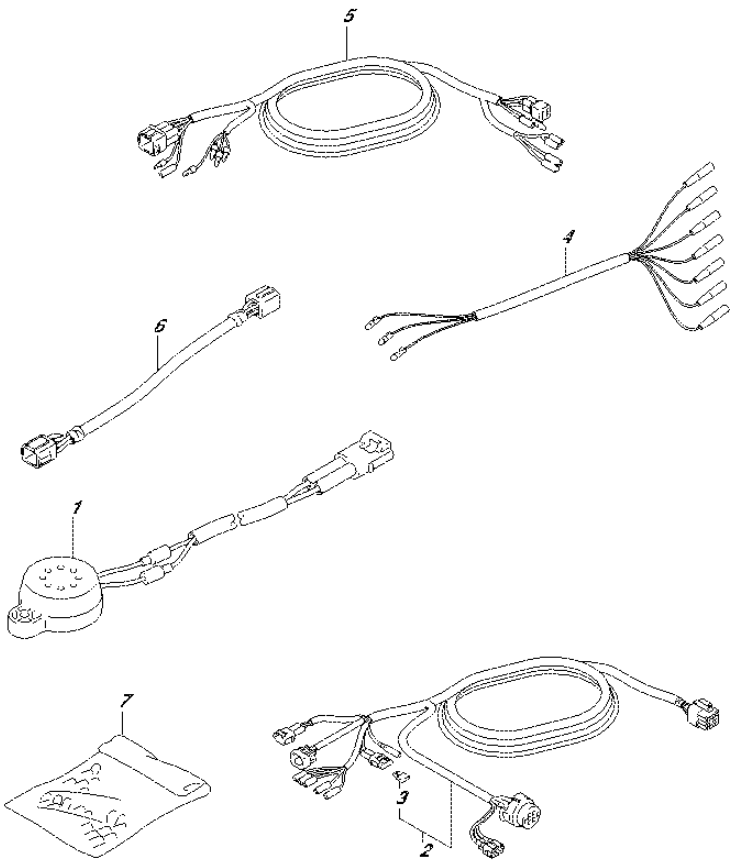

FIG.521K (4-L-10) OPT:HARNESS (DF60AQH E40)

REF NO.	PART NO.	DESCRIPTION	Q'TY	REMARKS
1	38500-93J00	BUZZER ASSY, WARNING	1	
2-1	36620-93J02	WIRE ASSY, REMOTE CONTROL	1	L:5000
2-2	36620-93J52	WIRE ASSY, REMOTE CONTROL	1	L:3500
2-3	36620-93J62	WIRE ASSY, REMOTE CONTROL	1	L:6500
3	09481-10501	.FUSE (10A)	1	
4	36990-87D00	TERMINAL & SLEEVE SET	1	
5	36630-92E00	WIRE ASSY, INSTRUMENT	1	
6	36660-94480	WIRE, MONITOR GAUGE EXTENSION	1	
7	36682-92E00	WIRE, MONITOR GAUGE EXTENSION	1	

FIG.521L

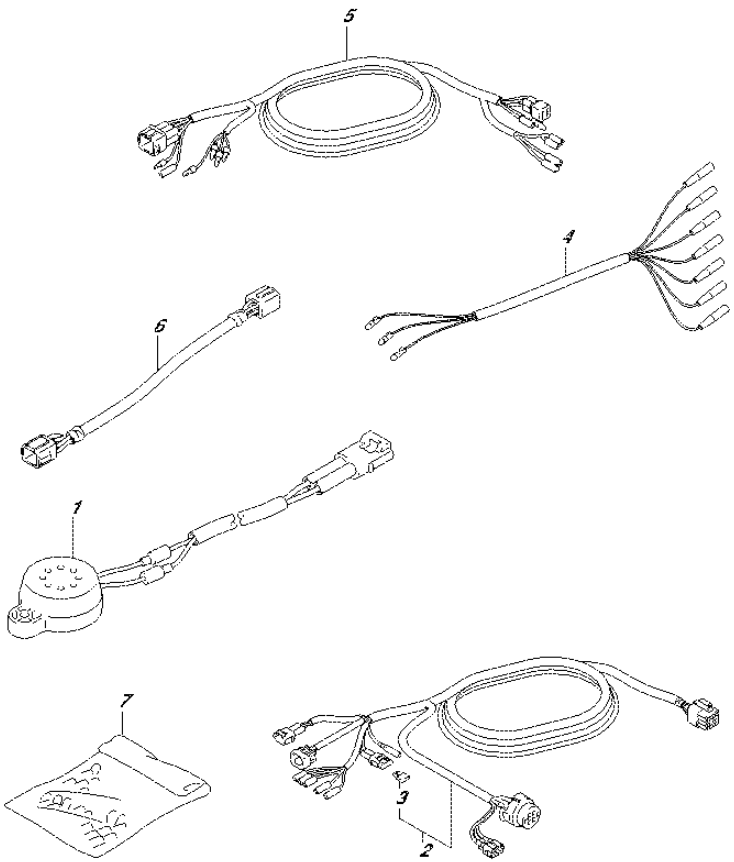

FIG.521L (4-L-11) OPT:HARNESS (DF60ATH E01)

REF NO.	PART NO.	DESCRIPTION	Q'TY	REMARKS
1	38500-93J00	BUZZER ASSY, WARNING	1	
2-1	36620-93J02	WIRE ASSY, REMOTE CONTROL	1	L:5000
2-2	36620-93J52	WIRE ASSY, REMOTE CONTROL	1	L:3500
2-3	36620-93J62	WIRE ASSY, REMOTE CONTROL	1	L:6500
3	09481-10501	.FUSE (10A)	1	
4	36990-87D00	TERMINAL & SLEEVE SET	1	
5	36630-92E00	WIRE ASSY, INSTRUMENT	1	
6	36660-94480	WIRE, MONITOR GAUGE EXTENSION	1	
7	36682-92E00	WIRE, MONITOR GAUGE EXTENSION	1	

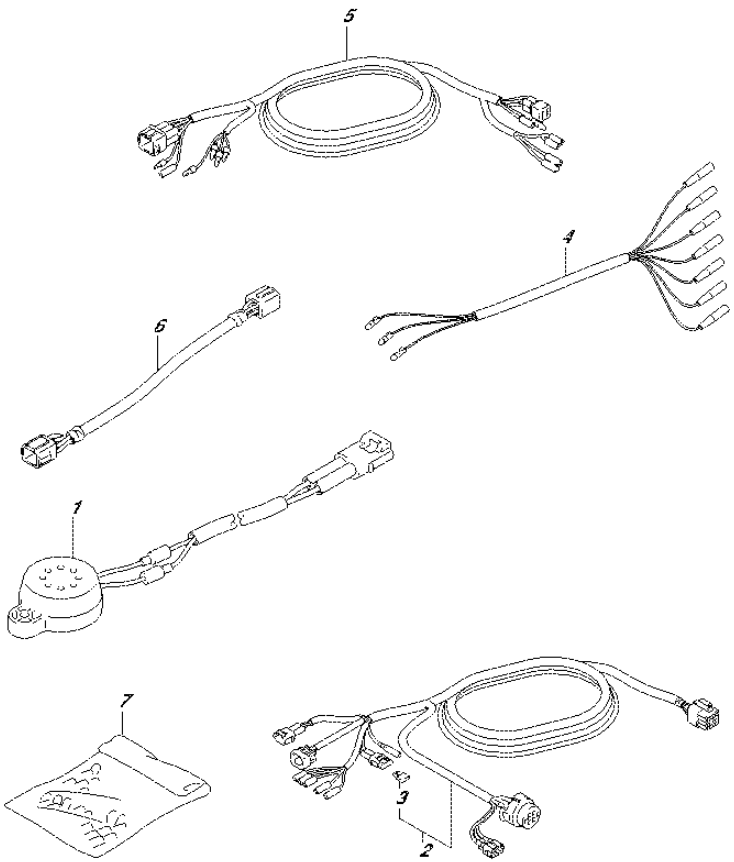

FIG.521M (4-L-12) OPT:HARNESS (DF60ATH E40)

REF NO.	PART NO.	DESCRIPTION	Q'TY	REMARKS
1	38500-93J00	BUZZER ASSY, WARNING	1	
2-1	36620-93J02	WIRE ASSY, REMOTE CONTROL	1	L:5000
2-2	36620-93J52	WIRE ASSY, REMOTE CONTROL	1	L:3500
2-3	36620-93J62	WIRE ASSY, REMOTE CONTROL	1	L:6500
3	09481-10501	.FUSE (10A)	1	
4	36990-87D00	TERMINAL & SLEEVE SET	1	
5	36630-92E00	WIRE ASSY, INSTRUMENT	1	
6	36660-94480	WIRE, MONITOR GAUGE EXTENSION	1	
7	36682-92E00	WIRE, MONITOR GAUGE EXTENSION	1	

FIG.521N

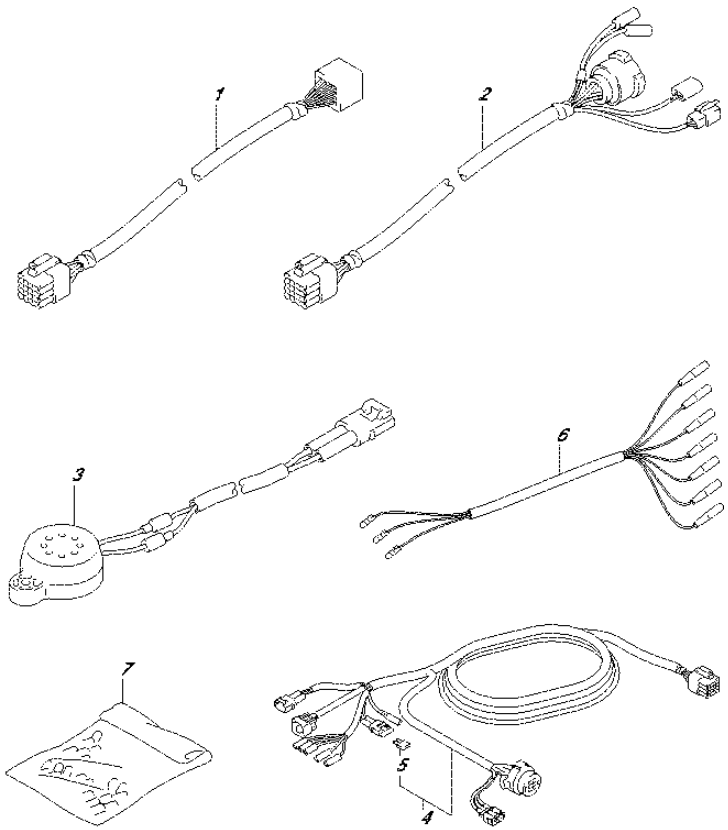

FIG.521N (4-L-13) OPT:HARNESS (DF50AVT E01)

REF NO.	PART NO.	DESCRIPTION	Q'TY	REMARKS
1-1	36620-93J10	WIRE ASSY, REMOCON EXTENSION	1	L:2000
1-2	36620-93J40	WIRE ASSY, REMOCON EXTENSION	1	L:3000
2	36620-93J30	WIRE ASSY, REMOCON ADAPTER	1	L:2000
3	38500-93J00	BUZZER ASSY, WARNING	1	
4-1	36620-93J02	WIRE ASSY, REMOTE CONTROL	1	L:5000
4-2	36620-93J52	WIRE ASSY, REMOTE CONTROL	1	L:3500
4-3	36620-93J62	WIRE ASSY, REMOTE CONTROL	1	L:6500
5	09481-10501	.FUSE (10A)	1	
6	36990-87D00	TERMINAL & SLEEVE SET	1	
7	36682-92E00	WIRE, MONITOR GAUGE EXTENSION	1	

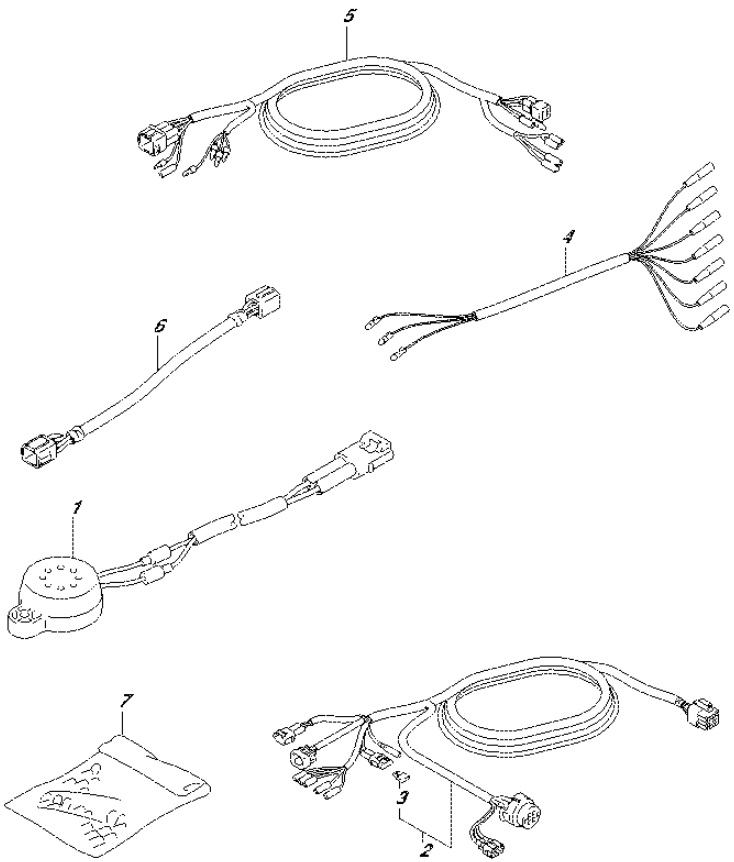

FIG.521P (4-L-14) OPT:HARNESS (DF50AVTH E01)

REF NO.	PART NO.	DESCRIPTION	Q'TY	REMARKS
1	38500-93J00	BUZZER ASSY, WARNING	1	
2-1	36620-93J02	WIRE ASSY, REMOTE CONTROL	1	L:5000
2-2	36620-93J52	WIRE ASSY, REMOTE CONTROL	1	L:3500
2-3	36620-93J62	WIRE ASSY, REMOTE CONTROL	1	L:6500
3	09481-10501	.FUSE (10A)	1	
4	36990-87D00	TERMINAL & SLEEVE SET	1	
5	36630-92E00	WIRE ASSY, INSTRUMENT	1	
6	36660-94480	WIRE, MONITOR GAUGE EXTENSION	1	
7	36682-92E00	WIRE, MONITOR GAUGE EXTENSION	1	

FIG.521R

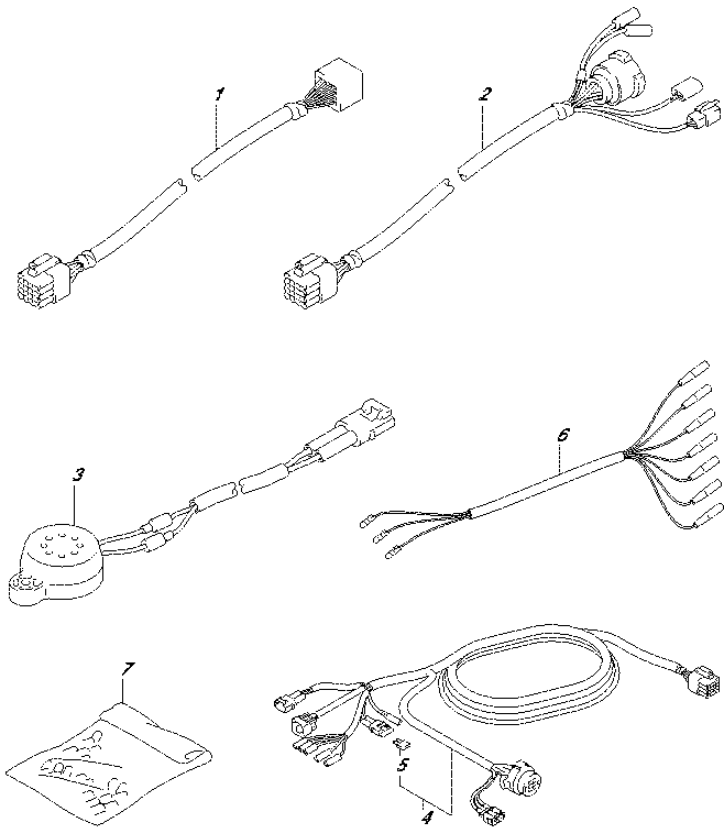

FIG.521R (4-L-15) OPT:HARNESS (DF60AVT E01)

REF NO.	PART NO.	DESCRIPTION	Q'TY	REMARKS
1-1	36620-93J10	WIRE ASSY, REMOCON EXTENSION	1	L:2000
1-2	36620-93J40	WIRE ASSY, REMOCON EXTENSION	1	L:3000
2	36620-93J30	WIRE ASSY, REMOCON ADAPTER	1	L:2000
3	38500-93J00	BUZZER ASSY, WARNING	1	
4-1	36620-93J02	WIRE ASSY, REMOTE CONTROL	1	L:5000
4-2	36620-93J52	WIRE ASSY, REMOTE CONTROL	1	L:3500
4-3	36620-93J62	WIRE ASSY, REMOTE CONTROL	1	L:6500
5	09481-10501	.FUSE (10A)	1	
6	36990-87D00	TERMINAL & SLEEVE SET	1	
7	36682-92E00	WIRE, MONITOR GAUGE EXTENSION	1	

FIG.521S

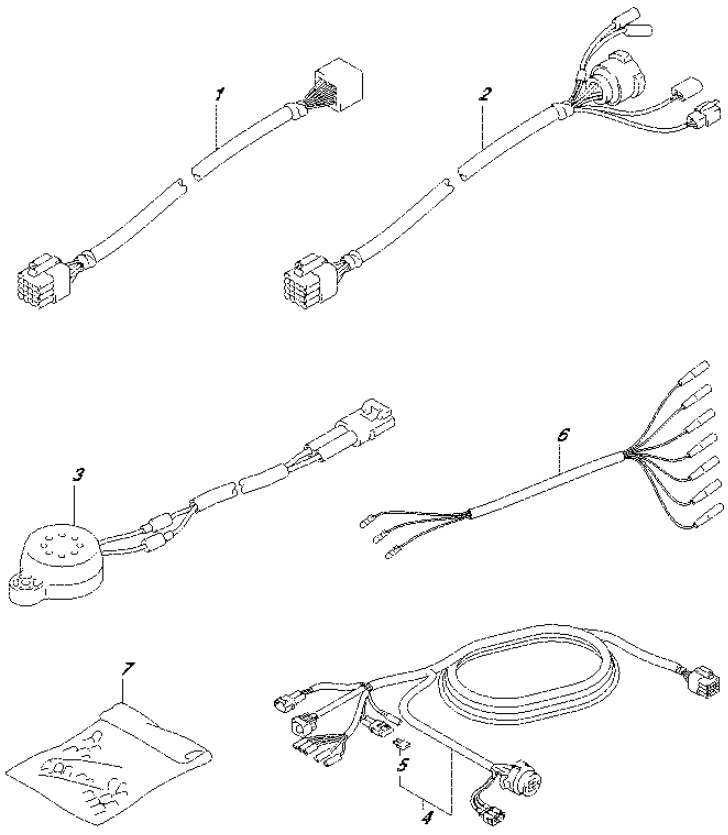

FIG.521S (5-B-2) OPT:HARNESS (DF60AVT E40)

REF NO.	PART NO.	DESCRIPTION	Q'TY	REMARKS
1-1	36620-93J10	WIRE ASSY, REMOCON EXTENSION	1	L:2000
1-2	36620-93J40	WIRE ASSY, REMOCON EXTENSION	1	L:3000
2	36620-93J30	WIRE ASSY, REMOCON ADAPTER	1	L:2000
3	38500-93J00	BUZZER ASSY, WARNING	1	
4-1	36620-93J02	WIRE ASSY, REMOTE CONTROL	1	L:5000
4-2	36620-93J52	WIRE ASSY, REMOTE CONTROL	1	L:3500
4-3	36620-93J62	WIRE ASSY, REMOTE CONTROL	1	L:6500
5	09481-10501	.FUSE (10A)	1	
6	36990-87D00	TERMINAL & SLEEVE SET	1	
7	36682-92E00	WIRE, MONITOR GAUGE EXTENSION	1	

FIG.521T

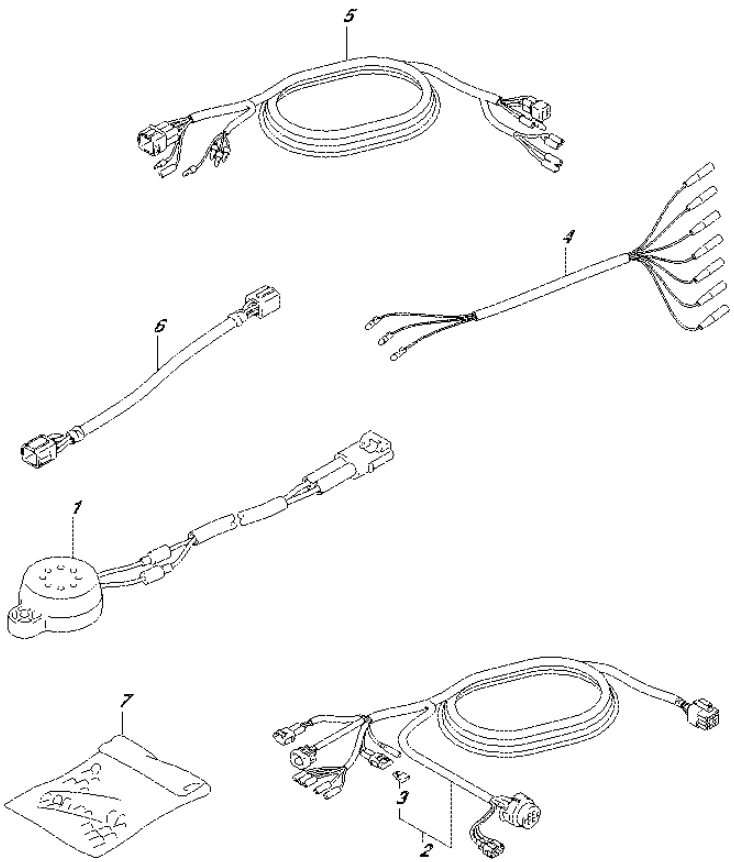

FIG.521T (5-B-3) OPT:HARNESS (DF60AVTH E01)

REF NO.	PART NO.	DESCRIPTION	Q'TY	REMARKS
1	38500-93J00	BUZZER ASSY, WARNING	1	
2-1	36620-93J02	WIRE ASSY, REMOTE CONTROL	1	L:5000
2-2	36620-93J52	WIRE ASSY, REMOTE CONTROL	1	L:3500
2-3	36620-93J62	WIRE ASSY, REMOTE CONTROL	1	L:6500
3	09481-10501	.FUSE (10A)	1	
4	36990-87D00	TERMINAL & SLEEVE SET	1	
5	36630-92E00	WIRE ASSY, INSTRUMENT	1	
6	36660-94480	WIRE, MONITOR GAUGE EXTENSION	1	
7	36682-92E00	WIRE, MONITOR GAUGE EXTENSION	1	

FIG.521U

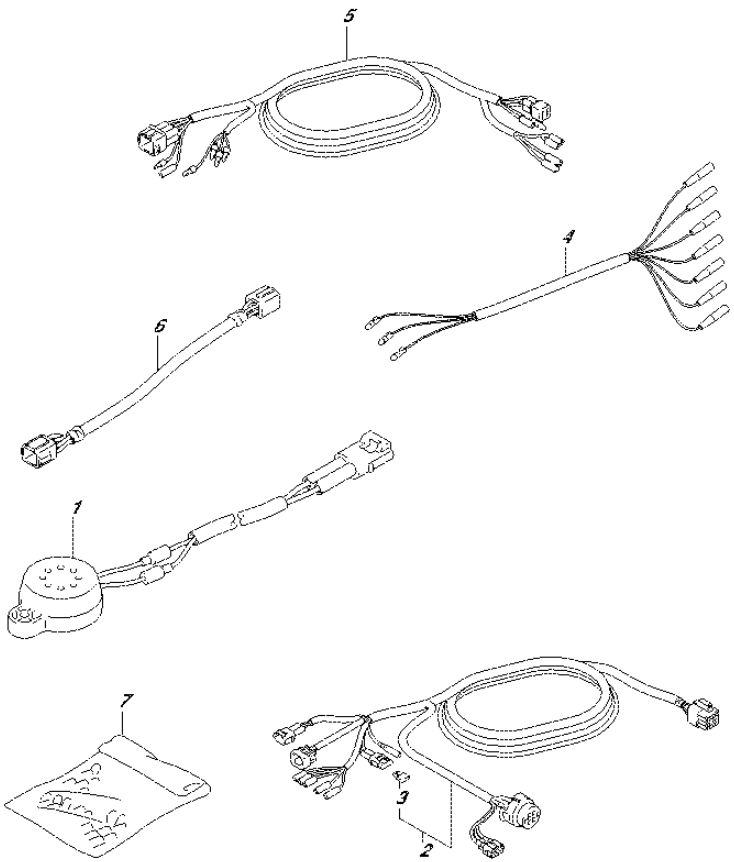

FIG.521U (5-B-4) OPT:HARNESS (DF60AVTH E40)

REF NO.	PART NO.	DESCRIPTION	Q'TY	REMARKS
1	38500-93J00	BUZZER ASSY, WARNING	1	
2-1	36620-93J02	WIRE ASSY, REMOTE CONTROL	1	L:5000
2-2	36620-93J52	WIRE ASSY, REMOTE CONTROL	1	L:3500
2-3	36620-93J62	WIRE ASSY, REMOTE CONTROL	1	L:6500
3	09481-10501	.FUSE (10A)	1	
4	36990-87D00	TERMINAL & SLEEVE SET	1	
5	36630-92E00	WIRE ASSY, INSTRUMENT	1	
6	36660-94480	WIRE, MONITOR GAUGE EXTENSION	1	
7	36682-92E00	WIRE, MONITOR GAUGE EXTENSION	1	

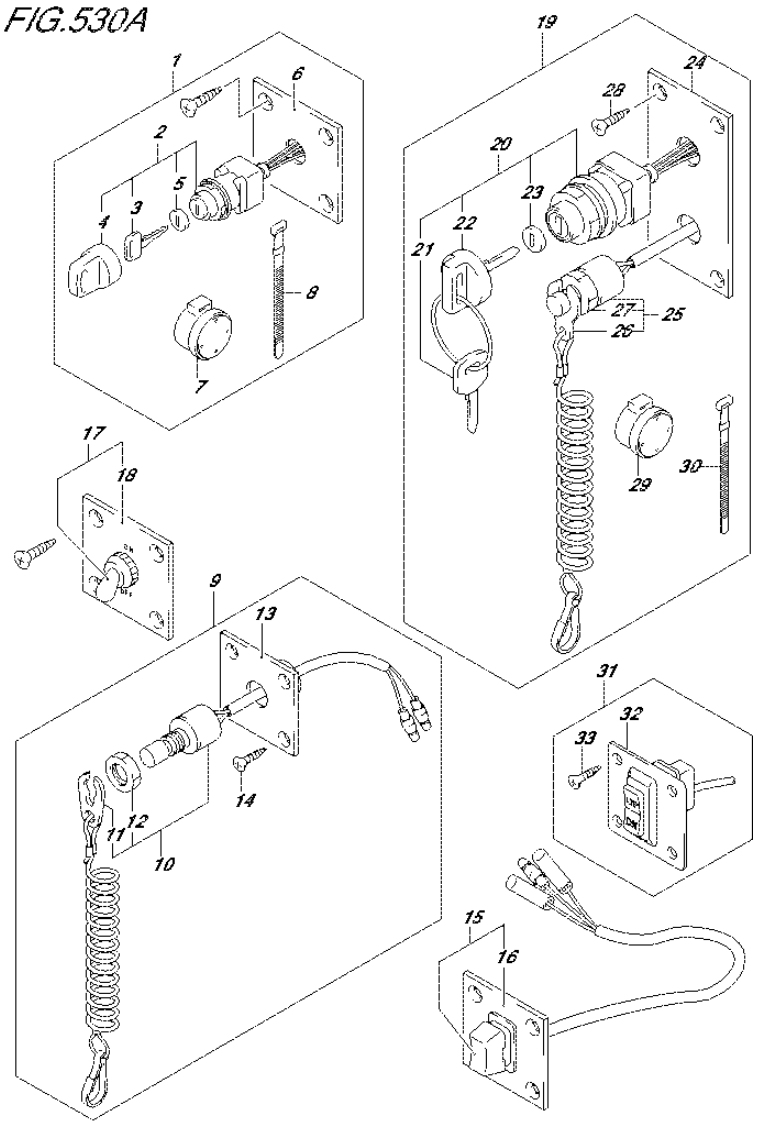

FIG.530A (5-B-5) OPT:SWITCH (DF40A E01)

REF NO.	PART NO.	DESCRIPTION	Q'TY	REMARKS
1	37100-96J00	PANEL ASSY, IGNITION SW	1	
2	37110-93J01	.SWITCH ASSY, IGNITION	1	
3-1	37141-99E00	..KEY (931)	2	
3-2	37141-99E10	..KEY (932)	2	
3-3	37141-99E20	..KEY (933)	2	
3-4	37141-99E30	..KEY (934)	2	
3-5	37141-99E40	..KEY (935)	2	
3-6	37141-99E50	..KEY (936)	2	
3-7	37141-99E60	..KEY (937)	2	
3-8	37141-99E70	..KEY (938)	2	
3-9	37141-99E80	..KEY (939)	2	
3-10	37141-99E90	..KEY (940)	2	
3-11	37141-99EA0	..KEY (941)	2	
3-12	37141-99EB0	..KEY (942)	2	
4	37143-99E00	..CAP, KEY	1	
5	37149-93J00	..CAP, CYLINDER BODY	1	
6	37139-99E00	.PANEL, IGNITION SW	1	
7	38500-93J90	.BUZZER ASSY, WARNING	1	
8	09407-08401	.CLAMP (L:80)	1	
9	37803-93J04	PANEL ASSY, EMERGENCY SW	1	
10	37820-93J04	.SWITCH ASSY, EMERGENCY	1	
11	37823-92E01	..PLATE, LOCK	1	
12	37826-92J00	..NUT	1	
13	37825-99E00	.PANEL, EMERGENCY SW	1	
14	03122-05165	.SCREW	4	
15	37805-93J00	PANEL ASSY, PTT SW	1	
16	37855-99E00	.PANEL, PTT SW	1	
17	37210-93J00	PANEL ASSY, LIGHTING SW	1	
18	37212-93J00	.PANEL, LIGHTING SW	1	
19	37100-96J24	PANEL ASSY, ENGINE SW	1	
20	37110-93J01	.SWITCH ASSY, IGNITION	1	
21-1	37141-99E00	..KEY (931)	2	
21-2	37141-99E10	..KEY (932)	2	
21-3	37141-99E20	..KEY (933)	2	
21-4	37141-99E30	..KEY (934)	2	
21-5	37141-99E40	..KEY (935)	2	

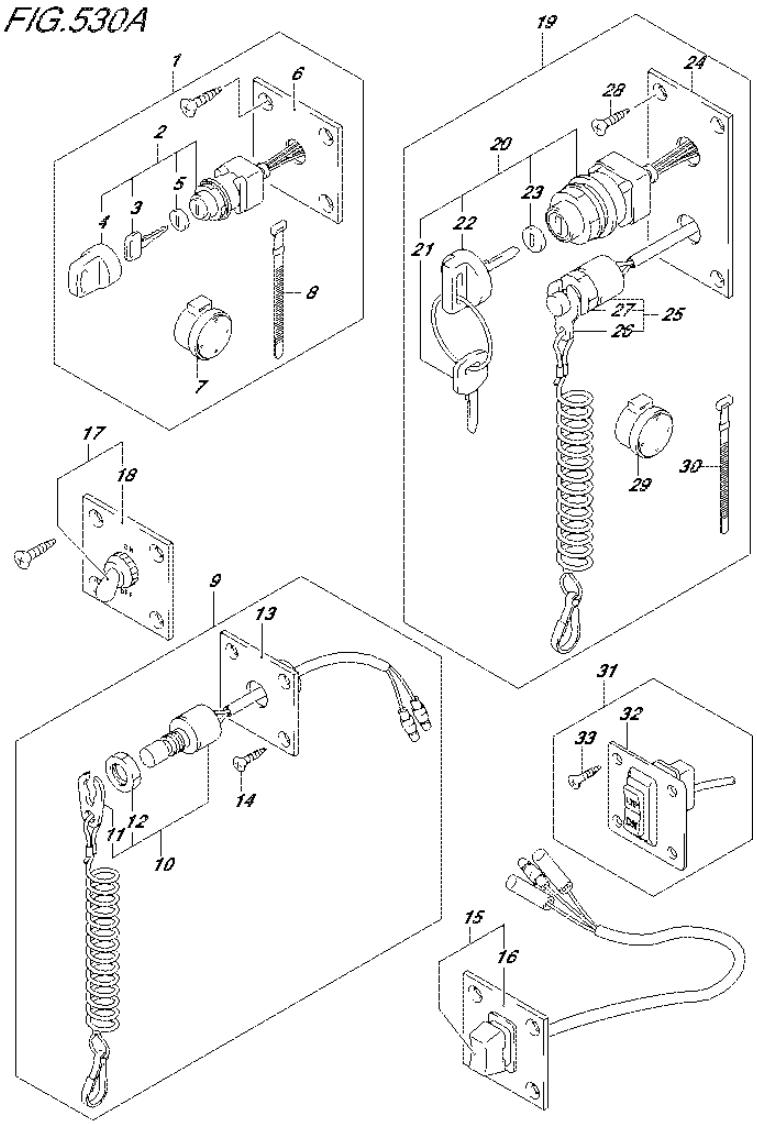

DF60A_E01_016_530A
OPT:SWITCH

FIG.530A (5-B-6) OPT:SWITCH (DF40A E01)

REF NO.	PART NO.	DESCRIPTION	Q'TY	REMARKS
21-6	37141-99E50	..KEY (936)	2	
21-7	37141-99E60	..KEY (937)	2	
21-8	37141-99E70	..KEY (938)	2	
21-9	37141-99E80	..KEY (939)	2	
21-10	37141-99E90	..KEY (940)	2	
21-11	37141-99EA0	..KEY (941)	2	
21-12	37141-99EB0	..KEY (942)	2	
22	37143-99E00	..CAP, KEY	1	
23	37149-93J00	..CAP, CYLINDER BODY	1	
24	37139-99E20	.PANEL, IGNITION SWITCH	1	
25	37820-93J04	.SWITCH ASSY, EMERGENCY	1	
26	37823-92E01	..PLATE ASSY, EMERGENCY	1	
27	37826-92J00	..NUT	1	
28	03121-0516A	.SCREW	4	
29	38500-93J90	.BUZZER ASSY, WARNING	1	
30	09407-08401	.CLAMP (L:80)	1	
31	37860-87L00	PANEL ASSY, TROLLING CONTROL	1	
32	37862-87L00	.PANEL	1	
33	09131-05004	.SCREW (5X16)	4	

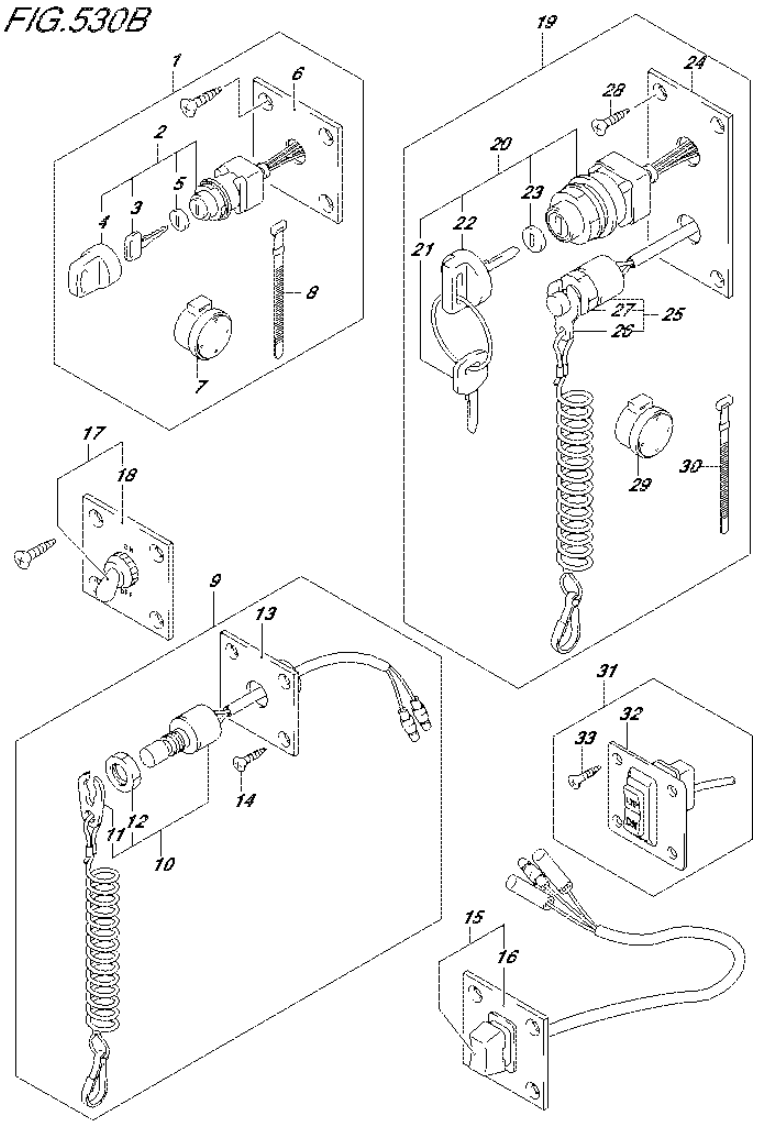

DF60A_E01_016_530B
OPT:SWITCH

FIG.530B (5-B-7) OPT:SWITCH (DF40AST E34)

REF NO.	PART NO.	DESCRIPTION	Q'TY	REMARKS
1	37100-96J00	PANEL ASSY, IGNITION SW	1	
2	37110-93J01	.SWITCH ASSY, IGNITION	1	
3-1	37141-99E00	..KEY (931)	2	
3-2	37141-99E10	..KEY (932)	2	
3-3	37141-99E20	..KEY (933)	2	
3-4	37141-99E30	..KEY (934)	2	
3-5	37141-99E40	..KEY (935)	2	
3-6	37141-99E50	..KEY (936)	2	
3-7	37141-99E60	..KEY (937)	2	
3-8	37141-99E70	..KEY (938)	2	
3-9	37141-99E80	..KEY (939)	2	
3-10	37141-99E90	..KEY (940)	2	
3-11	37141-99EA0	..KEY (941)	2	
3-12	37141-99EB0	..KEY (942)	2	
4	37143-99E00	..CAP, KEY	1	
5	37149-93J00	..CAP, CYLINDER BODY	1	
6	37139-99E00	.PANEL, IGNITION SW	1	
7	38500-93J90	.BUZZER ASSY, WARNING	1	
8	09407-08401	.CLAMP (L:80)	1	
9	37803-93J04	PANEL ASSY, EMERGENCY SW	1	
10	37820-93J04	.SWITCH ASSY, EMERGENCY	1	
11	37823-92E01	..PLATE, LOCK	1	
12	37826-92J00	..NUT	1	
13	37825-99E00	.PANEL, EMERGENCY SW	1	
14	03122-05165	.SCREW	4	
15	37805-93J00	PANEL ASSY, PTT SW	1	
16	37855-99E00	.PANEL, PTT SW	1	
17	37210-93J00	PANEL ASSY, LIGHTING SW	1	
18	37212-93J00	.PANEL, LIGHTING SW	1	
19	37100-96J24	PANEL ASSY, ENGINE SW	1	
20	37110-93J01	.SWITCH ASSY, IGNITION	1	
21-1	37141-99E00	..KEY (931)	2	
21-2	37141-99E10	..KEY (932)	2	
21-3	37141-99E20	..KEY (933)	2	
21-4	37141-99E30	..KEY (934)	2	
21-5	37141-99E40	..KEY (935)	2	

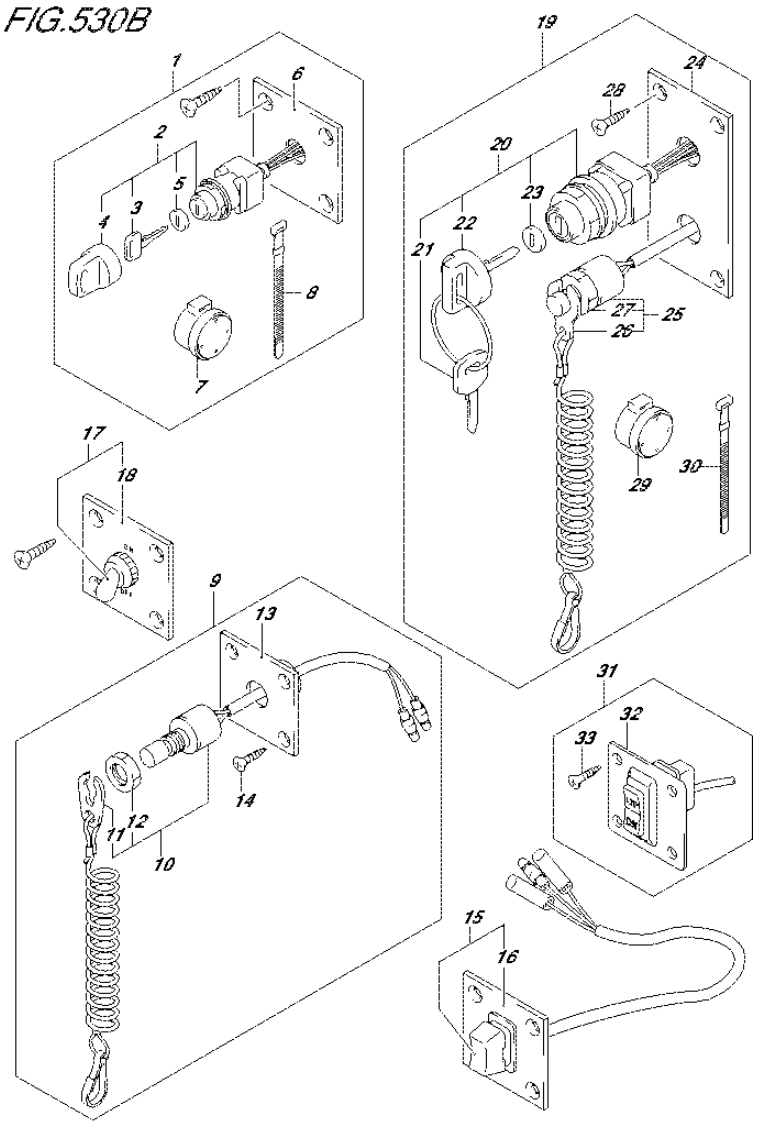

DF60A_E01_016_530B
OPT:SWITCH

FIG.530B (5-B-8) OPT:SWITCH (DF40AST E34)

REF NO.	PART NO.	DESCRIPTION	Q'TY	REMARKS
21-6	37141-99E50	..KEY (936)	2	
21-7	37141-99E60	..KEY (937)	2	
21-8	37141-99E70	..KEY (938)	2	
21-9	37141-99E80	..KEY (939)	2	
21-10	37141-99E90	..KEY (940)	2	
21-11	37141-99EA0	..KEY (941)	2	
21-12	37141-99EB0	..KEY (942)	2	
22	37143-99E00	..CAP, KEY	1	
23	37149-93J00	..CAP, CYLINDER BODY	1	
24	37139-99E20	.PANEL, IGNITION SWITCH	1	
25	37820-93J04	.SWITCH ASSY, EMERGENCY	1	
26	37823-92E01	..PLATE ASSY, EMERGENCY	1	
27	37826-92J00	..NUT	1	
28	03121-0516A	.SCREW	4	
29	38500-93J90	.BUZZER ASSY, WARNING	1	
30	09407-08401	.CLAMP (L:80)	1	
31	37860-87L00	PANEL ASSY, TROLLING CONTROL	1	
32	37862-87L00	.PANEL	1	
33	09131-05004	.SCREW (5X16)	4	

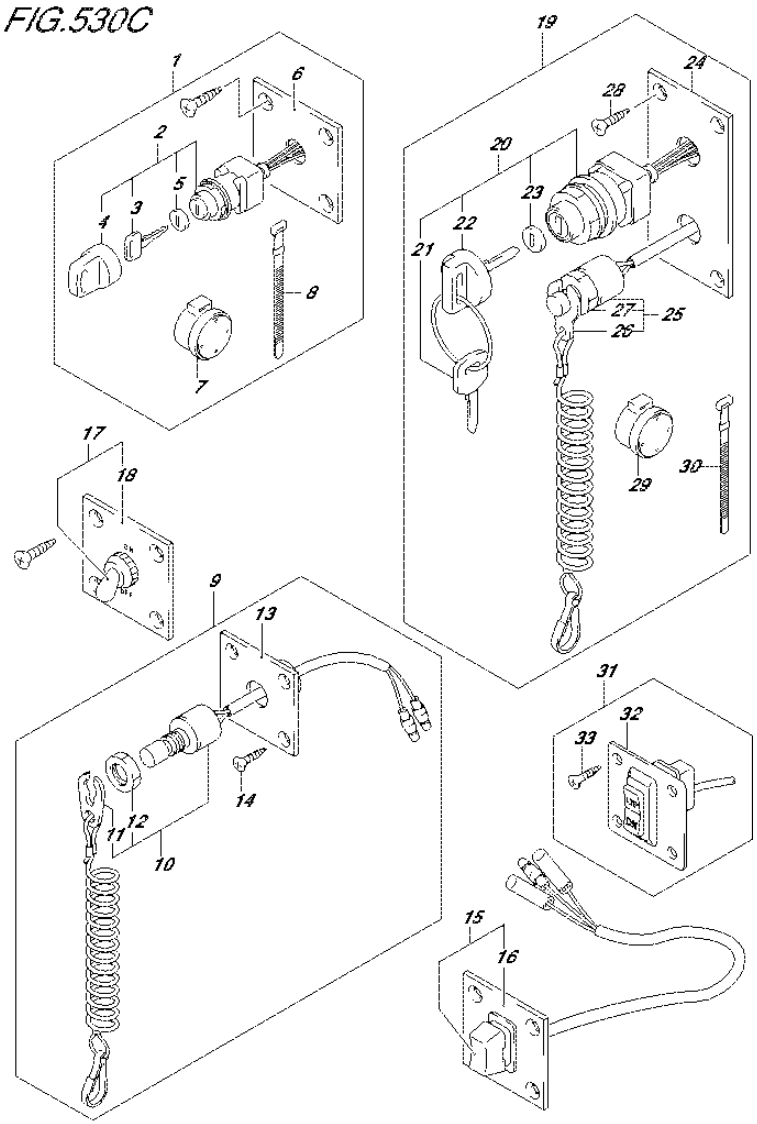

DF60A_E01_016_530C
OPT:SWITCH

FIG.530C (5-B-9) OPT:SWITCH (DF50A E01)

REF NO.	PART NO.	DESCRIPTION	Q'TY	REMARKS
1	37100-96J00	PANEL ASSY, IGNITION SW	1	
2	37110-93J01	.SWITCH ASSY, IGNITION	1	
3-1	37141-99E00	..KEY (931)	2	
3-2	37141-99E10	..KEY (932)	2	
3-3	37141-99E20	..KEY (933)	2	
3-4	37141-99E30	..KEY (934)	2	
3-5	37141-99E40	..KEY (935)	2	
3-6	37141-99E50	..KEY (936)	2	
3-7	37141-99E60	..KEY (937)	2	
3-8	37141-99E70	..KEY (938)	2	
3-9	37141-99E80	..KEY (939)	2	
3-10	37141-99E90	..KEY (940)	2	
3-11	37141-99EA0	..KEY (941)	2	
3-12	37141-99EB0	..KEY (942)	2	
4	37143-99E00	..CAP, KEY	1	
5	37149-93J00	..CAP, CYLINDER BODY	1	
6	37139-99E00	.PANEL, IGNITION SW	1	
7	38500-93J90	.BUZZER ASSY, WARNING	1	
8	09407-08401	.CLAMP (L:80)	1	
9	37803-93J04	PANEL ASSY, EMERGENCY SW	1	
10	37820-93J04	.SWITCH ASSY, EMERGENCY	1	
11	37823-92E01	..PLATE, LOCK	1	
12	37826-92J00	..NUT	1	
13	37825-99E00	.PANEL, EMERGENCY SW	1	
14	03122-05165	.SCREW	4	
15	37805-93J00	PANEL ASSY, PTT SW	1	
16	37855-99E00	.PANEL, PTT SW	1	
17	37210-93J00	PANEL ASSY, LIGHTING SW	1	
18	37212-93J00	.PANEL, LIGHTING SW	1	
19	37100-96J24	PANEL ASSY, ENGINE SW	1	
20	37110-93J01	.SWITCH ASSY, IGNITION	1	
21-1	37141-99E00	..KEY (931)	2	
21-2	37141-99E10	..KEY (932)	2	
21-3	37141-99E20	..KEY (933)	2	
21-4	37141-99E30	..KEY (934)	2	
21-5	37141-99E40	..KEY (935)	2	

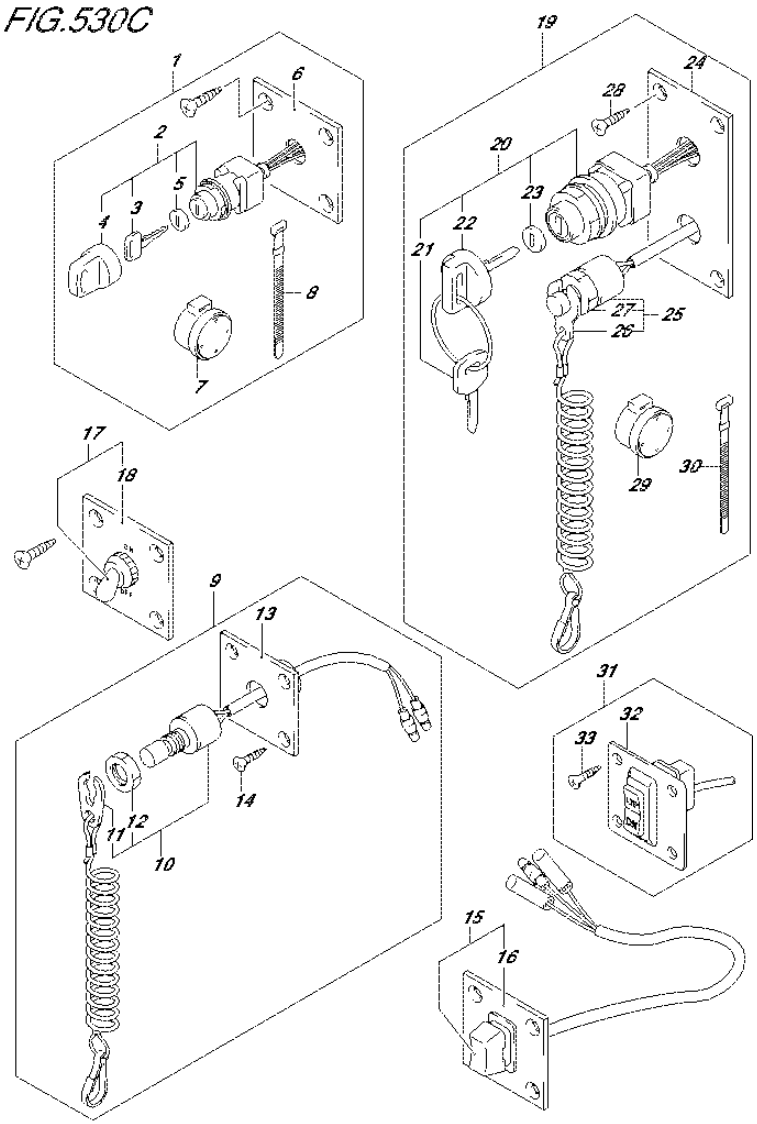

FIG.530C (5-B-10) OPT:SWITCH (DF50A E01)

REF NO.	PART NO.	DESCRIPTION	Q'TY	REMARKS
21-6	37141-99E50	..KEY (936)	2	
21-7	37141-99E60	..KEY (937)	2	
21-8	37141-99E70	..KEY (938)	2	
21-9	37141-99E80	..KEY (939)	2	
21-10	37141-99E90	..KEY (940)	2	
21-11	37141-99EA0	..KEY (941)	2	
21-12	37141-99EB0	..KEY (942)	2	
22	37143-99E00	..CAP, KEY	1	
23	37149-93J00	..CAP, CYLINDER BODY	1	
24	37139-99E20	.PANEL, IGNITION SWITCH	1	
25	37820-93J04	.SWITCH ASSY, EMERGENCY	1	
26	37823-92E01	..PLATE ASSY, EMERGENCY	1	
27	37826-92J00	..NUT	1	
28	03121-0516A	.SCREW	4	
29	38500-93J90	.BUZZER ASSY, WARNING	1	
30	09407-08401	.CLAMP (L:80)	1	
31	37860-87L00	PANEL ASSY, TROLLING CONTROL	1	
32	37862-87L00	.PANEL	1	
33	09131-05004	.SCREW (5X16)	4	

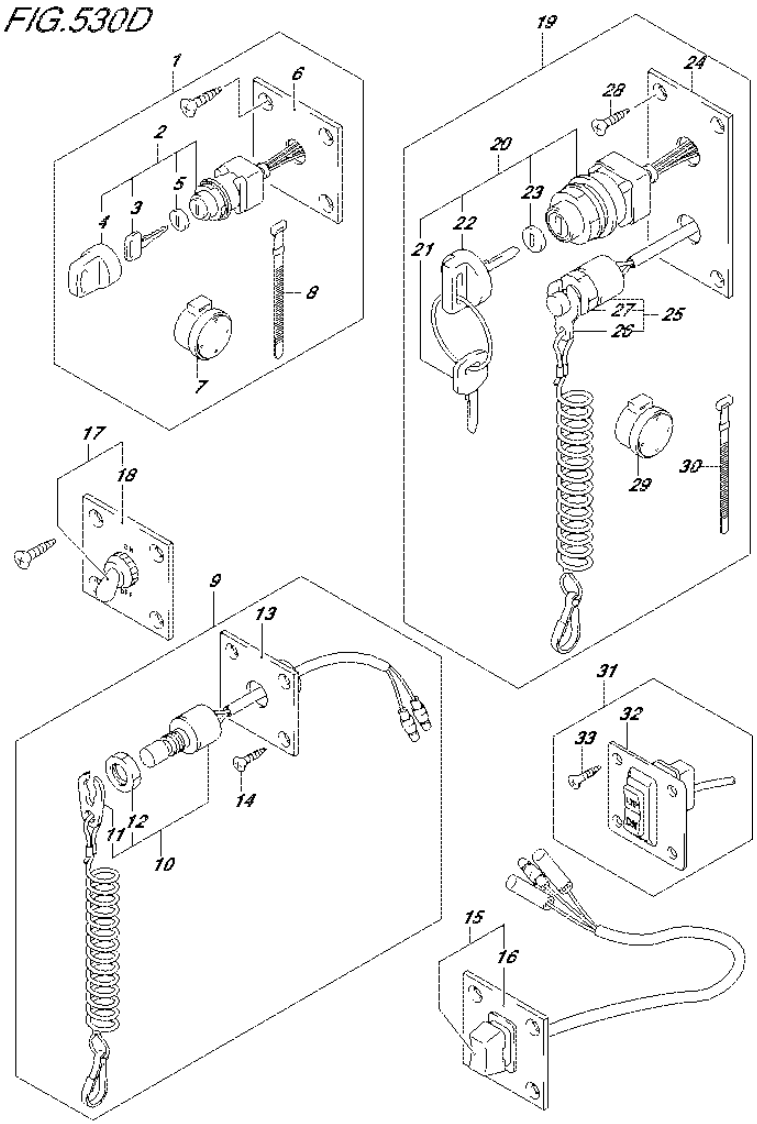

FIG.530D (5-B-11) OPT:SWITCH (DF60A E01)

REF NO.	PART NO.	DESCRIPTION	Q'TY	REMARKS
1	37100-96J00	PANEL ASSY, IGNITION SW	1	
2	37110-93J01	.SWITCH ASSY, IGNITION	1	
3-1	37141-99E00	..KEY (931)	2	
3-2	37141-99E10	..KEY (932)	2	
3-3	37141-99E20	..KEY (933)	2	
3-4	37141-99E30	..KEY (934)	2	
3-5	37141-99E40	..KEY (935)	2	
3-6	37141-99E50	..KEY (936)	2	
3-7	37141-99E60	..KEY (937)	2	
3-8	37141-99E70	..KEY (938)	2	
3-9	37141-99E80	..KEY (939)	2	
3-10	37141-99E90	..KEY (940)	2	
3-11	37141-99EA0	..KEY (941)	2	
3-12	37141-99EB0	..KEY (942)	2	
4	37143-99E00	..CAP, KEY	1	
5	37149-93J00	..CAP, CYLINDER BODY	1	
6	37139-99E00	.PANEL, IGNITION SW	1	
7	38500-93J90	.BUZZER ASSY, WARNING	1	
8	09407-08401	.CLAMP (L:80)	1	
9	37803-93J04	PANEL ASSY, EMERGENCY SW	1	
10	37820-93J04	.SWITCH ASSY, EMERGENCY	1	
11	37823-92E01	..PLATE, LOCK	1	
12	37826-92J00	..NUT	1	
13	37825-99E00	.PANEL, EMERGENCY SW	1	
14	03122-05165	.SCREW	4	
15	37805-93J00	PANEL ASSY, PTT SW	1	
16	37855-99E00	.PANEL, PTT SW	1	
17	37210-93J00	PANEL ASSY, LIGHTING SW	1	
18	37212-93J00	.PANEL, LIGHTING SW	1	
19	37100-96J24	PANEL ASSY, ENGINE SW	1	
20	37110-93J01	.SWITCH ASSY, IGNITION	1	
21-1	37141-99E00	..KEY (931)	2	
21-2	37141-99E10	..KEY (932)	2	
21-3	37141-99E20	..KEY (933)	2	
21-4	37141-99E30	..KEY (934)	2	
21-5	37141-99E40	..KEY (935)	2	

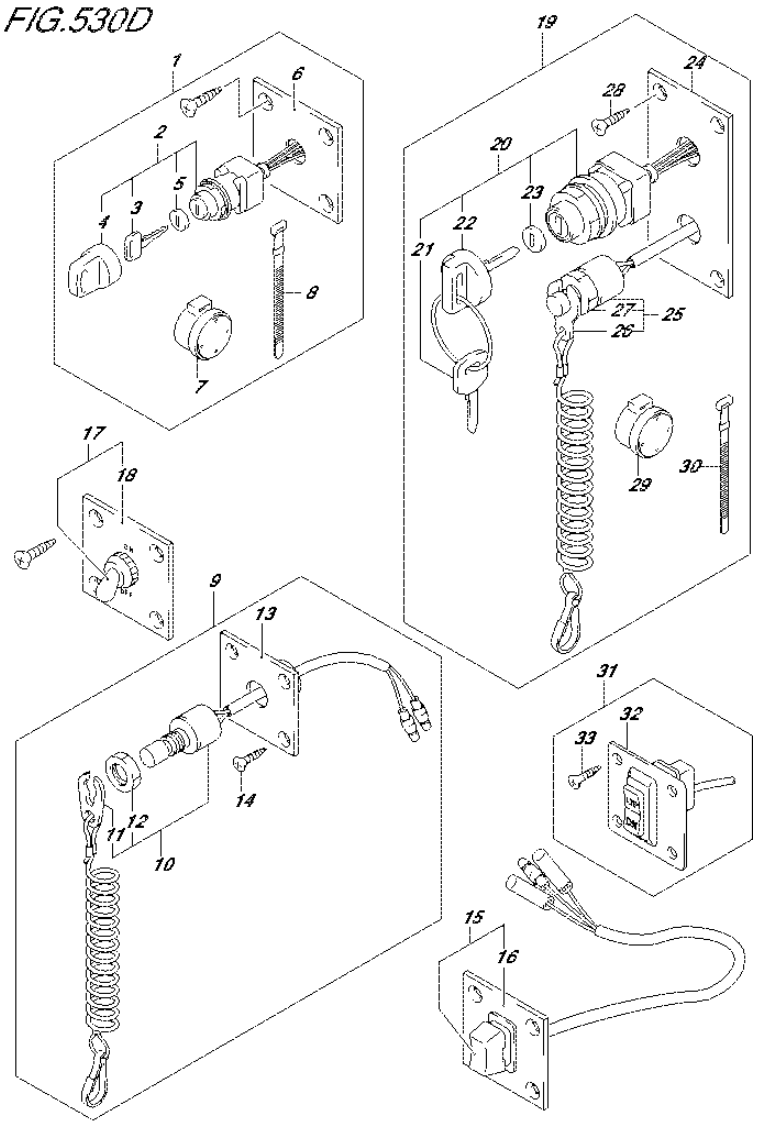

FIG.530D (5-B-12) OPT:SWITCH (DF60A E01)

REF NO.	PART NO.	DESCRIPTION	Q'TY	REMARKS
21-6	37141-99E50	..KEY (936)	2	
21-7	37141-99E60	..KEY (937)	2	
21-8	37141-99E70	..KEY (938)	2	
21-9	37141-99E80	..KEY (939)	2	
21-10	37141-99E90	..KEY (940)	2	
21-11	37141-99EA0	..KEY (941)	2	
21-12	37141-99EB0	..KEY (942)	2	
22	37143-99E00	..CAP, KEY	1	
23	37149-93J00	..CAP, CYLINDER BODY	1	
24	37139-99E20	.PANEL, IGNITION SWITCH	1	
25	37820-93J04	.SWITCH ASSY, EMERGENCY	1	
26	37823-92E01	..PLATE ASSY, EMERGENCY	1	
27	37826-92J00	..NUT	1	
28	03121-0516A	.SCREW	4	
29	38500-93J90	.BUZZER ASSY, WARNING	1	
30	09407-08401	.CLAMP (L:80)	1	
31	37860-87L00	PANEL ASSY, TROLLING CONTROL	1	
32	37862-87L00	.PANEL	1	
33	09131-05004	.SCREW (5X16)	4	

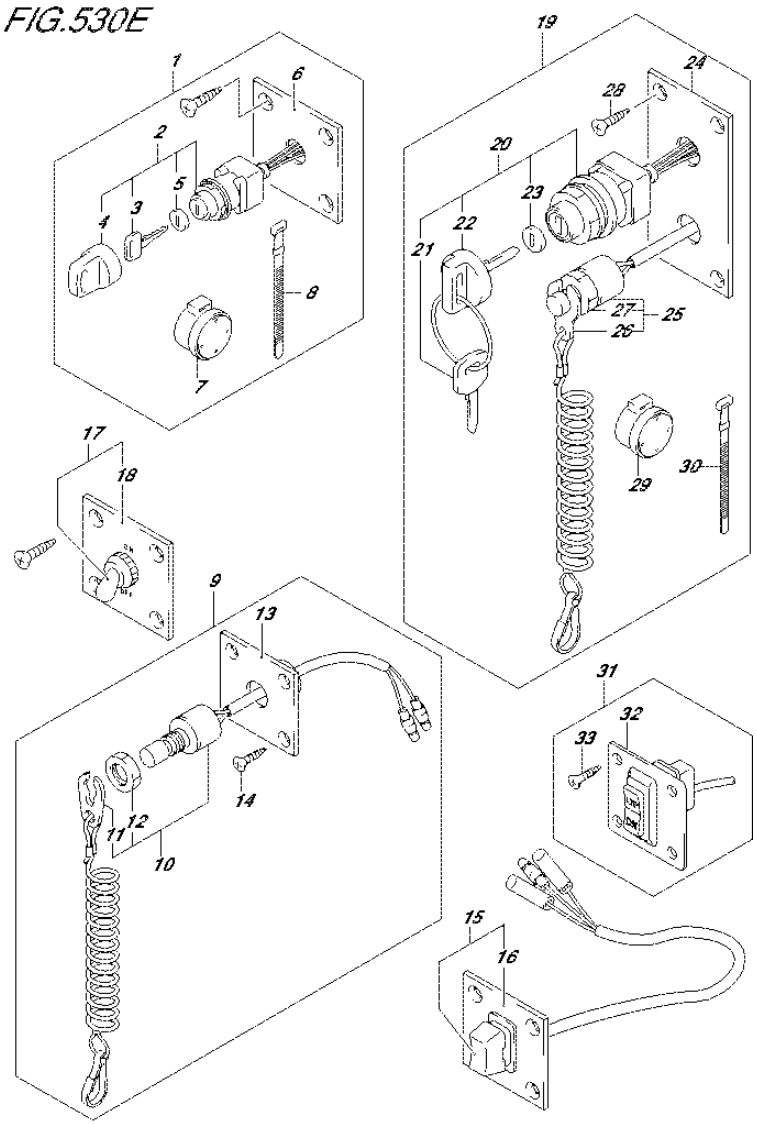

FIG.530E (5-B-13) OPT:SWITCH (DF60A E40)

REF NO.	PART NO.	DESCRIPTION	Q'TY	REMARKS
1	37100-96J00	PANEL ASSY, IGNITION SW	1	
2	37110-93J01	.SWITCH ASSY, IGNITION	1	
3-1	37141-99E00	..KEY (931)	2	
3-2	37141-99E10	..KEY (932)	2	
3-3	37141-99E20	..KEY (933)	2	
3-4	37141-99E30	..KEY (934)	2	
3-5	37141-99E40	..KEY (935)	2	
3-6	37141-99E50	..KEY (936)	2	
3-7	37141-99E60	..KEY (937)	2	
3-8	37141-99E70	..KEY (938)	2	
3-9	37141-99E80	..KEY (939)	2	
3-10	37141-99E90	..KEY (940)	2	
3-11	37141-99EA0	..KEY (941)	2	
3-12	37141-99EB0	..KEY (942)	2	
4	37143-99E00	..CAP, KEY	1	
5	37149-93J00	..CAP, CYLINDER BODY	1	
6	37139-99E00	.PANEL, IGNITION SW	1	
7	38500-93J90	.BUZZER ASSY, WARNING	1	
8	09407-08401	.CLAMP (L:80)	1	
9	37803-93J04	PANEL ASSY, EMERGENCY SW	1	
10	37820-93J04	.SWITCH ASSY, EMERGENCY	1	
11	37823-92E01	..PLATE, LOCK	1	
12	37826-92J00	..NUT	1	
13	37825-99E00	.PANEL, EMERGENCY SW	1	
14	03122-05165	.SCREW	4	
15	37805-93J00	PANEL ASSY, PTT SW	1	
16	37855-99E00	.PANEL, PTT SW	1	
17	37210-93J00	PANEL ASSY, LIGHTING SW	1	
18	37212-93J00	.PANEL, LIGHTING SW	1	
19	37100-96J24	PANEL ASSY, ENGINE SW	1	
20	37110-93J01	.SWITCH ASSY, IGNITION	1	
21-1	37141-99E00	..KEY (931)	2	
21-2	37141-99E10	..KEY (932)	2	
21-3	37141-99E20	..KEY (933)	2	
21-4	37141-99E30	..KEY (934)	2	
21-5	37141-99E40	..KEY (935)	2	

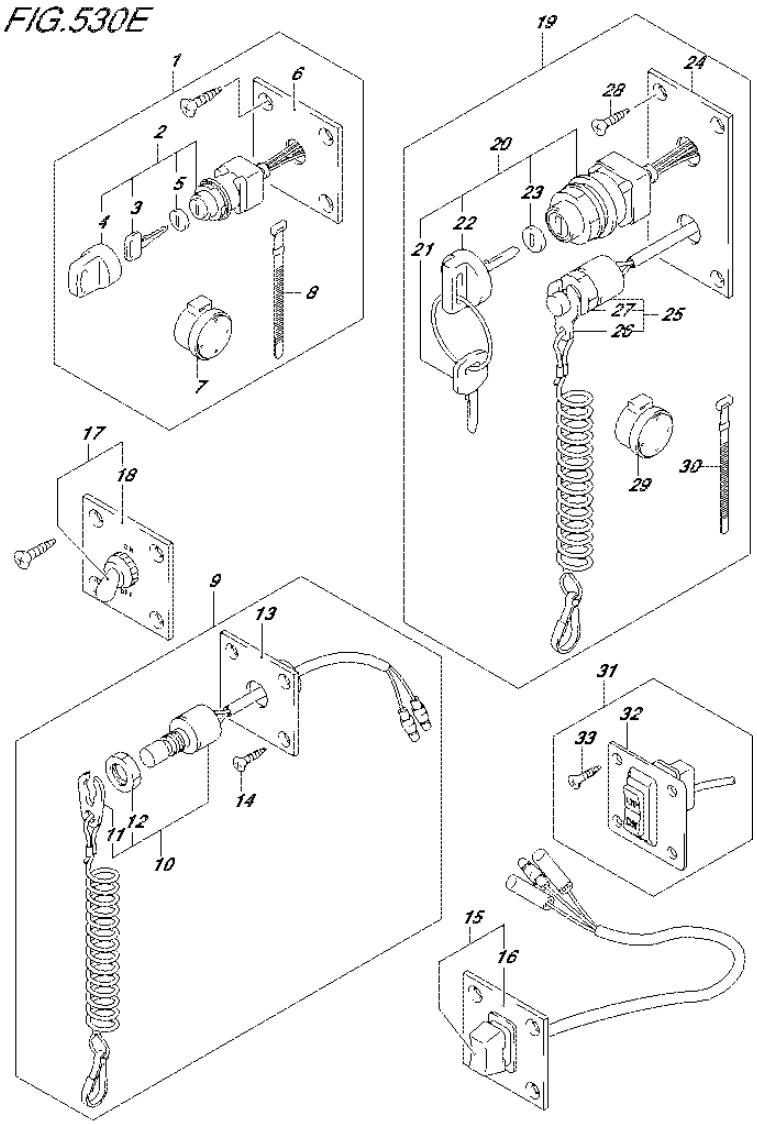

FIG.530E (5-B-14) OPT:SWITCH (DF60A E40)

REF NO.	PART NO.	DESCRIPTION	Q'TY	REMARKS
21-6	37141-99E50	..KEY (936)	2	
21-7	37141-99E60	..KEY (937)	2	
21-8	37141-99E70	..KEY (938)	2	
21-9	37141-99E80	..KEY (939)	2	
21-10	37141-99E90	..KEY (940)	2	
21-11	37141-99EA0	..KEY (941)	2	
21-12	37141-99EB0	..KEY (942)	2	
22	37143-99E00	..CAP, KEY	1	
23	37149-93J00	..CAP, CYLINDER BODY	1	
24	37139-99E20	.PANEL, IGNITION SWITCH	1	
25	37820-93J04	.SWITCH ASSY, EMERGENCY	1	
26	37823-92E01	..PLATE ASSY, EMERGENCY	1	
27	37826-92J00	..NUT	1	
28	03121-0516A	.SCREW	4	
29	38500-93J90	.BUZZER ASSY, WARNING	1	
30	09407-08401	.CLAMP (L:80)	1	
31	37860-87L00	PANEL ASSY, TROLLING CONTROL	1	
32	37862-87L00	.PANEL	1	
33	09131-05004	.SCREW (5X16)	4	

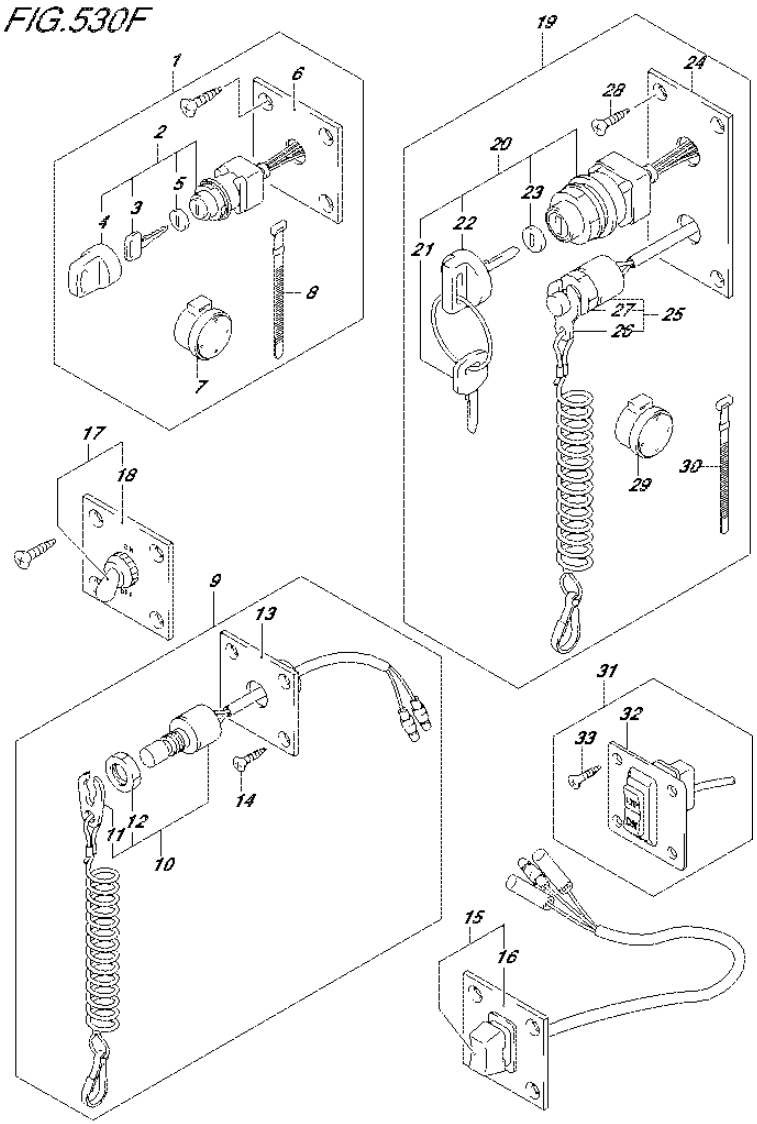

FIG.530F (5-B-15) OPT:SWITCH (DF50AVT E01)

REF NO.	PART NO.	DESCRIPTION	Q'TY	REMARKS
1	37100-96J00	PANEL ASSY, IGNITION SW	1	
2	37110-93J01	.SWITCH ASSY, IGNITION	1	
3-1	37141-99E00	..KEY (931)	2	
3-2	37141-99E10	..KEY (932)	2	
3-3	37141-99E20	..KEY (933)	2	
3-4	37141-99E30	..KEY (934)	2	
3-5	37141-99E40	..KEY (935)	2	
3-6	37141-99E50	..KEY (936)	2	
3-7	37141-99E60	..KEY (937)	2	
3-8	37141-99E70	..KEY (938)	2	
3-9	37141-99E80	..KEY (939)	2	
3-10	37141-99E90	..KEY (940)	2	
3-11	37141-99EA0	..KEY (941)	2	
3-12	37141-99EB0	..KEY (942)	2	
4	37143-99E00	..CAP, KEY	1	
5	37149-93J00	..CAP, CYLINDER BODY	1	
6	37139-99E00	.PANEL, IGNITION SW	1	
7	38500-93J90	.BUZZER ASSY, WARNING	1	
8	09407-08401	.CLAMP (L:80)	1	
9	37803-93J04	PANEL ASSY, EMERGENCY SW	1	
10	37820-93J04	.SWITCH ASSY, EMERGENCY	1	
11	37823-92E01	..PLATE, LOCK	1	
12	37826-92J00	..NUT	1	
13	37825-99E00	.PANEL, EMERGENCY SW	1	
14	03122-05165	.SCREW	4	
15	37805-93J00	PANEL ASSY, PTT SW	1	
16	37855-99E00	.PANEL, PTT SW	1	
17	37210-93J00	PANEL ASSY, LIGHTING SW	1	
18	37212-93J00	.PANEL, LIGHTING SW	1	
19	37100-96J24	PANEL ASSY, ENGINE SW	1	
20	37110-93J01	.SWITCH ASSY, IGNITION	1	
21-1	37141-99E00	..KEY (931)	2	
21-2	37141-99E10	..KEY (932)	2	
21-3	37141-99E20	..KEY (933)	2	
21-4	37141-99E30	..KEY (934)	2	
21-5	37141-99E40	..KEY (935)	2	

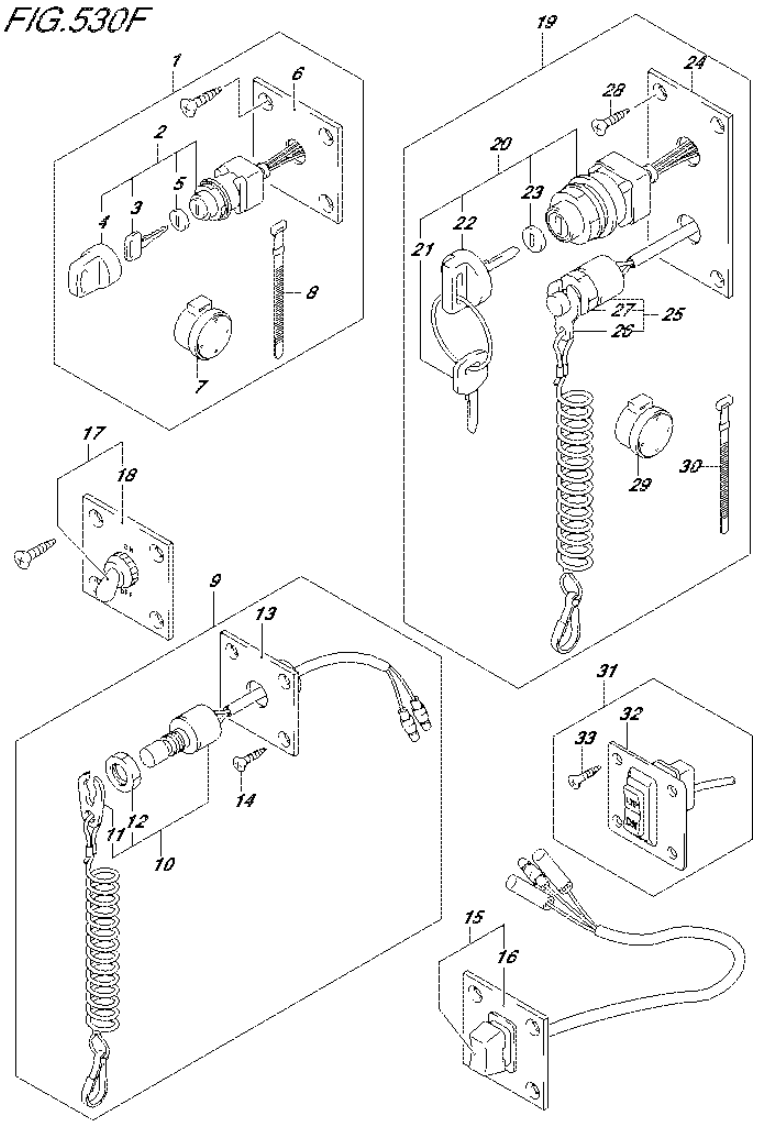

FIG.530F (5-C-2) OPT:SWITCH (DF50AVT E01)

REF NO.	PART NO.	DESCRIPTION	Q'TY	REMARKS
21-6	37141-99E50	..KEY (936)	2	
21-7	37141-99E60	..KEY (937)	2	
21-8	37141-99E70	..KEY (938)	2	
21-9	37141-99E80	..KEY (939)	2	
21-10	37141-99E90	..KEY (940)	2	
21-11	37141-99EA0	..KEY (941)	2	
21-12	37141-99EB0	..KEY (942)	2	
22	37143-99E00	..CAP, KEY	1	
23	37149-93J00	..CAP, CYLINDER BODY	1	
24	37139-99E20	.PANEL, IGNITION SWITCH	1	
25	37820-93J04	.SWITCH ASSY, EMERGENCY	1	
26	37823-92E01	..PLATE ASSY, EMERGENCY	1	
27	37826-92J00	..NUT	1	
28	03121-0516A	.SCREW	4	
29	38500-93J90	.BUZZER ASSY, WARNING	1	
30	09407-08401	.CLAMP (L:80)	1	
31	37860-87L00	PANEL ASSY, TROLLING CONTROL	1	
32	37862-87L00	.PANEL	1	
33	09131-05004	.SCREW (5X16)	4	

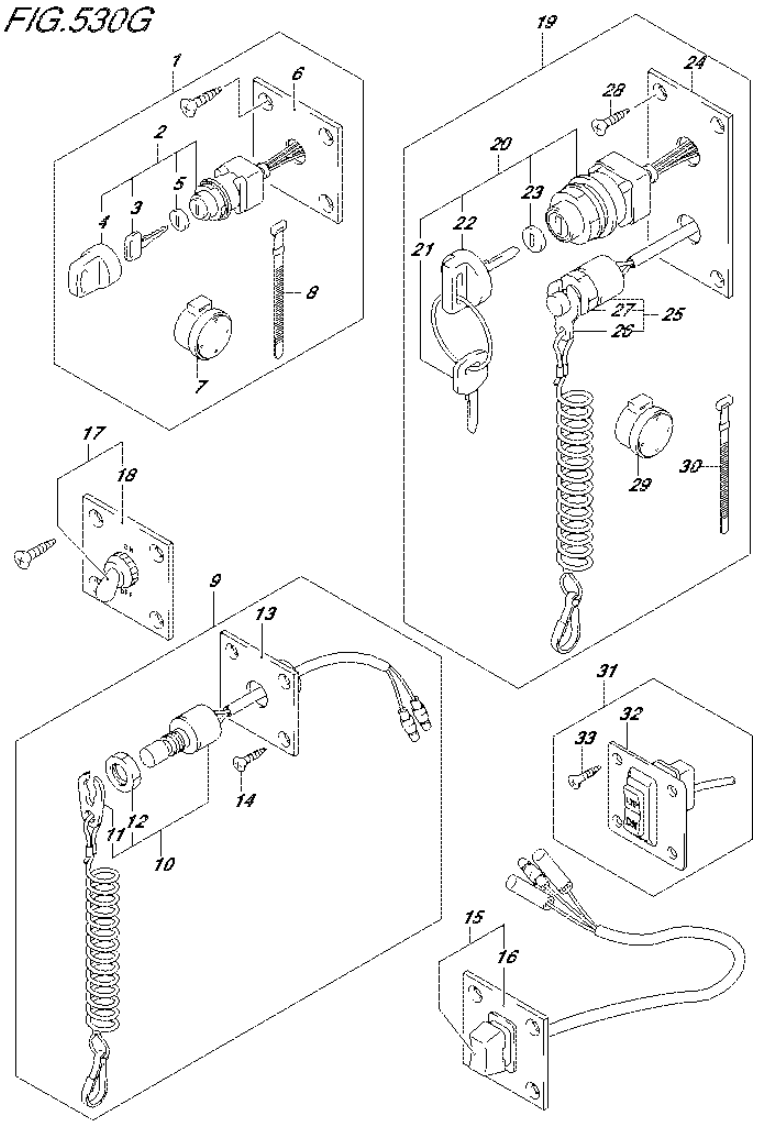

FIG.530G (5-C-3) OPT:SWITCH (DF60AVT E01)

REF NO.	PART NO.	DESCRIPTION	Q'TY	REMARKS
1	37100-96J00	PANEL ASSY, IGNITION SW	1	
2	37110-93J01	.SWITCH ASSY, IGNITION	1	
3-1	37141-99E00	..KEY (931)	2	
3-2	37141-99E10	..KEY (932)	2	
3-3	37141-99E20	..KEY (933)	2	
3-4	37141-99E30	..KEY (934)	2	
3-5	37141-99E40	..KEY (935)	2	
3-6	37141-99E50	..KEY (936)	2	
3-7	37141-99E60	..KEY (937)	2	
3-8	37141-99E70	..KEY (938)	2	
3-9	37141-99E80	..KEY (939)	2	
3-10	37141-99E90	..KEY (940)	2	
3-11	37141-99EA0	..KEY (941)	2	
3-12	37141-99EB0	..KEY (942)	2	
4	37143-99E00	..CAP, KEY	1	
5	37149-93J00	..CAP, CYLINDER BODY	1	
6	37139-99E00	.PANEL, IGNITION SW	1	
7	38500-93J90	.BUZZER ASSY, WARNING	1	
8	09407-08401	.CLAMP (L:80)	1	
9	37803-93J04	PANEL ASSY, EMERGENCY SW	1	
10	37820-93J04	.SWITCH ASSY, EMERGENCY	1	
11	37823-92E01	..PLATE, LOCK	1	
12	37826-92J00	..NUT	1	
13	37825-99E00	.PANEL, EMERGENCY SW	1	
14	03122-05165	.SCREW	4	
15	37805-93J00	PANEL ASSY, PTT SW	1	
16	37855-99E00	.PANEL, PTT SW	1	
17	37210-93J00	PANEL ASSY, LIGHTING SW	1	
18	37212-93J00	.PANEL, LIGHTING SW	1	
19	37100-96J24	PANEL ASSY, ENGINE SW	1	
20	37110-93J01	.SWITCH ASSY, IGNITION	1	
21-1	37141-99E00	..KEY (931)	2	
21-2	37141-99E10	..KEY (932)	2	
21-3	37141-99E20	..KEY (933)	2	
21-4	37141-99E30	..KEY (934)	2	
21-5	37141-99E40	..KEY (935)	2	

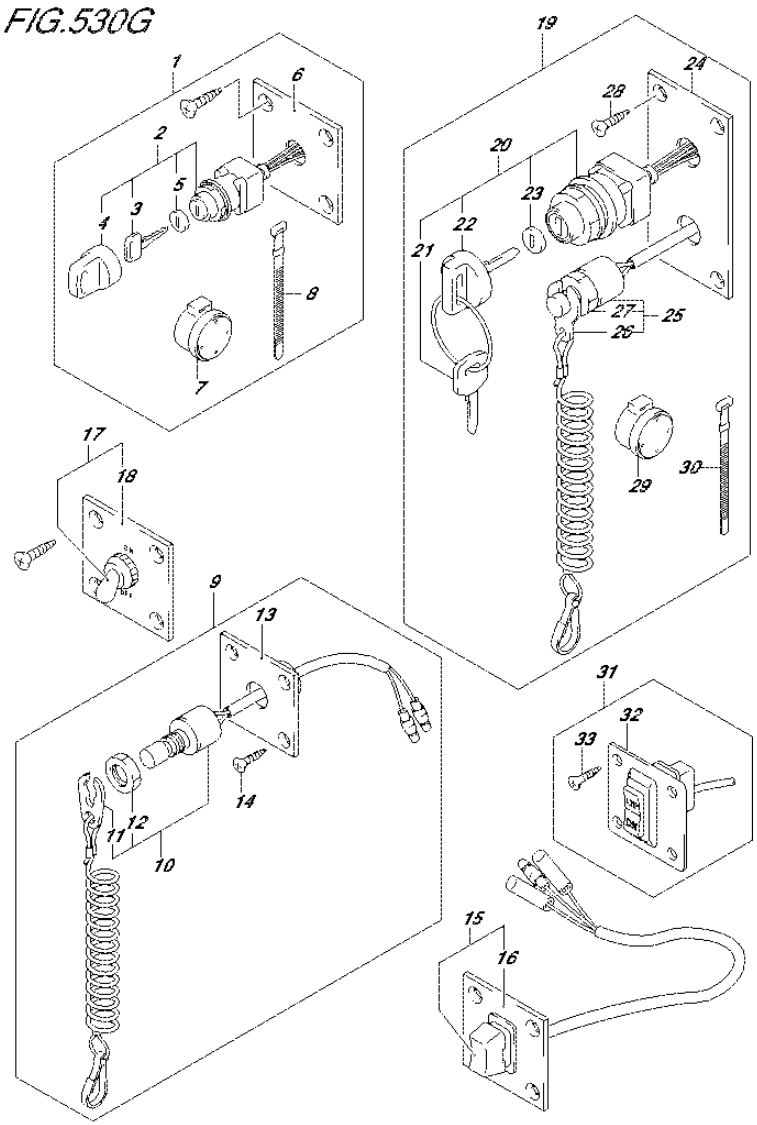

FIG.530G (5-C-4) OPT:SWITCH (DF60AVT E01)

REF NO.	PART NO.	DESCRIPTION	Q'TY	REMARKS
21-6	37141-99E50	..KEY (936)	2	
21-7	37141-99E60	..KEY (937)	2	
21-8	37141-99E70	..KEY (938)	2	
21-9	37141-99E80	..KEY (939)	2	
21-10	37141-99E90	..KEY (940)	2	
21-11	37141-99EA0	..KEY (941)	2	
21-12	37141-99EB0	..KEY (942)	2	
22	37143-99E00	..CAP, KEY	1	
23	37149-93J00	..CAP, CYLINDER BODY	1	
24	37139-99E20	.PANEL, IGNITION SWITCH	1	
25	37820-93J04	.SWITCH ASSY, EMERGENCY	1	
26	37823-92E01	..PLATE ASSY, EMERGENCY	1	
27	37826-92J00	..NUT	1	
28	03121-0516A	.SCREW	4	
29	38500-93J90	.BUZZER ASSY, WARNING	1	
30	09407-08401	.CLAMP (L:80)	1	
31	37860-87L00	PANEL ASSY, TROLLING CONTROL	1	
32	37862-87L00	.PANEL	1	
33	09131-05004	.SCREW (5X16)	4	

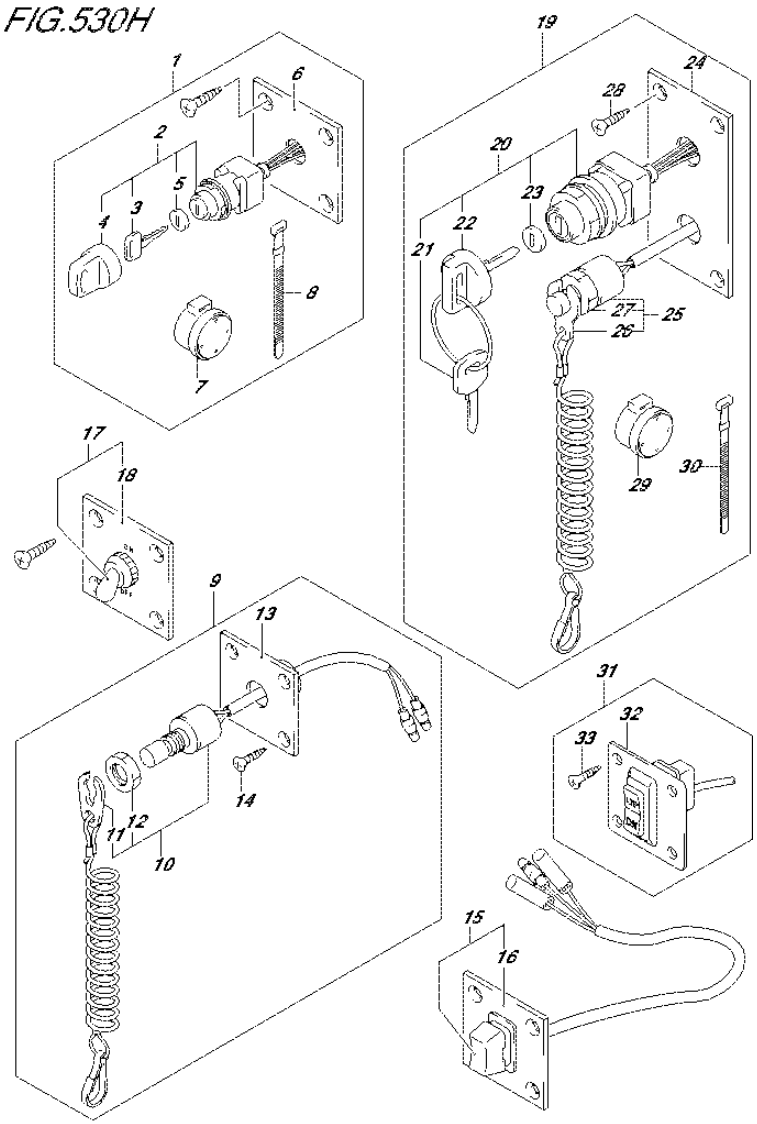

FIG.530H (5-C-5) OPT:SWITCH (DF60AVT E40)

REF NO.	PART NO.	DESCRIPTION	Q'TY	REMARKS
1	37100-96J00	PANEL ASSY, IGNITION SW	1	
2	37110-93J01	.SWITCH ASSY, IGNITION	1	
3-1	37141-99E00	..KEY (931)	2	
3-2	37141-99E10	..KEY (932)	2	
3-3	37141-99E20	..KEY (933)	2	
3-4	37141-99E30	..KEY (934)	2	
3-5	37141-99E40	..KEY (935)	2	
3-6	37141-99E50	..KEY (936)	2	
3-7	37141-99E60	..KEY (937)	2	
3-8	37141-99E70	..KEY (938)	2	
3-9	37141-99E80	..KEY (939)	2	
3-10	37141-99E90	..KEY (940)	2	
3-11	37141-99EA0	..KEY (941)	2	
3-12	37141-99EB0	..KEY (942)	2	
4	37143-99E00	..CAP, KEY	1	
5	37149-93J00	..CAP, CYLINDER BODY	1	
6	37139-99E00	.PANEL, IGNITION SW	1	
7	38500-93J90	.BUZZER ASSY, WARNING	1	
8	09407-08401	.CLAMP (L:80)	1	
9	37803-93J04	PANEL ASSY, EMERGENCY SW	1	
10	37820-93J04	.SWITCH ASSY, EMERGENCY	1	
11	37823-92E01	..PLATE, LOCK	1	
12	37826-92J00	..NUT	1	
13	37825-99E00	.PANEL, EMERGENCY SW	1	
14	03122-05165	.SCREW	4	
15	37805-93J00	PANEL ASSY, PTT SW	1	
16	37855-99E00	.PANEL, PTT SW	1	
17	37210-93J00	PANEL ASSY, LIGHTING SW	1	
18	37212-93J00	.PANEL, LIGHTING SW	1	
19	37100-96J24	PANEL ASSY, ENGINE SW	1	
20	37110-93J01	.SWITCH ASSY, IGNITION	1	
21-1	37141-99E00	..KEY (931)	2	
21-2	37141-99E10	..KEY (932)	2	
21-3	37141-99E20	..KEY (933)	2	
21-4	37141-99E30	..KEY (934)	2	
21-5	37141-99E40	..KEY (935)	2	

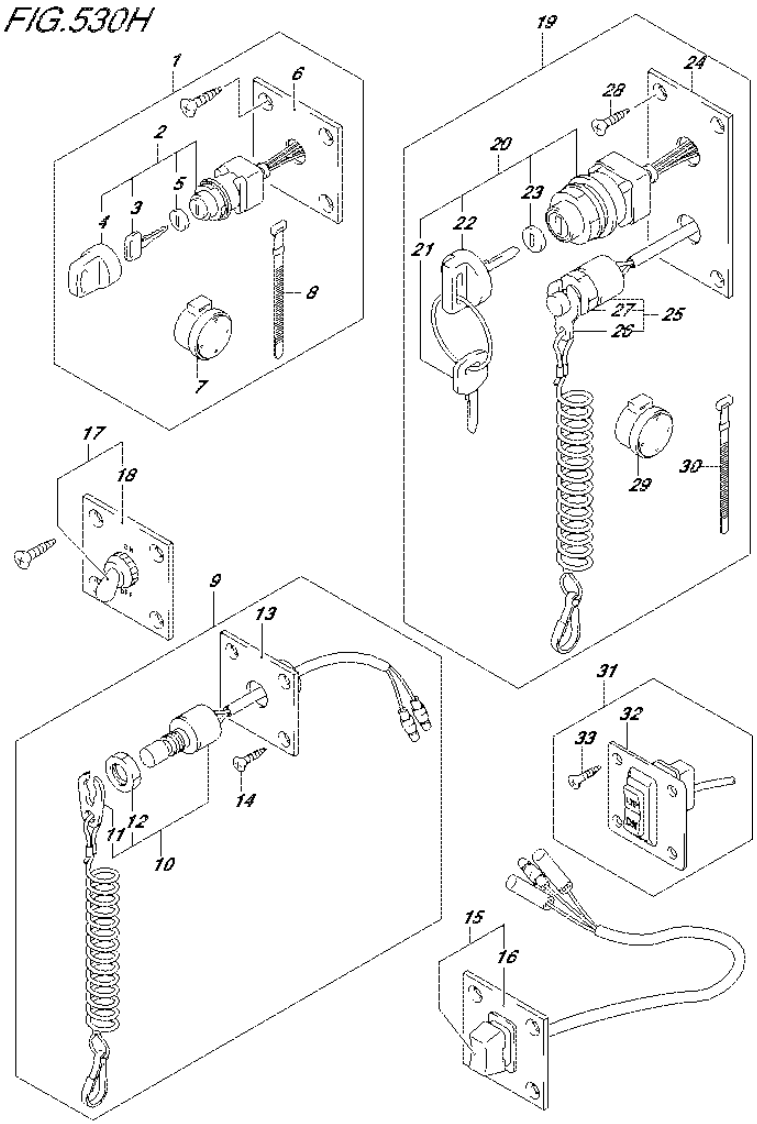

FIG.530H (5-C-6) OPT:SWITCH (DF60AVT E40)

REF NO.	PART NO.	DESCRIPTION	Q'TY	REMARKS
21-6	37141-99E50	..KEY (936)	2	
21-7	37141-99E60	..KEY (937)	2	
21-8	37141-99E70	..KEY (938)	2	
21-9	37141-99E80	..KEY (939)	2	
21-10	37141-99E90	..KEY (940)	2	
21-11	37141-99EA0	..KEY (941)	2	
21-12	37141-99EB0	..KEY (942)	2	
22	37143-99E00	..CAP, KEY	1	
23	37149-93J00	..CAP, CYLINDER BODY	1	
24	37139-99E20	.PANEL, IGNITION SWITCH	1	
25	37820-93J04	.SWITCH ASSY, EMERGENCY	1	
26	37823-92E01	..PLATE ASSY, EMERGENCY	1	
27	37826-92J00	..NUT	1	
28	03121-0516A	.SCREW	4	
29	38500-93J90	.BUZZER ASSY, WARNING	1	
30	09407-08401	.CLAMP (L:80)	1	
31	37860-87L00	PANEL ASSY, TROLLING CONTROL	1	
32	37862-87L00	.PANEL	1	
33	09131-05004	.SCREW (5X16)	4	

FIG.544A

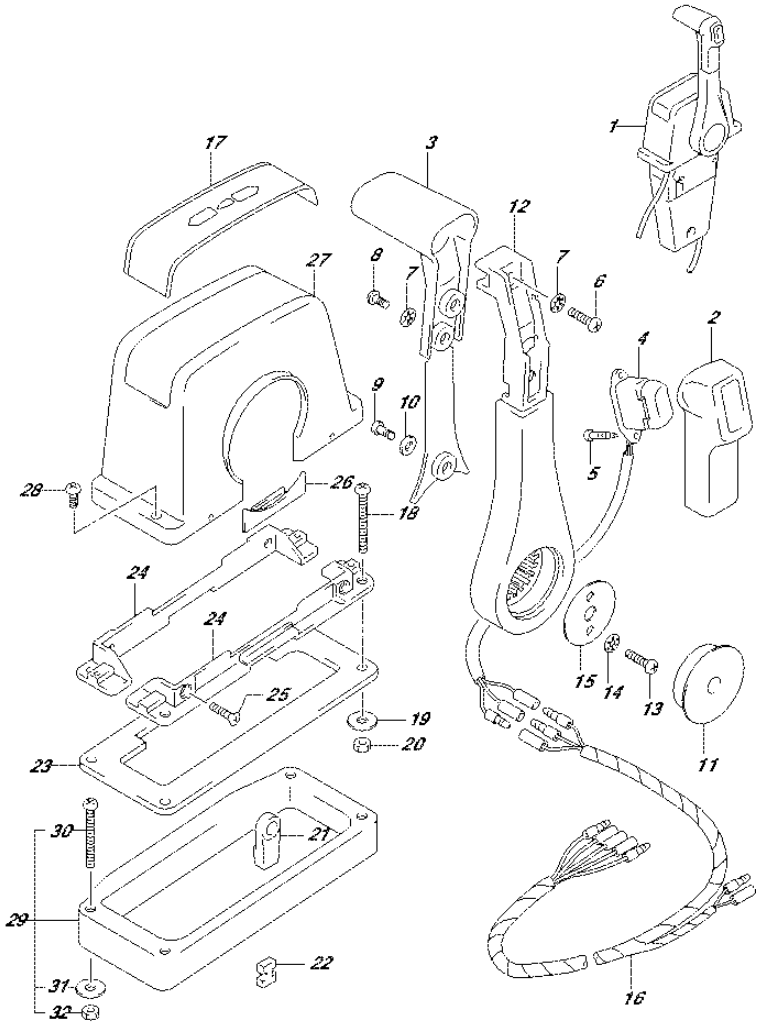

FIG.544A (5-C-7) OPT:REMOTE CONTROL ASSY SINGLE (1)

REF NO.	PART NO.	DESCRIPTION	Q'TY	REMARKS
1	67200-93J13	REMOTE CONTROL ASSY	1	PUSH
2	67261-93J00	.GRIP, NO.1	1	
3	67263-93J00	.GRIP, NO.2	1	
4	37850-93J10	.SWITCH ASSY, PTT	1	
5	67295-92E10	.SCREW	2	
6	67296-88D10	.SCREW	1	
7	67288-92E20	.WASHER	3	
8	67295-92E00	.SCREW	2	
9	67296-92E70	.SCREW	1	
10	67288-92E40	.WASHER	1	
11	67257-92E00	.CAP, LEVER	1	
12	67251-93J00	.LEVER, HANDLE	1	
13	67296-92E60	.SCREW	2	
14	67288-92E30	.WASHER	2	
15	67253-92E00	.WASHER	1	
16	36890-93J00	.WIRE HARNESS	1	
17	67281-93J00	.DECAL	1	
18	67296-92E30	.SCREW	4	
19	09160-05024	.WASHER (5.5X16X1.5)	4	
20	67287-92E00	.NUT	4	
21	67275-95600	.END, CABLE	2	
22	67273-95600	.SPACER	1	
23	67273-92E00	.GROMMET	1	
24	67274-92E00	.FLANGE	2	
25	67296-95610	.SCREW	4	
26	67271-92E00	.COVER	1	
27	67211-93J00	.COVER	1	
28	67296-92E70	.SCREW	2	
29	67500-93J00	KIT, REMOCON SPACER SINGLE	1	
30	09125-05135	.SCREW (5X65)	4	
31	09160-05029	.WASHER (5.5X12X0.8)	4	
32	09140-05005	.NUT	4	

FIG.545A

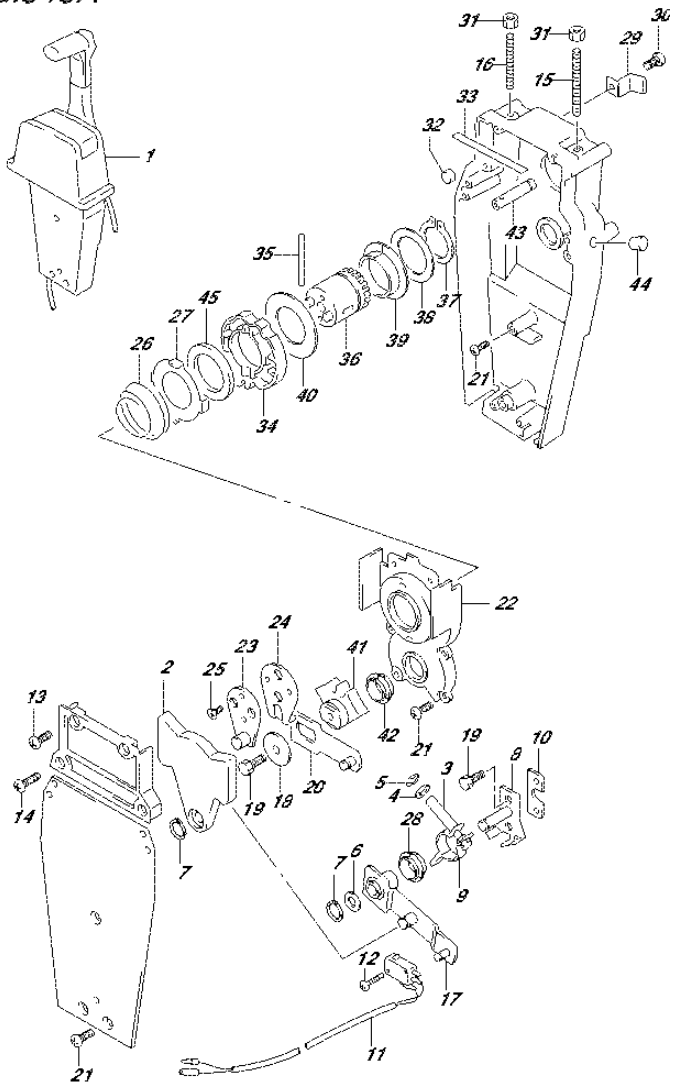

FIG.545A (5-C-8) OPT:REMOTE CONTROL ASSY SINGLE (2)

REF NO.	PART NO.	DESCRIPTION	Q'TY	REMARKS
1	67200-93J13	REMOTE CONTROL ASSY	1	PUSH
2	67222-92E00	.DUAL PLATE	1	
3	67223-92E00	.BRAKE ADJUST	1	
4	67288-92E00	.WASHER	1	
5	67292-94300	.E RING	4	
6	67288-92E10	.WASHER	1	
7	67291-92E00	.SNAP RING	2	
8	67221-92E00	.SHIFT ASSY	1	
9	67224-92E00	.BRAKE ARM ASSY	1	
10	67294-92E00	.SPACER	1	
11	37721-95500	.SWITCH ASSY, NEUTRAL	1	
12	67296-92E11	.SCREW (3X15)	2	
13	67296-88D10	.SCREW (5X16)	2	
14	67296-92E20	.SCREW (5X25)	2	
15	67226-92E00	.BOLT, STOPPER FRONT	1	
16	67226-92E10	.BOLT, STOPPER REAR	1	
17	67240-92E00	.ARM ASSY, THROTTLE	1	
18	67228-92E00	.WASHER	1	
19	67286-92E00	.BOLT (6X18)	3	
20	67230-92E00	.SHIFT ARM ASSY	1	
21	09125-05042	.SCREW (5X10)	9	
22	67234-92E00	.CASE, GEAR	1	
23	67245-92E00	.LEVER ASSY, THROTTLE	1	
24	67227-92E00	.STOPPER	1	
25	09126-06006	.SCREW (6X20)	2	
26	67233-92E00	.SPRING	1	
27	67235-92E00	.PLATE, SHIFT LOCK	1	
28	67232-95620	.BUSH	1	
29	67269-92E00	.BRACKET	1	
30	67296-88D10	.SCREW	1	
31	09140-06020	.NUT	2	
32	67236-92E00	.ROLLER	1	
33	67237-92E01	.SPRING	6	
34	67238-92E00	.GEAR, DRIVE	1	

FIG.545A

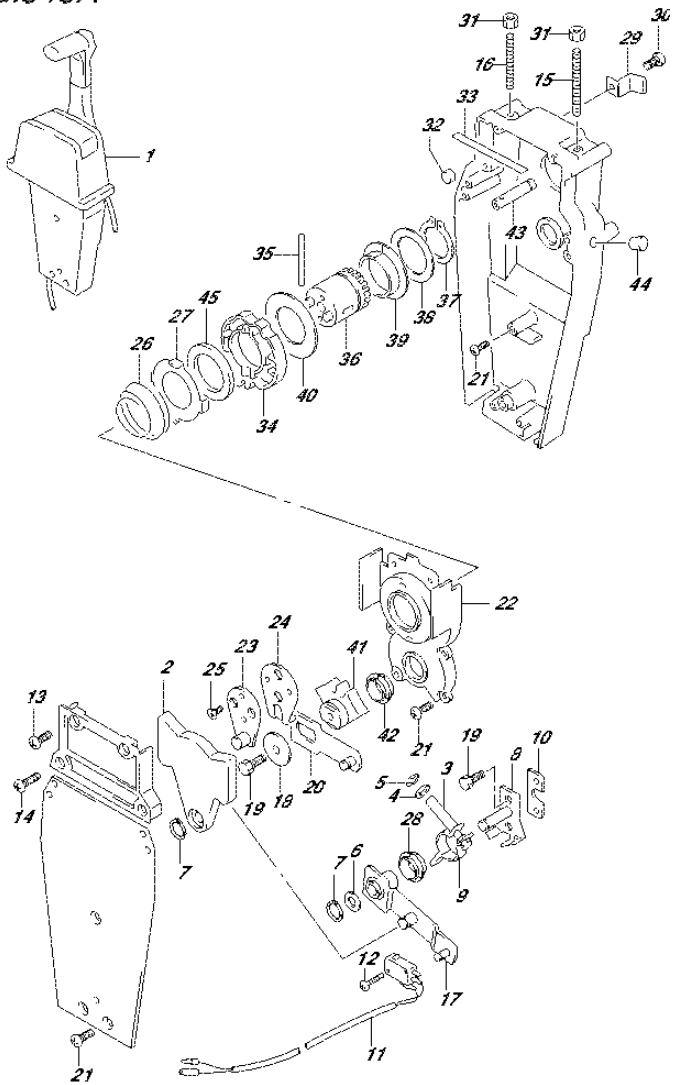

DF60A_E01_016_545A
OPT:REMOTE CONTROL ASSY SINGLE (2)

FIG.545A (5-C-9) OPT:REMOTE CONTROL ASSY SINGLE (2)

REF NO.	PART NO.	DESCRIPTION	Q'TY	REMARKS
35	67239-92E00	.PIN	1	
36	67246-92E00	.SHIFT, DRIVE	1	
37	67291-92E10	.SNAP RING	1	
38	67253-92E10	.WASHER	1	
39	67252-92E10	.BUSH	1	
40	67253-95600	.WASHER	1	
41	67231-92E00	.GEAR, SHIFT	1	
42	67232-95600	.BUSH	1	
43	67241-92E10	.ROD, FREE ACC	1	
44	67243-92E00	.CAP, HOLE	1	
45	67239-92E10	.PLATE, SHIFT PIN	1	

FIG.570A

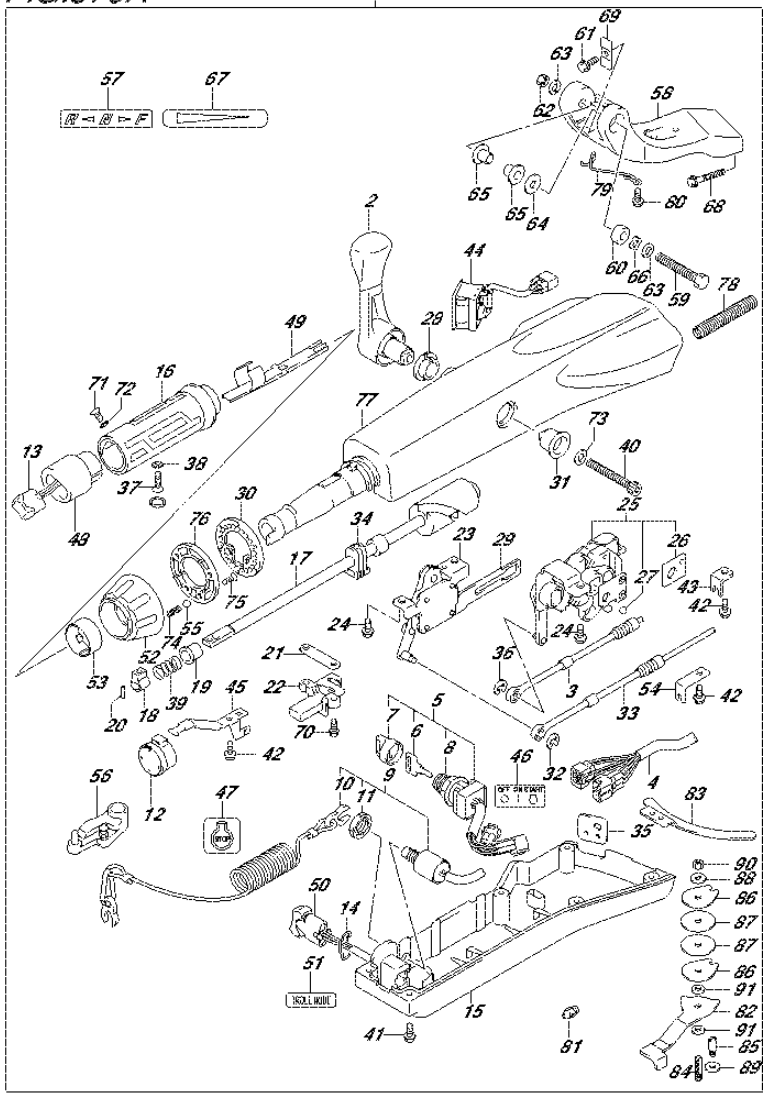

FIG.570A (5-C-10) OPT:TILLER HANDLE (DF40A E01)

REF NO.	PART NO.	DESCRIPTION	Q'TY	REMARKS
1	63002-88L21-0EP	KIT TILLER HANDLE (BLACK)	1	
2	21110-88L00	.LEVER, SHIFT	1	
3	23230-88L00	.CABLE, SHIFT	1	
4	36620-88L10	.WIRE ASSY, HANDLE	1	
5	37110-87L01	.SWITCH ASSY, IGNITION	1	
6-1	37141-99E00	..KEY (931)	1	
6-2	37141-99E10	..KEY (932)	1	
6-3	37141-99E20	..KEY (933)	1	
6-4	37141-99E30	..KEY (934)	1	
6-5	37141-99E40	..KEY (935)	1	
6-6	37141-99E50	..KEY (936)	1	
6-7	37141-99E60	..KEY (937)	1	
6-8	37141-99E70	..KEY (938)	1	
6-9	37141-99E80	..KEY (939)	1	
6-10	37141-99E90	..KEY (940)	1	
6-11	37141-99EA0	..KEY (941)	1	
6-12	37141-99EB0	..KEY (942)	1	
7	37143-99E00	..CAP, KEY	1	
8	37149-93J00	..CAP, CYLINDER BODY	1	
9	37820-87L01	.SWITCH ASSY, EMERGENCY	1	
10	37823-92E01	..PLATE, LOCK	1	
11	37826-92J00	..NUT	1	
12	38500-93J90	.BUZZER	1	
13	37850-87L00	.SWITCH ASSY, PTT	1	
14	37852-87J00	.PLATE, TRIM SWITCH	1	
15	63121-88L00	.COVER, UNDER	1	
16	63210-88L00	.GRIP, HANDLE	1	
17	63221-88L00	.SHAFT, THROTTLE	1	
18	63223-92D00	.STOPPER, HANDLE ROD	1	
19	63225-88L00	.BUSH, HANDLE ROD	1	
20	63227-93200	.PIN, HANDLE ROD	1	
21	63235-88L00	.PLATE, THROTTLE SHAFT	1	
22	63246-88L00	.STOPPER THROTTLE ADJ	1	
23	63250-88L00	.ARM ASSY, THROTTLE	1	

FIG.570A

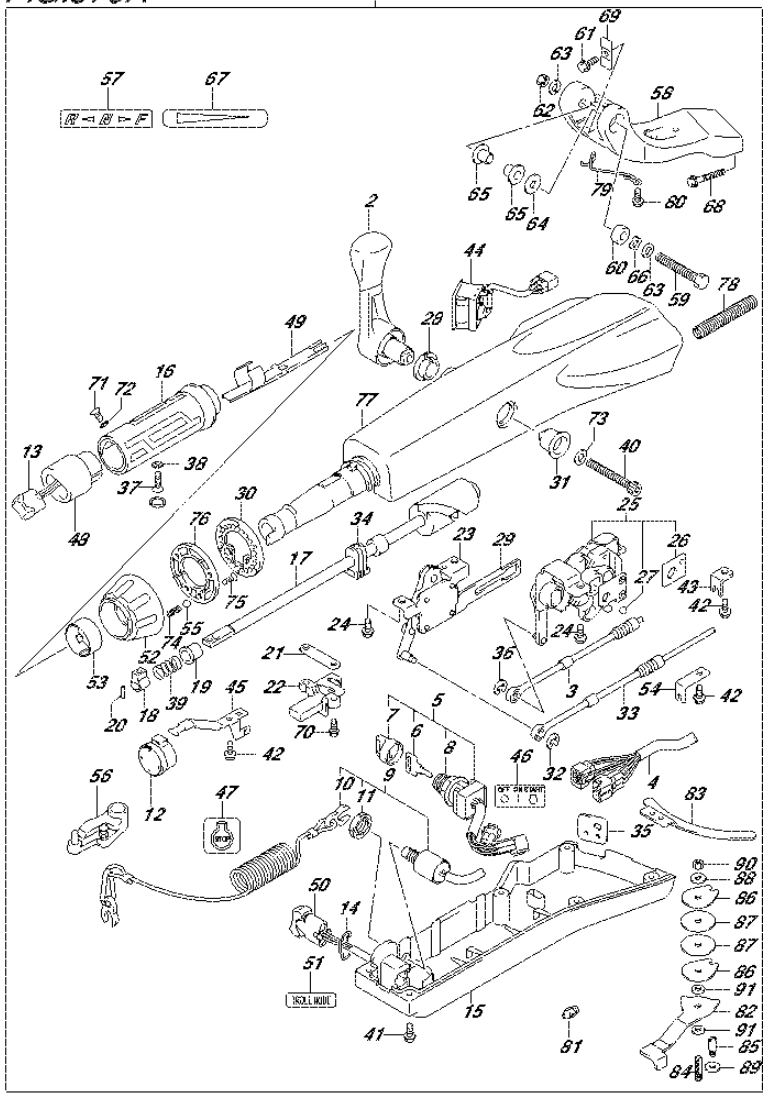

FIG.570A (5-C-11) OPT:TILLER HANDLE (DF40A E01)

REF NO.	PART NO.	DESCRIPTION	Q'TY	REMARKS
24	63251-87J00	.BOLT, SHIFT GEAR ASSY	4	
25	63260-88L00	.GEAR ASSY, SHIFT	1	
26	63272-87J00	..PLATE, BALL GUIDE	1	
27	63273-87J00	..BALL	1	
28	63262-87J00	.BUSH, SHIFT LEVER	1	
29	63271-87J00	.PLATE, LOCK	1	
30	63248-99J00	.PLATE, THROTTLE ADJ NOTCH	1	
31	63261-87J00	.BUSH, SHIFT GEAR	1	
32	63274-87J00	.E RING	1	
33	63610-88L00	.CABLE, THROTTLE	1	
34	37853-88L90	.GROMMET, PTT SWITCH LEAD	1	
35	63626-88L00	.GROMMET, WIRE HARNESS	1	
36	67292-87J00	.E RING	2	
37	09126-06015	.SCREW (6X23)	1	
38	09163-06001	.LOCK WASHER	1	
39	09440-12027	.SPRING	1	
40	21112-88L00	.BOLT SHIFT LEVER	1	
41	09125-05047	.SCREW (5X14)	6	
42	63611-88L00	.BOLT CLAMP BRACKET	3	
43	63612-87J00	.BRACKET, CLAMP	1	
44	34200-87L00	.TACHOMETER ASSY, WITH MONITOR	1	
45	36617-88L90	.CLAMP PLATE, MAIN HARNESS	1	
46	37112-88L90	.LABEL, IGNITION SWITCH	1	
47	37835-95D00	.LABEL, STOP	1	
48	37851-88L90	.BASE, PTT SWITCH	1	
49	37852-88L90	.HARNESS, GUIDE	1	
50	37861-87L10	.SWITCH, TROLLING CONTROL	1	
51	37864-88L90	.LABEL, TROLL MODE	1	
52	63244-99J00	.KNOB, THROTTLE ADJ	1	
53	63245-99J00	.BUSH, THROTTLE ADJ	1	
54	63612-88L10	.BRACKET, CLAMP SHIFT	1	
55	09260-10006	.BALL	1	
56	19120-88L11	.LEVER, THROTTLE	1	
57	21131-88L00	.MARK, CLUTCH SHIFT	1	

FIG.570A

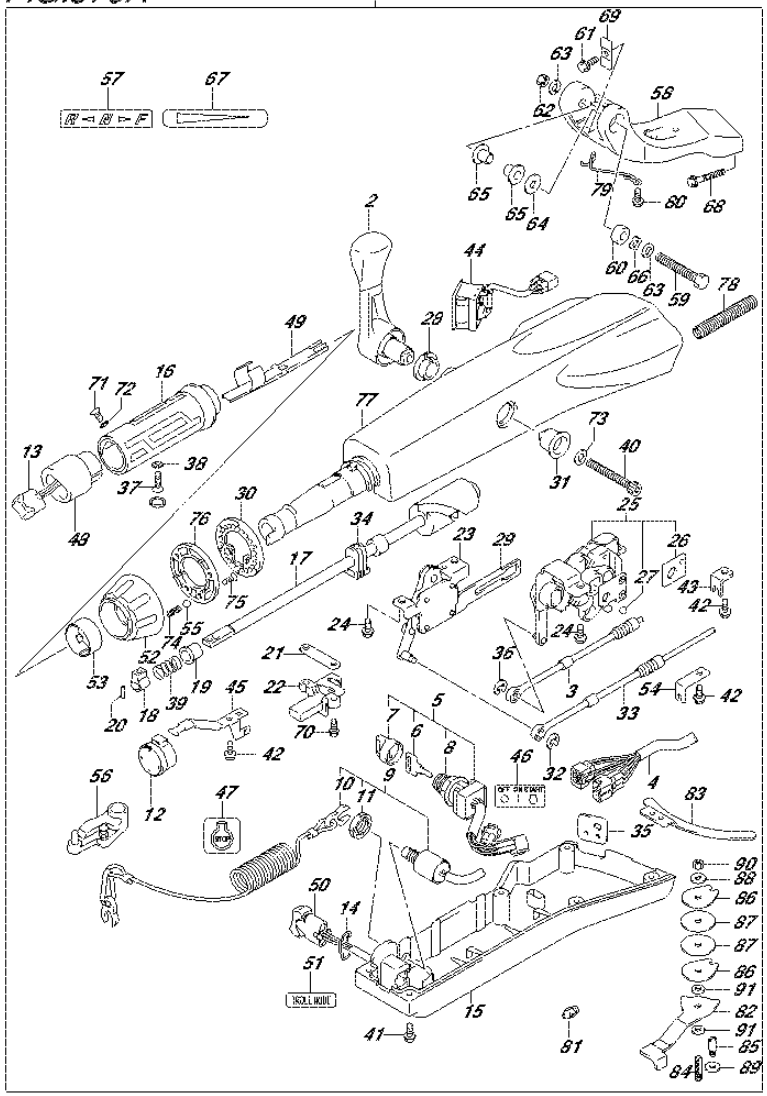

FIG.570A (5-C-12) OPT:TILLER HANDLE (DF40A E01)

REF NO.	PART NO.	DESCRIPTION	Q'TY	REMARKS
58	43761-88L01-0EP	.BRACKET, TILLER HANDLE (BLACK)	1	
59	43762-88L00	.BOLT TILLER HANDLE PIVOT	1	
60	43768-88L00	.SPACER, TILLER HANDLE	1	
61	09116-08137	.BOLT (8X22)	1	
62	09159-12014	.NUT	1	
63	09160-12066	.WASHER (12.5X22X2.5)	2	
64	09160-12124	.WASHER (12.5X32X1.5)	1	
65	63115-88L00	.BUSH, TILLER HANDLE	2	
66	09164-13010	.WASHER	1	
67	63215-93110	.MARK, HANDLE GRIP	1	
68	09116-10150	.BOLT (10X55)	2	
69	63132-88L00	.STOPPER, TILLER HANDLE	1	
70	63251-88L90	.BOLT	2	
71	37855-88L90	.SCREW, THROTTLE GRIP	1	
72	37854-88L90	.WASHER,THROTTLE GRIP	1	
73	63258-88L00	.WASHER	1	
74	09440-06037	.SPRING	1	
75	03522-05169	.SCREW	3	
76	63247-99J00	.PLATE, THROTTLE ADJ KNOB	1	
77	63111-88L00-0EP	.HOUSING, TILLER HANDLE (BLACK)	1	
78	33834-88L00	.TUBE, CABLE PROTECTOR	1	
79	65793-88L00	.HOLDER, FUEL HOSE	1	
80	09116-06237	.BOLT (6X15)	2	
81	22511-99011	.NIPPLE, GREASE	1	
82	43411-88L00	.ADJUSTER, STEERING	1	
83	43415-88L00	.PLATE, STEERING ADJUSTER	1	
84	43512-88L00	.SHAFT, STEERING ADJ THREAD	1	
85	43513-88L00	.BOLT, STEERING ADJUSTER	1	
86	43514-88L00	.PLATE, STEERING ADJ FRICTION	2	
87	43515-88L00	.WASHER, STRG ADJ FRICTION PLATE	2	
88	43516-88L00	.WASHER, STRG ADJ FRICTION	1	
89	43517-88L00	.SPACER, STEERING ADJUSTER	1	

FIG.570A

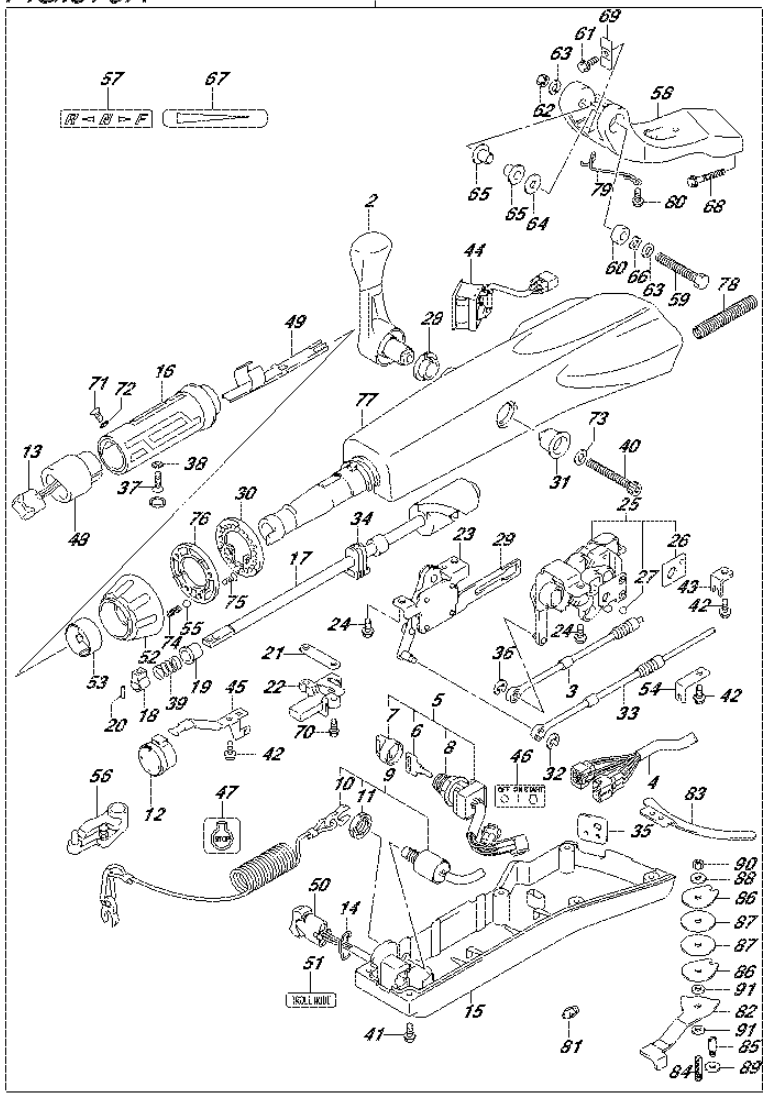

FIG.570A (5-C-13) OPT:TILLER HANDLE (DF40A E01)

REF NO.	PART NO.	DESCRIPTION	Q'TY	REMARKS
90	09159-08059	.NUT	1	
91	09161-08011	.WASHER (8.2X18X1.2)	2	

FIG.570B

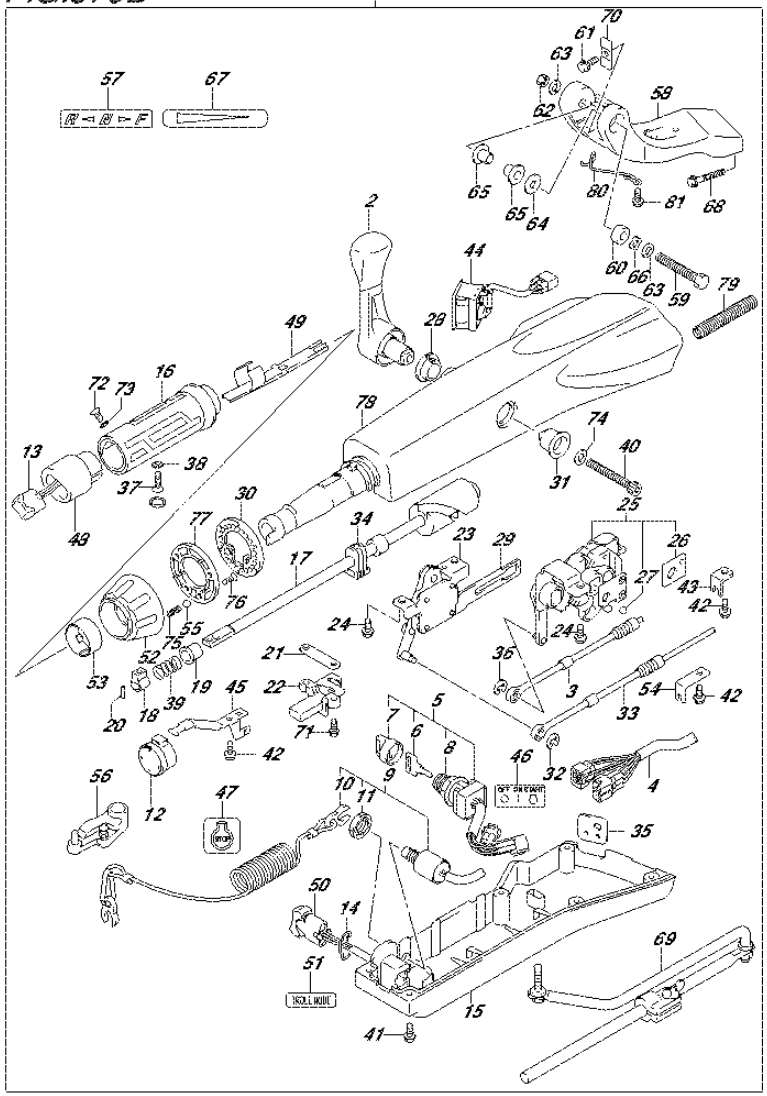

FIG.570B (5-C-14) OPT:TILLER HANDLE (DF40AST E34)

REF NO.	PART NO.	DESCRIPTION	Q'TY	REMARKS
1	63002-88L11-0EP	KIT TILLER HANDLE (BLACK)	1	
2	21110-88L00	.LEVER, SHIFT	1	
3	23230-88L00	.CABLE, SHIFT	1	
4	36620-88L10	.WIRE ASSY, HANDLE	1	
5	37110-87L01	.SWITCH ASSY, IGNITION	1	
6-1	37141-99E00	..KEY (931)	1	
6-2	37141-99E10	..KEY (932)	1	
6-3	37141-99E20	..KEY (933)	1	
6-4	37141-99E30	..KEY (934)	1	
6-5	37141-99E40	..KEY (935)	1	
6-6	37141-99E50	..KEY (936)	1	
6-7	37141-99E60	..KEY (937)	1	
6-8	37141-99E70	..KEY (938)	1	
6-9	37141-99E80	..KEY (939)	1	
6-10	37141-99E90	..KEY (940)	1	
6-11	37141-99EA0	..KEY (941)	1	
6-12	37141-99EB0	..KEY (942)	1	
7	37143-99E00	..CAP, KEY	1	
8	37149-93J00	..CAP, CYLINDER BODY	1	
9	37820-87L01	.SWITCH ASSY, EMERGENCY	1	
10	37823-92E01	..PLATE, LOCK	1	
11	37826-92J00	..NUT	1	
12	38500-93J90	.BUZZER	1	
13	37850-87L00	.SWITCH ASSY, PTT	1	
14	37852-87J00	.PLATE, TRIM SWITCH	1	
15	63121-88L00	.COVER, UNDER	1	
16	63210-88L00	.GRIP, HANDLE	1	
17	63221-88L00	.SHAFT, THROTTLE	1	
18	63223-92D00	.STOPPER, HANDLE ROD	1	
19	63225-88L00	.BUSH, HANDLE ROD	1	
20	63227-93200	.PIN, HANDLE ROD	1	
21	63235-88L00	.PLATE, THROTTLE SHAFT	1	
22	63246-88L00	.STOPPER THROTTLE ADJ	1	
23	63250-88L00	.ARM ASSY, THROTTLE	1	

FIG.570B

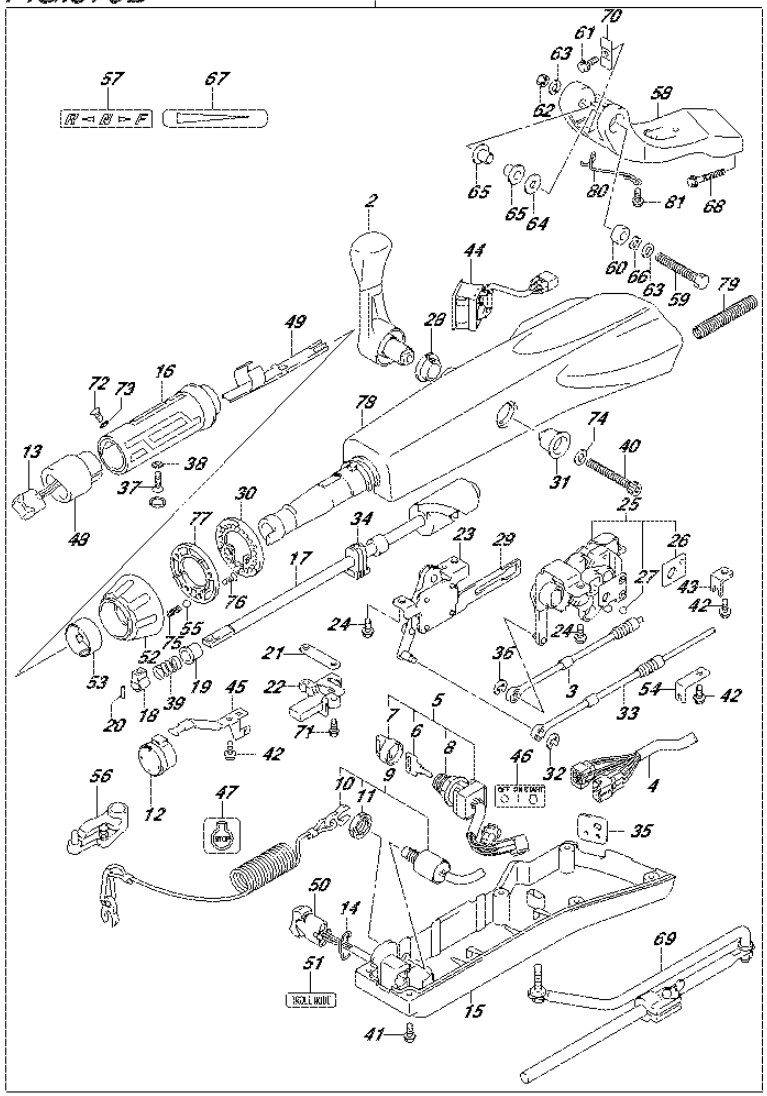

FIG.570B (5-C-15) OPT:TILLER HANDLE (DF40AST E34)

REF NO.	PART NO.	DESCRIPTION	Q'TY	REMARKS
24	63251-87J00	.BOLT, SHIFT GEAR ASSY	4	
25	63260-88L00	.GEAR ASSY, SHIFT	1	
26	63272-87J00	..PLATE, BALL GUIDE	1	
27	63273-87J00	..BALL	1	
28	63262-87J00	.BUSH, SHIFT LEVER	1	
29	63271-87J00	.PLATE, LOCK	1	
30	63248-99J00	.PLATE, THROTTLE ADJ NOTCH	1	
31	63261-87J00	.BUSH, SHIFT GEAR	1	
32	63274-87J00	.E RING	1	
33	63610-88L00	.CABLE, THROTTLE	1	
34	37853-88L90	.GROMMET, PTT SWITCH LEAD	1	
35	63626-88L00	.GROMMET, WIRE HARNESS	1	
36	67292-87J00	.E RING	2	
37	09126-06015	.SCREW (6X23)	1	
38	09163-06001	.LOCK WASHER	1	
39	09440-12027	.SPRING	1	
40	21112-88L00	.BOLT SHIFT LEVER	1	
41	09125-05047	.SCREW (5X14)	6	
42	63611-88L00	.BOLT CLAMP BRACKET	3	
43	63612-87J00	.BRACKET, CLAMP	1	
44	34200-87L00	.TACHOMETER ASSY, WITH MONITOR	1	
45	36617-88L90	.CLAMP PLATE, MAIN HARNESS	1	
46	37112-88L90	.LABEL, IGNITION SWITCH	1	
47	37835-95D00	.LABEL, STOP	1	
48	37851-88L90	.BASE, PTT SWITCH	1	
49	37852-88L90	.HARNESS, GUIDE	1	
50	37861-87L10	.SWITCH, TROLLING CONTROL	1	
51	37864-88L90	.LABEL, TROLL MODE	1	
52	63244-99J00	.KNOB, THROTTLE ADJ	1	
53	63245-99J00	.BUSH, THROTTLE ADJ	1	
54	63612-88L10	.BRACKET, CLAMP SHIFT	1	
55	09260-10006	.BALL	1	
56	19120-88L11	.LEVER, THROTTLE	1	
57	21131-88L00	.MARK, CLUTCH SHIFT	1	

FIG.570B

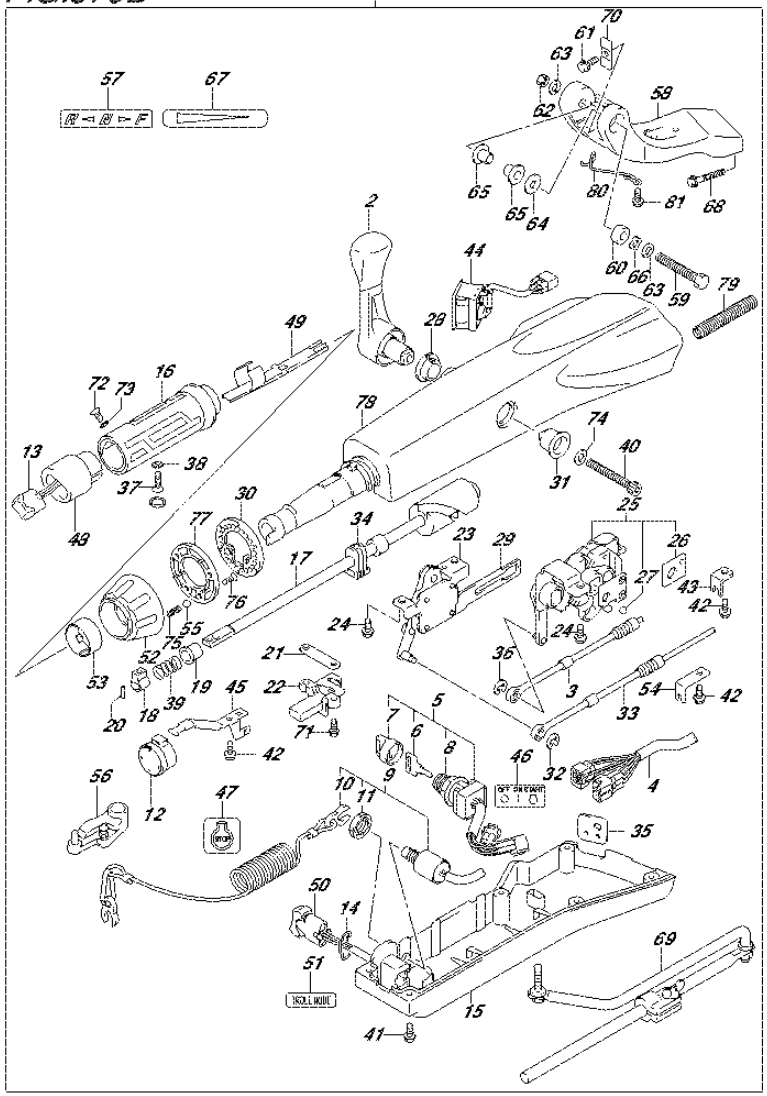

FIG.570B (5-D-2) OPT:TILLER HANDLE (DF40AST E34)

REF NO.	PART NO.	DESCRIPTION	Q'TY	REMARKS
58	43761-88L01-0EP	.BRACKET, TILLER HANDLE (BLACK)	1	
59	43762-88L00	.BOLT TILLER HANDLE PIVOT	1	
60	43768-88L00	.SPACER, TILLER HANDLE	1	
61	09116-08137	.BOLT (8X22)	1	
62	09159-12014	.NUT	1	
63	09160-12066	.WASHER (12.5X22X2.5)	2	
64	09160-12124	.WASHER (12.5X32X1.5)	1	
65	63115-88L00	.BUSH, TILLER HANDLE	2	
66	09164-13010	.WASHER	1	
67	63215-93110	.MARK, HANDLE GRIP	1	
68	09116-10150	.BOLT (10X55)	2	
69	43770-99E03	.ADJUSTER ASSY, STEERING	1	
70	63132-88L00	.STOPPER, TILLER HANDLE	1	
71	63251-88L90	.BOLT	2	
72	37855-88L90	.SCREW, THROTTLE GRIP	1	
73	37854-88L90	.WASHER,THROTTLE GRIP	1	
74	63258-88L00	.WASHER	1	
75	09440-06037	.SPRING	1	
76	03522-05169	.SCREW	3	
77	63247-99J00	.PLATE, THROTTLE ADJ KNOB	1	
78	63111-88L00-0EP	.HOUSING, TILLER HANDLE (BLACK)	1	
79	33834-88L00	.TUBE, CABLE PROTECTOR	1	
80	65793-88L00	.HOLDER, FUEL HOSE	1	
81	09116-06237	.BOLT (6X15)	2	

FIG.570C

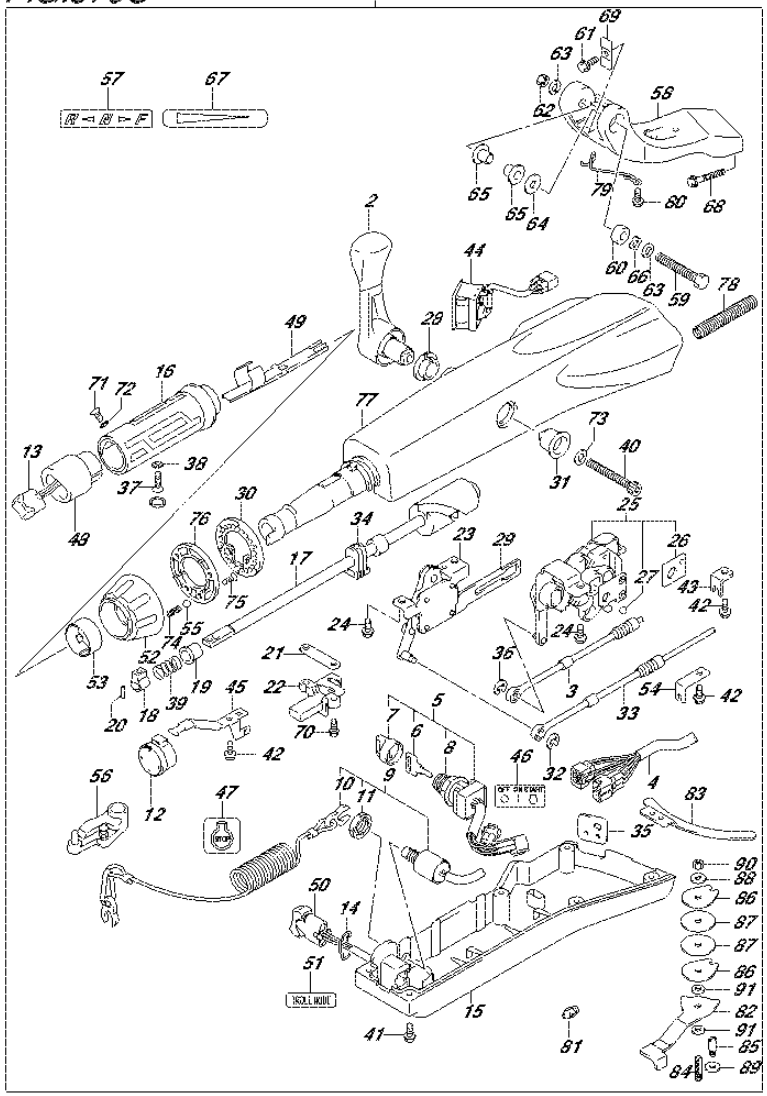

FIG.570C (5-D-3) OPT:TILLER HANDLE (DF50A E01)

REF NO.	PART NO.	DESCRIPTION	Q'TY	REMARKS
1	63002-88L21-0EP	KIT TILLER HANDLE (BLACK)	1	
2	21110-88L00	.LEVER, SHIFT	1	
3	23230-88L00	.CABLE, SHIFT	1	
4	36620-88L10	.WIRE ASSY, HANDLE	1	
5	37110-87L01	.SWITCH ASSY, IGNITION	1	
6-1	37141-99E00	..KEY (931)	1	
6-2	37141-99E10	..KEY (932)	1	
6-3	37141-99E20	..KEY (933)	1	
6-4	37141-99E30	..KEY (934)	1	
6-5	37141-99E40	..KEY (935)	1	
6-6	37141-99E50	..KEY (936)	1	
6-7	37141-99E60	..KEY (937)	1	
6-8	37141-99E70	..KEY (938)	1	
6-9	37141-99E80	..KEY (939)	1	
6-10	37141-99E90	..KEY (940)	1	
6-11	37141-99EA0	..KEY (941)	1	
6-12	37141-99EB0	..KEY (942)	1	
7	37143-99E00	..CAP, KEY	1	
8	37149-93J00	..CAP, CYLINDER BODY	1	
9	37820-87L01	.SWITCH ASSY, EMERGENCY	1	
10	37823-92E01	..PLATE, LOCK	1	
11	37826-92J00	..NUT	1	
12	38500-93J90	.BUZZER	1	
13	37850-87L00	.SWITCH ASSY, PTT	1	
14	37852-87J00	.PLATE, TRIM SWITCH	1	
15	63121-88L00	.COVER, UNDER	1	
16	63210-88L00	.GRIP, HANDLE	1	
17	63221-88L00	.SHAFT, THROTTLE	1	
18	63223-92D00	.STOPPER, HANDLE ROD	1	
19	63225-88L00	.BUSH, HANDLE ROD	1	
20	63227-93200	.PIN, HANDLE ROD	1	
21	63235-88L00	.PLATE, THROTTLE SHAFT	1	
22	63246-88L00	.STOPPER THROTTLE ADJ	1	
23	63250-88L00	.ARM ASSY, THROTTLE	1	

FIG.570C

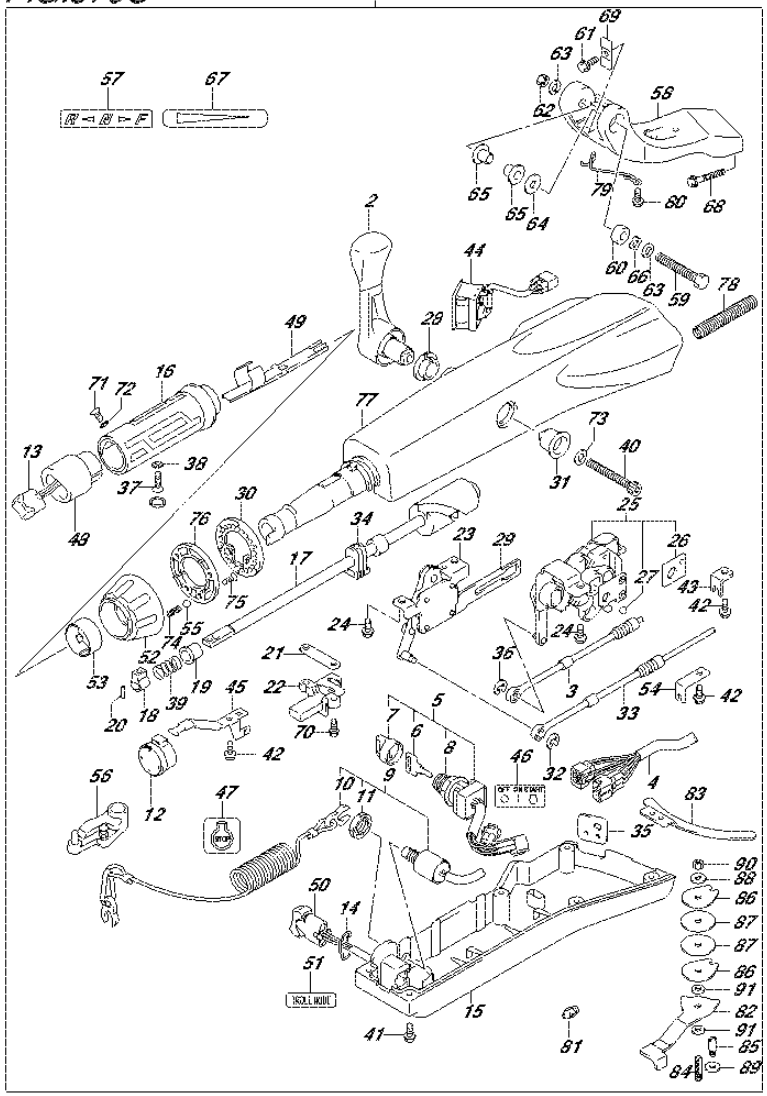

FIG.570C (5-D-4) OPT:TILLER HANDLE (DF50A E01)

REF NO.	PART NO.	DESCRIPTION	Q'TY	REMARKS
24	63251-87J00	.BOLT, SHIFT GEAR ASSY	4	
25	63260-88L00	.GEAR ASSY, SHIFT	1	
26	63272-87J00	..PLATE, BALL GUIDE	1	
27	63273-87J00	..BALL	1	
28	63262-87J00	.BUSH, SHIFT LEVER	1	
29	63271-87J00	.PLATE, LOCK	1	
30	63248-99J00	.PLATE, THROTTLE ADJ NOTCH	1	
31	63261-87J00	.BUSH, SHIFT GEAR	1	
32	63274-87J00	.E RING	1	
33	63610-88L00	.CABLE, THROTTLE	1	
34	37853-88L90	.GROMMET, PTT SWITCH LEAD	1	
35	63626-88L00	.GROMMET, WIRE HARNESS	1	
36	67292-87J00	.E RING	2	
37	09126-06015	.SCREW (6X23)	1	
38	09163-06001	.LOCK WASHER	1	
39	09440-12027	.SPRING	1	
40	21112-88L00	.BOLT SHIFT LEVER	1	
41	09125-05047	.SCREW (5X14)	6	
42	63611-88L00	.BOLT CLAMP BRACKET	3	
43	63612-87J00	.BRACKET, CLAMP	1	
44	34200-87L00	.TACHOMETER ASSY, WITH MONITOR	1	
45	36617-88L90	.CLAMP PLATE, MAIN HARNESS	1	
46	37112-88L90	.LABEL, IGNITION SWITCH	1	
47	37835-95D00	.LABEL, STOP	1	
48	37851-88L90	.BASE, PTT SWITCH	1	
49	37852-88L90	.HARNESS, GUIDE	1	
50	37861-87L10	.SWITCH, TROLLING CONTROL	1	
51	37864-88L90	.LABEL, TROLL MODE	1	
52	63244-99J00	.KNOB, THROTTLE ADJ	1	
53	63245-99J00	.BUSH, THROTTLE ADJ	1	
54	63612-88L10	.BRACKET, CLAMP SHIFT	1	
55	09260-10006	.BALL	1	
56	19120-88L11	.LEVER, THROTTLE	1	
57	21131-88L00	.MARK, CLUTCH SHIFT	1	

FIG.570C

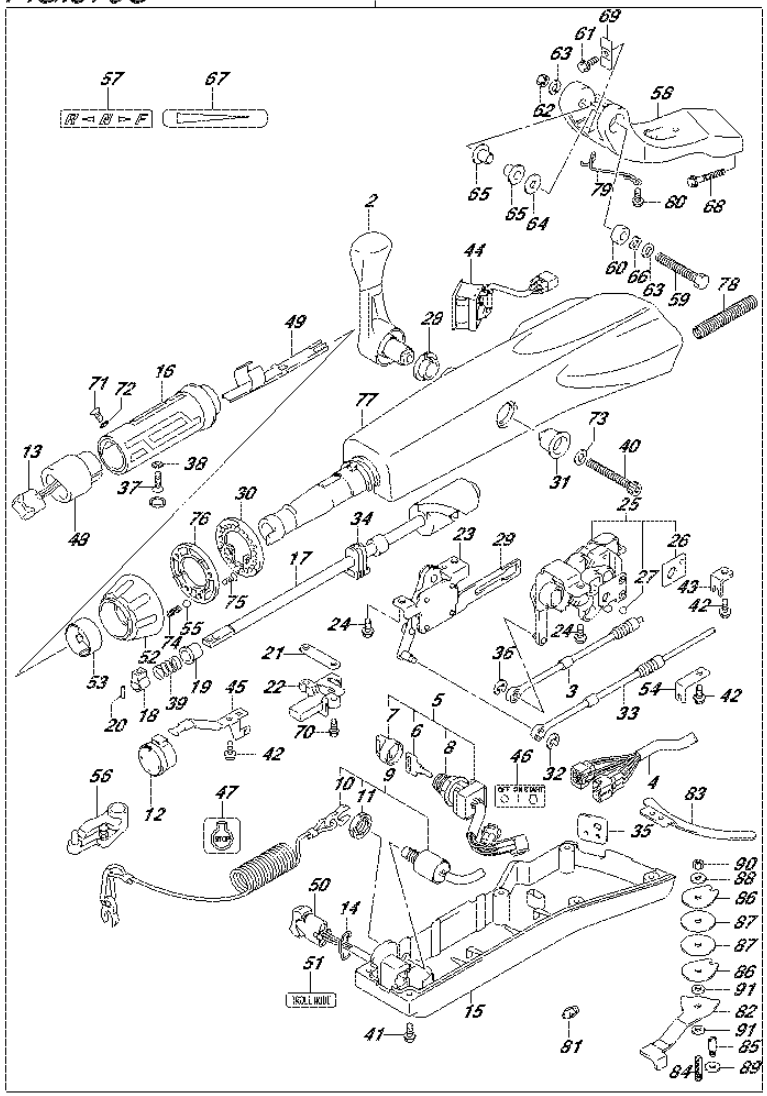

FIG.570C (5-D-5) OPT:TILLER HANDLE (DF50A E01)

REF NO.	PART NO.	DESCRIPTION	Q'TY	REMARKS
58	43761-88L01-0EP	.BRACKET, TILLER HANDLE (BLACK)	1	
59	43762-88L00	.BOLT TILLER HANDLE PIVOT	1	
60	43768-88L00	.SPACER, TILLER HANDLE	1	
61	09116-08137	.BOLT (8X22)	1	
62	09159-12014	.NUT	1	
63	09160-12066	.WASHER (12.5X22X2.5)	2	
64	09160-12124	.WASHER (12.5X32X1.5)	1	
65	63115-88L00	.BUSH, TILLER HANDLE	2	
66	09164-13010	.WASHER	1	
67	63215-93110	.MARK, HANDLE GRIP	1	
68	09116-10150	.BOLT (10X55)	2	
69	63132-88L00	.STOPPER, TILLER HANDLE	1	
70	63251-88L90	.BOLT	2	
71	37855-88L90	.SCREW, THROTTLE GRIP	1	
72	37854-88L90	.WASHER,THROTTLE GRIP	1	
73	63258-88L00	.WASHER	1	
74	09440-06037	.SPRING	1	
75	03522-05169	.SCREW	3	
76	63247-99J00	.PLATE, THROTTLE ADJ KNOB	1	
77	63111-88L00-0EP	.HOUSING, TILLER HANDLE (BLACK)	1	
78	33834-88L00	.TUBE, CABLE PROTECTOR	1	
79	65793-88L00	.HOLDER, FUEL HOSE	1	
80	09116-06237	.BOLT (6X15)	2	
81	22511-99011	.NIPPLE, GREASE	1	
82	43411-88L00	.ADJUSTER, STEERING	1	
83	43415-88L00	.PLATE, STEERING ADJUSTER	1	
84	43512-88L00	.SHAFT, STEERING ADJ THREAD	1	
85	43513-88L00	.BOLT, STEERING ADJUSTER	1	
86	43514-88L00	.PLATE, STEERING ADJ FRICTION	2	
87	43515-88L00	.WASHER, STRG ADJ FRICTION PLATE	2	
88	43516-88L00	.WASHER, STRG ADJ FRICTION	1	
89	43517-88L00	.SPACER, STEERING ADJUSTER	1	

FIG.570C

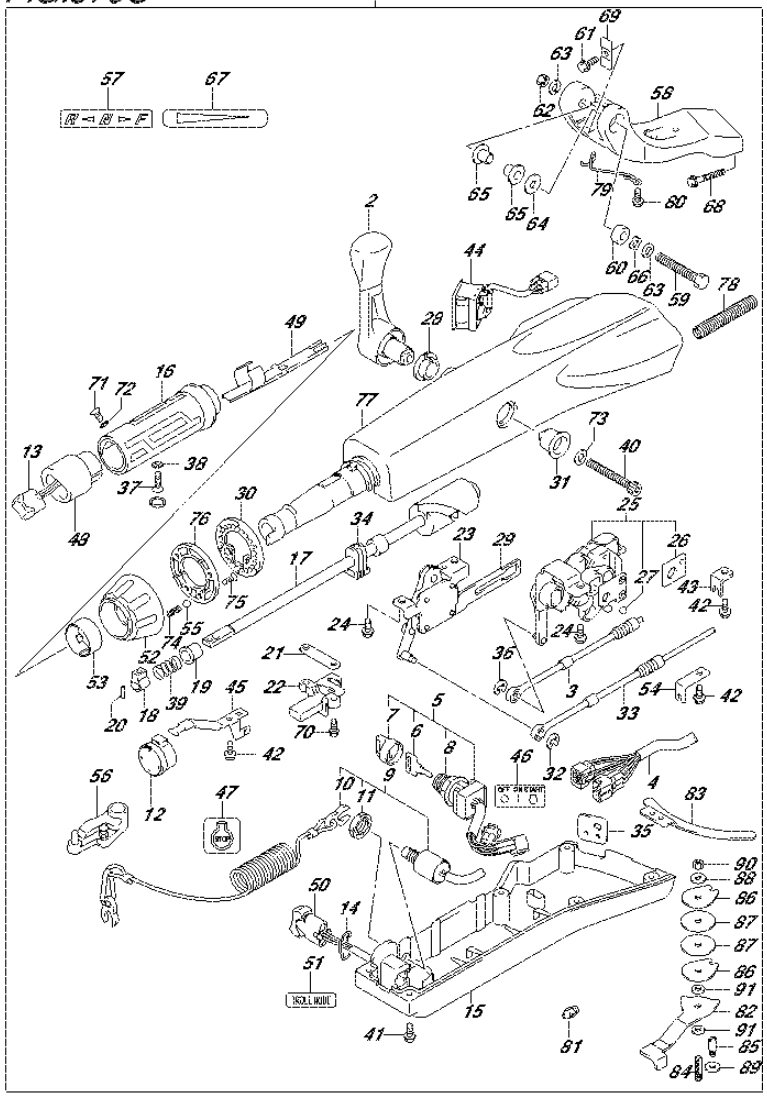

FIG.570C (5-D-6) OPT:TILLER HANDLE (DF50A E01)

REF NO.	PART NO.	DESCRIPTION	Q'TY	REMARKS
90	09159-08059	.NUT	1	
91	09161-08011	.WASHER (8.2X18X1.2)	2	

FIG.570D

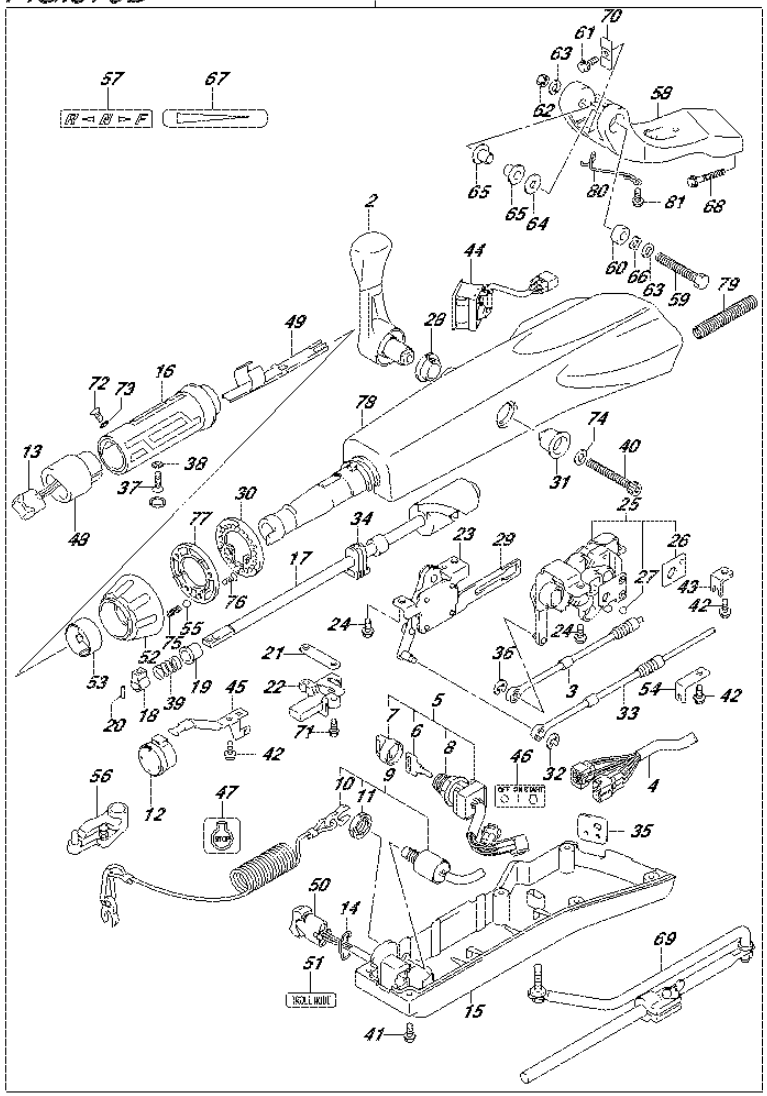

FIG.570D (5-D-7) OPT:TILLER HANDLE (DF60A E01)

REF NO.	PART NO.	DESCRIPTION	Q'TY	REMARKS
1	63002-88L11-0EP	KIT TILLER HANDLE (BLACK)	1	
2	21110-88L00	.LEVER, SHIFT	1	
3	23230-88L00	.CABLE, SHIFT	1	
4	36620-88L10	.WIRE ASSY, HANDLE	1	
5	37110-87L01	.SWITCH ASSY, IGNITION	1	
6-1	37141-99E00	..KEY (931)	1	
6-2	37141-99E10	..KEY (932)	1	
6-3	37141-99E20	..KEY (933)	1	
6-4	37141-99E30	..KEY (934)	1	
6-5	37141-99E40	..KEY (935)	1	
6-6	37141-99E50	..KEY (936)	1	
6-7	37141-99E60	..KEY (937)	1	
6-8	37141-99E70	..KEY (938)	1	
6-9	37141-99E80	..KEY (939)	1	
6-10	37141-99E90	..KEY (940)	1	
6-11	37141-99EA0	..KEY (941)	1	
6-12	37141-99EB0	..KEY (942)	1	
7	37143-99E00	..CAP, KEY	1	
8	37149-93J00	..CAP, CYLINDER BODY	1	
9	37820-87L01	.SWITCH ASSY, EMERGENCY	1	
10	37823-92E01	..PLATE, LOCK	1	
11	37826-92J00	..NUT	1	
12	38500-93J90	.BUZZER	1	
13	37850-87L00	.SWITCH ASSY, PTT	1	
14	37852-87J00	.PLATE, TRIM SWITCH	1	
15	63121-88L00	.COVER, UNDER	1	
16	63210-88L00	.GRIP, HANDLE	1	
17	63221-88L00	.SHAFT, THROTTLE	1	
18	63223-92D00	.STOPPER, HANDLE ROD	1	
19	63225-88L00	.BUSH, HANDLE ROD	1	
20	63227-93200	.PIN, HANDLE ROD	1	
21	63235-88L00	.PLATE, THROTTLE SHAFT	1	
22	63246-88L00	.STOPPER THROTTLE ADJ	1	
23	63250-88L00	.ARM ASSY, THROTTLE	1	

FIG.570D

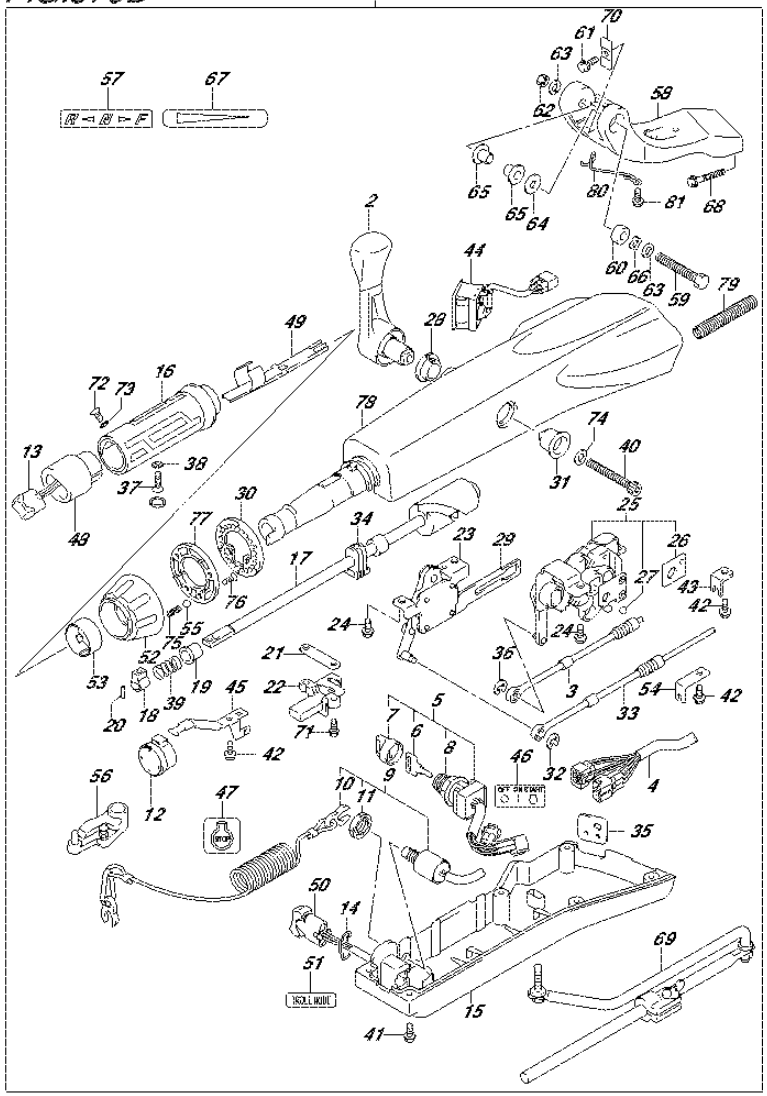

FIG.570D (5-D-8) OPT:TILLER HANDLE (DF60A E01)

REF NO.	PART NO.	DESCRIPTION	Q'TY	REMARKS
24	63251-87J00	.BOLT, SHIFT GEAR ASSY	4	
25	63260-88L00	.GEAR ASSY, SHIFT	1	
26	63272-87J00	..PLATE, BALL GUIDE	1	
27	63273-87J00	..BALL	1	
28	63262-87J00	.BUSH, SHIFT LEVER	1	
29	63271-87J00	.PLATE, LOCK	1	
30	63248-99J00	.PLATE, THROTTLE ADJ NOTCH	1	
31	63261-87J00	.BUSH, SHIFT GEAR	1	
32	63274-87J00	.E RING	1	
33	63610-88L00	.CABLE, THROTTLE	1	
34	37853-88L90	.GROMMET, PTT SWITCH LEAD	1	
35	63626-88L00	.GROMMET, WIRE HARNESS	1	
36	67292-87J00	.E RING	2	
37	09126-06015	.SCREW (6X23)	1	
38	09163-06001	.LOCK WASHER	1	
39	09440-12027	.SPRING	1	
40	21112-88L00	.BOLT SHIFT LEVER	1	
41	09125-05047	.SCREW (5X14)	6	
42	63611-88L00	.BOLT CLAMP BRACKET	3	
43	63612-87J00	.BRACKET, CLAMP	1	
44	34200-87L00	.TACHOMETER ASSY, WITH MONITOR	1	
45	36617-88L90	.CLAMP PLATE, MAIN HARNESS	1	
46	37112-88L90	.LABEL, IGNITION SWITCH	1	
47	37835-95D00	.LABEL, STOP	1	
48	37851-88L90	.BASE, PTT SWITCH	1	
49	37852-88L90	.HARNESS, GUIDE	1	
50	37861-87L10	.SWITCH, TROLLING CONTROL	1	
51	37864-88L90	.LABEL, TROLL MODE	1	
52	63244-99J00	.KNOB, THROTTLE ADJ	1	
53	63245-99J00	.BUSH, THROTTLE ADJ	1	
54	63612-88L10	.BRACKET, CLAMP SHIFT	1	
55	09260-10006	.BALL	1	
56	19120-88L11	.LEVER, THROTTLE	1	
57	21131-88L00	.MARK, CLUTCH SHIFT	1	

FIG.570D

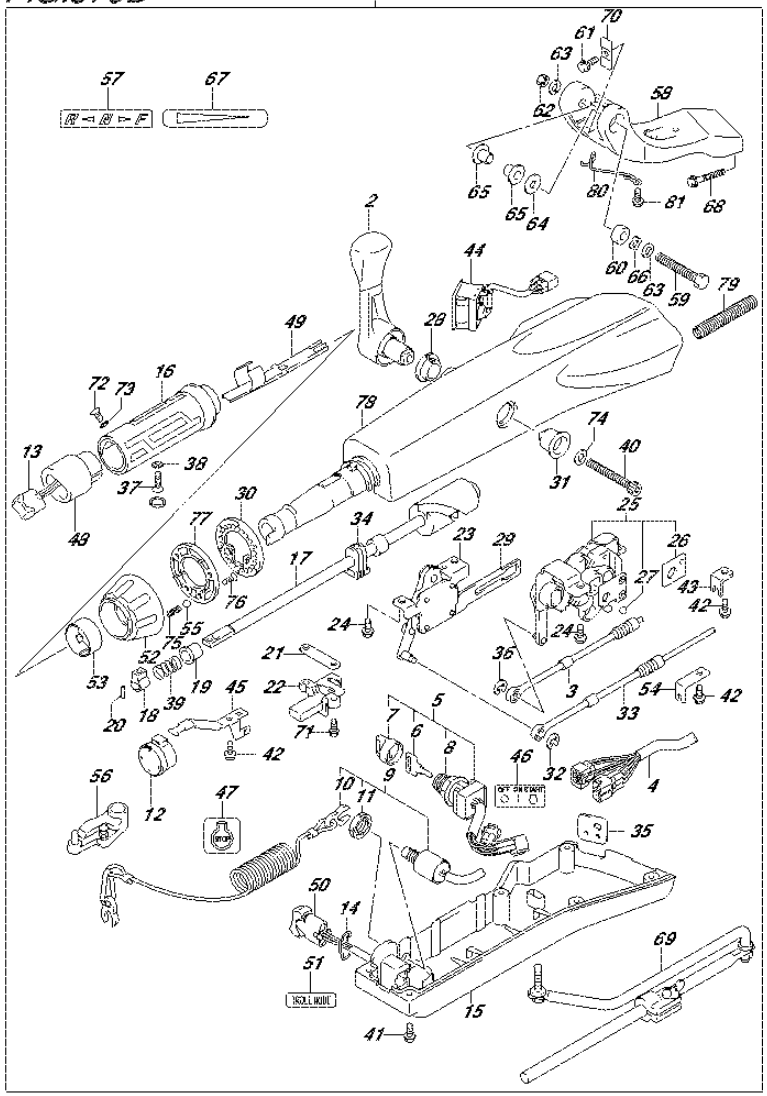

FIG.570D (5-D-9) OPT:TILLER HANDLE (DF60A E01)

REF NO.	PART NO.	DESCRIPTION	Q'TY	REMARKS
58	43761-88L01-0EP	.BRACKET, TILLER HANDLE (BLACK)	1	
59	43762-88L00	.BOLT TILLER HANDLE PIVOT	1	
60	43768-88L00	.SPACER, TILLER HANDLE	1	
61	09116-08137	.BOLT (8X22)	1	
62	09159-12014	.NUT	1	
63	09160-12066	.WASHER (12.5X22X2.5)	2	
64	09160-12124	.WASHER (12.5X32X1.5)	1	
65	63115-88L00	.BUSH, TILLER HANDLE	2	
66	09164-13010	.WASHER	1	
67	63215-93110	.MARK, HANDLE GRIP	1	
68	09116-10150	.BOLT (10X55)	2	
69	43770-99E03	.ADJUSTER ASSY, STEERING	1	
70	63132-88L00	.STOPPER, TILLER HANDLE	1	
71	63251-88L90	.BOLT	2	
72	37855-88L90	.SCREW, THROTTLE GRIP	1	
73	37854-88L90	.WASHER,THROTTLE GRIP	1	
74	63258-88L00	.WASHER	1	
75	09440-06037	.SPRING	1	
76	03522-05169	.SCREW	3	
77	63247-99J00	.PLATE, THROTTLE ADJ KNOB	1	
78	63111-88L00-0EP	.HOUSING, TILLER HANDLE (BLACK)	1	
79	33834-88L00	.TUBE, CABLE PROTECTOR	1	
80	65793-88L00	.HOLDER, FUEL HOSE	1	
81	09116-06237	.BOLT (6X15)	2	

FIG.570E

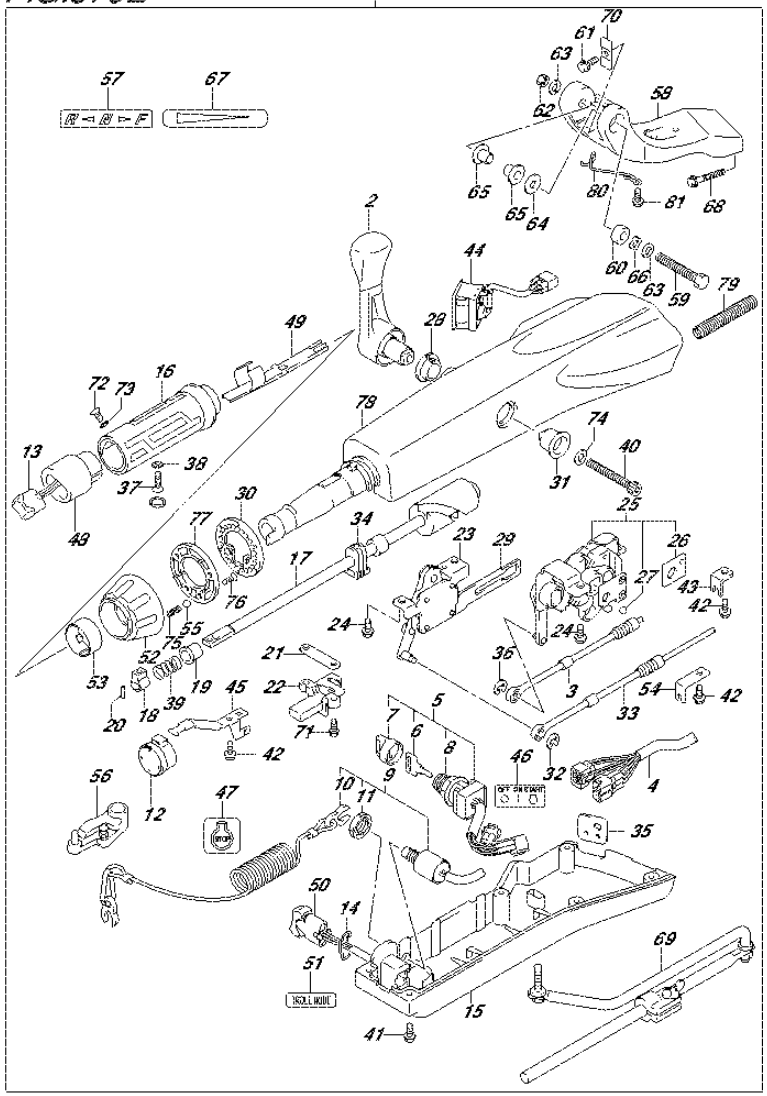

FIG.570E (5-D-10) OPT:TILLER HANDLE (DF60A E40)

REF NO.	PART NO.	DESCRIPTION	Q'TY	REMARKS
1	63002-88L11-0EP	KIT TILLER HANDLE (BLACK)	1	
2	21110-88L00	.LEVER, SHIFT	1	
3	23230-88L00	.CABLE, SHIFT	1	
4	36620-88L10	.WIRE ASSY, HANDLE	1	
5	37110-87L01	.SWITCH ASSY, IGNITION	1	
6-1	37141-99E00	..KEY (931)	1	
6-2	37141-99E10	..KEY (932)	1	
6-3	37141-99E20	..KEY (933)	1	
6-4	37141-99E30	..KEY (934)	1	
6-5	37141-99E40	..KEY (935)	1	
6-6	37141-99E50	..KEY (936)	1	
6-7	37141-99E60	..KEY (937)	1	
6-8	37141-99E70	..KEY (938)	1	
6-9	37141-99E80	..KEY (939)	1	
6-10	37141-99E90	..KEY (940)	1	
6-11	37141-99EA0	..KEY (941)	1	
6-12	37141-99EB0	..KEY (942)	1	
7	37143-99E00	..CAP, KEY	1	
8	37149-93J00	..CAP, CYLINDER BODY	1	
9	37820-87L01	.SWITCH ASSY, EMERGENCY	1	
10	37823-92E01	..PLATE, LOCK	1	
11	37826-92J00	..NUT	1	
12	38500-93J90	.BUZZER	1	
13	37850-87L00	.SWITCH ASSY, PTT	1	
14	37852-87J00	.PLATE, TRIM SWITCH	1	
15	63121-88L00	.COVER, UNDER	1	
16	63210-88L00	.GRIP, HANDLE	1	
17	63221-88L00	.SHAFT, THROTTLE	1	
18	63223-92D00	.STOPPER, HANDLE ROD	1	
19	63225-88L00	.BUSH, HANDLE ROD	1	
20	63227-93200	.PIN, HANDLE ROD	1	
21	63235-88L00	.PLATE, THROTTLE SHAFT	1	
22	63246-88L00	.STOPPER THROTTLE ADJ	1	
23	63250-88L00	.ARM ASSY, THROTTLE	1	

FIG.570E

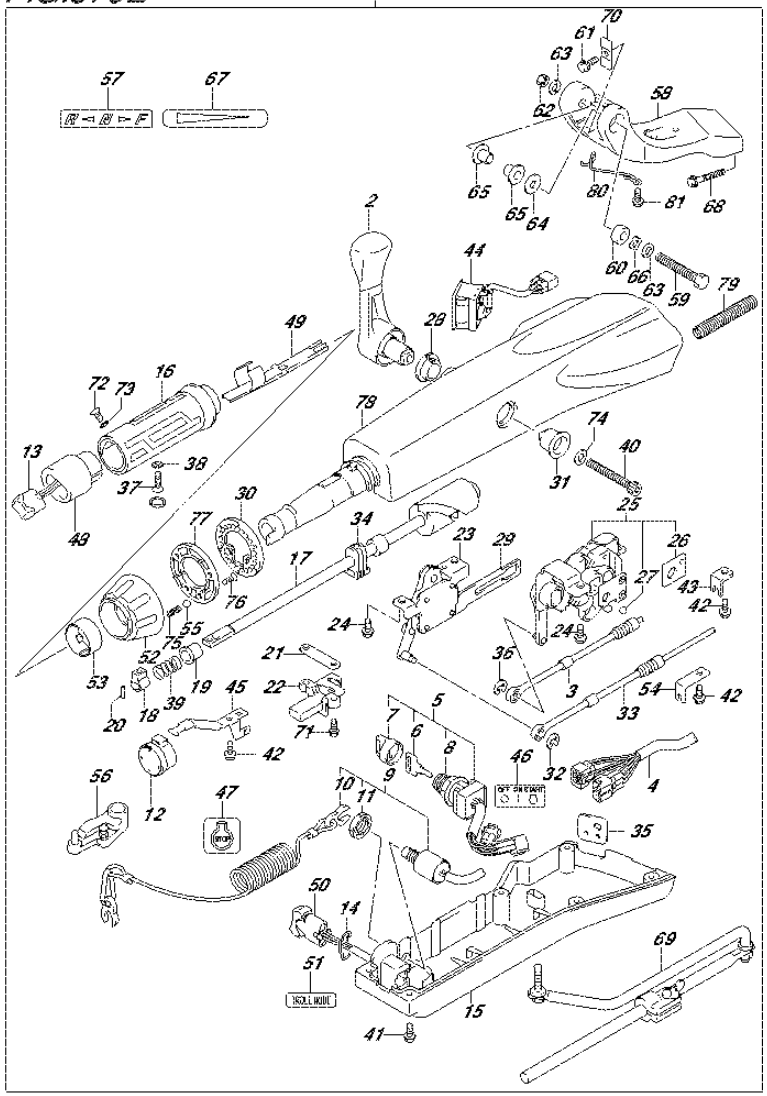

FIG.570E (5-D-11) OPT:TILLER HANDLE (DF60A E40)

REF NO.	PART NO.	DESCRIPTION	Q'TY	REMARKS
24	63251-87J00	.BOLT, SHIFT GEAR ASSY	4	
25	63260-88L00	.GEAR ASSY, SHIFT	1	
26	63272-87J00	..PLATE, BALL GUIDE	1	
27	63273-87J00	..BALL	1	
28	63262-87J00	.BUSH, SHIFT LEVER	1	
29	63271-87J00	.PLATE, LOCK	1	
30	63248-99J00	.PLATE, THROTTLE ADJ NOTCH	1	
31	63261-87J00	.BUSH, SHIFT GEAR	1	
32	63274-87J00	.E RING	1	
33	63610-88L00	.CABLE, THROTTLE	1	
34	37853-88L90	.GROMMET, PTT SWITCH LEAD	1	
35	63626-88L00	.GROMMET, WIRE HARNESS	1	
36	67292-87J00	.E RING	2	
37	09126-06015	.SCREW (6X23)	1	
38	09163-06001	.LOCK WASHER	1	
39	09440-12027	.SPRING	1	
40	21112-88L00	.BOLT SHIFT LEVER	1	
41	09125-05047	.SCREW (5X14)	6	
42	63611-88L00	.BOLT CLAMP BRACKET	3	
43	63612-87J00	.BRACKET, CLAMP	1	
44	34200-87L00	.TACHOMETER ASSY, WITH MONITOR	1	
45	36617-88L90	.CLAMP PLATE, MAIN HARNESS	1	
46	37112-88L90	.LABEL, IGNITION SWITCH	1	
47	37835-95D00	.LABEL, STOP	1	
48	37851-88L90	.BASE, PTT SWITCH	1	
49	37852-88L90	.HARNESS, GUIDE	1	
50	37861-87L10	.SWITCH, TROLLING CONTROL	1	
51	37864-88L90	.LABEL, TROLL MODE	1	
52	63244-99J00	.KNOB, THROTTLE ADJ	1	
53	63245-99J00	.BUSH, THROTTLE ADJ	1	
54	63612-88L10	.BRACKET, CLAMP SHIFT	1	
55	09260-10006	.BALL	1	
56	19120-88L11	.LEVER, THROTTLE	1	
57	21131-88L00	.MARK, CLUTCH SHIFT	1	

FIG.570E

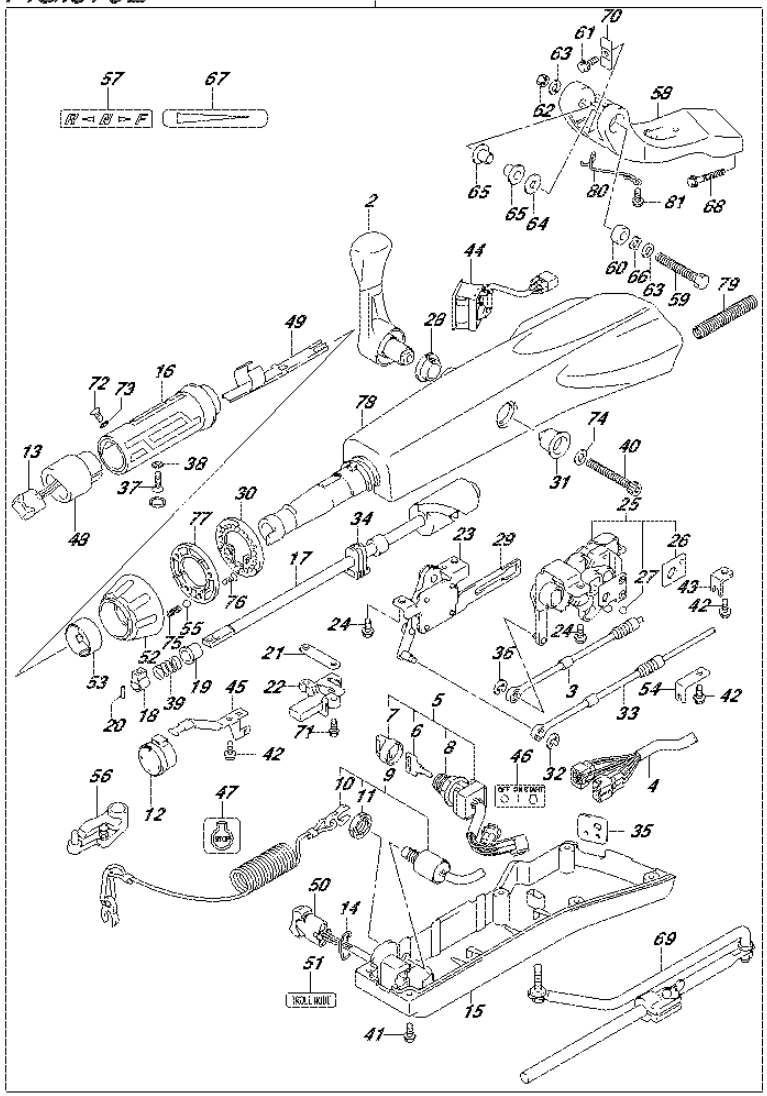

FIG.570E (5-D-12) OPT:TILLER HANDLE (DF60A E40)

REF NO.	PART NO.	DESCRIPTION	Q'TY	REMARKS
58	43761-88L01-0EP	.BRACKET, TILLER HANDLE (BLACK)	1	
59	43762-88L00	.BOLT TILLER HANDLE PIVOT	1	
60	43768-88L00	.SPACER, TILLER HANDLE	1	
61	09116-08137	.BOLT (8X22)	1	
62	09159-12014	.NUT	1	
63	09160-12066	.WASHER (12.5X22X2.5)	2	
64	09160-12124	.WASHER (12.5X32X1.5)	1	
65	63115-88L00	.BUSH, TILLER HANDLE	2	
66	09164-13010	.WASHER	1	
67	63215-93110	.MARK, HANDLE GRIP	1	
68	09116-10150	.BOLT (10X55)	2	
69	43770-99E03	.ADJUSTER ASSY, STEERING	1	
70	63132-88L00	.STOPPER, TILLER HANDLE	1	
71	63251-88L90	.BOLT	2	
72	37855-88L90	.SCREW, THROTTLE GRIP	1	
73	37854-88L90	.WASHER,THROTTLE GRIP	1	
74	63258-88L00	.WASHER	1	
75	09440-06037	.SPRING	1	
76	03522-05169	.SCREW	3	
77	63247-99J00	.PLATE, THROTTLE ADJ KNOB	1	
78	63111-88L00-0EP	.HOUSING, TILLER HANDLE (BLACK)	1	
79	33834-88L00	.TUBE, CABLE PROTECTOR	1	
80	65793-88L00	.HOLDER, FUEL HOSE	1	
81	09116-06237	.BOLT (6X15)	2	

FIG.570F

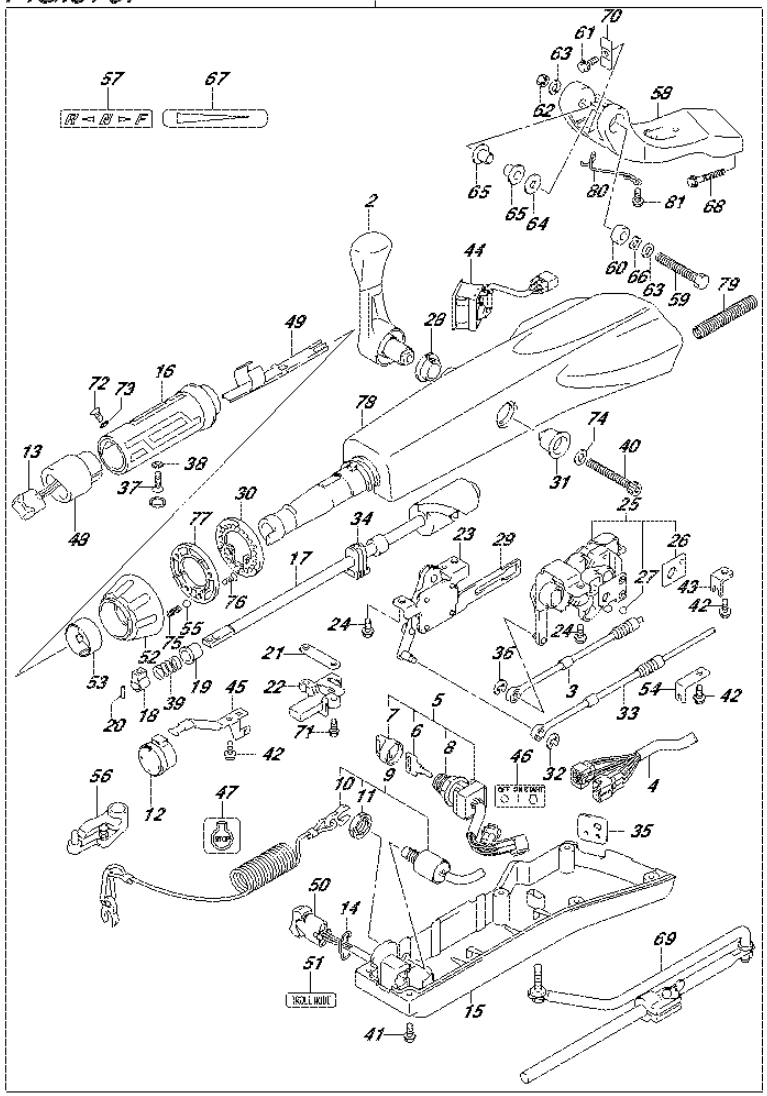

FIG.570F (5-D-13) OPT:TILLER HANDLE (DF50AVT E01)

REF NO.	PART NO.	DESCRIPTION	Q'TY	REMARKS
1	63002-88L11-0EP	KIT TILLER HANDLE (BLACK)	1	
2	21110-88L00	.LEVER, SHIFT	1	
3	23230-88L00	.CABLE, SHIFT	1	
4	36620-88L10	.WIRE ASSY, HANDLE	1	
5	37110-87L01	.SWITCH ASSY, IGNITION	1	
6-1	37141-99E00	..KEY (931)	1	
6-2	37141-99E10	..KEY (932)	1	
6-3	37141-99E20	..KEY (933)	1	
6-4	37141-99E30	..KEY (934)	1	
6-5	37141-99E40	..KEY (935)	1	
6-6	37141-99E50	..KEY (936)	1	
6-7	37141-99E60	..KEY (937)	1	
6-8	37141-99E70	..KEY (938)	1	
6-9	37141-99E80	..KEY (939)	1	
6-10	37141-99E90	..KEY (940)	1	
6-11	37141-99EA0	..KEY (941)	1	
6-12	37141-99EB0	..KEY (942)	1	
7	37143-99E00	..CAP, KEY	1	
8	37149-93J00	..CAP, CYLINDER BODY	1	
9	37820-87L01	.SWITCH ASSY, EMERGENCY	1	
10	37823-92E01	..PLATE, LOCK	1	
11	37826-92J00	..NUT	1	
12	38500-93J90	.BUZZER	1	
13	37850-87L00	.SWITCH ASSY, PTT	1	
14	37852-87J00	.PLATE, TRIM SWITCH	1	
15	63121-88L00	.COVER, UNDER	1	
16	63210-88L00	.GRIP, HANDLE	1	
17	63221-88L00	.SHAFT, THROTTLE	1	
18	63223-92D00	.STOPPER, HANDLE ROD	1	
19	63225-88L00	.BUSH, HANDLE ROD	1	
20	63227-93200	.PIN, HANDLE ROD	1	
21	63235-88L00	.PLATE, THROTTLE SHAFT	1	
22	63246-88L00	.STOPPER THROTTLE ADJ	1	
23	63250-88L00	.ARM ASSY, THROTTLE	1	

FIG.570F

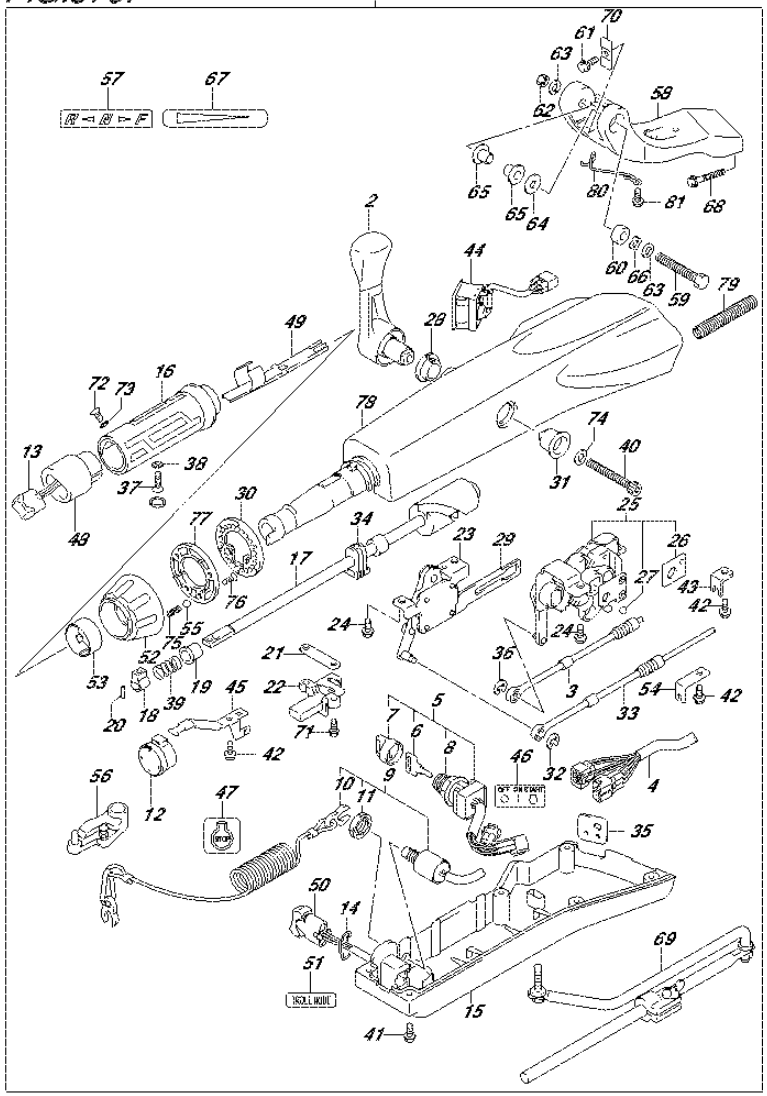

FIG.570F (5-D-14) OPT:TILLER HANDLE (DF50AVT E01)

REF NO.	PART NO.	DESCRIPTION	Q'TY	REMARKS
24	63251-87J00	.BOLT, SHIFT GEAR ASSY	4	
25	63260-88L00	.GEAR ASSY, SHIFT	1	
26	63272-87J00	..PLATE, BALL GUIDE	1	
27	63273-87J00	..BALL	1	
28	63262-87J00	.BUSH, SHIFT LEVER	1	
29	63271-87J00	.PLATE, LOCK	1	
30	63248-99J00	.PLATE, THROTTLE ADJ NOTCH	1	
31	63261-87J00	.BUSH, SHIFT GEAR	1	
32	63274-87J00	.E RING	1	
33	63610-88L00	.CABLE, THROTTLE	1	
34	37853-88L90	.GROMMET, PTT SWITCH LEAD	1	
35	63626-88L00	.GROMMET, WIRE HARNESS	1	
36	67292-87J00	.E RING	2	
37	09126-06015	.SCREW (6X23)	1	
38	09163-06001	.LOCK WASHER	1	
39	09440-12027	.SPRING	1	
40	21112-88L00	.BOLT SHIFT LEVER	1	
41	09125-05047	.SCREW (5X14)	6	
42	63611-88L00	.BOLT CLAMP BRACKET	3	
43	63612-87J00	.BRACKET, CLAMP	1	
44	34200-87L00	.TACHOMETER ASSY, WITH MONITOR	1	
45	36617-88L90	.CLAMP PLATE, MAIN HARNESS	1	
46	37112-88L90	.LABEL, IGNITION SWITCH	1	
47	37835-95D00	.LABEL, STOP	1	
48	37851-88L90	.BASE, PTT SWITCH	1	
49	37852-88L90	.HARNESS, GUIDE	1	
50	37861-87L10	.SWITCH, TROLLING CONTROL	1	
51	37864-88L90	.LABEL, TROLL MODE	1	
52	63244-99J00	.KNOB, THROTTLE ADJ	1	
53	63245-99J00	.BUSH, THROTTLE ADJ	1	
54	63612-88L10	.BRACKET, CLAMP SHIFT	1	
55	09260-10006	.BALL	1	
56	19120-88L11	.LEVER, THROTTLE	1	
57	21131-88L00	.MARK, CLUTCH SHIFT	1	

FIG.570F

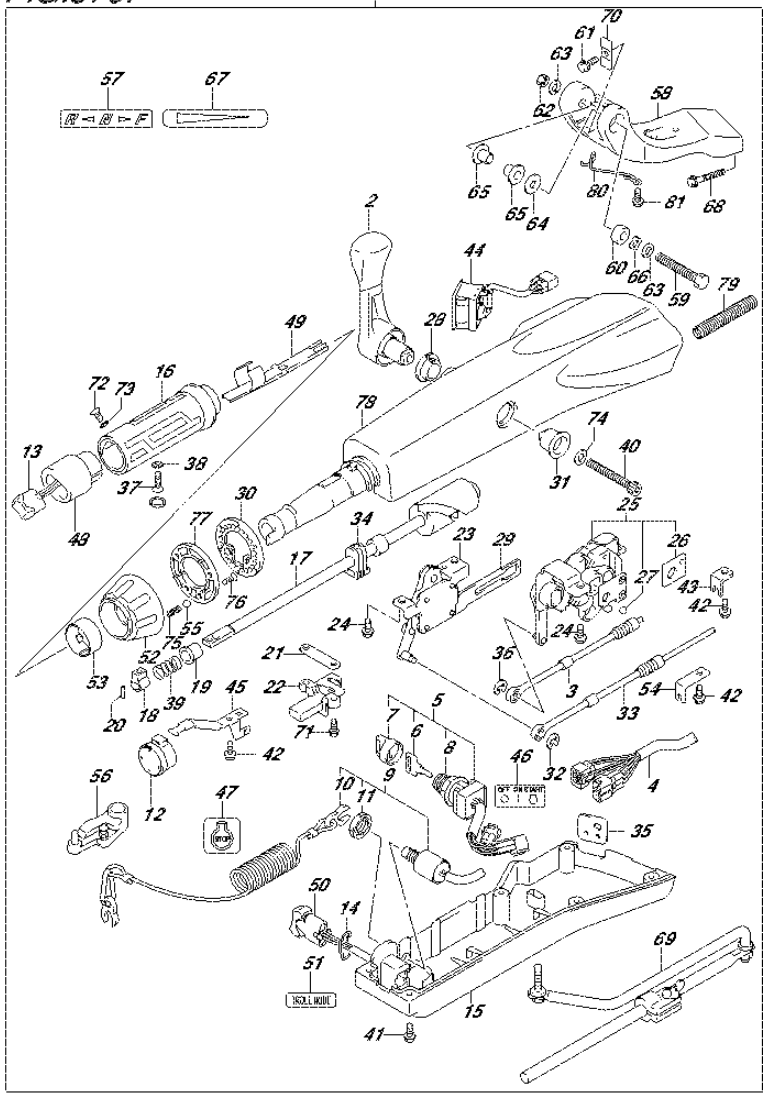

FIG.570F (5-D-15) OPT:TILLER HANDLE (DF50AVT E01)

REF NO.	PART NO.	DESCRIPTION	Q'TY	REMARKS
58	43761-88L01-0EP	.BRACKET, TILLER HANDLE (BLACK)	1	
59	43762-88L00	.BOLT TILLER HANDLE PIVOT	1	
60	43768-88L00	.SPACER, TILLER HANDLE	1	
61	09116-08137	.BOLT (8X22)	1	
62	09159-12014	.NUT	1	
63	09160-12066	.WASHER (12.5X22X2.5)	2	
64	09160-12124	.WASHER (12.5X32X1.5)	1	
65	63115-88L00	.BUSH, TILLER HANDLE	2	
66	09164-13010	.WASHER	1	
67	63215-93110	.MARK, HANDLE GRIP	1	
68	09116-10150	.BOLT (10X55)	2	
69	43770-99E03	.ADJUSTER ASSY, STEERING	1	
70	63132-88L00	.STOPPER, TILLER HANDLE	1	
71	63251-88L90	.BOLT	2	
72	37855-88L90	.SCREW, THROTTLE GRIP	1	
73	37854-88L90	.WASHER,THROTTLE GRIP	1	
74	63258-88L00	.WASHER	1	
75	09440-06037	.SPRING	1	
76	03522-05169	.SCREW	3	
77	63247-99J00	.PLATE, THROTTLE ADJ KNOB	1	
78	63111-88L00-0EP	.HOUSING, TILLER HANDLE (BLACK)	1	
79	33834-88L00	.TUBE, CABLE PROTECTOR	1	
80	65793-88L00	.HOLDER, FUEL HOSE	1	
81	09116-06237	.BOLT (6X15)	2	

FIG.570G

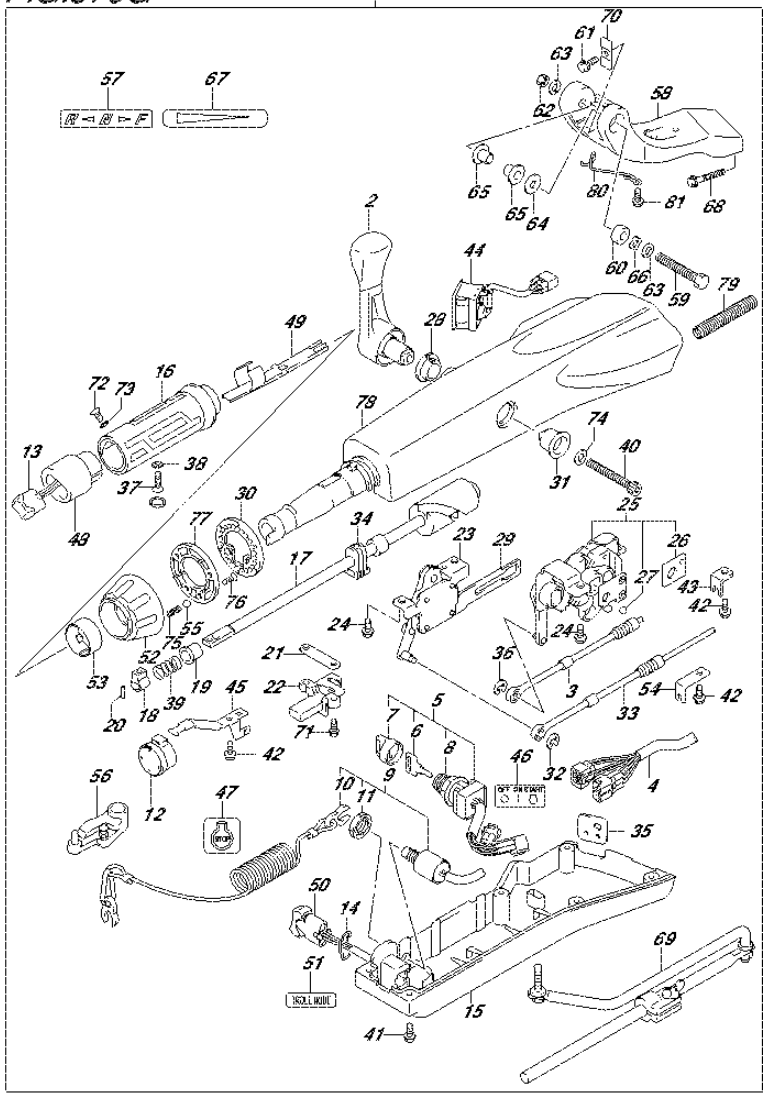

FIG.570G (5-E-2) OPT:TILLER HANDLE (DF60AVT E01)

REF NO.	PART NO.	DESCRIPTION	Q'TY	REMARKS
1	63002-88L11-0EP	KIT TILLER HANDLE (BLACK)	1	
2	21110-88L00	.LEVER, SHIFT	1	
3	23230-88L00	.CABLE, SHIFT	1	
4	36620-88L10	.WIRE ASSY, HANDLE	1	
5	37110-87L01	.SWITCH ASSY, IGNITION	1	
6-1	37141-99E00	..KEY (931)	1	
6-2	37141-99E10	..KEY (932)	1	
6-3	37141-99E20	..KEY (933)	1	
6-4	37141-99E30	..KEY (934)	1	
6-5	37141-99E40	..KEY (935)	1	
6-6	37141-99E50	..KEY (936)	1	
6-7	37141-99E60	..KEY (937)	1	
6-8	37141-99E70	..KEY (938)	1	
6-9	37141-99E80	..KEY (939)	1	
6-10	37141-99E90	..KEY (940)	1	
6-11	37141-99EA0	..KEY (941)	1	
6-12	37141-99EB0	..KEY (942)	1	
7	37143-99E00	..CAP, KEY	1	
8	37149-93J00	..CAP, CYLINDER BODY	1	
9	37820-87L01	.SWITCH ASSY, EMERGENCY	1	
10	37823-92E01	..PLATE, LOCK	1	
11	37826-92J00	..NUT	1	
12	38500-93J90	.BUZZER	1	
13	37850-87L00	.SWITCH ASSY, PTT	1	
14	37852-87J00	.PLATE, TRIM SWITCH	1	
15	63121-88L00	.COVER, UNDER	1	
16	63210-88L00	.GRIP, HANDLE	1	
17	63221-88L00	.SHAFT, THROTTLE	1	
18	63223-92D00	.STOPPER, HANDLE ROD	1	
19	63225-88L00	.BUSH, HANDLE ROD	1	
20	63227-93200	.PIN, HANDLE ROD	1	
21	63235-88L00	.PLATE, THROTTLE SHAFT	1	
22	63246-88L00	.STOPPER THROTTLE ADJ	1	
23	63250-88L00	.ARM ASSY, THROTTLE	1	

FIG.570G

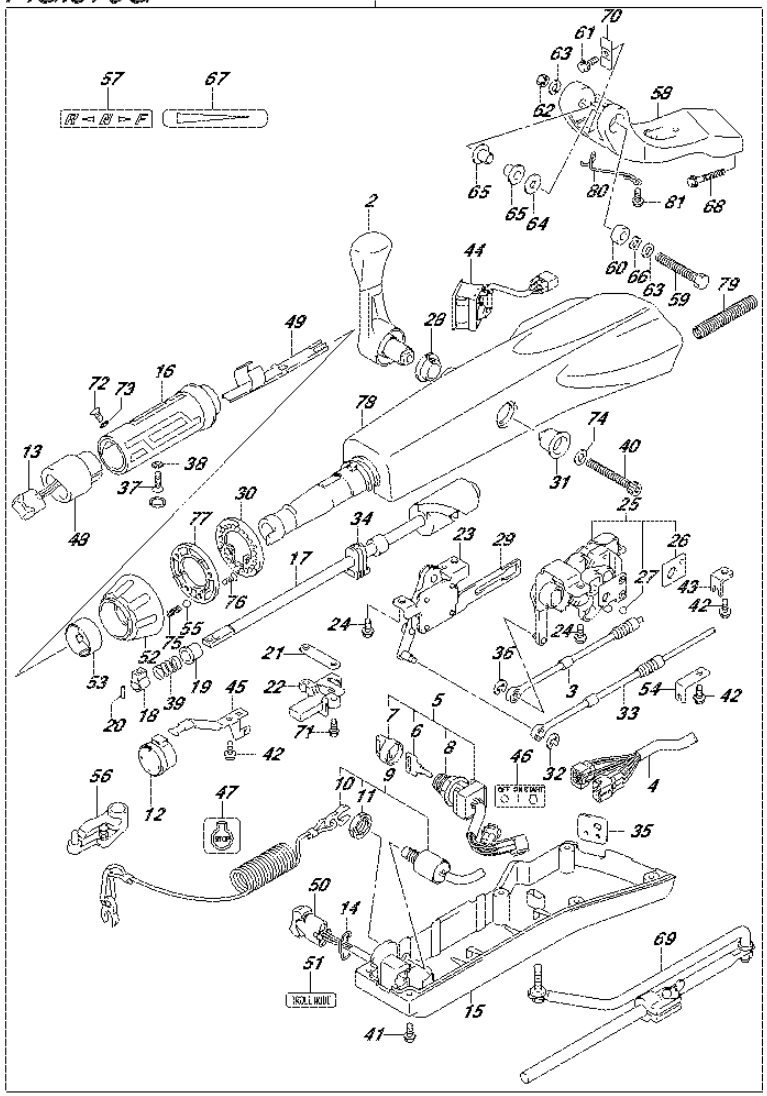

FIG.570G (5-E-3) OPT:TILLER HANDLE (DF60AVT E01)

REF NO.	PART NO.	DESCRIPTION	Q'TY	REMARKS
24	63251-87J00	.BOLT, SHIFT GEAR ASSY	4	
25	63260-88L00	.GEAR ASSY, SHIFT	1	
26	63272-87J00	..PLATE, BALL GUIDE	1	
27	63273-87J00	..BALL	1	
28	63262-87J00	.BUSH, SHIFT LEVER	1	
29	63271-87J00	.PLATE, LOCK	1	
30	63248-99J00	.PLATE, THROTTLE ADJ NOTCH	1	
31	63261-87J00	.BUSH, SHIFT GEAR	1	
32	63274-87J00	.E RING	1	
33	63610-88L00	.CABLE, THROTTLE	1	
34	37853-88L90	.GROMMET, PTT SWITCH LEAD	1	
35	63626-88L00	.GROMMET, WIRE HARNESS	1	
36	67292-87J00	.E RING	2	
37	09126-06015	.SCREW (6X23)	1	
38	09163-06001	.LOCK WASHER	1	
39	09440-12027	.SPRING	1	
40	21112-88L00	.BOLT SHIFT LEVER	1	
41	09125-05047	.SCREW (5X14)	6	
42	63611-88L00	.BOLT CLAMP BRACKET	3	
43	63612-87J00	.BRACKET, CLAMP	1	
44	34200-87L00	.TACHOMETER ASSY, WITH MONITOR	1	
45	36617-88L90	.CLAMP PLATE, MAIN HARNESS	1	
46	37112-88L90	.LABEL, IGNITION SWITCH	1	
47	37835-95D00	.LABEL, STOP	1	
48	37851-88L90	.BASE, PTT SWITCH	1	
49	37852-88L90	.HARNESS, GUIDE	1	
50	37861-87L10	.SWITCH, TROLLING CONTROL	1	
51	37864-88L90	.LABEL, TROLL MODE	1	
52	63244-99J00	.KNOB, THROTTLE ADJ	1	
53	63245-99J00	.BUSH, THROTTLE ADJ	1	
54	63612-88L10	.BRACKET, CLAMP SHIFT	1	
55	09260-10006	.BALL	1	
56	19120-88L11	.LEVER, THROTTLE	1	
57	21131-88L00	.MARK, CLUTCH SHIFT	1	

FIG.570G

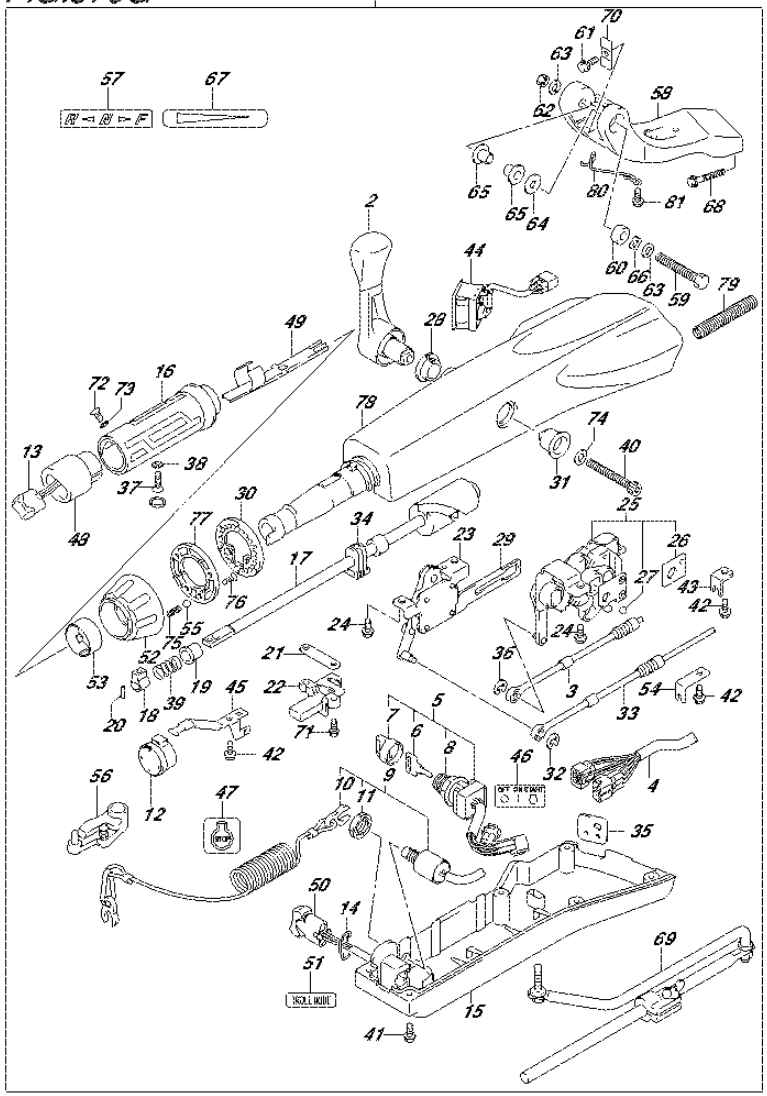

FIG.570G (5-E-4) OPT:TILLER HANDLE (DF60AVT E01)

REF NO.	PART NO.	DESCRIPTION	Q'TY	REMARKS
58	43761-88L01-0EP	.BRACKET, TILLER HANDLE (BLACK)	1	
59	43762-88L00	.BOLT TILLER HANDLE PIVOT	1	
60	43768-88L00	.SPACER, TILLER HANDLE	1	
61	09116-08137	.BOLT (8X22)	1	
62	09159-12014	.NUT	1	
63	09160-12066	.WASHER (12.5X22X2.5)	2	
64	09160-12124	.WASHER (12.5X32X1.5)	1	
65	63115-88L00	.BUSH, TILLER HANDLE	2	
66	09164-13010	.WASHER	1	
67	63215-93110	.MARK, HANDLE GRIP	1	
68	09116-10150	.BOLT (10X55)	2	
69	43770-99E03	.ADJUSTER ASSY, STEERING	1	
70	63132-88L00	.STOPPER, TILLER HANDLE	1	
71	63251-88L90	.BOLT	2	
72	37855-88L90	.SCREW, THROTTLE GRIP	1	
73	37854-88L90	.WASHER,THROTTLE GRIP	1	
74	63258-88L00	.WASHER	1	
75	09440-06037	.SPRING	1	
76	03522-05169	.SCREW	3	
77	63247-99J00	.PLATE, THROTTLE ADJ KNOB	1	
78	63111-88L00-0EP	.HOUSING, TILLER HANDLE (BLACK)	1	
79	33834-88L00	.TUBE, CABLE PROTECTOR	1	
80	65793-88L00	.HOLDER, FUEL HOSE	1	
81	09116-06237	.BOLT (6X15)	2	

FIG.570H

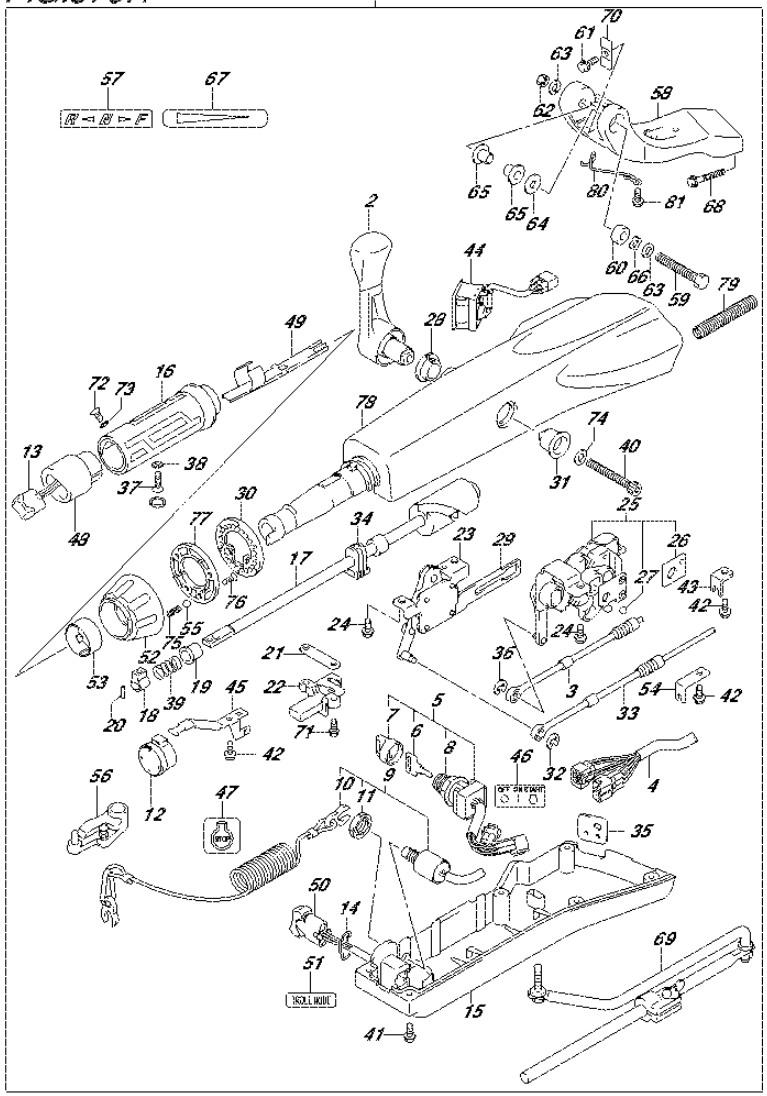

FIG.570H (5-E-5) OPT:TILLER HANDLE (DF60AVT E40)

REF NO.	PART NO.	DESCRIPTION	Q'TY	REMARKS
1	63002-88L11-0EP	KIT TILLER HANDLE (BLACK)	1	
2	21110-88L00	.LEVER, SHIFT	1	
3	23230-88L00	.CABLE, SHIFT	1	
4	36620-88L10	.WIRE ASSY, HANDLE	1	
5	37110-87L01	.SWITCH ASSY, IGNITION	1	
6-1	37141-99E00	..KEY (931)	1	
6-2	37141-99E10	..KEY (932)	1	
6-3	37141-99E20	..KEY (933)	1	
6-4	37141-99E30	..KEY (934)	1	
6-5	37141-99E40	..KEY (935)	1	
6-6	37141-99E50	..KEY (936)	1	
6-7	37141-99E60	..KEY (937)	1	
6-8	37141-99E70	..KEY (938)	1	
6-9	37141-99E80	..KEY (939)	1	
6-10	37141-99E90	..KEY (940)	1	
6-11	37141-99EA0	..KEY (941)	1	
6-12	37141-99EB0	..KEY (942)	1	
7	37143-99E00	..CAP, KEY	1	
8	37149-93J00	..CAP, CYLINDER BODY	1	
9	37820-87L01	.SWITCH ASSY, EMERGENCY	1	
10	37823-92E01	..PLATE, LOCK	1	
11	37826-92J00	..NUT	1	
12	38500-93J90	.BUZZER	1	
13	37850-87L00	.SWITCH ASSY, PTT	1	
14	37852-87J00	.PLATE, TRIM SWITCH	1	
15	63121-88L00	.COVER, UNDER	1	
16	63210-88L00	.GRIP, HANDLE	1	
17	63221-88L00	.SHAFT, THROTTLE	1	
18	63223-92D00	.STOPPER, HANDLE ROD	1	
19	63225-88L00	.BUSH, HANDLE ROD	1	
20	63227-93200	.PIN, HANDLE ROD	1	
21	63235-88L00	.PLATE, THROTTLE SHAFT	1	
22	63246-88L00	.STOPPER THROTTLE ADJ	1	
23	63250-88L00	.ARM ASSY, THROTTLE	1	

FIG.570H

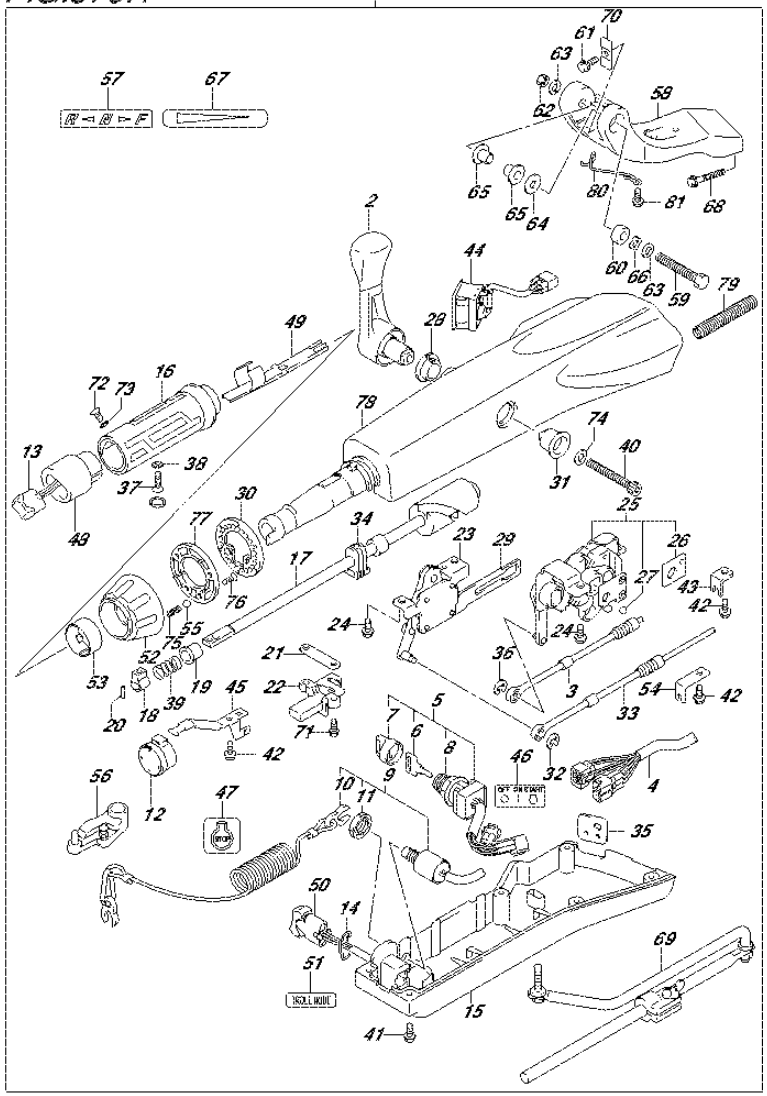

FIG.570H (5-E-6) OPT:TILLER HANDLE (DF60AVT E40)

REF NO.	PART NO.	DESCRIPTION	Q'TY	REMARKS
24	63251-87J00	.BOLT, SHIFT GEAR ASSY	4	
25	63260-88L00	.GEAR ASSY, SHIFT	1	
26	63272-87J00	..PLATE, BALL GUIDE	1	
27	63273-87J00	..BALL	1	
28	63262-87J00	.BUSH, SHIFT LEVER	1	
29	63271-87J00	.PLATE, LOCK	1	
30	63248-99J00	.PLATE, THROTTLE ADJ NOTCH	1	
31	63261-87J00	.BUSH, SHIFT GEAR	1	
32	63274-87J00	.E RING	1	
33	63610-88L00	.CABLE, THROTTLE	1	
34	37853-88L90	.GROMMET, PTT SWITCH LEAD	1	
35	63626-88L00	.GROMMET, WIRE HARNESS	1	
36	67292-87J00	.E RING	2	
37	09126-06015	.SCREW (6X23)	1	
38	09163-06001	.LOCK WASHER	1	
39	09440-12027	.SPRING	1	
40	21112-88L00	.BOLT SHIFT LEVER	1	
41	09125-05047	.SCREW (5X14)	6	
42	63611-88L00	.BOLT CLAMP BRACKET	3	
43	63612-87J00	.BRACKET, CLAMP	1	
44	34200-87L00	.TACHOMETER ASSY, WITH MONITOR	1	
45	36617-88L90	.CLAMP PLATE, MAIN HARNESS	1	
46	37112-88L90	.LABEL, IGNITION SWITCH	1	
47	37835-95D00	.LABEL, STOP	1	
48	37851-88L90	.BASE, PTT SWITCH	1	
49	37852-88L90	.HARNESS, GUIDE	1	
50	37861-87L10	.SWITCH, TROLLING CONTROL	1	
51	37864-88L90	.LABEL, TROLL MODE	1	
52	63244-99J00	.KNOB, THROTTLE ADJ	1	
53	63245-99J00	.BUSH, THROTTLE ADJ	1	
54	63612-88L10	.BRACKET, CLAMP SHIFT	1	
55	09260-10006	.BALL	1	
56	19120-88L11	.LEVER, THROTTLE	1	
57	21131-88L00	.MARK, CLUTCH SHIFT	1	

FIG.570H

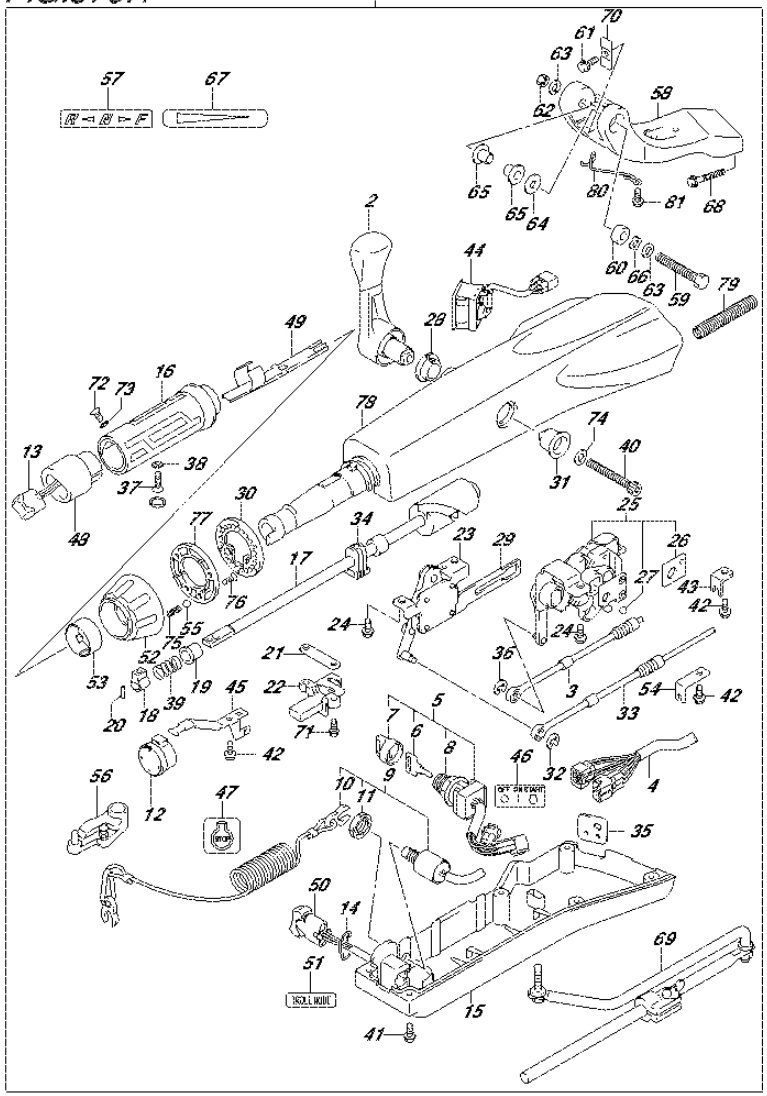

FIG.570H (5-E-7) OPT:TILLER HANDLE (DF60AVT E40)

REF NO.	PART NO.	DESCRIPTION	Q'TY	REMARKS
58	43761-88L01-0EP	.BRACKET, TILLER HANDLE (BLACK)	1	
59	43762-88L00	.BOLT TILLER HANDLE PIVOT	1	
60	43768-88L00	.SPACER, TILLER HANDLE	1	
61	09116-08137	.BOLT (8X22)	1	
62	09159-12014	.NUT	1	
63	09160-12066	.WASHER (12.5X22X2.5)	2	
64	09160-12124	.WASHER (12.5X32X1.5)	1	
65	63115-88L00	.BUSH, TILLER HANDLE	2	
66	09164-13010	.WASHER	1	
67	63215-93110	.MARK, HANDLE GRIP	1	
68	09116-10150	.BOLT (10X55)	2	
69	43770-99E03	.ADJUSTER ASSY, STEERING	1	
70	63132-88L00	.STOPPER, TILLER HANDLE	1	
71	63251-88L90	.BOLT	2	
72	37855-88L90	.SCREW, THROTTLE GRIP	1	
73	37854-88L90	.WASHER,THROTTLE GRIP	1	
74	63258-88L00	.WASHER	1	
75	09440-06037	.SPRING	1	
76	03522-05169	.SCREW	3	
77	63247-99J00	.PLATE, THROTTLE ADJ KNOB	1	
78	63111-88L00-0EP	.HOUSING, TILLER HANDLE (BLACK)	1	
79	33834-88L00	.TUBE, CABLE PROTECTOR	1	
80	65793-88L00	.HOLDER, FUEL HOSE	1	
81	09116-06237	.BOLT (6X15)	2	

FIG.575A

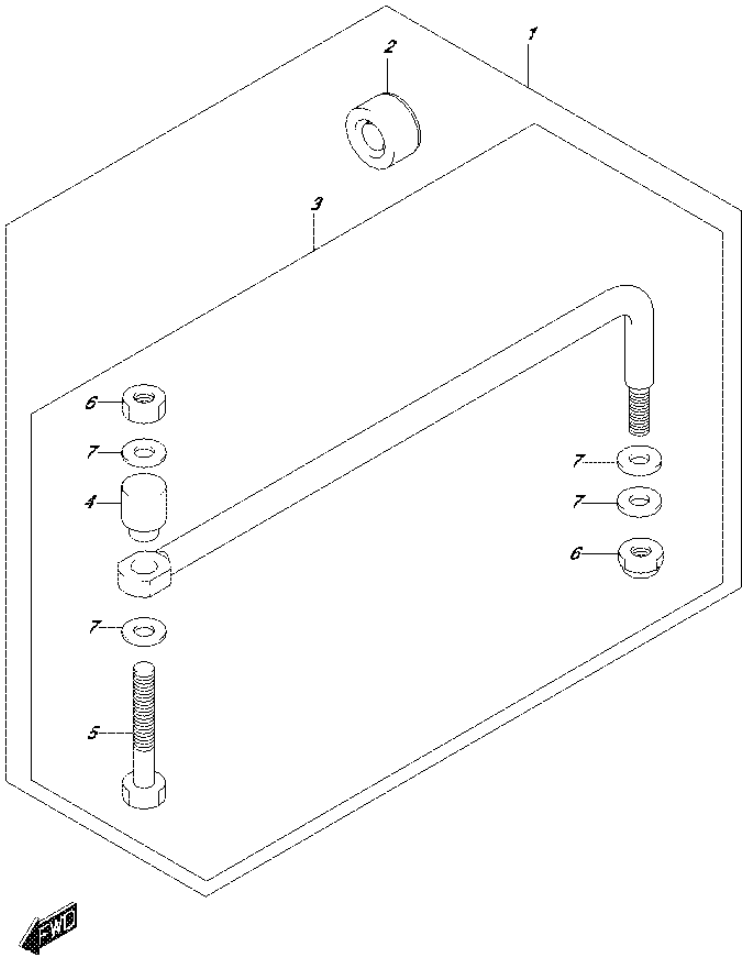

FIG.575A (5-E-8) OPT:DRAG LINK (DF40AQH E01)

REF NO.	PART NO.	DESCRIPTION	Q'TY	REMARKS
1	67700-93J00	LINK SET, DRAG	1	
2	41161-94400	.SEAL, STEERING CABLE	1	
3	67701-87J11	.LINK ASSY, DRAG	1	
4	67721-87J00	..SPACER	1	
5	67725-99E00	..BOLT, DRAG LINK	1	
6	67726-99E00	..NUT	2	
7	67728-99E00	..WASHER	4	

FIG.575B

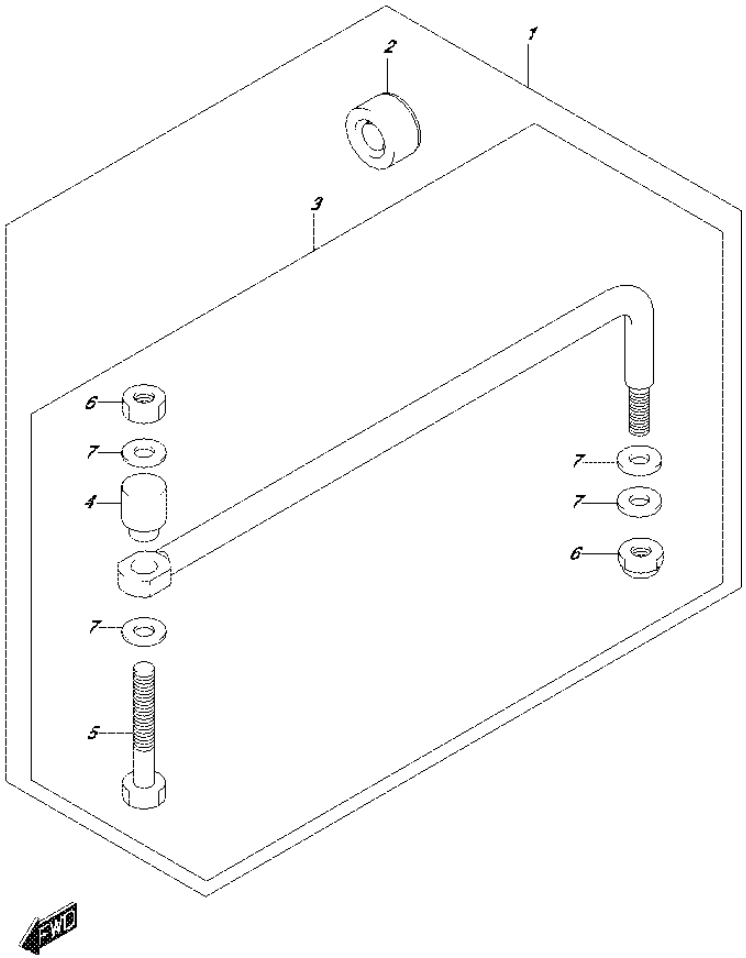

FIG.575B (5-E-9) OPT:DRAG LINK (DF40ATH E01)

REF NO.	PART NO.	DESCRIPTION	Q'TY	REMARKS
1	67700-93J00	LINK SET, DRAG	1	
2	41161-94400	.SEAL, STEERING CABLE	1	
3	67701-87J11	.LINK ASSY, DRAG	1	
4	67721-87J00	..SPACER	1	
5	67725-99E00	..BOLT, DRAG LINK	1	
6	67726-99E00	..NUT	2	
7	67728-99E00	..WASHER	4	

FIG.575C

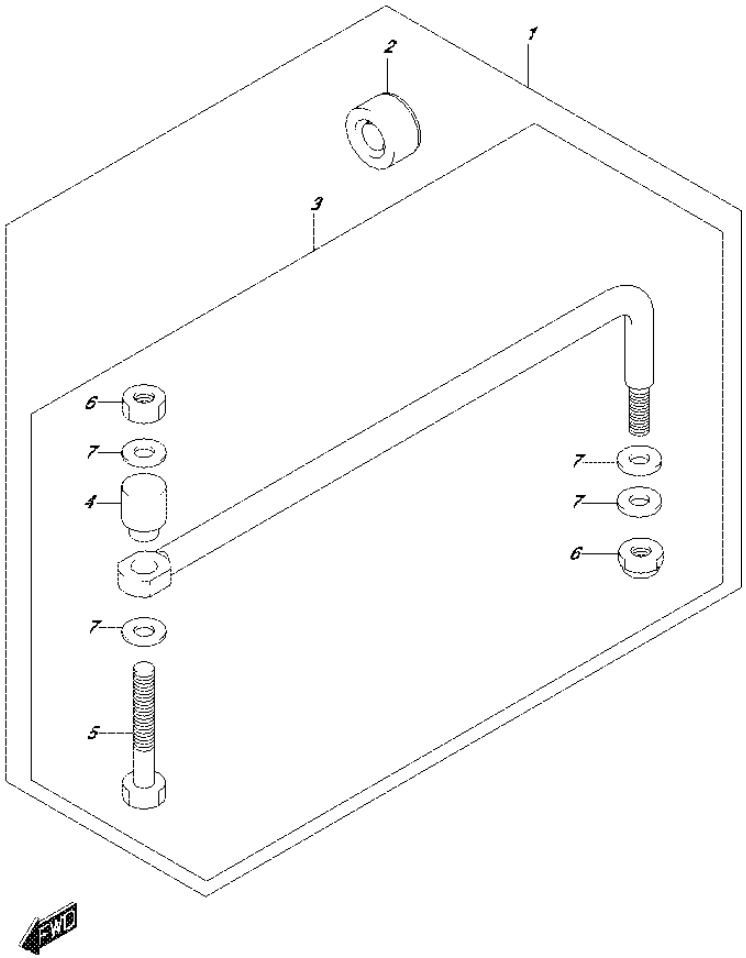

FIG.575C (5-E-10) OPT:DRAG LINK (DF50ATH E01)

REF NO.	PART NO.	DESCRIPTION	Q'TY	REMARKS
1	67700-93J00	LINK SET, DRAG	1	
2	41161-94400	.SEAL, STEERING CABLE	1	
3	67701-87J11	.LINK ASSY, DRAG	1	
4	67721-87J00	..SPACER	1	
5	67725-99E00	..BOLT, DRAG LINK	1	
6	67726-99E00	..NUT	2	
7	67728-99E00	..WASHER	4	

FIG.575D

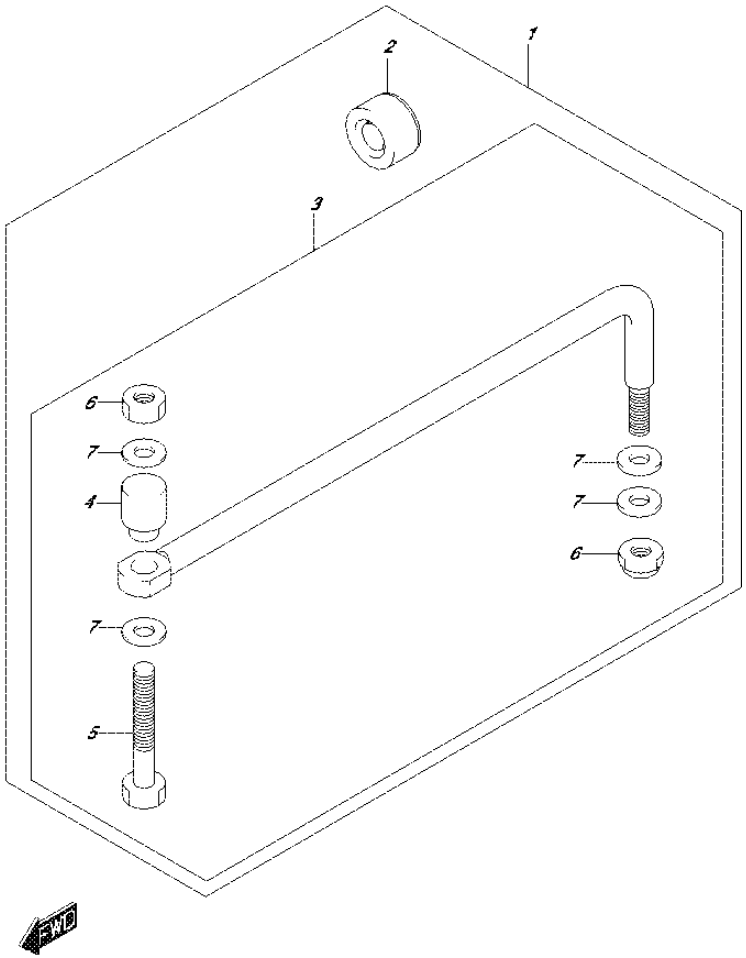

FIG.575D (5-E-11) OPT:DRAG LINK (DF60AQH E01)

REF NO.	PART NO.	DESCRIPTION	Q'TY	REMARKS
1	67700-93J00	LINK SET, DRAG	1	
2	41161-94400	.SEAL, STEERING CABLE	1	
3	67701-87J11	.LINK ASSY, DRAG	1	
4	67721-87J00	..SPACER	1	
5	67725-99E00	..BOLT, DRAG LINK	1	
6	67726-99E00	..NUT	2	
7	67728-99E00	..WASHER	4	

FIG.575E

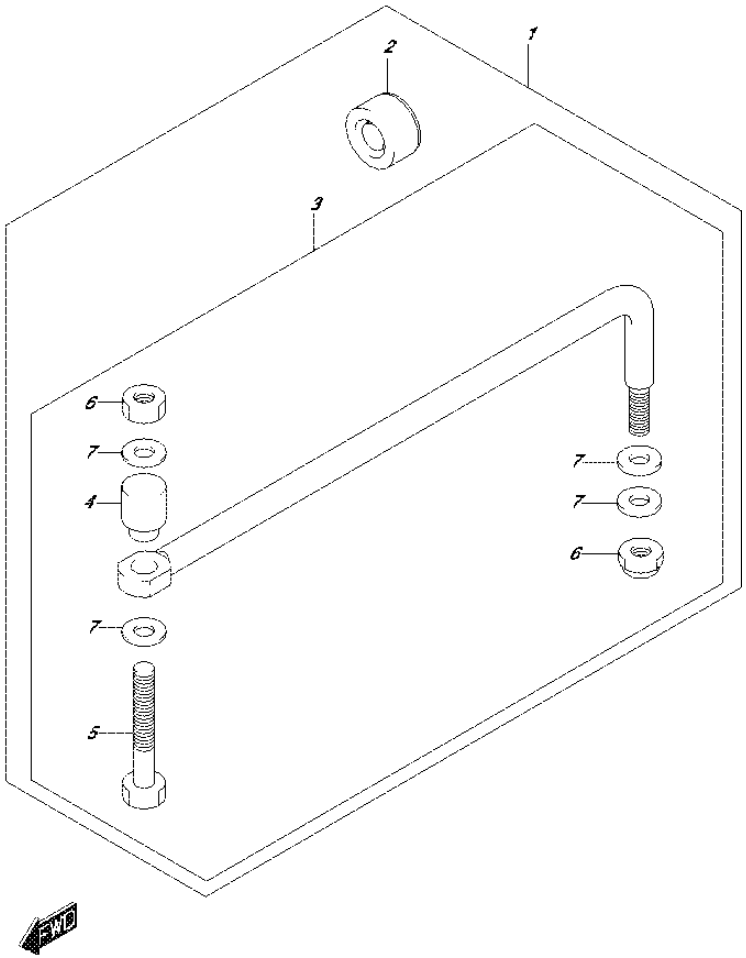

FIG.575E (5-E-12) OPT:DRAG LINK (DF60AQH E40)

REF NO.	PART NO.	DESCRIPTION	Q'TY	REMARKS
1	67700-93J00	LINK SET, DRAG	1	
2	41161-94400	.SEAL, STEERING CABLE	1	
3	67701-87J11	.LINK ASSY, DRAG	1	
4	67721-87J00	..SPACER	1	
5	67725-99E00	..BOLT, DRAG LINK	1	
6	67726-99E00	..NUT	2	
7	67728-99E00	..WASHER	4	

FIG.575F

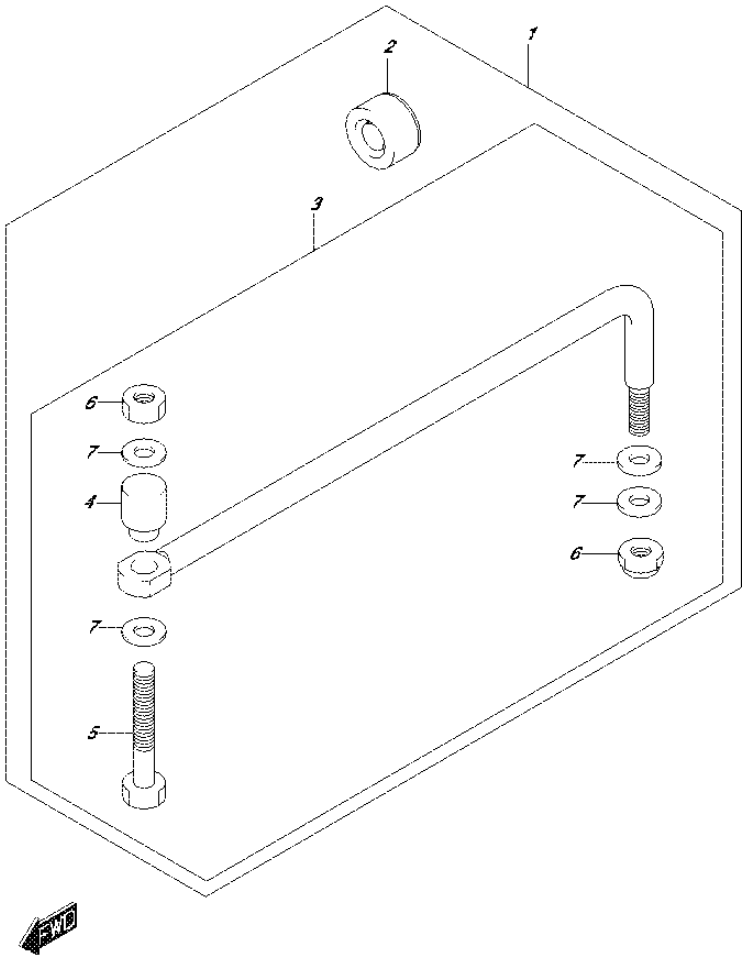

FIG.575F (5-E-13) OPT:DRAG LINK (DF60ATH E01)

REF NO.	PART NO.	DESCRIPTION	Q'TY	REMARKS
1	67700-93J00	LINK SET, DRAG	1	
2	41161-94400	.SEAL, STEERING CABLE	1	
3	67701-87J11	.LINK ASSY, DRAG	1	
4	67721-87J00	..SPACER	1	
5	67725-99E00	..BOLT, DRAG LINK	1	
6	67726-99E00	..NUT	2	
7	67728-99E00	..WASHER	4	

FIG.575G

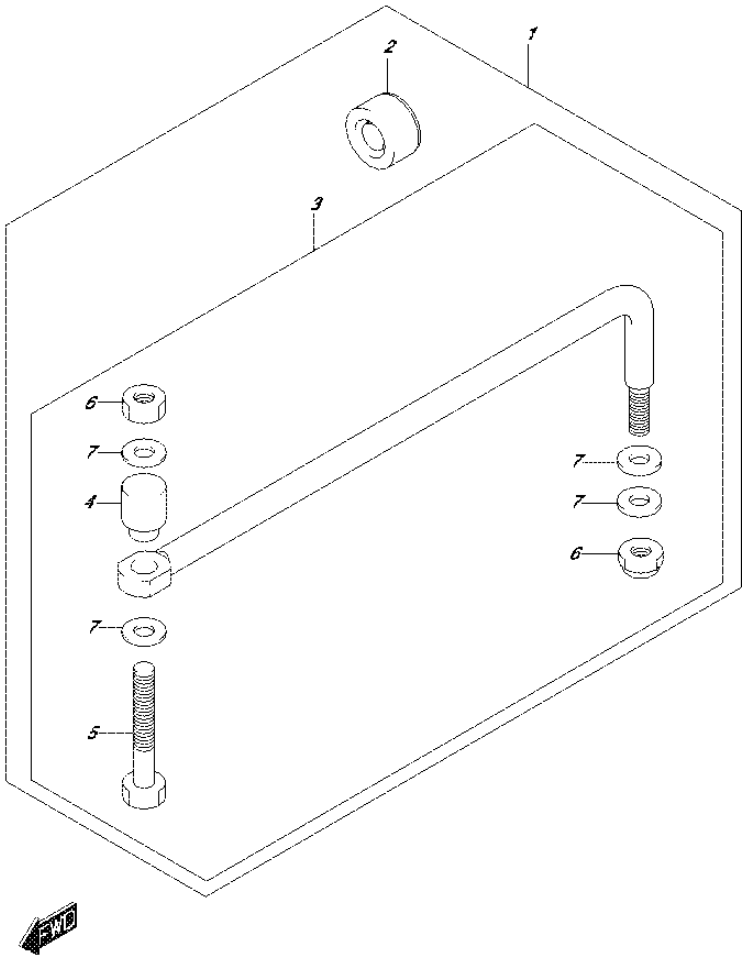

FIG.575G (5-E-14) OPT:DRAG LINK (DF60ATH E40)

REF NO.	PART NO.	DESCRIPTION	Q'TY	REMARKS
1	67700-93J00	LINK SET, DRAG	1	
2	41161-94400	.SEAL, STEERING CABLE	1	
3	67701-87J11	.LINK ASSY, DRAG	1	
4	67721-87J00	..SPACER	1	
5	67725-99E00	..BOLT, DRAG LINK	1	
6	67726-99E00	..NUT	2	
7	67728-99E00	..WASHER	4	

FIG.575H

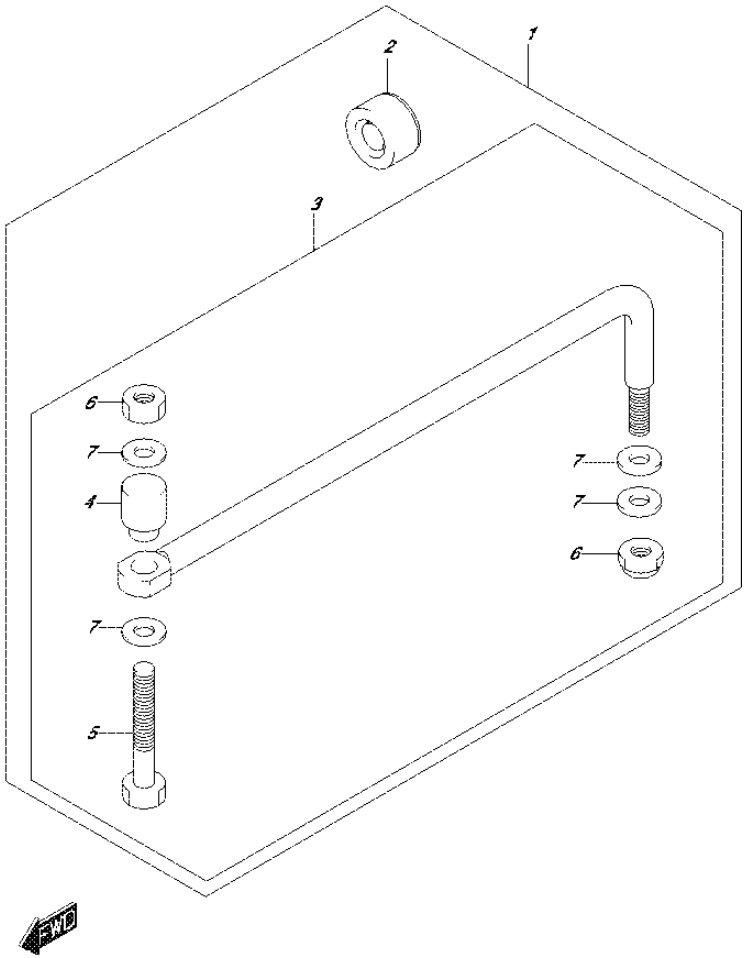

FIG.575H (5-E-15) OPT:DRAG LINK (DF50AVTH E01)

REF NO.	PART NO.	DESCRIPTION	Q'TY	REMARKS
1	67700-93J00	LINK SET, DRAG	1	
2	41161-94400	.SEAL, STEERING CABLE	1	
3	67701-87J11	.LINK ASSY, DRAG	1	
4	67721-87J00	..SPACER	1	
5	67725-99E00	..BOLT, DRAG LINK	1	
6	67726-99E00	..NUT	2	
7	67728-99E00	..WASHER	4	

FIG.575J

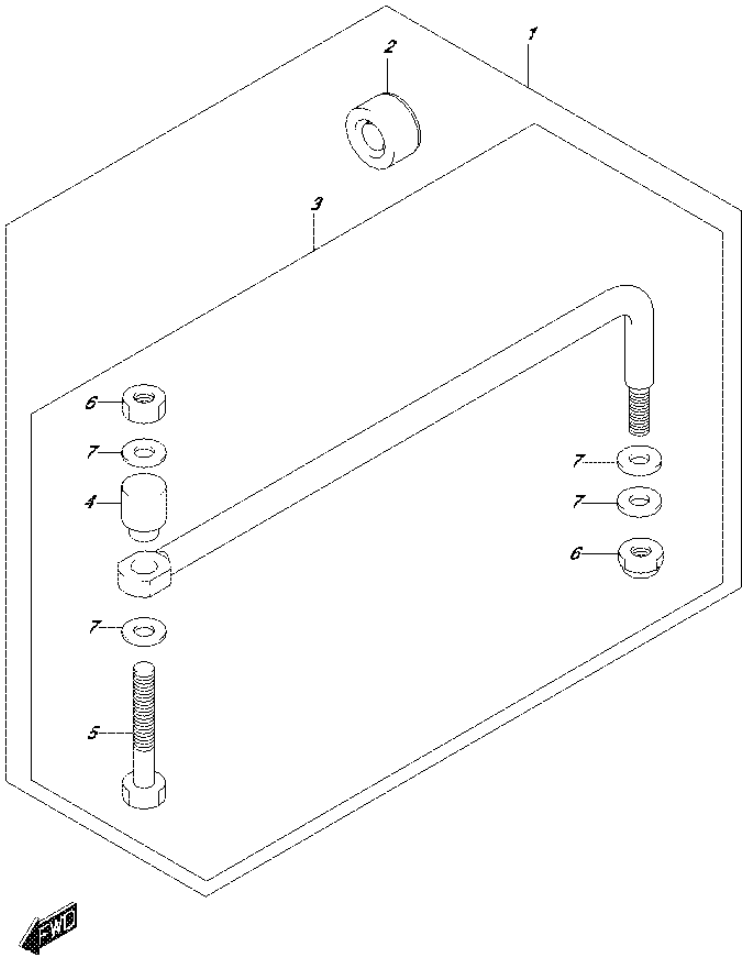

FIG.575J (5-F-2) OPT:DRAG LINK (DF60AVTH E01)

REF NO.	PART NO.	DESCRIPTION	Q'TY	REMARKS
1	67700-93J00	LINK SET, DRAG	1	
2	41161-94400	.SEAL, STEERING CABLE	1	
3	67701-87J11	.LINK ASSY, DRAG	1	
4	67721-87J00	..SPACER	1	
5	67725-99E00	..BOLT, DRAG LINK	1	
6	67726-99E00	..NUT	2	
7	67728-99E00	..WASHER	4	

FIG.575K

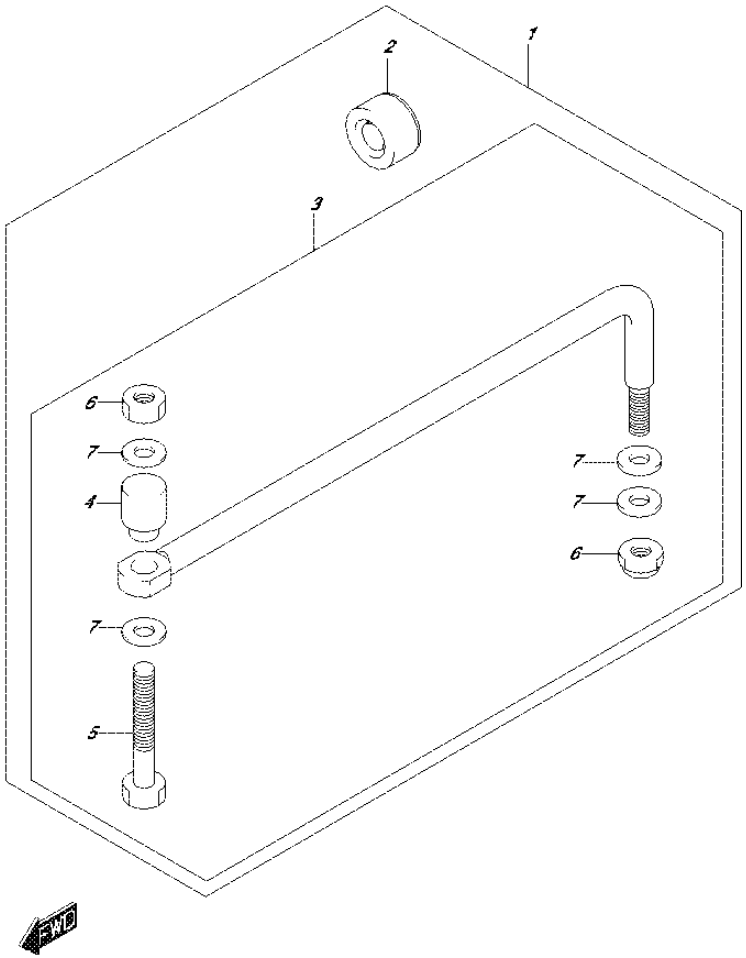

FIG.575K (5-F-3) OPT:DRAG LINK (DF60AVTH E40)

REF NO.	PART NO.	DESCRIPTION	Q'TY	REMARKS
1	67700-93J00	LINK SET, DRAG	1	
2	41161-94400	.SEAL, STEERING CABLE	1	
3	67701-87J11	.LINK ASSY, DRAG	1	
4	67721-87J00	..SPACER	1	
5	67725-99E00	..BOLT, DRAG LINK	1	
6	67726-99E00	..NUT	2	
7	67728-99E00	..WASHER	4	

DF60A_E01_016_575K
OPT:DRAG LINK

FIG.585A

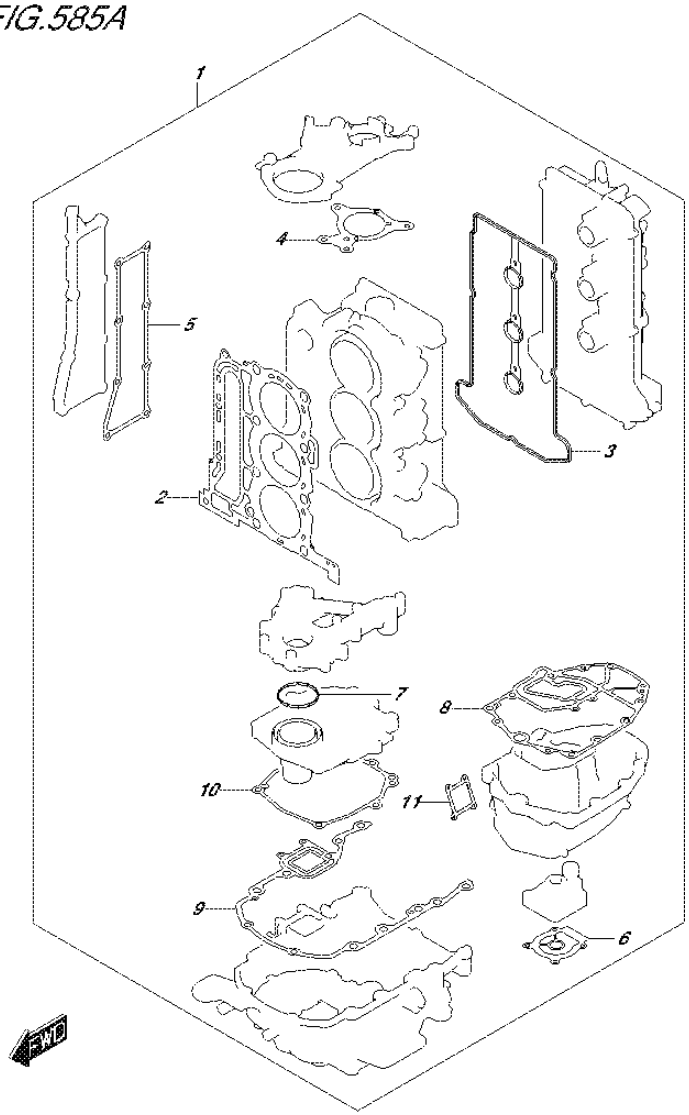

FIG.585A (5-F-4) OPT:GASKET SET

REF NO.	PART NO.	DESCRIPTION	Q'TY	REMARKS
1	11400-88870	GASKET SET	1	
2	11141-88L00	.GASKET, CYLINDER HEAD	1	
3	11189-88L00	.GASKET, CYLINDER HEAD COVER	1	
4	11413-88L00	.GASKET, UPPER OIL SEAL	1	
5	14151-88L00	.GASKET, EXHAUST COVER	1	
6	17472-96303	.GASKET, PUMP CASE UNDER	1	NOT AVAILABLE FOR AV ORDER 17472-87E10 FOR AV
7	11433-88L00	.GASKET, UNDER OIL SEAL	1	
8	11489-88L00	.GASKET, OIL PAN	1	
9	51211-88L00	.GASKET, ENGINE HOLDER	1	
10	51123-88L00	.GASKET, MOUNT CASE COVER	1	
11	11552-88L00	.GASKET, OIL PAN WTR JKT COV	1	

DF60A_E01_016_585A
OPT:GASKET SET

10000

PART NO.	FIG.NO.-REF.NO.
11100-88L00	111A-1
	111B-1
	111C-1
	111D-1
	111E-1
	111F-1
	111G-1
	111H-1
	111J-1
	111K-1
	111L-1
	111M-1
	111N-1
	111P-1
	111R-1
	111S-1
	111T-1
	111U-1
11112-88L00	113A-7
11115-73G01-001	111A-2
	111A-29
	111B-2
	111B-29
	111C-2
	111C-29
	111D-2
	111D-29
	111E-2
	111E-29
	111F-2
	111F-29
	111G-2
	111G-29
	111H-2
	111H-29
	111J-2
	111J-29
	111K-2
	111K-29
	111L-2
	111L-29
	111M-2
	111M-29
	111N-2
	111N-29

PART NO.	FIG.NO.-REF.NO.
	111P-2
	111P-29
	111R-2
	111R-29
	111S-2
	111S-29
	111T-2
	111T-29
	111U-2
	111U-29
11117-89J20	113A-4
11119-87J00	111A-10
	111B-10
	111C-10
	111D-10
	111E-10
	111F-10
	111G-10
	111H-10
	111J-10
	111K-10
	111L-10
	111M-10
	111N-10
	111P-10
	111R-10
	111S-10
	111T-10
	111U-10
11141-88L00	111A-11
	111B-11
	111C-11
	111D-11
	111E-11
	111F-11
	111G-11
	111H-11
	111J-11
	111K-11
	111L-11
	111M-11
	111N-11
	111P-11
	111R-11
	111S-11
	111T-11
	111U-11
	585A-2
11170-88L10	111A-16
	111B-16

PART NO.	FIG.NO.-REF.NO.
	111C-16
	111D-16
	111E-16
	111F-16
	111G-16
	111H-16
	111J-16
	111K-16
	111L-16
	111M-16
	111N-16
	111P-16
	111R-16
	111S-16
	111T-16
	111U-16
11173-88L00	111A-20
	111B-20
	111C-20
	111D-20
	111E-20
	111F-20
	111G-20
	111H-20
	111J-20
	111K-20
	111L-20
	111M-20
	111N-20
	111P-20
	111R-20
	111S-20
	111T-20
	111U-20
11174-88L00	111A-22
	111B-22
	111C-22
	111D-22
	111E-22
	111F-22
	111G-22
	111H-22
	111J-22
	111K-22
	111L-22
	111M-22
	111N-22
	111P-22
	111R-22
	111S-22

PART NO.	FIG.NO.-REF.NO.
	111T-22
	111U-22
11189-88L00	111A-17
	111B-17
	111C-17
	111D-17
	111E-17
	111F-17
	111G-17
	111H-17
	111J-17
	111K-17
	111L-17
	111M-17
	111N-17
	111P-17
	111R-17
	111S-17
	111T-17
	111U-17
	585A-3
11194-88L10	111A-26
	111B-26
	111C-26
	111D-26
	111E-26
	111F-26
	111G-26
	111H-26
	111J-26
	111K-26
	111L-26
	111M-26
	111N-26
	111P-26
	111R-26
	111S-26
	111T-26
	111U-26
11196-88L00	162A-8
	162B-8
	162C-8
	162D-8
	162E-8
	162F-8
	162G-8
	162H-8
	162J-8
	162K-8
	162L-8

PART NO.	FIG.NO.-REF.NO.
	162M-8
	162N-8
	162P-8
	162R-8
	162S-8
	162T-8
	162U-8
11261-93J00	111A-5
	111B-5
	111C-5
	111D-5
	111E-5
	111F-5
	111G-5
	111H-5
	111J-5
	111K-5
	111L-5
	111M-5
	111N-5
	111P-5
	111R-5
	111S-5
	111T-5
	111U-5
11291-88L00	113A-1
11301-88L10	113A-3
11382-99E00	111A-14
	111B-14
	111C-14
	111D-14
	111E-14
	111F-14
	111G-14
	111H-14
	111J-14
	111K-14
	111L-14
	111M-14
	111N-14
	111P-14
	111R-14
	111S-14
	111T-14
	111U-14
11400-88870	585A-1
11411-88L00	136A-6
11413-88L00	136A-7
	585A-4
11433-88L00	175A-1

PART NO.	FIG.NO.-REF.NO.
	585A-7
11489-88L00	180A-1
	180B-1
	180C-1
	180D-1
	180E-1
	180F-1
	180G-1
	180H-1
	180J-1
	180K-1
	180L-1
	180M-1
	180N-1
	180P-1
	180R-1
	180S-1
	180T-1
	180U-1
	585A-8
11501-88L01-0EP	180A-2-1
	180B-2
	180C-2
	180D-2-1
	180E-2-1
	180F-2
	180G-2-1
	180H-2-1
	180J-2
	180K-2
	180L-2
	180M-2
	180N-2
	180P-2
	180R-2
	180S-2
	180T-2
	180U-2
11501-88L01-Y5S	180A-2-2
	180D-2-2
	180E-2-2
	180G-2-2
	180H-2-2
11510-88L00	136A-1
11514-88L00	136A-5
11543-88L00	180A-11
	180B-11
	180C-11
	180D-11
	180E-11

PART NO.	FIG.NO.-REF.NO.	PART NO.	FIG.NO.-REF.NO.	PART NO.	FIG.NO.-REF.NO.
	180F-11		180R-7	12892-73G01-246	121A-8-15
	180G-11		180S-7	12892-73G01-248	121A-8-16
	180H-11		180T-7	12892-73G01-250	121A-8-17
	180J-11		180U-7	12892-73G01-252	121A-8-18
	180K-11		585A-11	12892-73G01-254	121A-8-19
	180L-11	12100-51810-0A0	116A-8-1	12892-73G01-256	121A-8-20
	180M-11	12100-51810-0B0	116A-8-2	12892-73G01-258	121A-8-21
	180N-11	12100-51810-0C0	116A-8-3	12892-73G01-260	121A-8-22
	180P-11	12100-51810-0D0	116A-8-4	12892-73G01-262	121A-8-23
	180R-11	12100-51810-0E0	116A-8-5	12892-73G01-264	121A-8-24
	180S-11	12100-88L00-050	116A-13	12892-73G01-266	121A-8-25
	180T-11	12111-88L00	116A-1	12892-73G01-268	121A-8-26
	180U-11	12140-88L00	116A-2	12892-73G01-270	121A-8-27
11551-88L00-0EP	180A-6-1	12140-88L00-050	116A-14	12892-73G01-272	121A-8-28
	180B-6	12151-54A50	116A-3	12892-73G01-274	121A-8-29
	180C-6	12160-88L01	116A-5	12892-73G01-276	121A-8-30
	180D-6-1	12163-69J00	116A-6	12892-73G01-278	121A-8-31
	180E-6-1	12220-88L00	116A-9	12892-73G01-280	121A-8-32
	180F-6	12281-87J00	116A-12	12892-73G01-282	121A-8-33
	180G-6-1	12340-75F00-0C0	116A-10-3	12892-73G01-284	121A-8-34
	180H-6-1	12340-75F00-0D0	116A-10-4	12892-73G01-286	121A-8-35
	180J-6	12340-75F00-0E0	116A-10-5	12892-73G01-288	121A-8-36
	180K-6	12340-75FA0-0A0	116A-10-1	12892-73G01-290	121A-8-37
	180L-6	12340-75FA0-0B0	116A-10-2	12892-73G01-292	121A-8-38
	180M-6	12710-88L00	121A-1	12892-73G01-294	121A-8-39
	180N-6	12720-88L00	121A-2	12892-73G01-296	121A-8-40
	180P-6	12741-88L00	121A-3	12892-73G01-298	121A-8-41
	180R-6	12761-88L00	119A-1	12892-73G01-300	121A-8-42
	180S-6	12771-87J00	119A-2	12911-88L00	121A-9
	180T-6	12776-85FA0	119A-3	12915-73G20	121A-10
	180U-6	12811-88L00	119A-4	12921-87J10	121A-11
11551-88L00-Y5S	180A-6-2	12812-73G10	119A-7	12931-78G00	121A-12
	180D-6-2	12813-73G00	119A-8	12932-24400	121A-13
	180E-6-2	12821-88L00	119A-11	12933-51E00	121A-14
	180G-6-2	12831-90J02	119A-9	13110-88L00	124A-1
	180H-6-2	12891-73G01	121A-7		124B-1
11552-88L00	180A-7	12892-73G01-218	121A-8-1		124C-1
	180B-7	12892-73G01-220	121A-8-2		124D-1
	180C-7	12892-73G01-222	121A-8-3		124E-1
	180D-7	12892-73G01-224	121A-8-4		124F-1
	180E-7	12892-73G01-226	121A-8-5		124G-1
	180F-7	12892-73G01-228	121A-8-6		124H-1
	180G-7	12892-73G01-230	121A-8-7		124J-1
	180H-7	12892-73G01-232	121A-8-8		124K-1
	180J-7	12892-73G01-234	121A-8-9		124L-1
	180K-7	12892-73G01-236	121A-8-10		124M-1
	180L-7	12892-73G01-238	121A-8-11		124N-1
	180M-7	12892-73G01-240	121A-8-12		124P-1
	180N-7	12892-73G01-242	121A-8-13		124R-1
	180P-7	12892-73G01-244	121A-8-14		124S-1

PART NO.	FIG.NO.-REF.NO.	PART NO.	FIG.NO.-REF.NO.	PART NO.	FIG.NO.-REF.NO.
	124T-1		163N-1		163J-6
	124U-1		163P-1		163K-6
13119-88L00	124A-2		163R-1		163L-6
	124B-2		163S-1		163M-6
	124C-2		163T-1		163N-6
	124D-2		163U-1		163P-6
	124E-2	13315-88L00	163A-2		163R-6
	124F-2		163B-2		163S-6
	124G-2		163C-2		163T-6
	124H-2		163D-2		163U-6
	124J-2		163E-2	13614-89J00	143H-15
	124K-2		163F-2		143K-15
	124L-2		163G-2		143M-15
	124M-2		163H-2		143S-15
	124N-2		163J-2		143U-15
	124P-2		163K-2	13614-93J00	143H-16
	124R-2		163L-2		143K-16
	124S-2		163M-2		143M-16
	124T-2		163N-2		143S-16
	124U-2		163P-2		143U-16
13125-88L00	124A-3		163R-2	13810-88L00	124A-10
	124B-3		163S-2		124B-10
	124C-3		163T-2		124C-10
	124D-3		163U-2		124D-10
	124E-3	13370-88L00	143A-2		124E-10
	124F-3		143B-2		124F-10
	124G-3		143C-2		124G-10
	124H-3		143D-2		124H-10
	124J-3		143E-2		124J-10
	124K-3		143F-2		124K-10
	124L-3		143G-2		124L-10
	124M-3		143J-2		124M-10
	124N-3		143L-2		124N-10
	124P-3		143N-2		124P-10
	124R-3		143P-2		124R-10
	124S-3		143R-2		124S-10
	124T-3		143T-2		124T-10
	124U-3	13370-88L10	143H-2		124U-10
13300-88L01	163A-1		143K-2	13813-88L00	124D-11
	163B-1		143M-2		124G-11
	163C-1		143S-2		124H-11
	163D-1		143U-2		124J-11
	163E-1	13510-88L00	163A-6		124K-11
	163F-1		163B-6		124L-11
	163G-1		163C-6		124M-11
	163H-1		163D-6		124R-11
	163J-1		163E-6		124S-11
	163K-1		163F-6		124T-11
	163L-1		163G-6		124U-11
	163M-1		163H-6	13815-88L00	163D-12

PART NO.	FIG.NO.-REF.NO.
13820-88L00	124A-11
	124B-11
	124C-11
13820-88L10	124E-11
	124F-11
	124N-11
	124P-11
14141-88L00	124A-13
	124B-13
	124C-13
	124D-13
	124E-13
	124F-13
	124G-13
	124H-13
	124J-13
	124K-13
	124L-13
	124M-13
	124N-13
	124P-13
	124R-13
	124S-13
	124T-13
	124U-13
14151-88L00	124A-14
	124B-14
	124C-14
	124D-14
	124E-14
	124F-14
	124G-14
	124H-14
	124J-14
	124K-14
	124L-14
	124M-14
	124N-14
	124P-14
	124R-14
	124S-14
	124T-14
	124U-14
	585A-5
15100-90J11	146A-1
15191-88L10	146A-10
15192-88L20	146A-11
15197-88L00	146A-15
15200-88L00	143A-3
	143B-3

PART NO.	FIG.NO.-REF.NO.
	143C-3
	143D-3
	143E-3
	143F-3
	143G-3
	143J-3
	143L-3
	143N-3
	143P-3
	143R-3
	143T-3
15200-88L10	143H-3
	143K-3
	143M-3
	143S-3
	143U-3
15410-88L00	146A-4
15419-87J00	146A-5
15421-88L00	146A-8
15422-96J00	146A-7
15600-88L02	143A-1
	143B-1
	143C-1
	143D-1
	143E-1
	143F-1
	143G-1
	143J-1
	143L-1
	143N-1
	143P-1
	143R-1
	143T-1
15600-88L13	143H-1
	143K-1
	143M-1
	143S-1
	143U-1
15612-88L00	143A-21
	143B-21
	143C-21
	143D-21
	143E-21
	143F-21
	143G-21
	143H-21
	143J-21
	143K-21
	143L-21
	143M-21

PART NO.	FIG.NO.-REF.NO.
	143N-21
	143P-21
	143R-21
	143S-21
	143T-21
	143U-21
15613-88L00	143A-22
	143B-22
	143C-22
	143D-22
	143E-22
	143F-22
	143G-22
	143H-22
	143J-22
	143K-22
	143L-22
	143M-22
	143N-22
	143P-22
	143R-22
	143S-22
	143T-22
	143U-22
15613-92J00	143A-23
	143B-23
	143C-23
	143D-23
	143E-23
	143F-23
	143G-23
	143H-23
	143J-23
	143K-23
	143L-23
	143M-23
	143N-23
	143P-23
	143R-23
	143S-23
	143T-23
	143U-23
15614-88L00	143A-24
	143B-24
	143C-24
	143D-24
	143E-24
	143F-24
	143G-24
	143H-24

PART NO.	FIG.NO.-REF.NO.
	143J-24
	143K-24
	143L-24
	143M-24
	143N-24
	143P-24
	143R-24
	143S-24
	143T-24
	143U-24
15626-88L00	143A-4
	143B-4
	143C-4
	143D-4
	143E-4
	143F-4
	143G-4
	143J-4
	143L-4
	143N-4
	143P-4
	143R-4
	143T-4
15626-88L10	143H-4
	143K-4
	143M-4
	143S-4
	143U-4
15628-99E00	143A-5
	143B-5
	143C-5
	143D-5
	143E-5
	143F-5
	143G-5
	143H-5
	143J-5
	143K-5
	143L-5
	143M-5
	143N-5
	143P-5
	143R-5
	143S-5
	143T-5
	143U-5
15629-99E10	143A-6
	143B-6
	143C-6
	143D-6

PART NO.	FIG.NO.-REF.NO.
	143E-6
	143F-6
	143G-6
	143H-6
	143J-6
	143K-6
	143L-6
	143M-6
	143N-6
	143P-6
	143R-6
	143S-6
	143T-6
	143U-6
15641-88L00	143A-7
	143B-7
	143C-7
	143D-7
	143E-7
	143F-7
	143G-7
	143J-7
	143L-7
	143N-7
	143P-7
	143R-7
	143T-7
15641-88L10	143H-7
	143K-7
	143M-7
	143S-7
	143U-7
15641-88L20	143A-18
	143B-18
	143C-18
	143D-18
	143E-18
	143F-18
	143G-18
	143J-18
	143L-18
	143N-18
	143P-18
	143R-18
	143T-18
15641-88L31	143H-18
	143K-18
	143M-18
	143S-18
	143U-18

PART NO.	FIG.NO.-REF.NO.
15641-88L40	143A-19
	143B-19
	143C-19
	143D-19
	143E-19
	143F-19
	143G-19
	143J-19
	143L-19
	143N-19
	143P-19
	143R-19
	143T-19
15641-88L51	143H-19
	143K-19
	143M-19
	143S-19
	143U-19
15642-88L00	143A-8
	143B-8
	143C-8
	143D-8
	143E-8
	143F-8
	143G-8
	143H-8
	143J-8
	143K-8
	143L-8
	143M-8
	143N-8
	143P-8
	143R-8
	143S-8
	143T-8
	143U-8
15642-88L10	143A-20
	143B-20
	143C-20
	143D-20
	143E-20
	143F-20
	143G-20
	143H-20
	143J-20
	143K-20
	143L-20
	143M-20
	143N-20
	143P-20

PART NO.	FIG.NO.-REF.NO.	PART NO.	FIG.NO.-REF.NO.	PART NO.	FIG.NO.-REF.NO.
	143R-20		143L-14		144G-7
	143S-20		143M-14		144H-7
	143T-20		143N-14		144J-7
	143U-20		143P-14		144K-7
15643-88L00	143A-17		143R-14		144L-7
	143B-17		143S-14		144M-7
	143C-17		143T-14		144N-7
	143D-17		143U-14		144P-7
	143E-17	15650-99E00	143A-9		144R-7
	143F-17		143B-9		144S-7
	143G-17		143C-9		144T-7
	143H-17		143D-9		144U-7
	143J-17		143E-9	15683-87J00	143A-11
	143K-17		143F-9		143B-11
	143L-17		143G-9		143C-11
	143M-17		143H-9		143D-11
	143N-17		143J-9		143E-11
	143P-17		143K-9		143F-11
	143R-17		143L-9		143G-11
	143S-17		143M-9		143H-11
	143T-17		143N-9		143J-11
	143U-17		143P-9		143K-11
15644-88L00	143A-13		143R-9		143L-11
	143B-13		143S-9		143M-11
	143C-13		143T-9		143N-11
	143D-13		143U-9		143P-11
	143E-13	15654-88L00	143A-10		143R-11
	143F-13		143B-10		143S-11
	143G-13		143C-10		143T-11
	143J-13		143D-10		143U-11
	143L-13		143E-10	15710-85K00	144A-1
	143N-13		143F-10		144B-1
	143P-13		143G-10		144C-1
	143R-13		143H-10		144D-1
	143T-13		143J-10		144E-1
15644-88L10	143H-13		143K-10		144F-1
	143K-13		143L-10		144G-1
	143M-13		143M-10		144H-1
	143S-13		143N-10		144J-1
	143U-13		143P-10		144K-1
15645-88L00	143A-14		143R-10		144L-1
	143B-14		143S-10		144M-1
	143C-14		143T-10		144N-1
	143D-14		143U-10		144P-1
	143E-14	15681-88L10	144A-7		144R-1
	143F-14		144B-7		144S-1
	143G-14		144C-7		144T-1
	143H-14		144D-7		144U-1
	143J-14		144E-7	15716-65DT0	144A-2
	143K-14		144F-7		144B-2

PART NO.	FIG.NO.-REF.NO.	PART NO.	FIG.NO.-REF.NO.	PART NO.	FIG.NO.-REF.NO.
	144C-2		143T-12		160J-21
	144D-2		143U-12		160K-21
	144E-2	16400-88L00	175A-2		160L-21
	144F-2	16510-87J00	175A-9		160M-21
	144G-2	16519-87L00	175A-8	17400-99E10	160N-20
	144H-2	16520-88L00	175A-5		160P-20
	144J-2	16910-88L00	180A-14		160R-20
	144K-2		180B-14		160S-19
	144L-2		180C-14		160T-20
	144M-2		180D-14		160U-19
	144N-2		180E-14	17410-88L00	160A-1
	144P-2		180F-14		160B-1
	144R-2		180G-14		160C-1
	144S-2		180H-14		160D-1
	144T-2		180J-14		160E-1
	144U-2		180K-14		160F-1
15750-88L10	144A-4		180L-14		160G-1
	144B-4		180M-14		160H-1
	144C-4		180N-14		160J-1
	144D-4		180P-14		160K-1
	144E-4		180R-14		160L-1
	144F-4		180S-14		160M-1
	144G-4		180T-14	17410-99E10	160N-1
	144J-4		180U-14		160P-1
	144L-4	16930-88L00	180A-15		160R-1
	144N-4		180B-15		160S-1
	144P-4		180C-15		160T-1
	144R-4		180D-15		160U-1
	144T-4		180E-15	17413-95J00	160A-2
15750-88L20	144H-4		180F-15		160B-2
	144K-4		180G-15		160C-2
	144M-4		180H-15		160D-2
	144S-4		180J-15		160E-2
	144U-4		180K-15		160F-2
15760-88L00	143A-12		180L-15		160G-2
	143B-12		180M-15		160J-2
	143C-12		180N-15		160L-2
	143D-12		180P-15	17413-95J10	160H-2
	143E-12		180R-15		160K-2
	143F-12		180S-15		160M-2
	143G-12		180T-15	17413-99E11	160N-18
	143H-12		180U-15		160P-18
	143J-12	17400-88L00	160A-21		160R-18
	143K-12		160B-21		160T-18
	143L-12		160C-21	17413-99E21	160S-17
	143M-12		160D-21		160U-17
	143N-12		160E-21	17416-95J00	160A-3
	143P-12		160F-21		160B-3
	143R-12		160G-21		160C-3
	143S-12		160H-21		160D-3

PART NO.	FIG.NO.-REF.NO.
	160E-3
	160F-3
	160G-3
	160H-3
	160J-3
	160K-3
	160L-3
	160M-3
17416-99E10	160N-19
	160P-19
	160R-19
	160S-18
	160T-19
	160U-18
17461-87E12	160N-2
	160P-2
	160R-2
	160S-2
	160T-2
	160U-2
17461-96312	160A-9
	160B-9
	160C-9
	160D-9
	160E-9
	160F-9
	160G-9
	160H-9
	160J-9
	160K-9
	160L-9
	160M-9
17471-95J01	160A-10
	160B-10
	160C-10
	160D-10
	160E-10
	160F-10
	160G-10
	160J-10
	160L-10
17471-95J10	160H-10
	160K-10
	160M-10
17471-99E00	160N-3
	160P-3
	160R-3
	160T-3
17471-99E10	160S-3
	160U-3

PART NO.	FIG.NO.-REF.NO.
17472-87E10	160N-4
	160P-4
	160R-4
	160S-4
	160T-4
	160U-4
17472-96303	160A-11
	160B-11
	160C-11
	160D-11
	160E-11
	160F-11
	160G-11
	160H-11
	160J-11
	160K-11
	160L-11
	160M-11
	585A-6
17560-88L00	160A-12-1
	160D-12-1
	160E-12-1
	160G-12-1
17560-88L10	160A-12-2
	160B-12
	160C-12
	160D-12-2
	160E-12-2
	160F-12
	160G-12-2
	160H-12-1
	160J-12-1
	160K-12-1
	160L-12-1
	160M-12-1
17560-88L20	160G-12-3
	160H-12-2
	160J-12-2
	160K-12-2
	160L-12-2
	160M-12-2
17560-88L30	160N-5
	160P-5
	160R-5-1
	160S-5-1
	160T-5-1
	160U-5-1
17560-88L40	160R-5-2
	160S-5-2
	160T-5-2

PART NO.	FIG.NO.-REF.NO.
	160U-5-2
17562-87L00	160A-13
	160A-14
	160B-13
	160B-14
	160C-13
	160C-14
	160D-13
	160D-14
	160E-13
	160E-14
	160F-13
	160F-14
	160G-13
	160G-14
	160H-13
	160H-14
	160J-13
	160J-14
	160K-13
	160K-14
	160L-13
	160L-14
	160M-13
	160M-14
	160N-6
	160N-7
	160P-6
	160P-7
	160R-6
	160R-7
	160S-6
	160S-7
	160T-6
	160T-7
	160U-6
	160U-7
17564-87D00	160N-8
	160P-8
	160R-8
	160S-8
	160T-8
	160U-8
17564-88L00	160A-4
	160B-4
	160C-4
	160D-4
	160E-4
	160F-4
	160G-4

PART NO.	FIG.NO.-REF.NO.
	160H-4
	160J-4
	160K-4
	160L-4
	160M-4
17611-90J00-0EP	162A-1-1
	162B-1
	162C-1
	162D-1-1
	162E-1-1
	162F-1
	162G-1-1
	162H-1-1
	162J-1
	162K-1
	162L-1
	162M-1
	162N-1
	162P-1
	162R-1
	162S-1
	162T-1
	162U-1
17611-90J00-Y5S	162A-1-2
	162D-1-2
	162E-1-2
	162G-1-2
	162H-1-2
17631-90J00	160N-9
	160P-9
	160R-9
	160S-9
	160T-9
	160U-9
17631-96320	160A-16
	160B-16
	160C-16
	160D-16
	160E-16
	160F-16
	160G-16
	160H-16
	160J-16
	160K-16
	160L-16
	160M-16
17632-90J00	160N-10
	160P-10
	160R-10
	160S-10

PART NO.	FIG.NO.-REF.NO.
	160T-10
	160U-10
17635-87E00	160A-18-1
	160B-18-1
	160C-18-1
	160D-18-1
	160E-18-1
	160F-18-1
	160G-18-1
	160H-18-1
	160J-18-1
	160K-18-1
	160L-18-1
	160M-18-1
17635-87E10	160A-18-2
	160B-18-2
	160C-18-2
	160D-18-2
	160E-18-2
	160F-18-2
	160G-18-2
	160H-18-2
	160J-18-2
	160K-18-2
	160L-18-2
	160M-18-2
	160N-21
	160P-21
	160R-21
	160S-20
	160T-21
	160U-20
17635-90J00	160N-11
	160P-11
	160R-11
	160S-11
	160T-11
	160U-11
17660-99E01	162A-2
	162B-2
	162C-2
	162D-2
	162E-2
	162F-2
	162G-2
	162H-2
	162J-2
	162K-2
	162L-2
	162M-2

PART NO.	FIG.NO.-REF.NO.
	162N-2
	162P-2
	162R-2
	162S-2
	162T-2
	162U-2
17670-93953	162A-5
	162B-5
	162C-5
	162D-5
	162E-5
	162F-5
	162G-5
	162H-5
	162J-5
	162K-5
	162L-5
	162M-5
	162N-5
	162P-5
	162R-5
	162S-5
	162T-5
	162U-5
17681-88L00	162A-6
	162B-6
	162C-6
	162D-6
	162E-6
	162F-6
	162G-6
	162H-6
	162J-6
	162K-6
	162L-6
	162M-6
	162N-6
	162P-6
	162R-6
	162S-6
	162T-6
	162U-6
17712-88L00	162A-11
	162B-11
	162C-11
	162D-11
	162E-11
	162F-11
	162G-11
	162H-11

PART NO.	FIG.NO.-REF.NO.	PART NO.	FIG.NO.-REF.NO.	PART NO.	FIG.NO.-REF.NO.
	162J-11		420E-20	18498-88L10	143A-31
	162K-11		420F-20		143B-31
	162L-11		420G-20		143C-31
	162M-11		420H-20		143D-31
	162N-11		420J-20		143E-31
	162P-11		420K-20		143F-31
	162R-11		420L-20		143G-31
	162S-11		420M-20		143H-31
	162T-11		420N-21		143J-31
	162U-11		420P-21		143K-31
17913-93J00	180A-9		420R-21		143L-31
	180B-9		420S-21		143M-31
	180C-9		420T-21		143N-31
	180D-9		420U-21		143P-31
	180E-9	18137-88L01	124A-8		143R-31
	180F-9		124B-8		143S-31
	180G-9		124C-8		143T-31
	180H-9		124D-8		143U-31
	180J-9		124E-8	18498-94J20	162A-10
	180K-9		124F-8		162B-10
	180L-9		124G-8		162C-10
	180M-9		124H-8		162D-10
	180N-9		124J-8		162E-10
	180P-9		124K-8		162F-10
	180R-9		124L-8		162G-10
	180S-9		124M-8		162H-10
	180T-9		124N-8		162J-10
	180U-9		124P-8		162K-10
17914-93J00	180A-10		124R-8		162L-10
	180B-10		124S-8		162M-10
	180C-10		124T-8		162N-10
	180D-10		124U-8		162P-10
	180E-10	18210-88L00	420A-17		162R-10
	180F-10		420B-17		162S-10
	180G-10		420C-17		162T-10
	180H-10		420D-17		162U-10
	180J-10		420E-17	18498-96J20	146A-14
	180K-10		420F-17	18498-99E10	146A-13
	180L-10		420G-17	18498-99EA0	507A-6
	180M-10		420H-17	19120-88L01	163A-7
	180N-10		420J-17		163D-7
	180P-10		420K-17		163E-7
	180R-10		420L-17		163G-7
	180S-10		420M-17		163H-7
	180T-10		420N-17		163N-7
	180U-10		420P-17		163R-7
17917-87L00	420A-20		420R-17		163S-7
	420B-20		420S-17	19120-88L11	163B-7
	420C-20		420T-17		163C-7
	420D-20		420U-17		163F-7

PART NO.	FIG.NO.-REF.NO.	PART NO.	FIG.NO.-REF.NO.	PART NO.	FIG.NO.-REF.NO.
	163J-7		570A-2		204G-1
	163K-7		570B-2		204H-1
	163L-7		570C-2		204J-1
	163M-7		570D-2		204K-1
	163P-7		570E-2		204L-1
	163T-7		570F-2		204M-1
	163U-7		570G-2		204N-1
	570A-56		570H-2		204P-1
	570B-56	21112-88L00	444A-41		204R-1
	570C-56		444B-41		204S-1
	570D-56		444C-41		204T-1
	570E-56		444D-41		204U-1
	570F-56		444E-41	21131-88L00	444A-70
	570G-56		444F-41		444B-71
	570H-56		444G-41		444C-71
19131-95502	163A-8		444H-41		444D-70
	163B-8		444J-41		444E-70
	163C-8		444K-41		444F-71
	163D-8		570A-40		444G-71
	163E-8		570B-40		444H-71
	163F-8		570C-40		444J-71
	163G-8		570D-40		444K-71
	163H-8		570E-40		570A-57
	163J-8		570F-40		570B-57
	163K-8		570G-40		570C-57
	163L-8		570H-40		570D-57
	163M-8	21121-93300	206A-13		570E-57
	163N-8		206B-13		570F-57
	163P-8		206C-13		570G-57
	163R-8		206D-13		570H-57
	163S-8		206E-13	21151-88L00	204A-2
	163T-8		206F-13		204B-2
	163U-8		206G-13		204C-2
			206H-13		204D-2
			206J-13		204E-2
			206K-13		204F-2
			206L-13		204G-2
20000			206M-13		204H-2
			210A-1		204J-2
			210B-1		204K-2
21110-88L00	444A-3		210C-1		204L-2
	444B-3		210D-1		204M-2
	444C-3		210E-1		204N-2
	444D-3		210F-1		204P-2
	444E-3	21126-88L00	204A-1		204R-2
	444F-3		204B-1		204S-2
	444G-3		204C-1		204T-2
	444H-3		204D-1		204U-2
	444J-3		204E-1	21210-88L00	204A-5
	444K-3		204F-1		204B-5

PART NO.	FIG.NO.-REF.NO.	PART NO.	FIG.NO.-REF.NO.	PART NO.	FIG.NO.-REF.NO.
	204C-5		204U-6-1		204S-9
	204D-5	23111-88L10	204A-6-2		204T-9
	204E-5		204B-6		204U-9
	204F-5		204C-6	23213-89J01	204A-12
	204G-5		204D-6-2		204B-12
	204H-5		204E-6-2		204C-12
	204J-5		204F-6		204D-12
	204K-5		204G-6-2		204E-12
	204L-5		204H-6		204F-12
	204M-5		204J-6		204G-12
	204N-5		204K-6		204H-12
	204P-5		204L-6		204J-12
	204R-5		204M-6		204K-12
	204S-5		204R-6-2		204L-12
	204T-5		204S-6-2		204M-12
	204U-5		204T-6-2		204N-12
22511-99011	336A-5		204U-6-2		204P-12
	336B-5	23115-88L00	204A-8		204R-12
	336B-33		204B-8		204S-12
	336C-5		204C-8		204T-12
	336C-33		204D-8		204U-12
	336D-5		204E-8	23214-89J00	204A-13
	336E-5		204F-8		204B-13
	336F-5		204G-8		204C-13
	336F-33		204H-8		204D-13
	336G-5		204J-8		204E-13
	336H-5		204K-8		204F-13
	336J-5		204L-8		204G-13
	336J-33		204M-8		204H-13
	336K-5		204N-8		204J-13
	336K-33		204P-8		204K-13
	336L-5		204R-8		204L-13
	336M-5		204S-8		204M-13
	336N-5		204T-8		204N-13
	336P-5		204U-8		204P-13
	336R-5	23210-88L00	204A-9		204R-13
	336S-5		204B-9		204S-13
	336T-5		204C-9		204T-13
	336U-5		204D-9		204U-13
	570A-81		204E-9	23230-88L00	444A-4
	570C-81		204F-9		444B-4
23111-88L00	204A-6-1		204G-9		444C-4
	204D-6-1		204H-9		444D-4
	204E-6-1		204J-9		444E-4
	204G-6-1		204K-9		444F-4
	204N-6		204L-9		444G-4
	204P-6		204M-9		444H-4
	204R-6-1		204N-9		444J-4
	204S-6-1		204P-9		444K-4
	204T-6-1		204R-9		570A-3

PART NO.	FIG.NO.-REF.NO.	PART NO.	FIG.NO.-REF.NO.	PART NO.	FIG.NO.-REF.NO.
	570B-3		210D-2-1		206B-9
	570C-3		210E-2-1		206C-9
	570D-3		210F-2-1		206D-9
	570E-3	25111-88L40	210C-2-2		206E-9
	570F-3		210D-2-2		206F-9
	570G-3		210E-2-2		206G-9
	570H-3		210F-2-2		206H-9
23311-95J00	204A-15	25141-99E03	210A-3		206J-9
	204B-15		210B-3		206K-9
	204C-15		210C-3		206L-9
	204D-15		210D-3		206M-9
	204E-15		210E-3	25230-94300	210A-6
	204F-15		210F-3		210B-6
	204G-15	25205-94501	210A-4		210C-6
	204H-15		210B-4		210D-6
	204J-15		210C-4		210E-6
	204K-15		210D-4		210F-6
	204L-15		210E-4	25232-96302	206A-10
	204M-15		210F-4		206B-10
	204N-15	25211-87J00	206A-2		206C-10
	204P-15		206B-2		206D-10
	204R-15		206C-2		206E-10
	204S-15		206D-2		206F-10
	204T-15		206E-2		206G-10
	204U-15		206F-2		206H-10
25111-88L00	206A-1-1		206G-2		206J-10
	206D-1-1		206H-2		206K-10
	206E-1-1		206J-2		206L-10
	206G-1-1		206K-2		206M-10
25111-88L10	206A-1-2		206L-2	25311-88L00	206A-11
	206B-1		206M-2		206B-11
	206C-1	25211-94501	210A-5		206C-11
	206D-1-2		210B-5		206D-11
	206E-1-2		210C-5		206E-11
	206F-1		210D-5		206F-11
	206G-1-2		210E-5		206G-11
	206H-1-1		210F-5		206H-11
	206J-1-1	25212-94401	206A-5		206J-11
	206K-1-1		206B-5		206K-11
	206L-1-1		206C-5		206L-11
	206M-1-1		206D-5		206M-11
25111-88L20	206G-1-3		206E-5	25311-94510	210A-7
	206H-1-2		206F-5		210B-7
	206J-1-2		206G-5		210C-7
	206K-1-2		206H-5		210D-7
	206L-1-2		206J-5		210E-7
	206M-1-2		206K-5		210F-7
25111-88L30	210A-2		206L-5	25700-88L00	407A-20
	210B-2		206M-5		407B-20
	210C-2-1	25223-94400	206A-9		407C-20

PART NO.	FIG.NO.-REF.NO.	PART NO.	FIG.NO.-REF.NO.	PART NO.	FIG.NO.-REF.NO.
	407D-20	29141-93J00	160A-5		160K-6
	407E-20		160B-5		160L-6
	407F-20		160C-5		160M-6
	407G-22		160D-5	29404-93J10	315A-12
	407H-22		160E-5		315C-12
	407J-22		160F-5		315E-12
	407K-22		160G-5		315F-12
	407L-22		160H-5		337A-2
	407M-22		160J-5		337B-2
25700-99E00	407N-32		160K-5		337C-2
	407P-32		160L-5		337D-2
	407R-32		160M-5		337E-2
	407S-32		204A-7		337F-2
	407T-32		204B-7		337G-2
	407U-32		204C-7		337H-2
29103-93J00	315D-12		204D-7		337J-2
	315G-12		204E-7		337K-2
	315H-12		204F-7		337L-2
	315L-12		204G-7		337M-2
	315M-12		204H-7		337N-2
	315N-12		204J-7		337P-2
	315P-12		204K-7		337R-2
	315R-12		204L-7		
	315S-12		204M-7		
	315T-12		204N-7		
	315U-12		204P-7		
29116-93J00	401A-15		204R-7		
	401B-15		204S-7	30000	
	401C-15		204T-7		
	401D-15		204U-7		
	401E-15		336D-26	31100-94J22	301A-1
	401F-15		336G-26	31111-87J10	340A-9
	401G-15		336H-26		340B-9
	401H-15		336L-22		340C-9
	401J-15		336M-22		340D-9
	401K-15		336N-26		340E-9
	401L-15		336P-22		340F-9
	401M-15		336R-26		340G-9
	401N-15		336S-26		340H-9
	401P-15		336T-22		340J-9
	401R-15		336U-22		340K-9
	401S-15	29162-93J00	160A-6		340L-9
	401T-15		160B-6		340M-9
	401U-15		160C-6		340N-9
29116-93J10	160N-12		160D-6		340P-9
	160P-12		160E-6		340R-9
	160R-12		160F-6	31123-97E10	340A-4
	160S-12		160G-6		340B-4
	160T-12		160H-6		340C-4
	160U-12		160J-6		340D-4

PART NO.	FIG.NO.-REF.NO.	PART NO.	FIG.NO.-REF.NO.	PART NO.	FIG.NO.-REF.NO.
	340E-4		340H-7	31344-90J00	301A-15
	340F-4		340J-7	31360-93J01	301A-16
	340G-4		340K-7	31912-88L00	301A-18
	340H-4		340L-7	31918-87L00	301A-19
	340J-4		340M-7	32102-88L01	303A-1
	340K-4		340N-7	32120-88L00	303A-5
	340L-4		340P-7	32160-88L00	303A-6
	340M-4		340R-7	32800-88L00	310A-1
	340N-4	31151-94J01	301A-4	32890-88L00	310A-3
	340P-4	31152-90J00	301A-5	33220-64L10	303A-8
	340R-4	31153-90J00	301A-6	33410-87L00	310A-7
31131-94J00	301A-2	31170-94J00	301A-17	33634-96J00	322A-4
31133-94900	340A-5	31171-96J00	301A-7		322B-4
	340B-5	31173-88L11	340A-3		322C-4
	340C-5		340B-3		322D-4
	340D-5		340C-3		322E-4
	340E-5		340D-3		322F-4
	340F-5		340E-3		322G-4
	340G-5		340F-3		322H-4
	340H-5		340G-3		322J-4
	340J-5		340H-3		322K-4
	340K-5		340J-3		322L-4
	340L-5		340K-3		322M-4
	340M-5		340L-3		322N-4
	340N-5		340M-3		322P-4
	340P-5		340N-3		322R-4
	340R-5		340P-3		322S-4
31135-90J00	301A-3		340R-3		322T-4
31135-94900	340A-6	31173-94J01	301A-8		322U-4
	340B-6	31191-96J00	301A-9	33799-97E00	340A-8
	340C-6	31220-94J00	301A-10		340B-8
	340D-6	31310-90J00	301A-11		340C-8
	340E-6	31311-87J10	340A-2		340D-8
	340F-6		340B-2		340E-8
	340G-6		340C-2		340F-8
	340H-6		340D-2		340G-8
	340J-6		340E-2		340H-8
	340K-6		340F-2		340J-8
	340L-6		340G-2		340K-8
	340M-6		340H-2		340L-8
	340N-6		340J-2		340M-8
	340P-6		340K-2		340N-8
	340R-6		340L-2		340P-8
31136-87J10	340A-7		340M-2		340R-8
	340B-7		340N-2	33810-88L10	322A-1
	340C-7		340P-2		322B-1
	340D-7		340R-2		322C-1
	340E-7	31320-94J00	301A-12		322D-1
	340F-7	31341-94J00	301A-13		322E-1
	340G-7	31343-90J00	301A-14		322F-1

PART NO.	FIG.NO.-REF.NO.
	322G-1
	322H-1
	322J-1
	322K-1
	322L-1
	322M-1
	322N-1
	322P-1
	322R-1
	322S-1
	322T-1
	322U-1
33833-91J00	444A-78
	444B-79
	444C-79
	444D-78
	444E-78
	444F-81
	444G-81
	444H-81
	444J-81
	444K-81
33834-88L00	444A-76
	444B-77
	444C-77
	444D-76
	444E-76
	444F-78
	444G-78
	444H-78
	444J-78
	444K-78
	570A-78
	570B-79
	570C-78
	570D-79
	570E-79
	570F-79
	570G-79
	570H-79
33925-88L10	326A-10
	326B-7
	326C-10
	326D-10
	326E-10
	326F-10
	326G-10
	326H-10
	326J-7
	326K-7

PART NO.	FIG.NO.-REF.NO.
	326L-10
	326M-10
	326N-10
	326P-10
	326R-10
	326S-10
	326T-10
	326U-10
33930-88LJ0	326G-9
	326J-6
	326L-9
33930-88LK0	326H-9
	326K-6
	326M-9
33930-88LL0	326A-9
	326B-6
	326C-9
33930-88LM0	326D-9
33930-88LN0	326E-9
	326F-9
33930-88LP0	326R-9
	326T-9
33930-88LQ0	326S-9
	326U-9
33930-88LR0	326N-9
	326P-9
34000-96L00	503A-1
	503D-1
	503E-1
	503G-1
	503H-1
	503N-1
	503R-1
	503S-1
34011-96L00	503A-2
	503B-1
	503C-1
	503D-2
	503E-2
	503F-1
	503G-2
	503H-2
	503J-1
	503K-1
	503L-1
	503M-1
	503N-2
	503P-1
	503R-2
	503S-2

PART NO.	FIG.NO.-REF.NO.
	503T-1
	503U-1
34100-93J00	502A-3-1
	502B-3-1
	502C-3-1
	502D-3-1
	502E-3-1
	502F-3-1
	502G-3-1
	502H-3-1
	502J-3-1
	502K-3-1
	502L-3-1
	502M-3-1
	502N-3-1
	502P-3-1
	502R-3-1
	502S-3-1
	502T-3-1
	502U-3-1
34100-93J11	502A-3-2
	502B-3-2
	502C-3-2
	502D-3-2
	502E-3-2
	502F-3-2
	502G-3-2
	502H-3-2
	502J-3-2
	502K-3-2
	502L-3-2
	502M-3-2
	502N-3-2
	502P-3-2
	502R-3-2
	502S-3-2
	502T-3-2
	502U-3-2
34100-93J20	502A-3-3
	502B-3-3
	502C-3-3
	502D-3-3
	502E-3-3
	502F-3-3
	502G-3-3
	502H-3-3
	502J-3-3
	502K-3-3
	502L-3-3
	502M-3-3

PART NO.	FIG.NO.-REF.NO.
	502N-3-3
	502P-3-3
	502R-3-3
	502S-3-3
	502T-3-3
	502U-3-3
34100-93J31	502A-3-4
	502B-3-4
	502C-3-4
	502D-3-4
	502E-3-4
	502F-3-4
	502G-3-4
	502H-3-4
	502J-3-4
	502K-3-4
	502L-3-4
	502M-3-4
	502N-3-4
	502P-3-4
	502R-3-4
	502S-3-4
	502T-3-4
	502U-3-4
34100-93J40	502A-3-5
	502B-3-5
	502C-3-5
	502D-3-5
	502E-3-5
	502F-3-5
	502G-3-5
	502H-3-5
	502J-3-5
	502K-3-5
	502L-3-5
	502M-3-5
	502N-3-5
	502P-3-5
	502R-3-5
	502S-3-5
	502T-3-5
	502U-3-5
34100-93J51	502A-3-6
	502B-3-6
	502C-3-6
	502D-3-6
	502E-3-6
	502F-3-6
	502G-3-6
	502H-3-6

PART NO.	FIG.NO.-REF.NO.
	502J-3-6
	502K-3-6
	502L-3-6
	502M-3-6
	502N-3-6
	502P-3-6
	502R-3-6
	502S-3-6
	502T-3-6
	502U-3-6
34100-93J60	502A-3-7
	502B-3-7
	502C-3-7
	502D-3-7
	502E-3-7
	502F-3-7
	502G-3-7
	502H-3-7
	502J-3-7
	502K-3-7
	502L-3-7
	502M-3-7
	502N-3-7
	502P-3-7
	502R-3-7
	502S-3-7
	502T-3-7
	502U-3-7
34112-96L00	503A-3
	503B-2
	503C-2
	503D-3
	503E-3
	503F-2
	503G-3
	503H-3
	503J-2
	503K-2
	503L-2
	503M-2
	503N-3
	503P-2
	503R-3
	503S-3
	503T-2
	503U-2
34190-87D00	502A-26
	502B-24
	502C-24
	502D-26

PART NO.	FIG.NO.-REF.NO.
	502E-26
	502F-24
	502G-26
	502H-26
	502J-24
	502K-24
	502L-24
	502M-24
	502N-26
	502P-24
	502R-26
	502S-26
	502T-24
	502U-24
34190-88L00	503A-17
	503B-8
	503C-8
	503D-17
	503E-17
	503F-8
	503G-17
	503H-17
	503J-8
	503K-8
	503L-8
	503M-8
	503N-17
	503P-8
	503R-17
	503S-17
	503T-8
	503U-8
34190-95500	502A-24
	502B-22
	502C-22
	502D-24
	502E-24
	502F-22
	502G-24
	502H-24
	502J-22
	502K-22
	502L-22
	502M-22
	502N-24
	502P-22
	502R-24
	502S-24
	502T-22
	502U-22

PART NO.	FIG.NO.-REF.NO.	PART NO.	FIG.NO.-REF.NO.	PART NO.	FIG.NO.-REF.NO.
34191-92E00	502A-5		503R-4		460D-3-2
	502A-17		503S-4		460E-5-2
	502B-5		503T-3		460F-3-2
	502B-17		503U-3		460G-3-2
	502C-5	34200-87L00	444A-45		460H-5-2
	502C-17		444B-45		502A-20-2
	502D-5		444C-45		502B-20-2
	502D-17		444D-45		502C-20-2
	502E-5		444E-45		502D-20-2
	502E-17		444F-45		502E-20-2
	502F-5		444G-45		502F-20-2
	502F-17		444H-45		502G-20-2
	502G-5		444J-45		502H-20-2
	502G-17		444K-45		502J-20-2
	502H-5		570A-44		502K-20-2
	502H-17		570B-44		502L-20-2
	502J-5		570C-44		502M-20-2
	502J-17		570D-44		502N-20-2
	502K-5		570E-44		502P-20-2
	502K-17		570F-44		502R-20-2
	502L-5		570G-44		502S-20-2
	502L-17		570H-44		502T-20-2
	502M-5	34200-93J00	460A-3-1		502U-20-2
	502M-17		460C-3-1	34200-93J40	502A-22-1
	502N-5		460D-3-1		502D-22-1
	502N-17		460E-5-1		502E-22-1
	502P-5		460F-3-1		502G-22-1
	502P-17		460G-3-1		502H-22-1
	502R-5		460H-5-1		502N-22-1
	502R-17		502A-20-1		502R-22-1
	502S-5		502B-20-1		502S-22-1
	502S-17		502C-20-1	34200-93J51	502A-22-2
	502T-5		502D-20-1		502D-22-2
	502T-17		502E-20-1		502E-22-2
	502U-5		502F-20-1		502G-22-2
	502U-17		502G-20-1		502H-22-2
34193-96L00	503A-4		502H-20-1		502N-22-2
	503B-3		502J-20-1		502R-22-2
	503C-3		502K-20-1		502S-22-2
	503D-4		502L-20-1	34211-96L00	503A-5
	503E-4		502M-20-1		503B-4
	503F-3		502N-20-1		503C-4
	503G-4		502P-20-1		503D-5
	503H-4		502R-20-1		503E-5
	503J-3		502S-20-1		503F-4
	503K-3		502T-20-1		503G-5
	503L-3		502U-20-1		503H-5
	503M-3	34200-93J12	460A-3-2		503J-4
	503N-4		460B-3		503K-4
	503P-3		460C-3-2		503L-4

PART NO.	FIG.NO.-REF.NO.	PART NO.	FIG.NO.-REF.NO.	PART NO.	FIG.NO.-REF.NO.
	503M-4		502H-11		460H-3-2
	503N-5		502J-11		502A-14-2
	503P-4		502K-11		502B-14-2
	503R-5		502L-11		502C-14-2
	503S-5		502M-11		502D-14-2
	503T-4		502N-11		502E-14-2
	503U-4		502P-11		502F-14-2
34300-93J00	502A-10-1		502R-11		502G-14-2
	502B-10-1		502S-11		502H-14-2
	502C-10-1		502T-11		502J-14-2
	502D-10-1		502U-11		502K-14-2
	502E-10-1	34360-92E00	502A-12		502L-14-2
	502F-10-1		502B-12		502M-14-2
	502G-10-1		502C-12		502N-14-2
	502H-10-1		502D-12		502P-14-2
	502J-10-1		502E-12		502R-14-2
	502K-10-1		502F-12		502S-14-2
	502L-10-1		502G-12		502T-14-2
	502M-10-1		502H-12		502U-14-2
	502N-10-1		502J-12	34600-93J00	502A-8-1
	502P-10-1		502K-12		502B-8-1
	502R-10-1		502L-12		502C-8-1
	502S-10-1		502M-12		502D-8-1
	502T-10-1		502N-12		502E-8-1
	502U-10-1		502P-12		502F-8-1
34300-93J11	502A-10-2		502R-12		502G-8-1
	502B-10-2		502S-12		502H-8-1
	502C-10-2		502T-12		502J-8-1
	502D-10-2		502U-12		502K-8-1
	502E-10-2	34500-93J00	460E-3-1		502L-8-1
	502F-10-2		460H-3-1		502M-8-1
	502G-10-2		502A-14-1		502N-8-1
	502H-10-2		502B-14-1		502P-8-1
	502J-10-2		502C-14-1		502R-8-1
	502K-10-2		502D-14-1		502S-8-1
	502L-10-2		502E-14-1		502T-8-1
	502M-10-2		502F-14-1		502U-8-1
	502N-10-2		502G-14-1	34600-93J11	502A-8-2
	502P-10-2		502H-14-1		502B-8-2
	502R-10-2		502J-14-1		502C-8-2
	502S-10-2		502K-14-1		502D-8-2
	502T-10-2		502L-14-1		502E-8-2
	502U-10-2		502M-14-1		502F-8-2
34310-92E00	502A-11		502N-14-1		502G-8-2
	502B-11		502P-14-1		502H-8-2
	502C-11		502R-14-1		502J-8-2
	502D-11		502S-14-1		502K-8-2
	502E-11		502T-14-1		502L-8-2
	502F-11		502U-14-1		502M-8-2
	502G-11	34500-93J11	460E-3-2		502N-8-2

PART NO.	FIG.NO.-REF.NO.
	502P-8-2
	502R-8-2
	502S-8-2
	502T-8-2
	502U-8-2
34650-93J20	502A-16-1
	502B-16-1
	502C-16-1
	502D-16-1
	502E-16-1
	502F-16-1
	502G-16-1
	502H-16-1
	502J-16-1
	502K-16-1
	502L-16-1
	502M-16-1
	502N-16-1
	502P-16-1
	502R-16-1
	502S-16-1
	502T-16-1
	502U-16-1
34650-93J31	502A-16-2
	502B-16-2
	502C-16-2
	502D-16-2
	502E-16-2
	502F-16-2
	502G-16-2
	502H-16-2
	502J-16-2
	502K-16-2
	502L-16-2
	502M-16-2
	502N-16-2
	502P-16-2
	502R-16-2
	502S-16-2
	502T-16-2
	502U-16-2
34660-90J02	507A-1
34800-93J00	460A-1-1
	460C-1-1
	460D-1-1
	460E-1-1
	460F-1-1
	460G-1-1
	460H-1-1
	502A-1-1

PART NO.	FIG.NO.-REF.NO.
	502B-1-1
	502C-1-1
	502D-1-1
	502E-1-1
	502F-1-1
	502G-1-1
	502H-1-1
	502J-1-1
	502K-1-1
	502L-1-1
	502M-1-1
	502N-1-1
	502P-1-1
	502R-1-1
	502S-1-1
	502T-1-1
	502U-1-1
34800-93J11	460A-1-2
	460B-1
	460C-1-2
	460D-1-2
	460E-1-2
	460F-1-2
	460G-1-2
	460H-1-2
	502A-1-2
	502B-1-2
	502C-1-2
	502D-1-2
	502E-1-2
	502F-1-2
	502G-1-2
	502H-1-2
	502J-1-2
	502K-1-2
	502L-1-2
	502M-1-2
	502N-1-2
	502P-1-2
	502R-1-2
	502S-1-2
	502T-1-2
	502U-1-2
34825-96L00	503A-6
	503B-5
	503C-5
	503D-6
	503E-6
	503F-5
	503G-6

PART NO.	FIG.NO.-REF.NO.
	503H-6
	503J-5
	503K-5
	503L-5
	503M-5
	503N-6
	503P-5
	503R-6
	503S-6
	503T-5
	503U-5
34830-87J20	315A-1
	315B-1
	315C-1
	315D-1
	315E-1
	315F-1
	315G-1
	315H-1
	315J-1
	315K-1
	315L-1
	315M-1
	315N-1
	315P-1
	315R-1
	315S-1
	315T-1
	315U-1
34840-98J03	315A-2
	315C-2
	315E-2
	315F-2
34840-98J11	315D-2
	315G-2
	315H-2
	315L-2
	315M-2
	315N-2
	315P-2
	315R-2
	315S-2
	315T-2
	315U-2
34841-87L10	315D-5
	315G-5
	315H-5
	315L-5
	315M-5
	315N-5

PART NO.	FIG.NO.-REF.NO.
	315P-5
	315R-5
	315S-5
	315T-5
	315U-5
34841-88L00	315A-10
	315C-10
	315E-10
	315F-10
34842-88L10	315D-6
	315G-6
	315H-6
	315L-6
	315M-6
	315N-6
	315P-6
	315R-6
	315S-6
	315T-6
	315U-6
34843-87L00	315D-7
	315G-7
	315H-7
	315L-7
	315M-7
	315N-7
	315P-7
	315R-7
	315S-7
	315T-7
	315U-7
34845-88L01	315A-11
	315C-11
	315E-11
	315F-11
34845-88L10	315D-8
	315G-8
	315H-8
	315L-8
	315M-8
	315N-8
	315P-8
	315R-8
	315S-8
	315T-8
	315U-8
34846-87L00	315D-4
	315G-4
	315H-4
	315L-4

PART NO.	FIG.NO.-REF.NO.
	315M-4
	315N-4
	315P-4
	315R-4
	315S-4
	315T-4
	315U-4
36001-88L00	503A-11
	503D-11
	503E-11
	503G-11
	503H-11
	503N-11
	503R-11
	503S-11
36610-88LC0	322B-3
	322J-3
	322K-3
36610-88LD0	322A-3
	322C-3
	322E-3
	322F-3
36610-88LE1	322D-3
	322G-3
	322H-3
	322L-3
	322M-3
	322N-3
	322P-3
	322R-3
	322S-3
	322T-3
	322U-3
36611-88L00	322D-17
	322G-17
	322H-17
	322L-17
	322M-17
	322N-17
	322P-17
	322R-17
	322S-17
	322T-17
	322U-17
36612-96J00	322A-15
	322B-15
	322C-15
	322D-15
	322E-15
	322F-15

PART NO.	FIG.NO.-REF.NO.
	322G-15
	322H-15
	322J-15
	322K-15
	322L-15
	322M-15
	322N-15
	322P-15
	322R-15
	322S-15
	322T-15
	322U-15
36615-96300	502A-7
	502B-7
	502C-7
	502D-7
	502E-7
	502F-7
	502G-7
	502H-7
	502J-7
	502K-7
	502L-7
	502M-7
	502N-7
	502P-7
	502R-7
	502S-7
	502T-7
	502U-7
	503A-8
	503D-8
	503E-8
	503G-8
	503H-8
	503N-8
	503R-8
	503S-8
36617-88L00	315D-11
	315G-11
	315H-11
	315L-11
	315M-11
	315N-11
	315P-11
	315R-11
	315S-11
	315T-11
	315U-11
	322A-21

PART NO.	FIG.NO.-REF.NO.	PART NO.	FIG.NO.-REF.NO.	PART NO.	FIG.NO.-REF.NO.
	322B-21		570F-45		570B-4
	322C-21		570G-45		570C-4
	322D-22		570H-45		570D-4
	322E-21	36617-93J10	322A-23		570E-4
	322F-21		322B-23		570F-4
	322G-22		322C-23		570G-4
	322H-22		322D-24		570H-4
	322J-21		322E-23	36620-93J02	521A-4-1
	322K-21		322F-23		521B-2-1
	322L-22		322G-24		521C-2-1
	322M-22		322H-24		521D-4-1
	322N-22		322J-23		521E-4-1
	322P-22		322K-23		521F-2-1
	322R-22		322L-24		521G-4-1
	322S-22		322M-24		521H-4-1
	322T-22		322N-24		521J-2-1
	322U-22		322P-24		521K-2-1
36617-88L10	322A-22		322R-24		521L-2-1
	322B-22		322S-24		521M-2-1
	322C-22		322T-24		521N-4-1
	322D-23		322U-24		521P-2-1
	322E-22	36618-43410	322A-16		521R-4-1
	322F-22		322B-16		521S-4-1
	322G-23		322C-16		521T-2-1
	322H-23		322D-16		521U-2-1
	322J-22		322E-16	36620-93J10	521A-1-1
	322K-22		322F-16		521D-1-1
	322L-23		322G-16		521E-1-1
	322M-23		322H-16		521G-1-1
	322N-23		322J-16		521H-1-1
	322P-23		322K-16		521N-1-1
	322R-23		322L-16		521R-1-1
	322S-23		322M-16		521S-1-1
	322T-23		322N-16	36620-93J30	521A-2
	322U-23		322P-16		521D-2
36617-88L90	444A-46		322R-16		521E-2
	444B-46		322S-16		521G-2
	444C-46		322T-16		521H-2
	444D-46		322U-16		521N-2
	444E-46	36620-88L10	444A-5		521R-2
	444F-46		444B-5		521S-2
	444G-46		444C-5	36620-93J40	521A-1-2
	444H-46		444D-5		521D-1-2
	444J-46		444E-5		521E-1-2
	444K-46		444F-5		521G-1-2
	570A-45		444G-5		521H-1-2
	570B-45		444H-5		521N-1-2
	570C-45		444J-5		521R-1-2
	570D-45		444K-5		521S-1-2
	570E-45		570A-4	36620-93J52	521A-4-2

PART NO.	FIG.NO.-REF.NO.	PART NO.	FIG.NO.-REF.NO.	PART NO.	FIG.NO.-REF.NO.
	521B-2-2		521P-5		502D-27
	521C-2-2		521T-5		502E-27
	521D-4-2		521U-5		502F-25
	521E-4-2	36646-93J01	508A-2		502G-27
	521F-2-2		508B-2		502H-27
	521G-4-2		508C-2		502J-25
	521H-4-2		508D-2		502K-25
	521J-2-2		508E-2		502L-25
	521K-2-2		508F-2		502M-25
	521L-2-2		508G-2		502N-27
	521M-2-2		508H-2		502P-25
	521N-4-2	36656-88L00	315A-8		502R-27
	521P-2-2		315C-8		502S-27
	521R-4-2		315D-15		502T-25
	521S-4-2		315E-8		502U-25
	521T-2-2		315F-8	36662-88L10	503A-12
	521U-2-2		315G-15		503B-6
36620-93J62	521A-4-3		315H-15		503C-6
	521B-2-3		315L-15		503D-12
	521C-2-3		315M-15		503E-12
	521D-4-3		315N-15		503F-6
	521E-4-3		315P-15		503G-12
	521F-2-3		315R-15		503H-12
	521G-4-3		315S-15		503J-6
	521H-4-3		315T-15		503K-6
	521J-2-3		315U-15		503L-6
	521K-2-3	36656-88L10	315B-3		503M-6
	521L-2-3		315J-3		503N-12
	521M-2-3		315K-3		503P-6
	521N-4-3	36660-94480	521B-6		503R-12
	521P-2-3		521C-6		503S-12
	521R-4-3		521F-6		503T-6
	521S-4-3		521J-6		503U-6
	521T-2-3		521K-6	36662-88L20	503A-18
	521U-2-3		521L-6		503B-9
36628-92E00	508A-3		521M-6		503C-9
	508B-3		521P-6		503D-18
	508C-3		521T-6		503E-18
	508D-3		521U-6		503F-9
	508E-3	36661-96L10	503A-7		503G-18
	508F-3		503D-7		503H-18
	508G-3		503E-7		503J-9
	508H-3		503G-7		503K-9
36630-92E00	521B-5		503H-7		503L-9
	521C-5		503N-7		503M-9
	521F-5		503R-7		503N-18
	521J-5		503S-7		503P-9
	521K-5	36662-88L00	502A-27		503R-18
	521L-5		502B-25		503S-18
	521M-5		502C-25		503T-9

PART NO.	FIG.NO.-REF.NO.
	503U-9
36662-88L30	503A-19
	503B-10
	503C-10
	503D-19
	503E-19
	503F-10
	503G-19
	503H-19
	503J-10
	503K-10
	503L-10
	503M-10
	503N-19
	503P-10
	503R-19
	503S-19
	503T-10
	503U-10
36663-88L00	502A-28
	502B-26
	502C-26
	502D-28
	502E-28
	502F-26
	502G-28
	502H-28
	502J-26
	502K-26
	502L-26
	502M-26
	502N-28
	502P-26
	502R-28
	502S-28
	502T-26
	502U-26
	503A-13
	503D-13
	503E-13
	503G-13
	503H-13
	503N-13
	503R-13
	503S-13
36663-98J00	502A-29
	502B-27
	502C-27
	502D-29
	502E-29

PART NO.	FIG.NO.-REF.NO.
	502F-27
	502G-29
	502H-29
	502J-27
	502K-27
	502L-27
	502M-27
	502N-29
	502P-27
	502R-29
	502S-29
	502T-27
	502U-27
36663-98J10	502A-31
	502B-29
	502C-29
	502D-31
	502E-31
	502F-29
	502G-31
	502H-31
	502J-29
	502K-29
	502L-29
	502M-29
	502N-31
	502P-29
	502R-31
	502S-31
	502T-29
	502U-29
	503A-9
	503D-9
	503E-9
	503G-9
	503H-9
	503N-9
	503R-9
	503S-9
36664-88L00	503A-14
	503B-7
	503C-7
	503D-14
	503E-14
	503F-7
	503G-14
	503H-14
	503J-7
	503K-7
	503L-7

PART NO.	FIG.NO.-REF.NO.
	503M-7
	503N-14
	503P-7
	503R-14
	503S-14
	503T-7
	503U-7
36665-88L00	502A-33
	502B-31
	502C-31
	502D-33
	502E-33
	502F-31
	502G-33
	502H-33
	502J-31
	502K-31
	502L-31
	502M-31
	502N-33
	502P-31
	502R-33
	502S-33
	502T-31
	502U-31
	503A-15
	503D-15
	503E-15
	503G-15
	503H-15
	503N-15
	503R-15
	503S-15
36665-88L10	502A-34
	502B-32
	502C-32
	502D-34
	502E-34
	502F-32
	502G-34
	502H-34
	502J-32
	502K-32
	502L-32
	502M-32
	502N-34
	502P-32
	502R-34
	502S-34
	502T-32

PART NO.	FIG.NO.-REF.NO.
	502U-32
	503A-16
	503D-16
	503E-16
	503G-16
	503H-16
	503N-16
	503R-16
	503S-16
36668-87L00	322A-5
	322B-5
	322C-5
	322D-5
	322E-5
	322F-5
	322G-5
	322H-5
	322J-5
	322K-5
	322L-5
	322M-5
	322N-5
	322P-5
	322R-5
	322S-5
	322T-5
	322U-5
36682-92E00	521A-7
	521B-7
	521C-7
	521D-7
	521E-7
	521F-7
	521G-7
	521H-7
	521J-7
	521K-7
	521L-7
	521M-7
	521N-7
	521P-7
	521R-7
	521S-7
	521T-7
	521U-7
36721-96J00	322A-8
	322B-8
	322C-8
	322D-8
	322E-8

PART NO.	FIG.NO.-REF.NO.
	322F-8
	322G-8
	322H-8
	322J-8
	322K-8
	322L-8
	322M-8
	322N-8
	322P-8
	322R-8
	322S-8
	322T-8
	322U-8
36737-96J00	322A-7
	322B-7
	322C-7
	322D-7
	322E-7
	322F-7
	322G-7
	322H-7
	322J-7
	322K-7
	322L-7
	322M-7
	322N-7
	322P-7
	322R-7
	322S-7
	322T-7
	322U-7
36738-88L00	322A-9
	322B-9
	322C-9
	322D-9
	322E-9
	322F-9
	322G-9
	322H-9
	322J-9
	322K-9
	322L-9
	322M-9
	322N-9
	322P-9
	322R-9
	322S-9
	322T-9
	322U-9
36890-93J00	544A-16

PART NO.	FIG.NO.-REF.NO.
36894-87D00	336D-6
	336G-6
	336H-6
	336L-6
	336M-6
	336N-6
	336P-6
	336R-6
	336S-6
	336T-6
	336U-6
36894-95201	336A-6
	336B-6
	336C-6
	336E-6
	336F-6
	336J-6
	336K-6
36895-87D01	336A-7
	336A-8
	336B-7
	336B-8
	336C-7
	336C-8
	336D-7
	336D-8
	336E-7
	336E-8
	336F-7
	336F-8
	336G-7
	336G-8
	336H-7
	336H-8
	336J-7
	336J-8
	336K-7
	336K-8
	336L-7
	336L-8
	336M-7
	336M-8
	336N-7
	336N-8
	336P-7
	336P-8
	336R-7
	336R-8
	336S-7
	336S-8

PART NO.	FIG.NO.-REF.NO.	PART NO.	FIG.NO.-REF.NO.	PART NO.	FIG.NO.-REF.NO.
	336T-7		570C-5		530C-6
	336T-8		570D-5		530D-6
	336U-7		570E-5		530E-6
	336U-8		570F-5		530F-6
36990-87D00	521A-6		570G-5		530G-6
	521B-4		570H-5		530H-6
	521C-4	37110-93J01	530A-2	37139-99E20	530A-24
	521D-6		530A-20		530B-24
	521E-6		530B-2		530C-24
	521F-4		530B-20		530D-24
	521G-6		530C-2		530E-24
	521H-6		530C-20		530F-24
	521J-4		530D-2		530G-24
	521K-4		530D-20		530H-24
	521L-4		530E-2	37141-99E00	444A-7-1
	521M-4		530E-20		444B-7-1
	521N-6		530F-2		444C-7-1
	521P-4		530F-20		444D-7-1
	521R-6		530G-2		444E-7-1
	521S-6		530G-20		444F-7-1
	521T-4		530H-2		444G-7-1
	521U-4		530H-20		444H-7-1
37100-96J00	530A-1	37110-93J11	508A-4		444J-7-1
	530B-1		508B-4		444K-7-1
	530C-1		508C-4		508A-5-1
	530D-1		508D-4		508B-5-1
	530E-1		508E-4		508C-5-1
	530F-1		508F-4		508D-5-1
	530G-1		508G-4		508E-5-1
	530H-1		508H-4		508F-5-1
37100-96J24	530A-19	37112-88L90	444A-47		508G-5-1
	530B-19		444B-47		508H-5-1
	530C-19		444C-47		530A-3-1
	530D-19		444D-47		530A-21-1
	530E-19		444E-47		530B-3-1
	530F-19		444F-47		530B-21-1
	530G-19		444G-47		530C-3-1
	530H-19		444H-47		530C-21-1
37110-87L01	444A-6		444J-47		530D-3-1
	444B-6		444K-47		530D-21-1
	444C-6		570A-46		530E-3-1
	444D-6		570B-46		530E-21-1
	444E-6		570C-46		530F-3-1
	444F-6		570D-46		530F-21-1
	444G-6		570E-46		530G-3-1
	444H-6		570F-46		530G-21-1
	444J-6		570G-46		530H-3-1
	444K-6		570H-46		530H-21-1
	570A-5	37139-99E00	530A-6		570A-6-1
	570B-5		530B-6		570B-6-1

PART NO.	FIG.NO.-REF.NO.	PART NO.	FIG.NO.-REF.NO.	PART NO.	FIG.NO.-REF.NO.
	570C-6-1		444C-7-3		508A-5-4
	570D-6-1		444D-7-3		508B-5-4
	570E-6-1		444E-7-3		508C-5-4
	570F-6-1		444F-7-3		508D-5-4
	570G-6-1		444G-7-3		508E-5-4
	570H-6-1		444H-7-3		508F-5-4
37141-99E10	444A-7-2		444J-7-3		508G-5-4
	444B-7-2		444K-7-3		508H-5-4
	444C-7-2		508A-5-3		530A-3-4
	444D-7-2		508B-5-3		530A-21-4
	444E-7-2		508C-5-3		530B-3-4
	444F-7-2		508D-5-3		530B-21-4
	444G-7-2		508E-5-3		530C-3-4
	444H-7-2		508F-5-3		530C-21-4
	444J-7-2		508G-5-3		530D-3-4
	444K-7-2		508H-5-3		530D-21-4
	508A-5-2		530A-3-3		530E-3-4
	508B-5-2		530A-21-3		530E-21-4
	508C-5-2		530B-3-3		530F-3-4
	508D-5-2		530B-21-3		530F-21-4
	508E-5-2		530C-3-3		530G-3-4
	508F-5-2		530C-21-3		530G-21-4
	508G-5-2		530D-3-3		530H-3-4
	508H-5-2		530D-21-3		530H-21-4
	530A-3-2		530E-3-3		570A-6-4
	530A-21-2		530E-21-3		570B-6-4
	530B-3-2		530F-3-3		570C-6-4
	530B-21-2		530F-21-3		570D-6-4
	530C-3-2		530G-3-3		570E-6-4
	530C-21-2		530G-21-3		570F-6-4
	530D-3-2		530H-3-3		570G-6-4
	530D-21-2		530H-21-3		570H-6-4
	530E-3-2		570A-6-3	37141-99E40	444A-7-5
	530E-21-2		570B-6-3		444B-7-5
	530F-3-2		570C-6-3		444C-7-5
	530F-21-2		570D-6-3		444D-7-5
	530G-3-2		570E-6-3		444E-7-5
	530G-21-2		570F-6-3		444F-7-5
	530H-3-2		570G-6-3		444G-7-5
	530H-21-2		570H-6-3		444H-7-5
	570A-6-2	37141-99E30	444A-7-4		444J-7-5
	570B-6-2		444B-7-4		444K-7-5
	570C-6-2		444C-7-4		508A-5-5
	570D-6-2		444D-7-4		508B-5-5
	570E-6-2		444E-7-4		508C-5-5
	570F-6-2		444F-7-4		508D-5-5
	570G-6-2		444G-7-4		508E-5-5
	570H-6-2		444H-7-4		508F-5-5
37141-99E20	444A-7-3		444J-7-4		508G-5-5
	444B-7-3		444K-7-4		508H-5-5

PART NO.	FIG.NO.-REF.NO.	PART NO.	FIG.NO.-REF.NO.	PART NO.	FIG.NO.-REF.NO.
	530A-3-5		530E-3-6		570A-6-7
	530A-21-5		530E-21-6		570B-6-7
	530B-3-5		530F-3-6		570C-6-7
	530B-21-5		530F-21-6		570D-6-7
	530C-3-5		530G-3-6		570E-6-7
	530C-21-5		530G-21-6		570F-6-7
	530D-3-5		530H-3-6		570G-6-7
	530D-21-5		530H-21-6		570H-6-7
	530E-3-5		570A-6-6	37141-99E70	444A-7-8
	530E-21-5		570B-6-6		444B-7-8
	530F-3-5		570C-6-6		444C-7-8
	530F-21-5		570D-6-6		444D-7-8
	530G-3-5		570E-6-6		444E-7-8
	530G-21-5		570F-6-6		444F-7-8
	530H-3-5		570G-6-6		444G-7-8
	530H-21-5		570H-6-6		444H-7-8
	570A-6-5	37141-99E60	444A-7-7		444J-7-8
	570B-6-5		444B-7-7		444K-7-8
	570C-6-5		444C-7-7		508A-5-8
	570D-6-5		444D-7-7		508B-5-8
	570E-6-5		444E-7-7		508C-5-8
	570F-6-5		444F-7-7		508D-5-8
	570G-6-5		444G-7-7		508E-5-8
	570H-6-5		444H-7-7		508F-5-8
37141-99E50	444A-7-6		444J-7-7		508G-5-8
	444B-7-6		444K-7-7		508H-5-8
	444C-7-6		508A-5-7		530A-3-8
	444D-7-6		508B-5-7		530A-21-8
	444E-7-6		508C-5-7		530B-3-8
	444F-7-6		508D-5-7		530B-21-8
	444G-7-6		508E-5-7		530C-3-8
	444H-7-6		508F-5-7		530C-21-8
	444J-7-6		508G-5-7		530D-3-8
	444K-7-6		508H-5-7		530D-21-8
	508A-5-6		530A-3-7		530E-3-8
	508B-5-6		530A-21-7		530E-21-8
	508C-5-6		530B-3-7		530F-3-8
	508D-5-6		530B-21-7		530F-21-8
	508E-5-6		530C-3-7		530G-3-8
	508F-5-6		530C-21-7		530G-21-8
	508G-5-6		530D-3-7		530H-3-8
	508H-5-6		530D-21-7		530H-21-8
	530A-3-6		530E-3-7		570A-6-8
	530A-21-6		530E-21-7		570B-6-8
	530B-3-6		530F-3-7		570C-6-8
	530B-21-6		530F-21-7		570D-6-8
	530C-3-6		530G-3-7		570E-6-8
	530C-21-6		530G-21-7		570F-6-8
	530D-3-6		530H-3-7		570G-6-8
	530D-21-6		530H-21-7		570H-6-8

PART NO.	FIG.NO.-REF.NO.	PART NO.	FIG.NO.-REF.NO.	PART NO.	FIG.NO.-REF.NO.
37141-99E80	444A-7-9		444J-7-10		508G-5-11
	444B-7-9		444K-7-10		508H-5-11
	444C-7-9		508A-5-10		530A-3-11
	444D-7-9		508B-5-10		530A-21-11
	444E-7-9		508C-5-10		530B-3-11
	444F-7-9		508D-5-10		530B-21-11
	444G-7-9		508E-5-10		530C-3-11
	444H-7-9		508F-5-10		530C-21-11
	444J-7-9		508G-5-10		530D-3-11
	444K-7-9		508H-5-10		530D-21-11
	508A-5-9		530A-3-10		530E-3-11
	508B-5-9		530A-21-10		530E-21-11
	508C-5-9		530B-3-10		530F-3-11
	508D-5-9		530B-21-10		530F-21-11
	508E-5-9		530C-3-10		530G-3-11
	508F-5-9		530C-21-10		530G-21-11
	508G-5-9		530D-3-10		530H-3-11
	508H-5-9		530D-21-10		530H-21-11
	530A-3-9		530E-3-10		570A-6-11
	530A-21-9		530E-21-10		570B-6-11
	530B-3-9		530F-3-10		570C-6-11
	530B-21-9		530F-21-10		570D-6-11
	530C-3-9		530G-3-10		570E-6-11
	530C-21-9		530G-21-10		570F-6-11
	530D-3-9		530H-3-10		570G-6-11
	530D-21-9		530H-21-10		570H-6-11
	530E-3-9		570A-6-10	37141-99EB0	444A-7-12
	530E-21-9		570B-6-10		444B-7-12
	530F-3-9		570C-6-10		444C-7-12
	530F-21-9		570D-6-10		444D-7-12
	530G-3-9		570E-6-10		444E-7-12
	530G-21-9		570F-6-10		444F-7-12
	530H-3-9		570G-6-10		444G-7-12
	530H-21-9		570H-6-10		444H-7-12
	570A-6-9	37141-99EA0	444A-7-11		444J-7-12
	570B-6-9		444B-7-11		444K-7-12
	570C-6-9		444C-7-11		508A-5-12
	570D-6-9		444D-7-11		508B-5-12
	570E-6-9		444E-7-11		508C-5-12
	570F-6-9		444F-7-11		508D-5-12
	570G-6-9		444G-7-11		508E-5-12
	570H-6-9		444H-7-11		508F-5-12
37141-99E90	444A-7-10		444J-7-11		508G-5-12
	444B-7-10		444K-7-11		508H-5-12
	444C-7-10		508A-5-11		530A-3-12
	444D-7-10		508B-5-11		530A-21-12
	444E-7-10		508C-5-11		530B-3-12
	444F-7-10		508D-5-11		530B-21-12
	444G-7-10		508E-5-11		530C-3-12
	444H-7-10		508F-5-11		530C-21-12

PART NO.	FIG.NO.-REF.NO.	PART NO.	FIG.NO.-REF.NO.	PART NO.	FIG.NO.-REF.NO.
	530D-3-12		530H-4		570G-8
	530D-21-12		530H-22		570H-8
	530E-3-12		570A-7	37210-93J00	530A-17
	530E-21-12		570B-7		530B-17
	530F-3-12		570C-7		530C-17
	530F-21-12		570D-7		530D-17
	530G-3-12		570E-7		530E-17
	530G-21-12		570F-7		530F-17
	530H-3-12		570G-7		530G-17
	530H-21-12		570H-7		530H-17
	570A-6-12	37149-93J00	444A-9	37212-93J00	530A-18
	570B-6-12		444B-9		530B-18
	570C-6-12		444C-9		530C-18
	570D-6-12		444D-9		530D-18
	570E-6-12		444E-9		530E-18
	570F-6-12		444F-9		530F-18
	570G-6-12		444G-9		530G-18
	570H-6-12		444H-9		530H-18
37143-99E00	444A-8		444J-9	37721-93J00	326A-1
	444B-8		444K-9		326B-1
	444C-8		508A-7		326C-1
	444D-8		508B-7		326D-1
	444E-8		508C-7		326E-1
	444F-8		508D-7		326F-1
	444G-8		508E-7		326G-1
	444H-8		508F-7		326H-1
	444J-8		508G-7		326J-1
	444K-8		508H-7		326K-1
	508A-6		530A-5		326L-1
	508B-6		530A-23		326M-1
	508C-6		530B-5		326N-1
	508D-6		530B-23		326P-1
	508E-6		530C-5		326R-1
	508F-6		530C-23		326S-1
	508G-6		530D-5		326T-1
	508H-6		530D-23		326U-1
	530A-4		530E-5	37721-93J91	508A-8
	530A-22		530E-23		508B-8
	530B-4		530F-5		508C-8
	530B-22		530F-23		508D-8
	530C-4		530G-5		508E-8
	530C-22		530G-23		508F-8
	530D-4		530H-5		508G-8
	530D-22		530H-23		508H-8
	530E-4		570A-8	37721-95500	545A-11
	530E-22		570B-8	37725-88L00	326A-3
	530F-4		570C-8		326B-3
	530F-22		570D-8		326C-3
	530G-4		570E-8		326D-3
	530G-22		570F-8		326E-3

PART NO.	FIG.NO.-REF.NO.	PART NO.	FIG.NO.-REF.NO.	PART NO.	FIG.NO.-REF.NO.
	326F-3		508D-9		508B-10
	326G-3		508E-9		508C-10
	326H-3		508F-9		508D-10
	326J-3		508G-9		508E-10
	326K-3		508H-9		508F-10
	326L-3		530A-10		508G-10
	326M-3		530A-25		508H-10
	326N-3		530B-10		530A-11
	326P-3		530B-25		530A-26
	326R-3		530C-10		530B-11
	326S-3		530C-25		530B-26
	326T-3		530D-10		530C-11
	326U-3		530D-25		530C-26
37803-93J04	530A-9		530E-10		530D-11
	530B-9		530E-25		530D-26
	530C-9		530F-10		530E-11
	530D-9		530F-25		530E-26
	530E-9		530G-10		530F-11
	530F-9		530G-25		530F-26
	530G-9		530H-10		530G-11
	530H-9		530H-25		530G-26
37805-93J00	530A-15	37820-99E01	315A-6		530H-11
	530B-15		315B-2		530H-26
	530C-15		315C-6		570A-10
	530D-15		315D-10		570B-10
	530E-15		315E-6		570C-10
	530F-15		315F-6		570D-10
	530G-15		315G-10		570E-10
	530H-15		315H-10		570F-10
37820-87L01	444A-10		315J-2		570G-10
	444B-10		315K-2		570H-10
	444C-10		315L-10	37825-99E00	530A-13
	444D-10		315M-10		530B-13
	444E-10		315N-10		530C-13
	444F-10		315P-10		530D-13
	444G-10		315R-10		530E-13
	444H-10		315S-10		530F-13
	444J-10		315T-10		530G-13
	444K-10		315U-10		530H-13
	570A-9	37823-92E01	444A-11	37826-92J00	444A-12
	570B-9		444B-11		444B-12
	570C-9		444C-11		444C-12
	570D-9		444D-11		444D-12
	570E-9		444E-11		444E-12
	570F-9		444F-11		444F-12
	570G-9		444G-11		444G-12
	570H-9		444H-11		444H-12
37820-93J04	508A-9		444J-11		444J-12
	508B-9		444K-11		444K-12
	508C-9		508A-10		508A-11

PART NO.	FIG.NO.-REF.NO.	PART NO.	FIG.NO.-REF.NO.	PART NO.	FIG.NO.-REF.NO.
	508B-11		444C-14		570C-48
	508C-11		444F-14		570D-48
	508D-11		444G-14		570E-48
	508E-11		444H-14		570F-48
	508F-11		444J-14		570G-48
	508G-11		444K-14		570H-48
	508H-11		570A-13	37852-87J00	444A-14
	530A-12		570B-13		444B-15
	530A-27		570C-13		444C-15
	530B-12		570D-13		444D-14
	530B-27		570E-13		444E-14
	530C-12		570F-13		444F-15
	530C-27		570G-13		444G-15
	530D-12		570H-13		444H-15
	530D-27	37850-90J05	508A-12		444J-15
	530E-12		508B-12		444K-15
	530E-27		508C-12		570A-14
	530F-12		508D-12		570B-14
	530F-27		508E-12		570C-14
	530G-12		508F-12		570D-14
	530G-27		508G-12		570E-14
	530H-12		508H-12		570F-14
	530H-27	37850-92J00	326A-11		570G-14
	570A-11		326C-11		570H-14
	570B-11		326D-11	37852-88L90	444B-50
	570C-11		326E-11		444C-50
	570D-11		326F-11		444F-50
	570E-11		326G-11		444G-50
	570F-11		326H-11		444H-50
	570G-11		326L-11		444J-50
	570H-11		326M-11		444K-50
37835-95D00	444A-48		326N-11		570A-49
	444B-48		326P-11		570B-49
	444C-48		326R-11		570C-49
	444D-48		326S-11		570D-49
	444E-48		326T-11		570E-49
	444F-48		326U-11		570F-49
	444G-48	37850-93J10	544A-4		570G-49
	444H-48	37851-88L90	444A-49		570H-49
	444J-48		444B-49	37853-88L90	444A-34
	444K-48		444C-49		444B-35
	570A-47		444D-49		444C-35
	570B-47		444E-49		444D-34
	570C-47		444F-49		444E-34
	570D-47		444G-49		444F-35
	570E-47		444H-49		444G-35
	570F-47		444J-49		444H-35
	570G-47		444K-49		444J-35
	570H-47		570A-48		444K-35
37850-87L00	444B-14		570B-48		570A-34

PART NO.	FIG.NO.-REF.NO.	PART NO.	FIG.NO.-REF.NO.	PART NO.	FIG.NO.-REF.NO.
	570B-34		530H-16		444D-50
	570C-34	37856-92J00	326A-12		444E-50
	570D-34		326C-12		444F-51
	570E-34		326D-12		444G-51
	570F-34		326E-12		444H-51
	570G-34		326F-12		444J-51
	570H-34		326G-12		444K-51
37854-88L90	444A-58		326H-12		570A-50
	444B-59		326L-12		570B-50
	444C-59		326M-12		570C-50
	444D-58		326N-12		570D-50
	444E-58		326P-12		570E-50
	444F-59		326R-12		570F-50
	444G-59		326S-12		570G-50
	444H-59		326T-12		570H-50
	444J-59		326U-12	37862-87L00	530A-32
	444K-59	37857-92J00	326A-13		530B-32
	570A-72		326C-13		530C-32
	570B-73		326D-13		530D-32
	570C-72		326E-13		530E-32
	570D-73		326F-13		530F-32
	570E-73		326G-13		530G-32
	570F-73		326H-13		530H-32
	570G-73		326L-13	37864-88L90	444A-51
	570H-73		326M-13		444B-52
37855-88L90	444A-57		326N-13		444C-52
	444B-58		326P-13		444D-51
	444C-58		326R-13		444E-51
	444D-57		326S-13		444F-52
	444E-57		326T-13		444G-52
	444F-58		326U-13		444H-52
	444G-58	37859-90J00	508A-51		444J-52
	444H-58		508B-51		444K-52
	444J-58		508C-51		570A-51
	444K-58		508D-51		570B-51
	570A-71		508E-51		570C-51
	570B-72		508F-51		570D-51
	570C-71		508G-51		570E-51
	570D-72		508H-51		570F-51
	570E-72	37860-87L00	530A-31		570G-51
	570F-72		530B-31		570H-51
	570G-72		530C-31	38100-88L11	337A-3
	570H-72		530D-31		337B-3
37855-99E00	530A-16		530E-31		337C-3
	530B-16		530F-31		337D-3
	530C-16		530G-31		337E-3
	530D-16		530H-31		337F-3
	530E-16	37861-87L10	444A-50		337G-3
	530F-16		444B-51		337H-3
	530G-16		444C-51		337J-3

PART NO.	FIG.NO.-REF.NO.
	337K-3
	337L-3
	337M-3
	337N-3
	337P-3
	337R-3
	340A-1
	340B-1
	340C-1
	340D-1
	340E-1
	340F-1
	340G-1
	340H-1
	340J-1
	340K-1
	340L-1
	340M-1
	340N-1
	340P-1
	340R-1
38410-93J12	326A-6
	326C-6
	326D-6
	326E-6
	326F-6
	326G-6
	326H-6
	326L-6
	326M-6
	326N-6
	326P-6
	326R-6
	326S-6
	326T-6
	326U-6
38415-93J00	326A-7
	326C-7
	326D-7
	326E-7
	326F-7
	326G-7
	326H-7
	326L-7
	326M-7
	326N-7
	326P-7
	326R-7
	326S-7
	326T-7

PART NO.	FIG.NO.-REF.NO.
	326U-7
38500-93J00	521A-3
	521B-1
	521C-1
	521D-3
	521E-3
	521F-1
	521G-3
	521H-3
	521J-1
	521K-1
	521L-1
	521M-1
	521N-3
	521P-1
	521R-3
	521S-3
	521T-1
	521U-1
38500-93J90	444A-13
	444B-13
	444C-13
	444D-13
	444E-13
	444F-13
	444G-13
	444H-13
	444J-13
	444K-13
	508A-13
	508B-13
	508C-13
	508D-13
	508E-13
	508F-13
	508G-13
	508H-13
	530A-7
	530A-29
	530B-7
	530B-29
	530C-7
	530C-29
	530D-7
	530D-29
	530E-7
	530E-29
	530F-7
	530F-29
	530G-7

PART NO.	FIG.NO.-REF.NO.
	530G-29
	530H-7
	530H-29
	570A-12
	570B-12
	570C-12
	570D-12
	570E-12
	570F-12
	570G-12
	570H-12
38860-76F01	322A-10
	322A-11
	322B-10
	322B-11
	322C-10
	322C-11
	322D-10
	322D-11
	322E-10
	322E-11
	322F-10
	322F-11
	322G-10
	322G-11
	322H-10
	322H-11
	322J-10
	322J-11
	322K-10
	322K-11
	322L-10
	322L-11
	322M-10
	322M-11
	322N-10
	322N-11
	322P-10
	322P-11
	322R-10
	322R-11
	322S-10
	322S-11
	322T-10
	322T-11
	322U-10
	322U-11
39950-88L00	503A-20
	503B-11
	503C-11

PART NO.	FIG.NO.-REF.NO.
	503D-20
	503E-20
	503F-11
	503G-20
	503H-20
	503J-11
	503K-11
	503L-11
	503M-11
	503N-20
	503P-11
	503R-20
	503S-20
	503T-11
	503U-11
40000	
41111-88L10-0EP	335D-1-1
	335G-1-1
	335H-1-1
	335L-1
	335M-1
	335N-1
	335P-1
	335R-1
	335S-1
	335T-1
	335U-1
41111-88L10-Y5S	335D-1-2
	335G-1-2
	335H-1-2
41111-88L20-0EP	335A-1-1
	335B-1
	335C-1
	335E-1-1
	335F-1
	335J-1
	335K-1
41111-88L20-Y5S	335A-1-2
	335E-1-2
41121-88L01-0EP	335D-2-1
	335G-2-1
	335H-2-1
	335L-2
	335M-2
	335N-2
	335P-2

PART NO.	FIG.NO.-REF.NO.
	335R-2
	335S-2
	335T-2
	335U-2
41121-88L01-Y5S	335D-2-2
	335G-2-2
	335H-2-2
41121-88L10-0EP	335A-2-1
	335B-2
	335C-2
	335E-2-1
	335F-2
	335J-2
	335K-2
41121-88L10-Y5S	335A-2-2
	335E-2-2
41130-87J11	335A-3
	335B-3
	335C-3
	335E-3
	335F-3
	335J-3
	335K-3
41130-88L10	335D-3
	335G-3
	335H-3
	335L-3
	335M-3
	335N-3
	335P-3
	335R-3
	335S-3
	335T-3
	335U-3
41135-93J00	335A-15
	335B-15
	335C-15
	335D-4
	335E-15
	335F-15
	335G-4
	335H-4
	335J-15
	335K-15
	335L-4
	335M-4
	335N-4
	335P-4
	335R-4
	335S-4

PART NO.	FIG.NO.-REF.NO.
	335T-4
	335U-4
41161-94400	442A-1
	442B-1
	442C-1
	442D-1
	442E-1
	442F-1
	442G-1
	442H-1
	575A-2
	575B-2
	575C-2
	575D-2
	575E-2
	575F-2
	575G-2
	575H-2
	575J-2
	575K-2
41221-88L00	336D-23
	336G-23
	336H-23
	336L-19
	336M-19
	336N-23
	336P-19
	336R-23
	336S-23
	336T-19
	336U-19
41224-88L00	336D-25
	336G-25
	336H-25
	336L-21
	336M-21
	336N-25
	336P-21
	336R-25
	336S-25
	336T-21
	336U-21
41226-97E00	336A-19
	336B-15
	336C-15
	336E-19
	336F-15
	336J-15
	336K-15
41230-97E10	336A-24

PART NO.	FIG.NO.-REF.NO.
	336B-20
	336C-20
	336E-24
	336F-20
	336J-20
	336K-20
41231-88L01	336D-27
	336G-27
	336H-27
	336L-23
	336M-23
	336N-27
	336P-23
	336R-27
	336S-27
	336T-23
	336U-23
41234-88L00	336D-28
	336G-28
	336H-28
	336L-24
	336M-24
	336N-28
	336P-24
	336R-28
	336S-28
	336T-24
	336U-24
41270-89J10	336A-20
	336B-16
	336C-16
	336E-20
	336F-16
	336J-16
	336K-16
41280-88L10	336D-24
	336G-24
	336H-24
	336L-20
	336M-20
	336N-24
	336P-20
	336R-24
	336S-24
	336T-20
	336U-20
41280-89J04	336A-21
	336B-17
	336C-17
	336E-21

PART NO.	FIG.NO.-REF.NO.
	336F-17
	336J-17
	336K-17
43111-88L21-0EP	336A-1-3
	336B-1
	336C-1
	336E-1-3
	336F-1
	336J-1
	336K-1
43111-88L21-Y5S	336A-1-4
	336E-1-4
43111-88L31-0EP	336A-1-1
	336E-1-1
43111-88L31-Y5S	336A-1-2
	336E-1-2
43111-88L40-0EP	336D-1-3
	336G-1-3
	336H-1-1
	336L-1
	336M-1
	336R-1-2
	336S-1-2
	336T-1-2
	336U-1-2
43111-88L40-Y5S	336D-1-4
	336G-1-4
	336H-1-2
43111-88L50-0EP	336D-1-1
	336G-1-1
	336N-1
	336P-1
	336R-1-1
	336S-1-1
	336T-1-1
	336U-1-1
43111-88L50-Y5S	336D-1-2
	336G-1-2
43112-99E00	180A-12
	180B-12
	180C-12
	180D-12
	180E-12
	180F-12
	180G-12
	180H-12
	180J-12
	180K-12
	180L-12
	180M-12

PART NO.	FIG.NO.-REF.NO.
	180N-12
	180P-12
	180R-12
	180S-12
	180T-12
	180U-12
43114-88L00	336D-14
	336G-14
	336H-14
	336L-14
	336M-14
	336N-14
	336P-14
	336R-14
	336S-14
	336T-14
	336U-14
43119-88L00	336D-11
	336G-11
	336H-11
	336L-11
	336M-11
	336N-11
	336P-11
	336R-11
	336S-11
	336T-11
	336U-11
43119-88L10	336D-12
	336G-12
	336H-12
	336L-12
	336M-12
	336N-12
	336P-12
	336R-12
	336S-12
	336T-12
	336U-12
43211-87J00	336A-2
	336B-2
	336C-2
	336E-2
	336F-2
	336J-2
	336K-2
43211-88L00	336D-2
	336G-2
	336H-2
	336L-2

PART NO.	FIG.NO.-REF.NO.
	336M-2
	336N-2
	336P-2
	336R-2
	336S-2
	336T-2
	336U-2
43241-87J00	335B-16
	335J-16
	335K-16
43411-88L00	336B-22
	336C-22
	336F-22
	336J-22
	336K-22
	570A-82
	570C-82
43415-88L00	336B-23
	336C-23
	336F-23
	336J-23
	336K-23
	570A-83
	570C-83
43512-88L00	336B-24
	336C-24
	336F-24
	336J-24
	336K-24
	570A-84
	570C-84
43513-88L00	336B-25
	336C-25
	336F-25
	336J-25
	336K-25
	570A-85
	570C-85
43514-88L00	336B-26
	336C-26
	336F-26
	336J-26
	336K-26
	570A-86
	570C-86
43515-88L00	336B-27
	336C-27
	336F-27
	336J-27
	336K-27

PART NO.	FIG.NO.-REF.NO.
	570A-87
	570C-87
43516-88L00	336B-28
	336C-28
	336F-28
	336J-28
	336K-28
	570A-88
	570C-88
43517-88L00	336B-29
	336C-29
	336F-29
	336J-29
	336K-29
	570A-89
	570C-89
43711-89J10	336A-3
	336B-3
	336C-3
	336E-3
	336F-3
	336J-3
	336K-3
43711-97E01	336D-3
	336G-3
	336H-3
	336L-3
	336M-3
	336N-3
	336P-3
	336R-3
	336S-3
	336T-3
	336U-3
43750-88L21-0EP	336A-4-3
	336B-4
	336C-4
	336D-4-3
	336E-4-3
	336F-4
	336G-4-3
	336H-4-1
	336J-4
	336K-4
	336L-4
	336M-4
	336R-4-2
	336S-4-2
	336T-4-2
	336U-4-2

PART NO.	FIG.NO.-REF.NO.
43750-88L21-Y5S	336A-4-4
	336D-4-4
	336E-4-4
	336G-4-4
	336H-4-2
43750-88L31-0EP	336A-4-1
	336D-4-1
	336E-4-1
	336G-4-1
	336N-4
	336P-4
	336R-4-1
	336S-4-1
	336T-4-1
	336U-4-1
43750-88L31-Y5S	336A-4-2
	336D-4-2
	336E-4-2
	336G-4-2
43755-88L00-0EP	336A-11
	336D-19
	336E-11
	336G-19
	336H-19
	336N-19
	336R-19
	336S-19
43761-88L01-0EP	444A-1
	444B-1
	444C-1
	444D-1
	444E-1
	444F-1
	444G-1
	444H-1
	444J-1
	444K-1
	570A-58
	570B-58
	570C-58
	570D-58
	570E-58
	570F-58
	570G-58
	570H-58
43762-88L00	444A-74
	444B-75
	444C-75
	444D-74
	444E-74

PART NO.	FIG.NO.-REF.NO.
	444F-76
	444G-76
	444H-76
	444J-76
	444K-76
	570A-59
	570B-59
	570C-59
	570D-59
	570E-59
	570F-59
	570G-59
	570H-59
43768-88L00	444A-75
	444B-76
	444C-76
	444D-75
	444E-75
	444F-77
	444G-77
	444H-77
	444J-77
	444K-77
	570A-60
	570B-60
	570C-60
	570D-60
	570E-60
	570F-60
	570G-60
	570H-60
43770-99E03	444F-74
	444G-74
	444H-74
	444J-74
	444K-74
	570B-69
	570D-69
	570E-69
	570F-69
	570G-69
	570H-69
45260-89J00	339A-1
	339B-1
	339C-1
45421-89J00	335A-4
	335B-4
	335C-4
	335E-4
	335F-4

PART NO.	FIG.NO.-REF.NO.
	335J-4
	335K-4
45731-96312	336A-22
	336B-18
	336C-18
	336D-29
	336E-22
	336F-18
	336G-29
	336H-29
	336J-18
	336K-18
	336L-25
	336M-25
	336N-29
	336P-25
	336R-29
	336S-29
	336T-25
	336U-25
47225-87J00	337A-19
	337B-19
	337D-19
	337E-19
47225-88L00	337C-19
	337F-19
	337G-19
	337H-19
	337J-19
	337K-17
	337L-17
	337M-17
	337N-17
	337P-17
	337R-17
47225-89J00	339A-2
	339B-2
	339C-2
47226-89J00	339A-3
	339B-3
	339C-3
47400-87J32	339A-4
	339B-4
	339C-4
48000-88L15	337A-1
	337B-1
	337C-1
	337D-1
	337E-1
	337F-1

PART NO.	FIG.NO.-REF.NO.
	337G-1
	337H-1
	337J-1
48000-88L20	337K-1
	337L-1
	337M-1
	337N-1
	337P-1
	337R-1
48121-88L00	337C-20
	337F-20
	337G-20
	337H-20
	337J-20
48121-88L10	337K-18
	337L-18
	337M-18
	337N-18
	337P-18
	337R-18
48121-89J10	337A-20
	337B-20
	337D-20
	337E-20
	339A-5
	339B-5
	339C-5
48320-87J10	337A-4
	337B-4
	337C-4
	337D-4
	337E-4
	337F-4
	337G-4
	337H-4
	337J-4
	337K-4
	337L-4
	337M-4
	337N-4
	337P-4
	337R-4
48321-89J11	337A-21
	337B-21
	337C-21
	337D-21
	337E-21
	337F-21
	337G-21
	337H-21

PART NO.	FIG.NO.-REF.NO.
	337J-21
	339A-6
	339B-6
	339C-6
48321-89J20	337K-19
	337L-19
	337M-19
	337N-19
	337P-19
	337R-19
48325-89J00	337A-22
	337B-22
	337C-22
	337D-22
	337E-22
	337F-22
	337G-22
	337H-22
	337J-22
	339A-7
	339B-7
	339C-7
48325-89J10	337K-20
	337L-20
	337M-20
	337N-20
	337P-20
	337R-20
48326-87J00	337A-23
	337B-23
	337C-23
	337D-23
	337E-23
	337F-23
	337G-23
	337H-23
	337J-23
	337K-21
	337L-21
	337M-21
	337N-21
	337P-21
	337R-21
48326-89J00	339A-8
	339B-8
	339C-8
48330-87J10	337A-5
	337B-5
	337C-5
	337D-5

PART NO.	FIG.NO.-REF.NO.
	337E-5
	337F-5
	337G-5
	337H-5
	337J-5
48330-87J20	337K-5
	337L-5
	337M-5
	337N-5
	337P-5
	337R-5
48510-97E00	337A-6
	337B-6
	337C-6
	337D-6
	337E-6
	337F-6
	337G-6
	337H-6
	337J-6
48510-97E10	337K-6
	337L-6
	337M-6
	337N-6
	337P-6
	337R-6
48541-87J10	337A-7
	337B-7
	337C-7
	337D-7
	337E-7
	337F-7
	337G-7
	337H-7
	337J-7
48541-87J20	337A-8
	337B-8
	337C-8
	337D-8
	337E-8
	337F-8
	337G-8
	337H-8
	337J-8
	337K-7
	337L-7
	337M-7
	337N-7
	337P-7
	337R-7

PART NO.	FIG.NO.-REF.NO.
48551-88L00	337A-9
	337B-9
	337C-9
	337D-9
	337E-9
	337F-9
	337G-9
	337H-9
	337J-9
48551-88L10	337K-8
	337L-8
	337M-8
	337N-8
	337P-8
	337R-8
48553-88L00	337A-10
	337B-10
	337C-10
	337D-10
	337E-10
	337F-10
	337G-10
	337H-10
	337J-10
	337K-9
	337L-9
	337M-9
	337N-9
	337P-9
	337R-9
48557-87J10	337A-11
	337B-11
	337C-11
	337D-11
	337E-11
	337F-11
	337G-11
	337H-11
	337J-11
	337K-10
	337L-10
	337M-10
	337N-10
	337P-10
	337R-10
48571-88L00	337A-12
	337B-12
	337C-12
	337D-12
	337E-12

PART NO.	FIG.NO.-REF.NO.
	337F-12
	337G-12
	337H-12
	337J-12
	337K-11
	337L-11
	337M-11
	337N-11
	337P-11
	337R-11
48572-87L00	337A-13
	337B-13
	337C-13
	337D-13
	337E-13
	337F-13
	337G-13
	337H-13
	337J-13
	337K-12
	337L-12
	337M-12
	337N-12
	337P-12
	337R-12
48582-97E01	337A-14
	337B-14
	337C-14
	337D-14
	337E-14
	337F-14
	337G-14
	337H-14
	337J-14
48583-87J10	337A-15
	337B-15
	337C-15
	337D-15
	337E-15
	337F-15
	337G-15
	337H-15
	337J-15
	337K-13
	337L-13
	337M-13
	337N-13
	337P-13
	337R-13
48611-88L00	337A-16

PART NO.	FIG.NO.-REF.NO.
	337B-16
	337C-16
	337D-16
	337E-16
	337F-16
	337G-16
	337H-16
	337J-16
	337K-14
	337L-14
	337M-14
	337N-14
	337P-14
	337R-14
48681-87J11	337A-17
	337B-17
	337C-17
	337D-17
	337E-17
	337F-17
	337G-17
	337H-17
	337J-17
	337K-15
	337L-15
	337M-15
	337N-15
	337P-15
	337R-15
48862-87J20	337A-18
	337B-18
	337C-18
	337D-18
	337E-18
	337F-18
	337G-18
	337H-18
	337J-18
	337K-16
	337L-16
	337M-16
	337N-16
	337P-16
	337R-16

50000

PART NO.	FIG.NO.-REF.NO.
51110-88L10-0EP	401A-1-1
	401B-1
	401C-1
	401D-1-1
	401E-1-1
	401F-1
	401G-1-1
	401H-1-1
	401J-1
	401K-1
	401L-1
	401M-1
	401N-1
	401P-1
	401R-1
	401S-1
	401T-1
	401U-1
51110-88L10-Y5S	401A-1-2
	401D-1-2
	401E-1-2
	401G-1-2
	401H-1-2
51122-88L00	401A-8
	401B-8
	401C-8
	401D-8
	401E-8
	401F-8
	401G-8
	401H-8
	401J-8
	401K-8
	401L-8
	401M-8
	401N-8
	401P-8
	401R-8
	401S-8
	401T-8
	401U-8
51123-88L00	401A-9
	401B-9
	401C-9
	401D-9
	401E-9
	401F-9
	401G-9
	401H-9
	401J-9

PART NO.	FIG.NO.-REF.NO.
	401K-9
	401L-9
	401M-9
	401N-9
	401P-9
	401R-9
	401S-9
	401T-9
	401U-9
	585A-10
51170-88L00	401A-14
	401B-14
	401C-14
	401D-14
	401E-14
	401F-14
	401G-14
	401H-14
	401J-14
	401K-14
	401L-14
	401M-14
	401N-14
	401P-14
	401R-14
	401S-14
	401T-14
	401U-14
51211-88L00	401A-2
	401B-2
	401C-2
	401D-2
	401E-2
	401F-2
	401G-2
	401H-2
	401J-2
	401K-2
	401L-2
	401M-2
	401N-2
	401P-2
	401R-2
	401S-2
	401T-2
	401U-2
	585A-9
52111-88L00-0EP	405A-1-1
	405D-1-1
	405E-1-1

PART NO.	FIG.NO.-REF.NO.
	405G-1-1
52111-88L00-Y5S	405A-1-2
	405D-1-2
	405E-1-2
	405G-1-2
52111-88L10-0EP	405A-1-3
	405B-1
	405C-1
	405D-1-3
	405E-1-3
	405F-1
	405G-1-3
	405H-1-1
	405J-1
	405K-1
	405L-1
	405M-1
52111-88L10-Y5S	405A-1-4
	405D-1-4
	405E-1-4
	405G-1-4
	405H-1-2
52111-88L20-0EP	405N-1
	405P-1
	405R-1-1
	405S-1-1
	405T-1-1
	405U-1-1
52111-88L30-0EP	405R-1-2
	405S-1-2
	405T-1-2
	405U-1-2
52131-88L00-0EP	405G-7-1
	405H-7-1
	405J-7
	405K-7
	405L-7
	405M-7
52131-88L00-Y5S	405G-7-2
	405H-7-2
52131-88L11-0EP	405N-7
	405P-7
	405R-7
	405S-7
	405T-7
	405U-7
54114-90J01	401A-20
	401A-22
	401B-20
	401B-22

PART NO.	FIG.NO.-REF.NO.
	401C-20
	401C-22
	401D-20
	401D-22
	401E-20
	401E-22
	401F-20
	401F-22
	401G-20
	401G-22
	401H-20
	401H-22
	401J-20
	401J-22
	401K-20
	401K-22
	401L-20
	401L-22
	401M-20
	401M-22
	401N-20
	401N-22
	401P-20
	401P-22
	401R-20
	401R-22
	401S-20
	401S-22
	401T-20
	401T-22
	401U-20
	401U-22
	405A-14
	405B-14
	405C-14
	405D-14
	405E-14
	405F-14
	405G-18
	405H-18
	405J-18
	405K-18
	405L-18
	405M-18
	405N-20
	405P-20
	405R-21
	405S-21
	405T-21
	405U-21

PART NO.	FIG.NO.-REF.NO.
54120-88L00	401N-17
	401P-17
	401R-17
	401S-17
	401T-17
	401U-17
54121-88L00	401A-23
	401B-23
	401C-23
	401D-23
	401E-23
	401F-23
	401G-23
	401H-23
	401J-23
	401K-23
	401L-23
	401M-23
54123-88L00	401A-24
	401B-24
	401C-24
	401D-24
	401E-24
	401F-24
	401G-24
	401H-24
	401J-24
	401K-24
	401L-24
	401M-24
54124-88L20	401A-17
	401B-17
	401C-17
	401D-17
	401E-17
	401F-17
	401G-17
	401H-17
	401J-17
	401K-17
	401L-17
	401M-17
54130-88L00	401A-18
	401B-18
	401C-18
	401D-18
	401E-18
	401F-18
	401G-18
	401H-18

PART NO.	FIG.NO.-REF.NO.
	401J-18
	401K-18
	401L-18
	401M-18
	401N-18
	401P-18
	401R-18
	401S-18
	401T-18
	401U-18
54137-88L00	401A-12
	401B-12
	401C-12
	401D-12
	401E-12
	401F-12
	401G-12
	401H-12
	401J-12
	401K-12
	401L-12
	401M-12
	401N-12
	401P-12
	401R-12
	401S-12
	401T-12
	401U-12
54151-88L00	405A-8
	405B-8
	405C-8
	405D-8
	405E-8
	405F-8
	405G-12
	405H-12
	405J-12
	405K-12
	405L-12
	405M-12
	405N-14
	405P-14
	405R-15
	405S-15
	405T-15
	405U-15
54160-88L10	405A-9
	405B-9
	405C-9
	405D-9

PART NO.	FIG.NO.-REF.NO.
	405E-9
	405F-9
	405G-13
	405H-13
	405J-13
	405K-13
	405L-13
	405M-13
	405N-15
	405P-15
	405R-16
	405S-16
	405T-16
	405U-16
54166-95J02	401A-19
	401B-19
	401C-19
	401D-19
	401E-19
	401F-19
	401G-19
	401H-19
	401J-19
	401K-19
	401L-19
	401M-19
	401N-19
	401P-19
	401R-19
	401S-19
	401T-19
	401U-19
	405A-12
	405B-12
	405C-12
	405D-12
	405E-12
	405F-12
	405G-16
	405H-16
	405J-16
	405K-16
	405L-16
	405M-16
	405N-18
	405P-18
	405R-19
	405S-19
	405T-19
	405U-19

PART NO.	FIG.NO.-REF.NO.
54167-87L01	405A-10
	405B-10
	405C-10
	405D-10
	405E-10
	405F-10
	405G-14
	405H-14
	405J-14
	405K-14
	405L-14
	405M-14
	405N-16
	405P-16
	405R-17
	405S-17
	405T-17
	405U-17
54180-88L00	405A-11
	405B-11
	405C-11
	405D-11
	405E-11
	405F-11
	405G-15
	405H-15
	405J-15
	405K-15
	405L-15
	405M-15
	405N-17
	405P-17
	405R-18
	405S-18
	405T-18
	405U-18
54211-87J30-0EP	405A-7-1
	405B-7
	405C-7
	405D-7-1
	405E-7-1
	405F-7
	405G-11-1
	405H-11-1
	405J-11
	405K-11
	405L-11
	405M-11
	405N-13
	405P-13

PART NO.	FIG.NO.-REF.NO.
	405R-14
	405S-14
	405T-14
	405U-14
54211-87J30-Y5S	405A-7-2
	405D-7-2
	405E-7-2
	405G-11-2
	405H-11-2
54221-88L20-0EP	405A-4-1
	405B-4
	405C-4
	405D-4-1
	405E-4-1
	405F-4
	405G-4-1
	405H-4-1
	405J-4
	405K-4
	405L-4
	405M-4
	405N-4
	405P-4
	405R-4
	405S-4
	405T-4
	405U-4
54221-88L20-Y5S	405A-4-2
	405D-4-2
	405E-4-2
	405G-4-2
	405H-4-2
54231-88L10-0EP	405A-5-1
	405B-5
	405C-5
	405D-5-1
	405E-5-1
	405F-5
	405G-5-1
	405H-5-1
	405J-5
	405K-5
	405L-5
	405M-5
	405N-5
	405P-5
	405R-5
	405S-5
	405T-5
	405U-5

PART NO.	FIG.NO.-REF.NO.
54231-88L10-Y5S	405A-5-2
	405D-5-2
	405E-5-2
	405G-5-2
	405H-5-2
55100-87J50-0EP	407A-1-1
	407B-1
	407C-1
	407D-1-1
	407E-1-1
	407F-1
	407G-1-1
	407H-1-1
	407J-1
	407K-1
	407L-1
	407M-1
55100-87J50-Y5S	407A-1-2
	407D-1-2
	407E-1-2
	407G-1-2
	407H-1-2
55110-90J15-0EP	407N-1
	407P-1
	407R-1
	407S-1
	407T-1
	407U-1
55122-88L00	220A-29
	220B-29
	220C-29
	220D-29
	220E-29
	220F-29
	220G-29
	220H-29
	220J-29
	220K-29
	220L-29
	220M-29
55125-90J01	407N-3
	407P-3
	407R-3
	407S-3
	407T-3
	407U-3
55125-94400	407A-4
	407B-4
	407C-4
	407D-4

PART NO.	FIG.NO.-REF.NO.
	407E-4
	407F-4
	407G-4
	407H-4
	407J-4
	407K-4
	407L-4
	407M-4
55127-87D00	407N-4
	407P-4
	407R-4
	407S-4
	407T-4
	407U-4
55181-95200	407A-17
	407B-17
	407C-17
	407D-17
	407E-17
	407F-17
	407G-19
	407H-19
	407J-19
	407K-19
	407L-19
	407M-19
	407N-28
	407P-28
	407R-28
	407S-28
	407T-28
	407U-28
55300-95500	407A-18
	407B-18
	407C-18
	407D-18
	407E-18
	407F-18
	407G-20
	407H-20
	407J-20
	407K-20
	407L-20
	407M-20
	407N-27
	407P-27
	407R-27
	407S-27
	407T-27
	407U-27

PART NO.	FIG.NO.-REF.NO.
55320-94900	335D-11
	335G-11
	335H-11
	335L-11
	335M-11
55321-87J00	111A-7-1
	111B-7-1
	111C-7-1
	111D-7-1
	111E-7-1
	111F-7-1
	111G-7-1
	111H-7-1
	111J-7-1
	111K-7-1
	111L-7-1
	111M-7-1
	111N-7-1
	111P-7-1
	111R-7-1
	111S-7-1
	111T-7-1
	111U-7-1
	113A-8
	335A-6
	335B-6
	335C-6
	335E-6
	335F-6
	335J-6
	335K-6
	335N-11
	335P-11
	335R-11
	335S-11
	335T-11
	335U-11
	337A-26
	337B-26
	337C-26
	337D-26
	337E-26
	337F-26
	337G-26
	337H-26
	337J-26
	337K-24
	337L-24
	337M-24
	337N-24

PART NO.	FIG.NO.-REF.NO.
	337P-24
	337R-24
	339A-9
	339B-9
	339C-9
	405N-11
	405P-11
	405R-12
	405S-12
	405T-12
	405U-12
55321-87J10	111A-7-2
	111B-7-2
	111C-7-2
	111D-7-2
	111E-7-2
	111F-7-2
	111G-7-2
	111H-7-2
	111J-7-2
	111K-7-2
	111L-7-2
	111M-7-2
	111N-7-2
	111P-7-2
	111R-7-2
	111S-7-2
	111T-7-2
	111U-7-2
	160N-22
	160P-22
	160R-22
	160S-21
	160T-22
	160U-21
	407A-19
	407B-19
	407C-19
	407D-19
	407E-19
	407F-19
	407G-21
	407H-21
	407J-21
	407K-21
	407L-21
	407M-21
55321-90J01	407N-5
	407P-5
	407R-5

PART NO.	FIG.NO.-REF.NO.
	407S-5
	407T-5
	407U-5
55332-87D11	407N-6
	407P-6
	407R-6
	407S-6
	407T-6
	407U-6
55333-87D10	407N-7
	407P-7
	407R-7
	407S-7
	407T-7
	407U-7
56120-90J02-0EP	220N-19
	220P-19
	220R-19
	220S-19
	220T-19
	220U-19
56120-94321-0EP	220A-20-1
	220B-20
	220C-20
	220D-20-1
	220E-20-1
	220F-20
	220G-20-1
	220H-20-1
	220J-20
	220K-20
	220L-20
	220M-20
56120-94321-Y5S	220A-20-2
	220D-20-2
	220E-20-2
	220G-20-2
	220H-20-2
56123-90J00	220N-20
	220P-20
	220R-20
	220S-20
	220T-20
	220U-20
56130-87E00	220N-27
	220P-27
	220R-27
	220S-27
	220T-27
	220U-27

PART NO.	FIG.NO.-REF.NO.
56130-87J11-0EP	220A-26-1
	220B-26
	220C-26
	220D-26-1
	220E-26-1
	220F-26
	220G-26-1
	220H-26-1
	220J-26
	220K-26
	220L-26
	220M-26
56130-87J11-Y5S	220A-26-2
	220D-26-2
	220E-26-2
	220G-26-2
	220H-26-2
56145-99E01	407N-29
	407P-29
	407R-29
	407S-29
	407T-29
	407U-29
57110-88L02	220A-1-1
	220D-1-1
	220E-1-1
	220G-1-1
57110-88L12	220A-1-2
	220B-1
	220C-1
	220D-1-2
	220E-1-2
	220F-1
	220G-1-2
	220H-1-1
	220J-1-1
	220K-1-1
	220L-1-1
	220M-1-1
57110-88L22	220G-1-3
	220H-1-2
	220J-1-2
	220K-1-2
	220L-1-2
	220M-1-2
57110-88L30	220N-1
	220P-1
	220R-1-1
	220S-1-1
	220T-1-1

PART NO.	FIG.NO.-REF.NO.
	220U-1-1
57110-88L40	220R-1-2
	220S-1-2
	220T-1-2
	220U-1-2
57130-94301	405G-10
	405H-10
	405J-10
	405K-10
	405L-10
	405M-10
	405R-11
	405S-11
	405T-11
	405U-11
57133-88L01	220A-2
	220B-2
	220C-2
	220D-2
	220E-2
	220F-2
	220G-2
	220H-2
	220J-2
	220K-2
	220L-2
	220M-2
57133-90J02	220N-2
	220P-2
	220R-2
	220S-2
	220T-2
	220U-2
57133-94400	220A-3
	220B-3
	220C-3
	220D-3
	220E-3
	220F-3
	220G-3
	220H-3
	220J-3
	220K-3
	220L-3
	220M-3
57300-88810	220A-6
	220B-6
	220C-6
	220D-6
	220E-6

PART NO.	FIG.NO.-REF.NO.
	220F-6
	220G-6
	220H-6
	220J-6
	220K-6
	220L-6
	220M-6
57300-99824	220N-4
	220P-4
	220R-4
	220S-4
	220T-4
	220U-4
57610-88L10	220N-11
	220P-11
	220R-11
	220S-11
	220T-11
	220U-11
57610-94402	220A-13
	220B-13
	220C-13
	220D-13
	220E-13
	220F-13
	220G-13
	220H-13
	220J-13
	220K-13
	220L-13
	220M-13
57621-87J02	220A-14
	220B-14
	220C-14
	220D-14
	220E-14
	220F-14
	220G-14
	220H-14
	220J-14
	220K-14
	220L-14
	220M-14
57621-88L00	220N-12
	220P-12
	220R-12
	220S-12
	220T-12
	220U-12
57630-90J00	407N-26

PART NO.	FIG.NO.-REF.NO.
	407P-26
	407R-26
	407S-26
	407T-26
	407U-26
57630-94300	407A-16
	407B-16
	407C-16
	407D-16
	407E-16
	407F-16
	407G-18
	407H-18
	407J-18
	407K-18
	407L-18
	407M-18
57631-95303	220A-19
	220B-19
	220C-19
	220D-19
	220E-19
	220F-19
	220G-19
	220H-19
	220J-19
	220K-19
	220L-19
	220M-19
57631-99E01	220N-14
	220P-14
	220R-14
	220S-14
	220T-14
	220U-14
57632-95320	407A-11
	407B-11
	407C-11
	407D-11
	407E-11
	407F-11
	407G-13
	407H-13
	407J-13
	407K-13
	407L-13
	407M-13
57633-90J02	407N-21
	407P-21
	407R-21

PART NO.	FIG.NO.-REF.NO.
	407S-21
	407T-21
	407U-21
57633-94300	407A-12
	407B-12
	407C-12
	407D-12
	407E-12
	407F-12
	407G-14
	407H-14
	407J-14
	407K-14
	407L-14
	407M-14
57634-88L00	220A-16
	220B-16
	220C-16
	220D-16
	220E-16
	220F-16
	220G-16
	220H-16
	220J-16
	220K-16
	220L-16
	220M-16
57635-90J01	407N-22
	407P-22
	407R-22
	407S-22
	407T-22
	407U-22
58100-87LA0-019	407N-19-1
	407P-19-1
	407R-19-1
	407S-19-1
	407T-19-1
	407U-19-1
58100-87LB0-019	407N-19-2
	407P-19-2
	407R-19-2
	407S-19-2
	407T-19-2
	407U-19-2
58100-87LC0-019	407N-19-3
	407P-19-3
	407R-19-3
	407S-19-3
	407T-19-3

PART NO.	FIG.NO.-REF.NO.
	407U-19-3
58100-87LG1-019	407N-19-6
	407P-19-6
	407R-19-6
	407S-19-6
	407T-19-6
	407U-19-6
58100-87LH0-019	407N-19-5
	407P-19-5
	407R-19-5
	407S-19-5
	407T-19-5
	407U-19-5
58100-87LJ0-019	407N-19-4
	407P-19-4
	407R-19-4
	407S-19-4
	407T-19-4
	407U-19-4
58100-88L03-019	407A-9-1
	407B-9-1
	407C-9-1
	407D-9-1
	407E-9-1
	407F-9-1
	407G-11-1
	407H-11-1
	407J-11-1
	407K-11-1
	407L-11-1
	407M-11-1
58100-88L13-019	407A-9-2
	407B-9-2
	407C-9-2
	407D-9-2
	407E-9-2
	407F-9-2
	407G-11-2
	407H-11-2
	407J-11-2
	407K-11-2
	407L-11-2
	407M-11-2
58100-88L23-019	407A-9-3
	407B-9-3
	407C-9-3
	407D-9-3
	407E-9-3
	407F-9-3
	407G-11-3

PART NO.	FIG.NO.-REF.NO.
	407H-11-3
	407J-11-3
	407K-11-3
	407L-11-3
	407M-11-3
58100-88L52-019	407A-9-6
	407B-9-6
	407C-9-6
	407D-9-6
	407E-9-6
	407F-9-6
	407G-11-6
	407H-11-6
	407J-11-6
	407K-11-6
	407L-11-6
	407M-11-6
58100-88L62-019	407A-9-7
	407B-9-7
	407C-9-7
	407D-9-7
	407E-9-7
	407F-9-7
	407G-11-7
	407H-11-7
	407J-11-7
	407K-11-7
	407L-11-7
	407M-11-7
58100-88L72-019	407A-9-8
	407B-9-8
	407C-9-8
	407D-9-8
	407E-9-8
	407F-9-8
	407G-11-8
	407H-11-8
	407J-11-8
	407K-11-8
	407L-11-8
	407M-11-8
58100-88L83-019	407A-9-9
	407B-9-9
	407C-9-9
	407D-9-9
	407E-9-9
	407F-9-9
	407G-11-9
	407H-11-9
	407J-11-9

PART NO.	FIG.NO.-REF.NO.
	407K-11-9
	407L-11-9
	407M-11-9
58100-88LA0-019	407A-9-4
	407B-9-4
	407C-9-4
	407D-9-4
	407E-9-4
	407F-9-4
	407G-11-4
	407H-11-4
	407J-11-4
	407K-11-4
	407L-11-4
	407M-11-4
58100-88LB0-019	407A-9-5
	407B-9-5
	407C-9-5
	407D-9-5
	407E-9-5
	407F-9-5
	407G-11-5
	407H-11-5
	407J-11-5
	407K-11-5
	407L-11-5
	407M-11-5
58105-90J00	407N-20
	407P-20
	407R-20
	407S-20
	407T-20
	407U-20
58120-88L01	407A-10
	407B-10
	407C-10
	407D-10
	407E-10
	407F-10
	407G-12
	407H-12
	407J-12
	407K-12
	407L-12
	407M-12
58200-88L30	407A-9-10
	407B-9-10
	407C-9-10
	407D-9-10
	407E-9-10

PART NO.	FIG.NO.-REF.NO.	PART NO.	FIG.NO.-REF.NO.	PART NO.	FIG.NO.-REF.NO.
	407F-9-10		410U-24		420N-1
	407G-11-10	61134-88L10	410A-2		420P-1
	407H-11-10		410B-2		420R-1
	407J-11-10		410C-2		420S-1
	407K-11-10		410D-2		420T-1
	407L-11-10		410E-2		420U-1
	407M-11-10		410F-2	61400-88811-Y5S	420A-1-2
			410G-2		420D-1-2
			410H-2		420E-1-2
			410J-2		420G-1-2
			410K-2		420H-1-2
			410L-2	61412-88L00	410A-11
60000			410M-2		410B-11
			410N-2		410C-11
			410P-2		410D-11
61112-88L10	410A-1		410R-2		410E-11
	410B-1		410S-2		410F-11
	410C-1		410T-2		410G-11
	410D-1		410U-2		410H-11
	410E-1	61151-88L00	410A-6		410J-11
	410F-1		410B-6		410K-11
	410G-1		410C-6		410L-11
	410H-1		410D-6		410M-11
	410J-1		410E-6		410N-11
	410K-1		410F-6		410P-11
	410L-1		410G-6		410R-11
	410M-1		410H-6		410S-11
	410N-1		410J-6		410T-11
	410P-1		410K-6		410U-11
	410R-1		410L-6	61431-88L10-0EP	420A-2-1
	410S-1		410M-6		420B-2
	410T-1		410N-6		420C-2
	410U-1		410P-6		420D-2-1
61124-88L10	410A-24		410R-6		420E-2-1
	410B-24		410S-6		420F-2
	410C-24		410T-6		420G-2-1
	410D-24		410U-6		420H-2-1
	410E-24	61188-88L00	432A-11		420J-2
	410F-24	61400-88805-0EP	420A-1-1		420K-2
	410G-24		420B-1		420L-2
	410H-24		420C-1		420M-2
	410J-24		420D-1-1		420N-2
	410K-24		420E-1-1		420P-2
	410L-24		420F-1		420R-2
	410M-24		420G-1-1		420S-2
	410N-24		420H-1-1		420T-2
	410P-24		420J-1		420U-2
	410R-24		420K-1	61431-88L10-Y5S	420A-2-2
	410S-24		420L-1		420D-2-2
	410T-24		420M-1		420E-2-2

PART NO.	FIG.NO.-REF.NO.	PART NO.	FIG.NO.-REF.NO.	PART NO.	FIG.NO.-REF.NO.
	420G-2-2		420C-3		420T-9
	420H-2-2		420D-3		420U-9
61435-88L02	420A-12-1		420E-3	61443-88L10	420A-9-2
	420A-13-1		420F-3		420D-9-2
	420B-12		420G-3		420E-9-2
	420B-13		420H-3		420G-9-2
	420C-12		420J-3		420H-9-2
	420C-13		420K-3	61453-88L02	420A-10-1
	420D-12-1		420L-3		420B-10
	420D-13-1		420M-3		420C-10
61435-88L12	420E-12-1		420N-3		420D-10-1
	420E-13-1		420P-3		420E-10-1
	420F-12		420R-3		420F-10
	420F-13		420S-3		420G-10-1
	420N-12		420T-3		420H-10-1
	420N-13		420U-3		420J-10
	420P-12	61439-88L00	420A-4		420K-10
	420P-13		420B-4		420L-10
61435-88L22	420G-12-1		420C-4		420M-10
	420G-13-1		420D-4		420N-10
	420H-12-1		420E-4		420P-10
	420H-13-1		420F-4		420R-10
	420J-12		420G-4		420S-10
	420J-13		420H-4		420T-10
	420K-12		420J-4		420U-10
	420K-13		420K-4	61453-88L10	420A-10-2
	420L-12		420L-4		420D-10-2
	420L-13		420M-4		420E-10-2
	420M-12		420N-4		420G-10-2
	420M-13		420P-4		420H-10-2
	420R-12		420R-4	61458-90J00	420A-14
	420R-13		420S-4		420B-14
	420S-12		420T-4		420C-14
	420S-13		420U-4		420D-14
	420T-12	61443-88L02	420A-9-1		420E-14
	420T-13		420B-9		420F-14
	420U-12		420C-9		420G-14
	420U-13		420D-9-1		420H-14
61435-88L30	420A-12-2		420E-9-1		420J-14
	420A-13-2		420F-9		420K-14
	420D-12-2		420G-9-1		420L-14
	420D-13-2		420H-9-1		420M-14
61435-88L40	420E-12-2		420J-9		420N-14
	420E-13-2		420K-9		420P-14
61435-88L50	420G-12-2		420L-9		420R-14
	420G-13-2		420M-9		420S-14
	420H-12-2		420N-9		420T-14
	420H-13-2		420P-9		420U-14
61438-88L00	420A-3		420R-9	61471-98J00	420A-15
	420B-3		420S-9		420B-15

PART NO.	FIG.NO.-REF.NO.
	420C-15
	420D-15
	420E-15
	420F-15
	420G-15
	420H-15
	420J-15
	420K-15
	420L-15
	420M-15
	420N-15
	420P-15
	420R-15
	420S-15
	420T-15
	420U-15
61472-88L00	136A-10
61473-88L00	420N-20
	420P-20
	420R-20
	420S-20
	420T-20
	420U-20
61476-88L00	420A-6
	420B-6
	420C-6
	420D-6
	420E-6
	420F-6
	420G-6
	420H-6
	420J-6
	420K-6
	420L-6
	420M-6
	420N-6
	420P-6
	420R-6
	420S-6
	420T-6
	420U-6
61494-88L01	136A-12
61610-95J00	420A-7
	420B-7
	420C-7
	420D-7
	420E-7
	420F-7
	420G-7
	420H-7

PART NO.	FIG.NO.-REF.NO.
	420J-7
	420K-7
	420L-7
	420M-7
	420N-7
	420P-7
	420R-7
	420S-7
	420T-7
	420U-7
61632-93J00	410A-13
	410B-13
	410C-13
	410D-13
	410E-13
	410F-13
	410G-13
	410H-13
	410J-13
	410K-13
	410L-13
	410M-13
	410N-13
	410P-13
	410R-13
	410S-13
	410T-13
	410U-13
61633-88L00	410A-16
	410B-16
	410C-16
	410D-16
	410E-16
	410F-16
	410G-16
	410H-16
	410J-16
	410K-16
	410L-16
	410M-16
	410N-16
	410P-16
	410R-16
	410S-16
	410T-16
	410U-16
61641-88L00	410A-14
	410B-14
	410C-14
	410D-14

PART NO.	FIG.NO.-REF.NO.
	410E-14
	410F-14
	410G-14
	410H-14
	410J-14
	410K-14
	410L-14
	410M-14
	410N-14
	410P-14
	410R-14
	410S-14
	410T-14
	410U-14
61673-93J11	410A-22
	410B-22
	410C-22
	410D-22
	410E-22
	410F-22
	410G-22
	410H-22
	410J-22
	410K-22
	410L-22
	410M-22
	410N-22
	410P-22
	410R-22
	410S-22
	410T-22
	410U-22
61811-88L20-0EP	410A-3-3
	410B-3
	410C-3
	410D-3-3
	410E-3-3
	410F-3
	410G-3-3
	410H-3-1
	410J-3
	410K-3
	410L-3
	410M-3
	410R-3-2
	410S-3-2
	410T-3-2
	410U-3-2
61811-88L20-Y5S	410A-3-4
	410D-3-4

PART NO.	FIG.NO.-REF.NO.
	410E-3-4
	410G-3-4
	410H-3-2
61811-88L30-0EP	410A-3-1
	410D-3-1
	410E-3-1
	410G-3-1
	410N-3
	410P-3
	410R-3-1
	410S-3-1
	410T-3-1
	410U-3-1
61811-88L30-Y5S	410A-3-2
	410D-3-2
	410E-3-2
	410G-3-2
61821-88L20-0EP	410A-4-3
	410B-4
	410C-4
	410D-4-3
	410E-4-3
	410F-4
	410G-4-3
	410H-4-1
	410J-4
	410K-4
	410L-4
	410M-4
	410R-4-2
	410S-4-2
	410T-4-2
	410U-4-2
61821-88L20-Y5S	410A-4-4
	410D-4-4
	410E-4-4
	410G-4-4
	410H-4-2
61821-88L30-0EP	410A-4-1
	410D-4-1
	410E-4-1
	410G-4-1
	410N-4
	410P-4
	410R-4-1
	410S-4-1
	410T-4-1
	410U-4-1
61821-88L30-Y5S	410A-4-2
	410D-4-2

PART NO.	FIG.NO.-REF.NO.
	410E-4-2
	410G-4-2
61831-88L10-0EP	410A-7-1
	410B-7
	410C-7
	410D-7-1
	410E-7-1
	410F-7
	410G-7-1
	410H-7-1
	410J-7
	410K-7
	410L-7
	410M-7
	410N-7
	410P-7
	410R-7
	410S-7
	410T-7
	410U-7
61831-88L10-Y5S	410A-7-2
	410D-7-2
	410E-7-2
	410G-7-2
	410H-7-2
63002-88L11-0EP	570B-1
	570D-1
	570E-1
	570F-1
	570G-1
	570H-1
63002-88L21-0EP	570A-1
	570C-1
63110-88L21-0EP	444B-2
	444C-2
	444F-2
	444G-2
	444H-2
	444J-2
	444K-2
63110-88L31-0EP	444A-2
	444D-2
	444E-2
63111-88L00-0EP	444A-63
	444B-64
	444C-64
	444D-63
	444E-63
	444F-64
	444G-64

PART NO.	FIG.NO.-REF.NO.
	444H-64
	444J-64
	444K-64
	570A-77
	570B-78
	570C-77
	570D-78
	570E-78
	570F-78
	570G-78
	570H-78
63115-88L00	444A-68
	444B-69
	444C-69
	444D-68
	444E-68
	444F-69
	444G-69
	444H-69
	444J-69
	444K-69
	570A-65
	570B-65
	570C-65
	570D-65
	570E-65
	570F-65
	570G-65
	570H-65
63121-88L00	444A-15
	444B-16
	444C-16
	444D-15
	444E-15
	444F-16
	444G-16
	444H-16
	444J-16
	444K-16
	570A-15
	570B-15
	570C-15
	570D-15
	570E-15
	570F-15
	570G-15
	570H-15
63132-88L00	444A-73
	444B-74
	444C-74

PART NO.	FIG.NO.-REF.NO.
	444D-73
	444E-73
	444F-75
	444G-75
	444H-75
	444J-75
	444K-75
	570A-69
	570B-70
	570C-69
	570D-70
	570E-70
	570F-70
	570G-70
	570H-70
63210-88L00	444A-16
	444B-17
	444C-17
	444D-16
	444E-16
	444F-17
	444G-17
	444H-17
	444J-17
	444K-17
	570A-16
	570B-16
	570C-16
	570D-16
	570E-16
	570F-16
	570G-16
	570H-16
63215-93110	444A-71
	444B-72
	444C-72
	444D-71
	444E-71
	444F-72
	444G-72
	444H-72
	444J-72
	444K-72
	570A-67
	570B-67
	570C-67
	570D-67
	570E-67
	570F-67
	570G-67

PART NO.	FIG.NO.-REF.NO.
	570H-67
63221-88L00	444A-17
	444B-18
	444C-18
	444D-17
	444E-17
	444F-18
	444G-18
	444H-18
	444J-18
	444K-18
	570A-17
	570B-17
	570C-17
	570D-17
	570E-17
	570F-17
	570G-17
	570H-17
63223-92D00	444A-18
	444B-19
	444C-19
	444D-18
	444E-18
	444F-19
	444G-19
	444H-19
	444J-19
	444K-19
	570A-18
	570B-18
	570C-18
	570D-18
	570E-18
	570F-18
	570G-18
	570H-18
63225-88L00	444A-19
	444B-20
	444C-20
	444D-19
	444E-19
	444F-20
	444G-20
	444H-20
	444J-20
	444K-20
	570A-19
	570B-19
	570C-19

PART NO.	FIG.NO.-REF.NO.
	570D-19
	570E-19
	570F-19
	570G-19
	570H-19
63227-93200	444A-20
	444B-21
	444C-21
	444D-20
	444E-20
	444F-21
	444G-21
	444H-21
	444J-21
	444K-21
	570A-20
	570B-20
	570C-20
	570D-20
	570E-20
	570F-20
	570G-20
	570H-20
63235-88L00	444A-21
	444B-22
	444C-22
	444D-21
	444E-21
	444F-22
	444G-22
	444H-22
	444J-22
	444K-22
	570A-21
	570B-21
	570C-21
	570D-21
	570E-21
	570F-21
	570G-21
	570H-21
63244-99J00	444A-52
	444B-53
	444C-53
	444D-52
	444E-52
	444F-53
	444G-53
	444H-53
	444J-53

PART NO.	FIG.NO.-REF.NO.
	444K-53
	570A-52
	570B-52
	570C-52
	570D-52
	570E-52
	570F-52
	570G-52
	570H-52
63245-99J00	444A-53
	444B-54
	444C-54
	444D-53
	444E-53
	444F-54
	444G-54
	444H-54
	444J-54
	444K-54
	570A-53
	570B-53
	570C-53
	570D-53
	570E-53
	570F-53
	570G-53
	570H-53
63246-88L00	444A-22
	444B-23
	444C-23
	444D-22
	444E-22
	444F-23
	444G-23
	444H-23
	444J-23
	444K-23
	570A-22
	570B-22
	570C-22
	570D-22
	570E-22
	570F-22
	570G-22
	570H-22
63247-99J00	444A-62
	444B-63
	444C-63
	444D-62
	444E-62

PART NO.	FIG.NO.-REF.NO.
	444F-63
	444G-63
	444H-63
	444J-63
	444K-63
	570A-76
	570B-77
	570C-76
	570D-77
	570E-77
	570F-77
	570G-77
	570H-77
63248-99J00	444A-30
	444B-31
	444C-31
	444D-30
	444E-30
	444F-31
	444G-31
	444H-31
	444J-31
	444K-31
	570A-30
	570B-30
	570C-30
	570D-30
	570E-30
	570F-30
	570G-30
	570H-30
63250-88L00	444A-23
	444B-24
	444C-24
	444D-23
	444E-23
	444F-24
	444G-24
	444H-24
	444J-24
	444K-24
	570A-23
	570B-23
	570C-23
	570D-23
	570E-23
	570F-23
	570G-23
	570H-23
63251-87J00	444A-24

PART NO.	FIG.NO.-REF.NO.
	444B-25
	444C-25
	444D-24
	444E-24
	444F-25
	444G-25
	444H-25
	444J-25
	444K-25
	570A-24
	570B-24
	570C-24
	570D-24
	570E-24
	570F-24
	570G-24
	570H-24
63251-88L90	444A-56
	444B-57
	444C-57
	444D-56
	444E-56
	444F-57
	444G-57
	444H-57
	444J-57
	444K-57
	570A-70
	570B-71
	570C-70
	570D-71
	570E-71
	570F-71
	570G-71
	570H-71
63258-88L00	444A-59
	444B-60
	444C-60
	444D-59
	444E-59
	444F-60
	444G-60
	444H-60
	444J-60
	444K-60
	570A-73
	570B-74
	570C-73
	570D-74
	570E-74

PART NO.	FIG.NO.-REF.NO.
	570F-74
	570G-74
	570H-74
63260-88L00	444A-25
	444B-26
	444C-26
	444D-25
	444E-25
	444F-26
	444G-26
	444H-26
	444J-26
	444K-26
	570A-25
	570B-25
	570C-25
	570D-25
	570E-25
	570F-25
	570G-25
	570H-25
63261-87J00	444A-31
	444B-32
	444C-32
	444D-31
	444E-31
	444F-32
	444G-32
	444H-32
	444J-32
	444K-32
	570A-31
	570B-31
	570C-31
	570D-31
	570E-31
	570F-31
	570G-31
	570H-31
63262-87J00	444A-28
	444B-29
	444C-29
	444D-28
	444E-28
	444F-29
	444G-29
	444H-29
	444J-29
	444K-29
	570A-28

PART NO.	FIG.NO.-REF.NO.
	570B-28
	570C-28
	570D-28
	570E-28
	570F-28
	570G-28
	570H-28
63271-87J00	444A-29
	444B-30
	444C-30
	444D-29
	444E-29
	444F-30
	444G-30
	444H-30
	444J-30
	444K-30
	570A-29
	570B-29
	570C-29
	570D-29
	570E-29
	570F-29
	570G-29
	570H-29
63272-87J00	444A-26
	444B-27
	444C-27
	444D-26
	444E-26
	444F-27
	444G-27
	444H-27
	444J-27
	444K-27
	570A-26
	570B-26
	570C-26
	570D-26
	570E-26
	570F-26
	570G-26
	570H-26
63273-87J00	444A-27
	444B-28
	444C-28
	444D-27
	444E-27
	444F-28
	444G-28

PART NO.	FIG.NO.-REF.NO.
	444H-28
	444J-28
	444K-28
	570A-27
	570B-27
	570C-27
	570D-27
	570E-27
	570F-27
	570G-27
	570H-27
63274-87J00	444A-32
	444B-33
	444C-33
	444D-32
	444E-32
	444F-33
	444G-33
	444H-33
	444J-33
	444K-33
	570A-32
	570B-32
	570C-32
	570D-32
	570E-32
	570F-32
	570G-32
	570H-32
63610-88L00	444A-33
	444B-34
	444C-34
	444D-33
	444E-33
	444F-34
	444G-34
	444H-34
	444J-34
	444K-34
	570A-33
	570B-33
	570C-33
	570D-33
	570E-33
	570F-33
	570G-33
	570H-33
63611-88L00	444A-43
	444B-43
	444C-43

PART NO.	FIG.NO.-REF.NO.
	444D-43
	444E-43
	444F-43
	444G-43
	444H-43
	444J-43
	444K-43
	570A-42
	570B-42
	570C-42
	570D-42
	570E-42
	570F-42
	570G-42
	570H-42
63612-87J00	444A-44
	444B-44
	444C-44
	444D-44
	444E-44
	444F-44
	444G-44
	444H-44
	444J-44
	444K-44
	570A-43
	570B-43
	570C-43
	570D-43
	570E-43
	570F-43
	570G-43
	570H-43
63612-88L10	444A-54
	444B-55
	444C-55
	444D-54
	444E-54
	444F-55
	444G-55
	444H-55
	444J-55
	444K-55
	570A-54
	570B-54
	570C-54
	570D-54
	570E-54
	570F-54
	570G-54

PART NO.	FIG.NO.-REF.NO.
	570H-54
63626-88L00	444A-35
	444B-36
	444C-36
	444D-35
	444E-35
	444F-36
	444G-36
	444H-36
	444J-36
	444K-36
	570A-35
	570B-35
	570C-35
	570D-35
	570E-35
	570F-35
	570G-35
	570H-35
65000-95D01	432A-1
65520-95D01	432A-2
65561-95D00	432A-3
65700-90J14	432A-8
65740-95D01	432A-7
65750-955L0	432A-9
65770-90J11	432A-10
65793-88L00	444A-77
	444B-78
	444C-78
	444D-77
	444E-77
	444F-79
	444G-79
	444H-79
	444J-79
	444K-79
	570A-79
	570B-80
	570C-79
	570D-80
	570E-80
	570F-80
	570G-80
	570H-80
65831-95D00	432A-4
65890-95D00	432A-5
65892-95D00	432A-6
67200-93J13	544A-1
	545A-1
67200-93J50	508A-1

PART NO.	FIG.NO.-REF.NO.
	508B-1
	508C-1
	508D-1
	508E-1
	508F-1
	508G-1
	508H-1
67211-93J00	544A-27
67212-95600	508A-14
	508B-14
	508C-14
	508D-14
	508E-14
	508F-14
	508G-14
	508H-14
67220-95630	508A-16
	508B-16
	508C-16
	508D-16
	508E-16
	508F-16
	508G-16
	508H-16
67221-92E00	545A-8
67222-92E00	545A-2
67223-92E00	545A-3
67223-99E10	508A-17
	508B-17
	508C-17
	508D-17
	508E-17
	508F-17
	508G-17
	508H-17
67224-92E00	545A-9
67226-92E00	545A-15
67226-92E10	545A-16
67227-92E00	545A-24
67228-92E00	545A-18
67229-95600	508A-18
	508B-18
	508C-18
	508D-18
	508E-18
	508F-18
	508G-18
	508H-18
67230-92E00	545A-20
67231-92E00	545A-41

PART NO.	FIG.NO.-REF.NO.
67232-95600	508A-19
	508B-19
	508C-19
	508D-19
	508E-19
	508F-19
	508G-19
	508H-19
	545A-42
67232-95620	545A-28
67233-92E00	545A-26
67234-92E00	545A-22
67235-92E00	545A-27
67236-92E00	545A-32
67237-92E01	545A-33
67238-87D00	508A-20
	508B-20
	508C-20
	508D-20
	508E-20
	508F-20
	508G-20
	508H-20
67238-92E00	545A-34
67239-92E00	545A-35
67239-92E10	545A-45
67240-92E00	545A-17
67241-92E10	545A-43
67241-99E10	508A-21
	508B-21
	508C-21
	508D-21
	508E-21
	508F-21
	508G-21
	508H-21
67243-92E00	545A-44
67243-95600	508A-22
	508B-22
	508C-22
	508D-22
	508E-22
	508F-22
	508G-22
	508H-22
67244-95600	508A-23
	508B-23
	508C-23
	508D-23
	508E-23

PART NO.	FIG.NO.-REF.NO.
	508F-23
	508G-23
	508H-23
67245-92E00	545A-23
67245-95600	508A-24
	508B-24
	508C-24
	508D-24
	508E-24
	508F-24
	508G-24
	508H-24
67246-92E00	545A-36
67251-93J00	544A-12
67251-99E20	508A-25
	508B-25
	508C-25
	508D-25
	508E-25
	508F-25
	508G-25
	508H-25
67252-92E10	545A-39
67252-95600	508A-26
	508B-26
	508C-26
	508D-26
	508E-26
	508F-26
	508G-26
	508H-26
67253-92E00	544A-15
67253-92E10	545A-38
67253-95600	508A-27
	508B-27
	508C-27
	508D-27
	508E-27
	508F-27
	508G-27
	508H-27
	545A-40
67255-99E10	508A-28
	508B-28
	508C-28
	508D-28
	508E-28
	508F-28
	508G-28
	508H-28

PART NO.	FIG.NO.-REF.NO.
67256-95600	508A-29
	508B-29
	508C-29
	508D-29
	508E-29
	508F-29
	508G-29
	508H-29
67257-92E00	544A-11
67257-99E10	508A-30
	508B-30
	508C-30
	508D-30
	508E-30
	508F-30
	508G-30
	508H-30
67258-99E00	508A-31
	508B-31
	508C-31
	508D-31
	508E-31
	508F-31
	508G-31
	508H-31
67259-87D00	508A-32
	508B-32
	508C-32
	508D-32
	508E-32
	508F-32
	508G-32
	508H-32
67261-93J00	544A-2
67261-99E10	508A-33
	508B-33
	508C-33
	508D-33
	508E-33
	508F-33
	508G-33
	508H-33
67263-88L00	444A-36
	444D-36
	444E-36
67263-93J00	544A-3
67264-95600	508A-35
	508B-35
	508C-35
	508D-35

PART NO.	FIG.NO.-REF.NO.
	508E-35
	508F-35
	508G-35
	508H-35
67267-93J00	508A-36
	508B-36
	508C-36
	508D-36
	508E-36
	508F-36
	508G-36
	508H-36
67269-92E00	545A-29
67271-92E00	544A-26
67273-92E00	544A-23
67273-95600	508A-37
	508B-37
	508C-37
	508D-37
	508E-37
	508F-37
	508G-37
	508H-37
	544A-22
67274-92E00	544A-24
67275-95600	508A-38
	508B-38
	508C-38
	508D-38
	508E-38
	508F-38
	508G-38
	508H-38
	544A-21
67281-93J00	544A-17
67282-94L00	508A-52
	508B-52
	508C-52
	508D-52
	508E-52
	508F-52
	508G-52
	508H-52
67284-94L00	508A-53
	508B-53
	508C-53
	508D-53
	508E-53
	508F-53
	508G-53

PART NO.	FIG.NO.-REF.NO.
	508H-53
67286-92E00	545A-19
67287-92E00	544A-20
67288-92E00	545A-4
67288-92E10	545A-6
67288-92E20	544A-7
67288-92E30	544A-14
67288-92E40	544A-10
67291-92E00	545A-7
67291-92E10	545A-37
67292-87J00	444A-37
	444B-37
	444C-37
	444D-37
	444E-37
	444F-37
	444G-37
	444H-37
	444J-37
	444K-37
	570A-36
	570B-36
	570C-36
	570D-36
	570E-36
	570F-36
	570G-36
	570H-36
67292-94300	508A-39
	508B-39
	508C-39
	508D-39
	508E-39
	508F-39
	508G-39
	508H-39
	545A-5
67294-92E00	545A-10
67294-95600	508A-40
	508B-40
	508C-40
	508D-40
	508E-40
	508F-40
	508G-40
	508H-40
67295-92E00	544A-8
67295-92E10	544A-5
67296-88D10	544A-6
	545A-13

PART NO.	FIG.NO.-REF.NO.
	545A-30
67296-90J00	508A-41
	508B-41
	508C-41
	508D-41
	508E-41
	508F-41
	508G-41
	508H-41
67296-92E11	508A-15
	508B-15
	508C-15
	508D-15
	508E-15
	508F-15
	508G-15
	508H-15
	545A-12
67296-92E20	545A-14
67296-92E30	544A-18
67296-92E60	544A-13
67296-92E70	544A-9
	544A-28
67296-94300	508A-42
	508B-42
	508C-42
	508D-42
	508E-42
	508F-42
	508G-42
	508H-42
67296-94310	508A-34
	508B-34
	508C-34
	508D-34
	508E-34
	508F-34
	508G-34
	508H-34
67296-95600	508A-43
	508B-43
	508C-43
	508D-43
	508E-43
	508F-43
	508G-43
	508H-43
67296-95610	508A-44
	508B-44
	508C-44

PART NO.	FIG.NO.-REF.NO.
	508D-44
	508E-44
	508F-44
	508G-44
	508H-44
	544A-25
67297-95600	508A-45
	508B-45
	508C-45
	508D-45
	508E-45
	508F-45
	508G-45
	508H-45
67320-93J00	508A-54-1
	508B-54-1
	508C-54-1
	508D-54-1
	508E-54-1
	508F-54-1
	508G-54-1
	508H-54-1
	515A-1-1
	515B-1-1
	515C-1-1
	515D-1-1
	515E-1-1
	515F-1-1
	515G-1-1
	515H-1-1
	515J-1-1
	515K-1-1
67320-93J10	508A-54-2
	508B-54-2
	508C-54-2
	508D-54-2
	508E-54-2
	508F-54-2
	508G-54-2
	508H-54-2
	515A-1-2
	515B-1-2
	515C-1-2
	515D-1-2
	515E-1-2
	515F-1-2
	515G-1-2
	515H-1-2
	515J-1-2
	515K-1-2

PART NO.	FIG.NO.-REF.NO.
67320-93J20	508A-54-3
	508B-54-3
	508C-54-3
	508D-54-3
	508E-54-3
	508F-54-3
	508G-54-3
	508H-54-3
	515A-1-3
	515B-1-3
	515C-1-3
	515D-1-3
	515E-1-3
	515F-1-3
	515G-1-3
	515H-1-3
	515J-1-3
	515K-1-3
67320-93J30	508A-54-4
	508B-54-4
	508C-54-4
	508D-54-4
	508E-54-4
	508F-54-4
	508G-54-4
	508H-54-4
	515A-1-4
	515B-1-4
	515C-1-4
	515D-1-4
	515E-1-4
	515F-1-4
	515G-1-4
	515H-1-4
	515J-1-4
	515K-1-4
67320-93J40	508A-54-5
	508B-54-5
	508C-54-5
	508D-54-5
	508E-54-5
	508F-54-5
	508G-54-5
	508H-54-5
	515A-1-5
	515B-1-5
	515C-1-5
	515D-1-5
	515E-1-5
	515F-1-5

PART NO.	FIG.NO.-REF.NO.
	515G-1-5
	515H-1-5
	515J-1-5
	515K-1-5
67320-93J50	508A-54-6
	508B-54-6
	508C-54-6
	508D-54-6
	508E-54-6
	508F-54-6
	508G-54-6
	508H-54-6
	515A-1-6
	515B-1-6
	515C-1-6
	515D-1-6
	515E-1-6
	515F-1-6
	515G-1-6
	515H-1-6
	515J-1-6
	515K-1-6
67320-93J60	508A-54-7
	508B-54-7
	508C-54-7
	508D-54-7
	508E-54-7
	508F-54-7
	508G-54-7
	508H-54-7
	515A-1-7
	515B-1-7
	515C-1-7
	515D-1-7
	515E-1-7
	515F-1-7
	515G-1-7
	515H-1-7
	515J-1-7
	515K-1-7
67320-93J70	508A-54-8
	508B-54-8
	508C-54-8
	508D-54-8
	508E-54-8
	508F-54-8
	508G-54-8
	508H-54-8
	515A-1-8
	515B-1-8

PART NO.	FIG.NO.-REF.NO.
	515C-1-8
	515D-1-8
	515E-1-8
	515F-1-8
	515G-1-8
	515H-1-8
	515J-1-8
	515K-1-8
67320-93J80	508A-54-9
	508B-54-9
	508C-54-9
	508D-54-9
	508E-54-9
	508F-54-9
	508G-54-9
	508H-54-9
	515A-1-9
	515B-1-9
	515C-1-9
	515D-1-9
	515E-1-9
	515F-1-9
	515G-1-9
	515H-1-9
	515J-1-9
	515K-1-9
67341-88L01	204A-16
	204B-16
	204C-16
	204D-16
	204E-16
	204F-16
	204G-16
	204H-16
	204J-16
	204K-16
	204L-16
	204M-16
	204N-16
	204P-16
	204R-16
	204S-16
	204T-16
	204U-16
67343-88L01	204A-18
	204B-18
	204C-18
	204D-18
	204E-18
	204F-18

PART NO.	FIG.NO.-REF.NO.
	204G-18
	204H-18
	204J-18
	204K-18
	204L-18
	204M-18
	204N-18
	204P-18
	204R-18
	204S-18
	204T-18
	204U-18
67467-89J01	204A-21
	204B-21
	204C-21
	204D-21
	204E-21
	204F-21
	204G-21
	204H-21
	204J-21
	204K-21
	204L-21
	204M-21
	204N-21
	204P-21
	204R-21
	204S-21
	204T-21
	204U-21
67500-93J00	544A-29
67700-93J00	575A-1
	575B-1
	575C-1
	575D-1
	575E-1
	575F-1
	575G-1
	575H-1
	575J-1
	575K-1
67701-87J11	442A-2
	442B-2
	442C-2
	442D-2
	442E-2
	442F-2
	442G-2
	442H-2
	575A-3

PART NO.	FIG.NO.-REF.NO.
	575B-3
	575C-3
	575D-3
	575E-3
	575F-3
	575G-3
	575H-3
	575J-3
	575K-3
67721-87J00	442A-3
	442B-3
	442C-3
	442D-3
	442E-3
	442F-3
	442G-3
	442H-3
	575A-4
	575B-4
	575C-4
	575D-4
	575E-4
	575F-4
	575G-4
	575H-4
	575J-4
	575K-4
67725-99E00	442A-4
	442B-4
	442C-4
	442D-4
	442E-4
	442F-4
	442G-4
	442H-4
	575A-5
	575B-5
	575C-5
	575D-5
	575E-5
	575F-5
	575G-5
	575H-5
	575J-5
	575K-5
67726-99E00	442A-5
	442B-5
	442C-5
	442D-5
	442E-5

PART NO.	FIG.NO.-REF.NO.	PART NO.	FIG.NO.-REF.NO.	PART NO.	FIG.NO.-REF.NO.
	442F-5		420B-11		420P-19-1
	442G-5		420C-11		420R-19-1
	442H-5		420D-11		420T-19-1
	575A-6		420E-11	99011-88L50-059	420A-19-2
	575B-6		420F-11		420B-19-2
	575C-6		420G-11		420C-19-2
	575D-6		420H-11		420E-19-2
	575E-6		420J-11		420F-19-2
	575F-6		420K-11		420G-19-2
	575G-6		420L-11		420H-19
	575H-6		420M-11		420J-19-2
	575J-6		420N-11		420K-19
	575K-6		420P-11		420L-19-2
67728-99E00	442A-6		420R-11		420M-19
	442B-6		420S-11		420N-19-2
	442C-6		420T-11		420P-19-2
	442D-6		420U-11		420R-19-2
	442E-6	69711-93E10	136A-11		420S-19
	442F-6				420T-19-2
	442G-6				420U-19
	442H-6				
	575A-7				
	575B-7	70000		00000	
	575C-7				
	575D-7				
	575E-7	77811-54GB0-0PG	508A-46	01421-08607	124A-4
	575F-7		508B-46		124B-4
	575G-7		508C-46		124C-4
	575H-7		508D-46		124D-4
	575J-7		508E-46		124E-4
	575K-7		508F-46		124F-4
68110-88L00	420A-18		508G-46		124G-4
	420B-18		508H-46		124H-4
	420C-18				124J-4
	420D-18				124K-4
	420E-18				124L-4
	420F-18				124M-4
	420G-18	90000			124N-4
	420H-18				124P-4
	420J-18				124R-4
	420K-18	99011-88L50-054	420A-19-1		124S-4
	420L-18		420B-19-1		124T-4
	420M-18		420C-19-1		124U-4
	420N-18		420D-19	01547-06167	303A-9
	420P-18		420E-19-1	01547-06207	310A-8
	420R-18		420F-19-1	01547-06257	111A-18
	420S-18		420G-19-1		111B-18
	420T-18		420J-19-1		111C-18
	420U-18		420L-19-1		111D-18
68111-18G20	420A-11		420N-19-1		111E-18

PART NO.	FIG.NO.-REF.NO.	PART NO.	FIG.NO.-REF.NO.	PART NO.	FIG.NO.-REF.NO.
	111F-18		124A-12		204P-14
	111G-18		124B-12		204R-14
	111H-18		124C-12		204S-14
	111J-18		124D-12		204T-14
	111K-18		124E-12		204U-14
	111L-18		124F-12		303A-11
	111M-18		124G-12		322A-24
	111N-18		124H-12		322B-24
	111P-18		124J-12		322C-24
	111R-18		124K-12		322D-25
	111S-18		124L-12		322E-24
	111T-18		124M-12		322F-24
	111U-18		124N-12		322G-25
01547-0640A	175A-3		124P-12		322H-25
01547-06457	111A-19		124R-12		322J-24
	111B-19		124S-12		322K-24
	111C-19		124T-12		322L-25
	111D-19		124U-12		322M-25
	111E-19		146A-16		322N-25
	111F-19		180A-17		322P-25
	111G-19		180B-17		322R-25
	111H-19		180C-17		322S-25
	111J-19		180D-17		322T-25
	111K-19		180E-17		322U-25
	111L-19		180F-17		326A-8
	111M-19		180G-17		326C-8
	111N-19		180H-17		326D-8
	111P-19		180J-17		326E-8
	111R-19		180K-17		326F-8
	111S-19		180L-17		326G-8
	111T-19		180M-17		326H-8
	111U-19		180N-17		326L-8
01550-06127	111A-25		180P-17		326M-8
	111B-25		180R-17		326N-8
	111C-25		180S-17		326P-8
	111D-25		180T-17		326R-8
	111E-25		180U-17		326S-8
	111F-25		204A-14		326T-8
	111G-25		204B-14		326U-8
	111H-25		204C-14	01550-0612A	119A-12
	111J-25		204D-14	01550-06167	111A-27
	111K-25		204E-14		111B-27
	111L-25		204F-14		111C-27
	111M-25		204G-14		111D-27
	111N-25		204H-14		111E-27
	111P-25		204J-14		111F-27
	111R-25		204K-14		111G-27
	111S-25		204L-14		111H-27
	111T-25		204M-14		111J-27
	111U-25		204N-14		111K-27

PART NO.	FIG.NO.-REF.NO.	PART NO.	FIG.NO.-REF.NO.	PART NO.	FIG.NO.-REF.NO.
	111L-27		204M-17	01550-0620A	119A-10
	111M-27		204N-3	01550-06257	136A-8
	111N-27		204N-17		146A-2
	111P-27		204P-3		310A-2
	111R-27		204P-17	01550-06307	136A-2
	111S-27		204R-3		143A-25
	111T-27		204R-17		143B-25
	111U-27		204S-3		143C-25
	146A-9		204S-17		143D-25
	163A-4		204T-3		143E-25
	163B-4		204T-17		143F-25
	163C-4		204U-3		143G-25
	163D-4		204U-17		143H-25
	163E-4		301A-20		143J-25
	163F-4	01550-06207	124A-15		143K-25
	163G-4		124B-15		143L-25
	163H-4		124C-15		143M-25
	163J-4		124D-15		143N-25
	163K-4		124E-15		143P-25
	163L-4		124F-15		143R-25
	163M-4		124G-15		143S-25
	163N-4		124H-15		143T-25
	163P-4		124J-15		143U-25
	163R-4		124K-15		204A-4
	163S-4		124L-15		204B-4
	163T-4		124M-15		204C-4
	163U-4		124N-15		204D-4
	204A-3		124P-15		204E-4
	204A-17		124R-15		204F-4
	204B-3		124S-15		204G-4
	204B-17		124T-15		204H-4
	204C-3		124U-15		204J-4
	204C-17		162A-7		204K-4
	204D-3		162B-7		204L-4
	204D-17		162C-7		204M-4
	204E-3		162D-7		204N-4
	204E-17		162E-7		204P-4
	204F-3		162F-7		204R-4
	204F-17		162G-7		204S-4
	204G-3		162H-7		204T-4
	204G-17		162J-7		204U-4
	204H-3		162K-7		407N-31
	204H-17		162L-7		407P-31
	204J-3		162M-7		407R-31
	204J-17		162N-7		407S-31
	204K-3		162P-7		407T-31
	204K-17		162R-7		407U-31
	204L-3		162S-7	01550-06407	163A-11
	204L-17		162T-7		163B-11
	204M-3		162U-7		163C-11

PART NO.	FIG.NO.-REF.NO.	PART NO.	FIG.NO.-REF.NO.	PART NO.	FIG.NO.-REF.NO.
	163D-11		111U-9		124N-5
	163E-11		113A-2		124P-5
	163F-11		163A-5		124R-5
	163G-11		163B-5		124S-5
	163H-11		163C-5		124T-5
	163J-11		163D-5		124U-5
	163K-11		163E-5		301A-21
	163L-11		163F-5	01550-08407	113A-6
	163M-11		163G-5		124A-6
	163N-11		163H-5		124B-6
	163P-11		163J-5		124C-6
	163R-11		163K-5		124D-6
	163S-11		163L-5		124E-6
	163T-11		163M-5		124F-6
	163U-11		163N-5		124G-6
01550-06457	163A-3		163P-5		124H-6
	163B-3		163R-5		124J-6
	163C-3		163S-5		124K-6
	163D-3		163T-5		124L-6
	163E-3		163U-5		124M-6
	163F-3	01550-0825A	401A-10		124N-6
	163G-3		401B-10		124P-6
	163H-3		401C-10		124R-6
	163J-3		401D-10		124S-6
	163K-3		401E-10		124T-6
	163L-3		401F-10		124U-6
	163M-3		401G-10	01550-08457	111A-12
	163N-3		401H-10		111B-12
	163P-3		401J-10		111C-12
	163R-3		401K-10		111D-12
	163S-3		401L-10		111E-12
	163T-3		401M-10		111F-12
	163U-3		401N-10		111G-12
01550-08207	111A-9		401P-10		111H-12
	111B-9		401R-10		111J-12
	111C-9		401S-10		111K-12
	111D-9		401T-10		111L-12
	111E-9		401U-10		111M-12
	111F-9	01550-08307	124A-5		111N-12
	111G-9		124B-5		111P-12
	111H-9		124C-5		111R-12
	111J-9		124D-5		111S-12
	111K-9		124E-5		111T-12
	111L-9		124F-5		111U-12
	111M-9		124G-5	01550-0845A	401A-4
	111N-9		124H-5		401B-4
	111P-9		124J-5		401C-4
	111R-9		124K-5		401D-4
	111S-9		124L-5		401E-4
	111T-9		124M-5		401F-4

PART NO.	FIG.NO.-REF.NO.	PART NO.	FIG.NO.-REF.NO.	PART NO.	FIG.NO.-REF.NO.
	401G-4		143B-15		111G-21
	401H-4		143C-15		111H-21
	401J-4		143D-15		111J-21
	401K-4		143E-15		111K-21
	401L-4		143F-15		111L-21
	401M-4		143G-15		111M-21
	401N-4		143J-15		111N-21
	401P-4		143L-15		111P-21
	401R-4		143N-15		111R-21
	401S-4		143P-15		111S-21
	401T-4		143R-15		111T-21
	401U-4		143T-15		111U-21
01550-0885A	401A-5	02112-06307	303A-12	03112-0630B	502A-25
	401B-5	02112-34167	124A-9		502B-23
	401C-5		124B-9		502C-23
	401D-5		124C-9		502D-25
	401E-5		124D-9		502E-25
	401F-5		124E-9		502F-23
	401G-5		124F-9		502G-25
	401H-5		124G-9		502H-25
	401J-5		124H-9		502J-23
	401K-5		124J-9		502K-23
	401L-5		124K-9		502L-23
	401M-5		124L-9		502M-23
	401N-5		124M-9		502N-25
	401P-5		124N-9		502P-23
	401R-5		124P-9		502R-25
	401S-5		124R-9		502S-25
	401T-5		124S-9		502T-23
	401U-5		124T-9		502U-23
01570-06167	204A-20		124U-9	03121-0516A	530A-28
	204B-20	02142-0408B	143A-16		530B-28
	204C-20		143B-16		530C-28
	204D-20		143C-16		530D-28
	204E-20		143D-16		530E-28
	204F-20		143E-16		530F-28
	204G-20		143F-16		530G-28
	204H-20		143G-16		530H-28
	204J-20		143J-16	03122-05165	530A-14
	204K-20		143L-16		530B-14
	204L-20		143N-16		530C-14
	204M-20		143P-16		530D-14
	204N-20		143R-16		530E-14
	204P-20		143T-16		530F-14
	204R-20	02142-0612A	111A-21		530G-14
	204S-20		111B-21		530H-14
	204T-20		111C-21	03142-04309	160A-17
	204U-20		111D-21		160B-17
01570-0616A	175A-7		111E-21		160C-17
02112-0408A	143A-15		111F-21		160D-17

PART NO.	FIG.NO.-REF.NO.	PART NO.	FIG.NO.-REF.NO.	PART NO.	FIG.NO.-REF.NO.
	160E-17		420G-5		144S-5
	160F-17		420H-5		144T-5
	160G-17		420J-5		144U-5
	160H-17		420K-5	08113-62090	220N-24
	160J-17		420L-5		220P-24
	160K-17		420M-5		220R-24
	160L-17		420N-5		220S-24
	160M-17		420P-5		220T-24
03522-05169	444A-61		420R-5		220U-24
	444B-62		420S-5	08211-20263	220A-12
	444C-62		420T-5		220B-12
	444D-61		420U-5		220C-12
	444E-61	03542-06209	136A-4		220D-12
	444F-62	04211-09109	175A-4		220E-12
	444G-62	04211-13189	111A-13		220F-12
	444H-62		111B-13		220G-12
	444J-62		111C-13		220H-12
	444K-62		111D-13		220J-12
	570A-75		111E-13		220K-12
	570B-76		111F-13		220L-12
	570C-75		111G-13		220M-12
	570D-76		111H-13	08211-35451	220A-10-6
	570E-76		111J-13		220B-10-6
	570F-76		111K-13		220C-10-6
	570G-76		111L-13		220D-10-6
	570H-76		111M-13		220E-10-6
03542-05169	410A-12		111N-13		220F-10-6
	410B-12		111P-13		220G-10-6
	410C-12		111R-13		220H-10-6
	410D-12		111S-13		220J-10-6
	410E-12		111T-13		220K-10-6
	410F-12		111U-13		220L-10-6
	410G-12	04221-04089	116A-7		220M-10-6
	410H-12		136A-9	08221-35455	220A-10-1
	410J-12	04221-05109	121A-6		220B-10-1
	410K-12	07120-06357	144A-5		220C-10-1
	410L-12		144B-5		220D-10-1
	410M-12		144C-5		220E-10-1
	410N-12		144D-5		220F-10-1
	410P-12		144E-5		220G-10-1
	410R-12		144F-5		220H-10-1
	410S-12		144G-5		220J-10-1
	410T-12		144H-5		220K-10-1
	410U-12		144J-5		220L-10-1
03542-06169	420A-5		144K-5		220M-10-1
	420B-5		144L-5	08221-35456	220A-10-4
	420C-5		144M-5		220B-10-4
	420D-5		144N-5		220C-10-4
	420E-5		144P-5		220D-10-4
	420F-5		144R-5		220E-10-4

PART NO.	FIG.NO.-REF.NO.	PART NO.	FIG.NO.-REF.NO.	PART NO.	FIG.NO.-REF.NO.
	220F-10-4		322H-2		220D-28
	220G-10-4		322J-2		220E-28
	220H-10-4		322K-2		220F-28
	220J-10-4		322L-2		220G-28
	220K-10-4		322M-2		220H-28
	220L-10-4		322N-2		220J-28
	220M-10-4		322P-2		220K-28
08310-00067	322A-17		322R-2		220L-28
	322B-17		322S-2		220M-28
	322C-17		322T-2	09100-06113	339A-10
	322D-18		322U-2		339B-10
	322E-17	08321-01067	322A-18		339C-10
	322F-17		322B-18	09100-06131	407N-8
	322G-18		322C-18		407P-8
	322H-18		322D-19		407R-8
	322J-17		322E-18		407S-8
	322K-17		322F-18		407T-8
	322L-18		322G-19		407U-8
	322M-18		322H-19	09100-08232	508A-47
	322N-18		322J-18		508B-47
	322P-18		322K-18		508C-47
	322R-18		322L-19		508D-47
	322S-18		322M-19		508E-47
	322T-18		322N-19		508F-47
	322U-18		322P-19		508G-47
08316-10087	124A-7		322R-19		508H-47
	124B-7		322S-19	09100-08260	119A-5
	124C-7		322T-19	09100-12091	335A-8-2
	124D-7		322U-19		335B-8-2
	124E-7	08331-3115A	206A-12		335C-8-2
	124F-7		206B-12		335D-7-2
	124G-7		206C-12		335E-8-2
	124H-7		206D-12		335F-8-2
	124J-7		206E-12		335G-7-2
	124K-7		206F-12		335H-7-2
	124L-7		206G-12		335J-8-2
	124M-7		206H-12		335K-8-2
	124N-7		206J-12		335L-7-2
	124P-7		206K-12		335M-7-2
	124R-7		206L-12		335N-7-2
	124S-7		206M-12		335P-7-2
	124T-7	08331-41309	210A-20		335R-7-2
	124U-7		210B-20		335S-7-2
	322A-2		210C-20		335T-7-2
	322B-2		210D-20		335U-7-2
	322C-2		210E-20	09100-12093	335A-8-1
	322D-2		210F-20		335B-8-1
	322E-2	08331-41329	220A-28		335C-8-1
	322F-2		220B-28		335D-7-1
	322G-2		220C-28		335E-8-1

PART NO.	FIG.NO.-REF.NO.	PART NO.	FIG.NO.-REF.NO.	PART NO.	FIG.NO.-REF.NO.
	335F-8-1		111E-8		405T-13
	335G-7-1		111F-8		405U-13
	335H-7-1		111G-8	09103-10189	121A-4
	335J-8-1		111H-8	09103-14024	303A-2
	335K-8-1		111J-8	09106-05030	303A-7
	335L-7-1		111K-8	09106-10065	335D-13
	335M-7-1		111L-8		335G-13
	335N-7-1		111M-8		335H-13
	335P-7-1		111N-8		335L-13
	335R-7-1		111P-8		335M-13
	335S-7-1		111R-8		335N-13
	335T-7-1		111S-8		335P-13
	335U-7-1		111T-8		335R-13
09103-06093	315A-5		111U-8		335S-13
	315C-5		113A-9		335T-13
	315D-9		335A-7		335U-13
	315E-5		335B-7	09108-06143	160A-7
	315F-5		335C-7		160B-7
	315G-9		335E-7		160C-7
	315H-9		335F-7		160D-7
	315L-9		335J-7		160E-7
	315M-9		335K-7		160F-7
	315N-9		335N-12		160G-7
	315P-9		335P-12		160H-7
	315R-9		335R-12		160J-7
	315S-9		335S-12		160K-7
	315T-9		335T-12		160L-7
	315U-9		335U-12		160M-7
09103-06266	111A-3		337A-27	09108-06144	160A-8
	111B-3		337B-27		160B-8
	111C-3		337C-27		160C-8
	111D-3		337D-27		160D-8
	111E-3		337E-27		160E-8
	111F-3		337F-27		160F-8
	111G-3		337G-27		160G-8
	111H-3		337H-27		160H-8
	111J-3		337J-27		160J-8
	111K-3		337K-25		160K-8
	111L-3		337L-25		160L-8
	111M-3		337M-25		160M-8
	111N-3		337N-25	09108-08254	405G-8
	111P-3		337P-25		405H-8
	111R-3		337R-25		405J-8
	111S-3		339A-12		405K-8
	111T-3		339B-12		405L-8
	111U-3		339C-12		405M-8
09103-06281	111A-8		405N-12	09108-10161	336A-12
	111B-8		405P-12		336D-20
	111C-8		405R-13		336E-12
	111D-8		405S-13		336G-20

PART NO.	FIG.NO.-REF.NO.	PART NO.	FIG.NO.-REF.NO.	PART NO.	FIG.NO.-REF.NO.
	336H-20		180L-8		336C-19
	336N-20		180M-8		336E-23
	336R-20		180N-8		336F-19
	336S-20		180P-8		336J-19
09116-05010	410A-23		180R-8		336K-19
	410B-23		180S-8	09116-06237	336B-30
	410C-23		180T-8		336C-30
	410D-23		180U-8		336F-30
	410E-23		335D-12		336J-30
	410F-23		335G-12		336K-30
	410G-23		335H-12		444F-80
	410H-23		335L-12		444G-80
	410J-23		335M-12		444H-80
	410K-23	09116-06127	410A-15		444J-80
	410L-23		410B-15		444K-80
	410M-23		410C-15		570A-80
	410N-23		410D-15		570B-81
	410P-23		410E-15		570C-80
	410R-23		410F-15		570D-81
	410S-23		410G-15		570E-81
	410T-23		410H-15		570F-81
	410U-23		410J-15		570G-81
09116-06121	162A-3		410K-15		570H-81
	162B-3		410L-15	09116-08122	220A-25
	162C-3		410M-15		220B-25
	162D-3		410N-15		220C-25
	162E-3		410P-15		220D-25
	162F-3		410R-15		220E-25
	162G-3		410S-15		220F-25
	162H-3		410T-15		220G-25
	162J-3		410U-15		220H-25
	162K-3	09116-06202	310A-4		220J-25
	162L-3	09116-06236	160A-15		220K-25
	162M-3		160B-15		220L-25
	162N-3		160C-15		220M-25
	162P-3		160D-15		220N-26
	162R-3		160E-15		220P-26
	162S-3		160F-15		220R-26
	162T-3		160G-15		220S-26
	162U-3		160H-15		220T-26
	180A-8		160J-15		220U-26
	180B-8		160K-15	09116-08128	180A-3
	180C-8		160L-15		180B-3
	180D-8		160M-15		180C-3
	180E-8		160N-14		180D-3
	180F-8		160P-14		180E-3
	180G-8		160R-14		180F-3
	180H-8		160T-14		180G-3
	180J-8		336A-23		180H-3
	180K-8		336B-19		180J-3

PART NO.	FIG.NO.-REF.NO.	PART NO.	FIG.NO.-REF.NO.	PART NO.	FIG.NO.-REF.NO.
	180K-3		444G-65		180C-13
	180L-3		444H-65		180D-13
	180M-3		444J-65		180E-13
	180N-3		444K-65		180F-13
	180P-3		570A-61		180G-13
	180R-3		570B-61		180H-13
	180S-3		570C-61		180J-13
	180T-3		570D-61		180K-13
	180U-3		570E-61		180L-13
09116-08131	405N-8		570F-61		180M-13
	405P-8		570G-61		180N-13
	405R-8		570H-61		180P-13
	405S-8	09116-08159	401A-3		180R-13
	405T-8		401B-3		180S-13
	405U-8		401C-3		180T-13
	407A-8		401D-3		180U-13
	407B-8		401E-3	09116-10150	405N-9
	407C-8		401F-3		405P-9
	407D-8		401G-3		405R-9
	407E-8		401H-3		405S-9
	407F-8		401J-3		405T-9
	407G-8		401K-3		405U-9
	407H-8		401L-3		407N-10
	407J-8		401M-3		407P-10
	407K-8		401N-3		407R-10
	407L-8		401P-3		407S-10
	407M-8		401R-3		407T-10
09116-08137	335D-5		401S-3		407U-10
	335G-5		401T-3		444A-72
	335H-5		401U-3		444B-73
	335L-5	09116-08163	410A-8		444C-73
	335M-5		410B-8		444D-72
	335N-5		410C-8		444E-72
	335P-5		410D-8		444F-73
	335R-5		410E-8		444G-73
	335S-5		410F-8		444H-73
	335T-5		410G-8		444J-73
	335U-5		410H-8		444K-73
	407N-9		410J-8		570A-68
	407P-9		410K-8		570B-68
	407R-9		410L-8		570C-68
	407S-9		410M-8		570D-68
	407T-9		410N-8		570E-68
	407U-9		410P-8		570F-68
	444A-64		410R-8		570G-68
	444B-65		410S-8		570H-68
	444C-65		410T-8	09116-10176	401A-13
	444D-64		410U-8		401B-13
	444E-64	09116-10124	180A-13		401C-13
	444F-65		180B-13		401D-13

PART NO.	FIG.NO.-REF.NO.	PART NO.	FIG.NO.-REF.NO.	PART NO.	FIG.NO.-REF.NO.
	401E-13	09116-10179	337A-25		160B-19
	401F-13		337B-25		160C-19
	401G-13		337C-25		160D-19
	401H-13		337D-25		160E-19
	401J-13		337E-25		160F-19
	401K-13		337F-25		160G-19
	401L-13		337G-25		160H-19
	401M-13		337H-25		160J-19
	401N-13		337J-25		160K-19
	401P-13		337K-23		160L-19
	401R-13		337L-23		160M-19
	401S-13		337M-23		160N-13
	401T-13		337N-23		160P-13
	401U-13		337P-23		160R-13
	405A-2		337R-23		160S-13
	405A-6		339A-11		160T-13
	405B-2		339B-11		160U-13
	405B-6		339C-11		315D-3
	405C-2	09117-06031	210A-8		315G-3
	405C-6		210B-8		315H-3
	405D-2		210C-8		315L-3
	405D-6		210D-8		315M-3
	405E-2		210E-8		315N-3
	405E-6		210F-8		315P-3
	405F-2	09117-08109	407A-5		315R-3
	405F-6		407B-5		315S-3
	405G-2		407C-5		315T-3
	405G-6		407D-5		315U-3
	405H-2		407E-5	09125-05047	444A-42
	405H-6		407F-5		444B-42
	405J-2		407G-5		444C-42
	405J-6		407H-5		444D-42
	405K-2		407J-5		444E-42
	405K-6		407K-5		444F-42
	405L-2		407L-5		444G-42
	405L-6		407M-5		444H-42
	405M-2	09117-08110	220N-30		444J-42
	405M-6		220P-30		444K-42
	405N-2		220R-30		570A-41
	405N-6		220S-30		570B-41
	405P-2		220T-30		570C-41
	405P-6		220U-30		570D-41
	405R-2	09117-10039	407N-11		570E-41
	405R-6		407P-11		570F-41
	405S-2		407R-11		570G-41
	405S-6		407S-11		570H-41
	405T-2		407T-11	09125-05048	315A-3
	405T-6		407U-11		315C-3
	405U-2	09125-05042	545A-21		315E-3
	405U-6	09125-05046	160A-19		315F-3

PART NO.	FIG.NO.-REF.NO.	PART NO.	FIG.NO.-REF.NO.	PART NO.	FIG.NO.-REF.NO.
09125-05050	336A-10		336H-13	09136-06148	410A-5-1
	336B-10		336L-13		410A-5-2
	336C-10		336M-13		410B-5
	336D-10		336N-13		410C-5
	336E-10		336P-13		410D-5-1
	336F-10		336R-13		410D-5-2
	336G-10		336S-13		410E-5-1
	336H-10		336T-13		410E-5-2
	336J-10		336U-13		410F-5
	336K-10	09126-05003	508A-48		410G-5-1
	336L-10		508B-48		410G-5-2
	336M-10		508C-48		410H-5
	336N-10		508D-48		410J-5
	336P-10		508E-48		410K-5
	336R-10		508F-48		410L-5
	336S-10		508G-48		410M-5
	336T-10		508H-48		410N-5
	336U-10	09126-06006	545A-25		410P-5
09125-05135	544A-30	09126-06015	444A-38		410R-5-1
09125-06063	336A-9		444B-38		410R-5-2
	336B-9		444C-38		410S-5-1
	336C-9		444D-38		410S-5-2
	336D-9		444E-38		410T-5-1
	336D-30		444F-38		410T-5-2
	336E-9		444G-38		410U-5-1
	336F-9		444H-38		410U-5-2
	336G-9		444J-38	09137-04004	326A-2
	336G-30		444K-38		326B-2
	336H-9		570A-37		326C-2
	336H-30		570B-37		326D-2
	336J-9		570C-37		326E-2
	336K-9		570D-37		326F-2
	336L-9		570E-37		326G-2
	336L-26		570F-37		326H-2
	336M-9		570G-37		326J-2
	336M-26		570H-37		326K-2
	336N-9	09131-05004	530A-33		326L-2
	336N-30		530B-33		326M-2
	336P-9		530C-33		326N-2
	336P-26		530D-33		326P-2
	336R-9		530E-33		326R-2
	336R-30		530F-33		326S-2
	336S-9		530G-33		326T-2
	336S-30		530H-33		326U-2
	336T-9	09132-04034	160N-17	09140-05005	163A-9
	336T-26		160P-17		163B-9
	336U-9		160R-17		163C-9
	336U-26		160S-16		163D-9
09125-06067	336D-13		160T-17		163E-9
	336G-13		160U-16		163F-9

PART NO.	FIG.NO.-REF.NO.
	163G-9
	163H-9
	163J-9
	163K-9
	163L-9
	163M-9
	163N-9
	163P-9
	163R-9
	163S-9
	163T-9
	163U-9
	544A-32
09140-06020	339A-13
	339B-13
	339C-13
	508A-49
	508B-49
	508C-49
	508D-49
	508E-49
	508F-49
	508G-49
	508H-49
	545A-31
09140-08023-XC0	407G-9
	407H-9
	407J-9
	407K-9
	407L-9
	407M-9
09140-12034	220A-7
	220B-7
	220C-7
	220D-7
	220E-7
	220F-7
	220G-7
	220H-7
	220J-7
	220K-7
	220L-7
	220M-7
09140-14024	220N-5
	220P-5
	220R-5
	220S-5
	220T-5
	220U-5
09141-18005	407A-13

PART NO.	FIG.NO.-REF.NO.
	407B-13
	407C-13
	407D-13
	407E-13
	407F-13
	407G-15
	407H-15
	407J-15
	407K-15
	407L-15
	407M-15
	407N-23
	407P-23
	407R-23
	407S-23
	407T-23
	407U-23
09159-06084	420A-8
	420B-8
	420C-8
	420D-8
	420E-8
	420F-8
	420G-8
	420H-8
	420J-8
	420K-8
	420L-8
	420M-8
	420N-8
	420P-8
	420R-8
	420S-8
	420T-8
	420U-8
09159-08059	336B-31
	336C-31
	336F-31
	336J-31
	336K-31
	570A-90
	570C-90
09159-10050	335A-13
	335B-13
	335C-13
	335E-13
	335F-13
	335J-13
	335K-13
	336A-13

PART NO.	FIG.NO.-REF.NO.
	336D-21
	336E-13
	336G-21
	336H-21
	336N-21
	336R-21
	336S-21
09159-12014	335A-9
	335B-9
	335C-9
	335D-8
	335E-9
	335F-9
	335G-8
	335H-8
	335J-9
	335K-9
	335L-8
	335M-8
	335N-8
	335P-8
	335R-8
	335S-8
	335T-8
	335U-8
	401A-21
	401B-21
	401C-21
	401D-21
	401E-21
	401F-21
	401G-21
	401H-21
	401J-21
	401K-21
	401L-21
	401M-21
	401N-21
	401P-21
	401R-21
	401S-21
	401T-21
	401U-21
	405A-13
	405B-13
	405C-13
	405D-13
	405E-13
	405F-13
	405G-17

PART NO.	FIG.NO.-REF.NO.
	405H-17
	405J-17
	405K-17
	405L-17
	405M-17
	405N-19
	405P-19
	405R-20
	405S-20
	405T-20
	405U-20
	444A-65
	444B-66
	444C-66
	444D-65
	444E-65
	444F-66
	444G-66
	444H-66
	444J-66
	444K-66
	570A-62
	570B-62
	570C-62
	570D-62
	570E-62
	570F-62
	570G-62
	570H-62
09159-22006	335A-10
	335B-10
	335C-10
	335D-6
	335E-10
	335F-10
	335G-6
	335H-6
	335J-10
	335K-10
	335L-6
	335M-6
	335N-6
	335P-6
	335R-6
	335S-6
	335T-6
	335U-6
09160-05024	544A-19
09160-05029	315A-4
	315C-4

PART NO.	FIG.NO.-REF.NO.
	315E-4
	315F-4
	544A-31
09160-06047	163A-10
	163B-10
	163C-10
	163D-10
	163E-10
	163F-10
	163G-10
	163H-10
	163J-10
	163K-10
	163L-10
	163M-10
	163N-10
	163P-10
	163R-10
	163S-10
	163T-10
	163U-10
09160-06055	204A-10
	204A-22
	204B-10
	204B-22
	204C-10
	204C-22
	204D-10
	204D-22
	204E-10
	204E-22
	204F-10
	204F-22
	204G-10
	204G-22
	204H-10
	204H-22
	204J-10
	204J-22
	204K-10
	204K-22
	204L-10
	204L-22
	204M-10
	204M-22
	204N-10
	204N-22
	204P-10
	204P-22
	204R-10

PART NO.	FIG.NO.-REF.NO.
	204R-22
	204S-10
	204S-22
	204T-10
	204T-22
	204U-10
	204U-22
09160-06084	143A-27
	143B-27
	143C-27
	143D-27
	143E-27
	143F-27
	143G-27
	143H-27
	143J-27
	143K-27
	143L-27
	143M-27
	143N-27
	143P-27
	143R-27
	143S-27
	143T-27
	143U-27
09160-06085	407N-12
	407P-12
	407R-12
	407S-12
	407T-12
	407U-12
09160-06104	508A-50
	508B-50
	508C-50
	508D-50
	508E-50
	508F-50
	508G-50
	508H-50
09160-08082	407G-10
	407H-10
	407J-10
	407K-10
	407L-10
	407M-10
09160-08122	210A-11
	210B-11
	210C-11
	210D-11
	210E-11

PART NO.	FIG.NO.-REF.NO.
	210F-11
09160-08123	119A-6
09160-09010	210A-10
	210B-10
	210C-10
	210D-10
	210E-10
	210F-10
09160-09015	210A-9
	210B-9
	210C-9
	210D-9
	210E-9
	210F-9
09160-10082	335A-14
	335B-14
	335C-14
	335D-14
	335E-14
	335F-14
	335G-14
	335H-14
	335J-14
	335K-14
	335L-14
	335M-14
	335N-14
	335P-14
	335R-14
	335S-14
	335T-14
	335U-14
09160-10093	121A-5
09160-10139	337A-28
	337B-28
	337D-28
	337E-28
09160-10141	336A-14
	336D-22
	336E-14
	336G-22
	336H-22
	336N-22
	336R-22
	336S-22
09160-12044	335A-11
	335B-11
	335C-11
	335D-10
	335E-11

PART NO.	FIG.NO.-REF.NO.
	335F-11
	335G-10
	335H-10
	335J-11
	335K-11
	335L-10
	335M-10
	335N-10
	335P-10
	335R-10
	335S-10
	335T-10
	335U-10
09160-12066	335A-5
	335B-5
	335C-5
	335E-5
	335F-5
	335J-5
	335K-5
	444A-66
	444B-67
	444C-67
	444D-66
	444E-66
	444F-67
	444G-67
	444H-67
	444J-67
	444K-67
	570A-63
	570B-63
	570C-63
	570D-63
	570E-63
	570F-63
	570G-63
	570H-63
09160-12124	444A-67
	444B-68
	444C-68
	444D-67
	444E-67
	444F-68
	444G-68
	444H-68
	444J-68
	444K-68
	570A-64
	570B-64

PART NO.	FIG.NO.-REF.NO.
	570C-64
	570D-64
	570E-64
	570F-64
	570G-64
	570H-64
09160-12126	335A-12
	335B-12
	335C-12
	335D-9
	335E-12
	335F-12
	335G-9
	335H-9
	335J-12
	335K-12
	335L-9
	335M-9
	335N-9
	335P-9
	335R-9
	335S-9
	335T-9
	335U-9
09160-13014	410A-17
	410B-17
	410C-17
	410D-17
	410E-17
	410F-17
	410G-17
	410H-17
	410J-17
	410K-17
	410L-17
	410M-17
	410N-17
	410P-17
	410R-17
	410S-17
	410T-17
	410U-17
09160-14065	303A-3
09160-18028	407A-15
	407B-15
	407C-15
	407D-15
	407E-15
	407F-15
	407G-17

PART NO.	FIG.NO.-REF.NO.
	407H-17
	407J-17
	407K-17
	407L-17
	407M-17
	407N-24
	407P-24
	407R-24
	407S-24
	407T-24
	407U-24
09160-22018	220A-11-1
	220B-11-1
	220C-11-1
	220D-11-1
	220E-11-1
	220F-11-1
	220G-11-1
	220H-11-1
	220J-11-1
	220K-11-1
	220L-11-1
	220M-11-1
09160-22019	220A-11-2
	220B-11-2
	220C-11-2
	220D-11-2
	220E-11-2
	220F-11-2
	220G-11-2
	220H-11-2
	220J-11-2
	220K-11-2
	220L-11-2
	220M-11-2
09160-22020	220A-11-3
	220B-11-3
	220C-11-3
	220D-11-3
	220E-11-3
	220F-11-3
	220G-11-3
	220H-11-3
	220J-11-3
	220K-11-3
	220L-11-3
	220M-11-3
09160-22021	220A-11-4
	220B-11-4
	220C-11-4

PART NO.	FIG.NO.-REF.NO.
	220D-11-4
	220E-11-4
	220F-11-4
	220G-11-4
	220H-11-4
	220J-11-4
	220K-11-4
	220L-11-4
	220M-11-4
09160-22022	220A-11-5
	220B-11-5
	220C-11-5
	220D-11-5
	220E-11-5
	220F-11-5
	220G-11-5
	220H-11-5
	220J-11-5
	220K-11-5
	220L-11-5
	220M-11-5
09160-22023	220A-11-6
	220B-11-6
	220C-11-6
	220D-11-6
	220E-11-6
	220F-11-6
	220G-11-6
	220H-11-6
	220J-11-6
	220K-11-6
	220L-11-6
	220M-11-6
09160-39002	336A-17
	336B-13
	336C-13
	336D-17
	336E-17
	336F-13
	336G-17
	336H-17
	336J-13
	336K-13
	336L-17
	336M-17
	336N-17
	336P-17
	336R-17
	336S-17
	336T-17

PART NO.	FIG.NO.-REF.NO.
	336U-17
09160-39003	336A-15
	336B-11
	336C-11
	336D-15
	336E-15
	336F-11
	336G-15
	336H-15
	336J-11
	336K-11
	336L-15
	336M-15
	336N-15
	336P-15
	336R-15
	336S-15
	336T-15
	336U-15
09161-08011	336B-32
	336C-32
	336F-32
	336J-32
	336K-32
	570A-91
	570C-91
09163-06001	444A-39
	444B-39
	444C-39
	444D-39
	444E-39
	444F-39
	444G-39
	444H-39
	444J-39
	444K-39
	570A-38
	570B-38
	570C-38
	570D-38
	570E-38
	570F-38
	570G-38
	570H-38
09164-13010	444A-69
	444B-70
	444C-70
	444D-69
	444E-69
	444F-70

PART NO.	FIG.NO.-REF.NO.	PART NO.	FIG.NO.-REF.NO.	PART NO.	FIG.NO.-REF.NO.
	444G-70		407R-13		410K-9
	444H-70		407S-13		410L-9
	444J-70		407T-13		410M-9
	444K-70		407U-13		410N-9
	570A-66	09168-12012	180A-4		410P-9
	570B-66		180B-4		410R-9
	570C-66		180C-4		410S-9
	570D-66		180D-4		410T-9
	570E-66		180E-4		410U-9
	570F-66		180F-4	09169-31001	220N-32
	570G-66		180G-4		220P-32
	570H-66		180H-4		220R-32
09164-14008	410A-18		180J-4		220S-32
	410B-18		180K-4		220T-32
	410C-18		180L-4		220U-32
	410D-18		180M-4	09180-06198	144A-6
	410E-18		180N-4		144B-6
	410F-18		180P-4		144C-6
	410G-18		180R-4		144D-6
	410H-18		180S-4		144E-6
	410J-18		180T-4		144F-6
	410K-18		180U-4		144G-6
	410L-18	09169-06062	310A-5		144H-6
	410M-18	09169-06075	143A-26		144J-6
	410N-18		143B-26		144K-6
	410P-18		143C-26		144L-6
	410R-18		143D-26		144M-6
	410S-18		143E-26		144N-6
	410T-18		143F-26		144P-6
	410U-18		143G-26		144R-6
09164-31001	220N-33		143H-26		144S-6
	220P-33		143J-26		144T-6
	220R-33		143K-26		144U-6
	220S-33		143L-26	09181-25030	220N-17
	220T-33		143M-26		220P-17
	220U-33		143N-26		220R-17
09168-10022	407A-7		143P-26		220S-17
	407B-7		143R-26		220T-17
	407C-7		143S-26		220U-17
	407D-7		143T-26	09181-28015	220N-10-1
	407E-7		143U-26		220P-10-1
	407F-7	09169-08039	410A-9		220R-10-1
	407G-7		410B-9		220S-10-1
	407H-7		410C-9		220T-10-1
	407J-7		410D-9		220U-10-1
	407K-7		410E-9	09181-28016	220N-10-2
	407L-7		410F-9		220P-10-2
	407M-7		410G-9		220R-10-2
	407N-13		410H-9		220S-10-2
	407P-13		410J-9		220T-10-2

PART NO.	FIG.NO.-REF.NO.	PART NO.	FIG.NO.-REF.NO.	PART NO.	FIG.NO.-REF.NO.
	220U-10-2		220B-9-3		220K-8-2
09181-28017	220N-10-3		220C-9-3		220L-8-2
	220P-10-3		220D-9-3		220M-8-2
	220R-10-3		220E-9-3	09181-33002	220A-8-3
	220S-10-3		220F-9-3		220B-8-3
	220T-10-3		220G-9-3		220C-8-3
	220U-10-3		220H-9-3		220D-8-3
09181-28018	220N-10-4		220J-9-3		220E-8-3
	220P-10-4		220K-9-3		220F-8-3
	220R-10-4		220L-9-3		220G-8-3
	220S-10-4		220M-9-3		220H-8-3
	220T-10-4	09181-30190	220A-9-4		220J-8-3
	220U-10-4		220B-9-4		220K-8-3
09181-28019	220N-10-5		220C-9-4		220L-8-3
	220P-10-5		220D-9-4		220M-8-3
	220R-10-5		220E-9-4	09181-33003	220A-8-4
	220S-10-5		220F-9-4		220B-8-4
	220T-10-5		220G-9-4		220C-8-4
	220U-10-5		220H-9-4		220D-8-4
09181-28020	220N-10-6		220J-9-4		220E-8-4
	220P-10-6		220K-9-4		220F-8-4
	220R-10-6		220L-9-4		220G-8-4
	220S-10-6		220M-9-4		220H-8-4
	220T-10-6	09181-30192	220A-9-5		220J-8-4
	220U-10-6		220B-9-5		220K-8-4
09181-30186	220A-9-1		220C-9-5		220L-8-4
	220B-9-1		220D-9-5		220M-8-4
	220C-9-1		220E-9-5	09181-33004	220A-8-5
	220D-9-1		220F-9-5		220B-8-5
	220E-9-1		220G-9-5		220C-8-5
	220F-9-1		220H-9-5		220D-8-5
	220G-9-1		220J-9-5		220E-8-5
	220H-9-1		220K-9-5		220F-8-5
	220J-9-1		220L-9-5		220G-8-5
	220K-9-1		220M-9-5		220H-8-5
	220L-9-1	09181-31001	220N-31		220J-8-5
	220M-9-1		220P-31		220K-8-5
09181-30187	220A-9-2		220R-31		220L-8-5
	220B-9-2		220S-31		220M-8-5
	220C-9-2		220T-31	09181-33005	220A-8-6
	220D-9-2		220U-31		220B-8-6
	220E-9-2	09181-33001	220A-8-2		220C-8-6
	220F-9-2		220B-8-2		220D-8-6
	220G-9-2		220C-8-2		220E-8-6
	220H-9-2		220D-8-2		220F-8-6
	220J-9-2		220E-8-2		220G-8-6
	220K-9-2		220F-8-2		220H-8-6
	220L-9-2		220G-8-2		220J-8-6
	220M-9-2		220H-8-2		220K-8-6
09181-30188	220A-9-3		220J-8-2		220L-8-6

PART NO.	FIG.NO.-REF.NO.
	220M-8-6
09181-33006	220A-8-7
	220B-8-7
	220C-8-7
	220D-8-7
	220E-8-7
	220F-8-7
	220G-8-7
	220H-8-7
	220J-8-7
	220K-8-7
	220L-8-7
	220M-8-7
09181-33007	220A-8-8
	220B-8-8
	220C-8-8
	220D-8-8
	220E-8-8
	220F-8-8
	220G-8-8
	220H-8-8
	220J-8-8
	220K-8-8
	220L-8-8
	220M-8-8
09181-33008	220A-8-9
	220B-8-9
	220C-8-9
	220D-8-9
	220E-8-9
	220F-8-9
	220G-8-9
	220H-8-9
	220J-8-9
	220K-8-9
	220L-8-9
	220M-8-9
09181-33009	220A-8-10
	220B-8-10
	220C-8-10
	220D-8-10
	220E-8-10
	220F-8-10
	220G-8-10
	220H-8-10
	220J-8-10
	220K-8-10
	220L-8-10
	220M-8-10
09181-35101	220A-8-1

PART NO.	FIG.NO.-REF.NO.
	220B-8-1
	220C-8-1
	220D-8-1
	220E-8-1
	220F-8-1
	220G-8-1
	220H-8-1
	220J-8-1
	220K-8-1
	220L-8-1
	220M-8-1
09181-35110	220A-8-11
	220B-8-11
	220C-8-11
	220D-8-11
	220E-8-11
	220F-8-11
	220G-8-11
	220H-8-11
	220J-8-11
	220K-8-11
	220L-8-11
	220M-8-11
09181-35131	220A-10-2
	220B-10-2
	220C-10-2
	220D-10-2
	220E-10-2
	220F-10-2
	220G-10-2
	220H-10-2
	220J-10-2
	220K-10-2
	220L-10-2
	220M-10-2
09181-35132	220A-10-3
	220B-10-3
	220C-10-3
	220D-10-3
	220E-10-3
	220F-10-3
	220G-10-3
	220H-10-3
	220J-10-3
	220K-10-3
	220L-10-3
	220M-10-3
09181-35136	220A-10-5
	220B-10-5
	220C-10-5

PART NO.	FIG.NO.-REF.NO.
	220D-10-5
	220E-10-5
	220F-10-5
	220G-10-5
	220H-10-5
	220J-10-5
	220K-10-5
	220L-10-5
	220M-10-5
09181-40186	220N-6-1
	220P-6-1
	220R-6-1
	220S-6-1
	220T-6-1
	220U-6-1
09181-40190	220N-6-7
	220P-6-7
	220R-6-7
	220S-6-7
	220T-6-7
	220U-6-7
09181-40195	220N-6-11
	220P-6-11
	220R-6-11
	220S-6-11
	220T-6-11
	220U-6-11
09181-41002	220N-6-2
	220P-6-2
	220R-6-2
	220S-6-2
	220T-6-2
	220U-6-2
09181-41003	220N-6-3
	220P-6-3
	220R-6-3
	220S-6-3
	220T-6-3
	220U-6-3
09181-41004	220N-6-4
	220P-6-4
	220R-6-4
	220S-6-4
	220T-6-4
	220U-6-4
09181-41005	220N-6-5
	220P-6-5
	220R-6-5
	220S-6-5
	220T-6-5

PART NO.	FIG.NO.-REF.NO.
	220U-6-5
09181-41006	220N-6-6
	220P-6-6
	220R-6-6
	220S-6-6
	220T-6-6
	220U-6-6
09181-41008	220N-6-8
	220P-6-8
	220R-6-8
	220S-6-8
	220T-6-8
	220U-6-8
09181-41009	220N-6-9
	220P-6-9
	220R-6-9
	220S-6-9
	220T-6-9
	220U-6-9
09181-41010	220N-6-10
	220P-6-10
	220R-6-10
	220S-6-10
	220T-6-10
	220U-6-10
09181-41012	220N-6-12
	220P-6-12
	220R-6-12
	220S-6-12
	220T-6-12
	220U-6-12
09181-41013	220N-6-13
	220P-6-13
	220R-6-13
	220S-6-13
	220T-6-13
	220U-6-13
09181-41014	220N-6-14
	220P-6-14
	220R-6-14
	220S-6-14
	220T-6-14
	220U-6-14
09181-45003	220N-9-1
	220P-9-1
	220R-9-1
	220S-9-1
	220T-9-1
	220U-9-1
09181-45004	220N-9-2

PART NO.	FIG.NO.-REF.NO.
	220P-9-2
	220R-9-2
	220S-9-2
	220T-9-2
	220U-9-2
09181-45005	220N-9-3
	220P-9-3
	220R-9-3
	220S-9-3
	220T-9-3
	220U-9-3
09181-45006	220N-9-4
	220P-9-4
	220R-9-4
	220S-9-4
	220T-9-4
	220U-9-4
09181-45007	220N-9-5
	220P-9-5
	220R-9-5
	220S-9-5
	220T-9-5
	220U-9-5
09181-45008	220N-9-6
	220P-9-6
	220R-9-6
	220S-9-6
	220T-9-6
	220U-9-6
09181-45009	220N-9-7
	220P-9-7
	220R-9-7
	220S-9-7
	220T-9-7
	220U-9-7
09181-50020	220N-8-1
	220P-8-1
	220R-8-1
	220S-8-1
	220T-8-1
	220U-8-1
09181-50021	220N-8-2
	220P-8-2
	220R-8-2
	220S-8-2
	220T-8-2
	220U-8-2
09181-50022	220N-8-3
	220P-8-3
	220R-8-3

PART NO.	FIG.NO.-REF.NO.
	220S-8-3
	220T-8-3
	220U-8-3
09181-50023	220N-8-4
	220P-8-4
	220R-8-4
	220S-8-4
	220T-8-4
	220U-8-4
09181-50024	220N-8-5
	220P-8-5
	220R-8-5
	220S-8-5
	220T-8-5
	220U-8-5
09181-50025	220N-8-6
	220P-8-6
	220R-8-6
	220S-8-6
	220T-8-6
	220U-8-6
09181-50026	220N-8-7
	220P-8-7
	220R-8-7
	220S-8-7
	220T-8-7
	220U-8-7
09181-50027	220N-8-8
	220P-8-8
	220R-8-8
	220S-8-8
	220T-8-8
	220U-8-8
09181-50028	220N-8-9
	220P-8-9
	220R-8-9
	220S-8-9
	220T-8-9
	220U-8-9
09181-50029	220N-8-10
	220P-8-10
	220R-8-10
	220S-8-10
	220T-8-10
	220U-8-10
09202-04022	410A-19
	410B-19
	410C-19
	410D-19
	410E-19

PART NO.	FIG.NO.-REF.NO.	PART NO.	FIG.NO.-REF.NO.	PART NO.	FIG.NO.-REF.NO.
	410F-19		220H-31		401K-6
	410G-19		220J-31		401K-7
	410H-19		220K-31		401K-11
	410J-19		220L-31		401L-6
	410K-19		220M-31		401L-7
	410L-19	09202-06031	160N-15		401L-11
	410M-19		160P-15		401M-6
	410N-19		160R-15		401M-7
	410P-19		160S-14		401M-11
	410R-19		160T-15		401N-6
	410S-19		160U-14		401N-7
	410T-19		405N-10		401N-11
	410U-19		405P-10		401P-6
09202-05022	220A-15		405R-10		401P-7
	220B-15		405S-10		401P-11
	220C-15		405T-10		401R-6
	220D-15		405U-10		401R-7
	220E-15	09202-07002	220N-13		401R-11
	220F-15		220P-13		401S-6
	220G-15		220R-13		401S-7
	220H-15		220S-13		401S-11
	220J-15		220T-13		401T-6
	220K-15		220U-13		401T-7
	220L-15	09202-08006	401A-6		401T-11
	220M-15		401A-7		401U-6
09202-06023	405G-9		401A-11		401U-7
	405H-9		401B-6		401U-11
	405J-9		401B-7		405A-3
	405K-9		401B-11		405B-3
	405L-9		401C-6		405C-3
	405M-9		401C-7		405D-3
09202-06025	220A-30		401C-11		405E-3
	220B-30		401D-6		405F-3
	220C-30		401D-7		405G-3
	220D-30		401D-11		405H-3
	220E-30		401E-6		405J-3
	220F-30		401E-7		405K-3
	220G-30		401E-11		405L-3
	220H-30		401F-6		405M-3
	220J-30		401F-7		405N-3
	220K-30		401F-11		405P-3
	220L-30		401G-6		405R-3
	220M-30		401G-7		405S-3
09202-06027	220A-31		401G-11		405T-3
	220B-31		401H-6		405U-3
	220C-31		401H-7		407N-14
	220D-31		401H-11		407P-14
	220E-31		401J-6		407R-14
	220F-31		401J-7		407S-14
	220G-31		401J-11		407T-14

PART NO.	FIG.NO.-REF.NO.	PART NO.	FIG.NO.-REF.NO.	PART NO.	FIG.NO.-REF.NO.
	407U-14		336B-21		111R-4
09204-03003	407A-14		336C-21		111S-4
	407B-14		336E-25		111T-4
	407C-14		336F-21		111U-4
	407D-14		336J-21	09206-09012	407N-30
	407E-14		336K-21		407P-30
	407F-14	09205-03019	220A-4		407R-30
	407G-16		220B-4		407S-30
	407H-16		220C-4		407T-30
	407J-16		220D-4		407U-30
	407K-16		220E-4	09206-13019	113A-5
	407L-16		220F-4	09209-12007	220N-16
	407M-16		220G-4		220P-16
	407N-25		220H-4		220R-16
	407P-25		220J-4		220S-16
	407R-25		220K-4		220T-16
	407S-25		220L-4		220U-16
	407T-25		220M-4	09248-10008	407A-6
	407U-25	09205-03021	206A-7		407B-6
09205-02004	206A-8		206B-7		407C-6
	206B-8		206C-7		407D-6
	206C-8		206D-7		407E-6
	206D-8		206E-7		407F-6
	206E-8		206F-7		407G-6
	206F-8		206G-7		407H-6
	206G-8		206H-7		407J-6
	206H-8		206J-7		407K-6
	206J-8		206K-7		407L-6
	206K-8		206L-7		407M-6
	206L-8		206M-7		407N-15
	206M-8		210A-13		407P-15
09205-02006	210A-12		210B-13		407R-15
	210B-12		210C-13		407S-15
	210C-12		210D-13		407T-15
	210D-12		210E-13		407U-15
	210E-12		210F-13	09248-12009	180A-5
	210F-12	09206-08001	111A-4		180B-5
09205-02013	206A-6		111B-4		180C-5
	206B-6		111C-4		180D-5
	206C-6		111D-4		180E-5
	206D-6		111E-4		180F-5
	206E-6		111F-4		180G-5
	206F-6		111G-4		180H-5
	206G-6		111H-4		180J-5
	206H-6		111J-4		180K-5
	206J-6		111K-4		180L-5
	206K-6		111L-4		180M-5
	206L-6		111M-4		180N-5
	206M-6		111N-4		180P-5
09205-03012	336A-25		111P-4		180R-5

PART NO.	FIG.NO.-REF.NO.	PART NO.	FIG.NO.-REF.NO.	PART NO.	FIG.NO.-REF.NO.
	180S-5		220H-23		220K-5
	180T-5		220J-23		220L-5
	180U-5		220K-23		220M-5
09250-40002	326B-8		220L-23	09265-25046	220N-3
	326J-8		220M-23		220P-3
	326K-8	09263-22020	220A-21		220R-3
09251-07003	432A-12		220B-21		220S-3
09260-10005	206A-14		220C-21		220T-3
	206B-14		220D-21		220U-3
	206C-14		220E-21	09265-30004	407A-3
	206D-14		220F-21		407B-3
	206E-14		220G-21		407C-3
	206F-14		220H-21		407D-3
	206G-14		220J-21		407E-3
	206H-14		220K-21		407F-3
	206J-14		220L-21		407G-3
	206K-14		220M-21		407H-3
	206L-14	09263-22039	407A-2		407J-3
	206M-14		407B-2		407K-3
	210A-14		407C-2		407L-3
	210B-14		407D-2		407M-3
	210C-14		407E-2	09265-50003	220N-7
	210D-14		407F-2		220P-7
	210E-14		407G-2		220R-7
	210F-14		407H-2		220S-7
09260-10006	444A-55		407J-2		220T-7
	444B-56		407K-2		220U-7
	444C-56		407L-2	09280-08005	206A-3
	444D-55		407M-2		206B-3
	444E-55	09263-28016	407N-2		206C-3
	444F-56		407P-2		206D-3
	444G-56		407R-2		206E-3
	444H-56		407S-2		206F-3
	444J-56		407T-2		206G-3
	444K-56		407U-2		206H-3
	570A-55	09263-28047	220N-21		206J-3
	570B-55		220P-21		206K-3
	570C-55		220R-21		206L-3
	570D-55		220S-21		206M-3
	570E-55		220T-21	09280-08008	210A-15
	570F-55		220U-21		210B-15
	570G-55	09265-20015	220A-5		210C-15
	570H-55		220B-5		210D-15
09262-35070	220A-23		220C-5		210E-15
	220B-23		220D-5		210F-15
	220C-23		220E-5	09280-09008	180A-16
	220D-23		220F-5		180B-16
	220E-23		220G-5		180C-16
	220F-23		220H-5		180D-16
	220G-23		220J-5		180E-16

PART NO.	FIG.NO.-REF.NO.	PART NO.	FIG.NO.-REF.NO.	PART NO.	FIG.NO.-REF.NO.
	180F-16	09280-26005	146A-3		220B-24
	180G-16	09280-26006	111A-15		220C-24
	180H-16		111B-15		220D-24
	180J-16		111C-15		220E-24
	180K-16		111D-15		220F-24
	180L-16		111E-15		220G-24
	180M-16		111F-15		220H-24
	180N-16		111G-15		220J-24
	180P-16		111H-15		220K-24
	180R-16		111J-15		220L-24
	180S-16		111K-15		220M-24
	180T-16		111L-15	09280-97001	220N-22
	180U-16		111M-15		220P-22
09280-11001	206A-4		111N-15		220R-22
	206B-4		111P-15		220S-22
	206C-4		111R-15		220T-22
	206D-4		111S-15		220U-22
	206E-4		111T-15	09282-17005	220A-27
	206F-4		111U-15		220B-27
	206G-4		162A-4		220C-27
	206H-4		162B-4		220D-27
	206J-4		162C-4		220E-27
	206K-4		162D-4		220F-27
	206L-4		162E-4		220G-27
	206M-4		162F-4		220H-27
09280-12008	175A-6		162G-4		220J-27
09280-15003	210A-16		162H-4		220K-27
	210B-16		162J-4		220L-27
	210C-16		162K-4		220M-27
	210D-16		162L-4	09282-17011	401A-16
	210E-16		162M-4		401B-16
	210F-16		162N-4		401C-16
09280-22019	111A-6		162P-4		401D-16
	111B-6		162R-4		401E-16
	111C-6		162S-4		401F-16
	111D-6		162T-4		401G-16
	111E-6		162U-4		401H-16
	111F-6	09280-46004	220N-28		401J-16
	111G-6		220P-28		401K-16
	111H-6		220R-28		401L-16
	111J-6		220S-28		401M-16
	111K-6		220T-28		401N-16
	111L-6		220U-28		401P-16
	111M-6	09280-69001	210A-17		401R-16
	111N-6		210B-17		401S-16
	111P-6		210C-17		401T-16
	111R-6		210D-17		401U-16
	111S-6		210E-17	09282-22007	220N-29
	111T-6		210F-17		220P-29
	111U-6	09280-75001	220A-24		220R-29

PART NO.	FIG.NO.-REF.NO.	PART NO.	FIG.NO.-REF.NO.	PART NO.	FIG.NO.-REF.NO.
	220S-29		410D-20		144U-3
	220T-29		410E-20	09320-08076	143A-32
	220U-29		410F-20		143B-32
09282-28002	220N-23		410G-20		143C-32
	220P-23		410H-20		143D-32
	220R-23		410J-20		143E-32
	220S-23		410K-20		143F-32
	220T-23		410L-20		143G-32
	220U-23		410M-20		143H-32
09282-39001	336A-16		410N-20		143J-32
	336B-12		410P-20		143K-32
	336C-12		410R-20		143L-32
	336D-16		410S-20		143M-32
	336E-16		410T-20		143N-32
	336F-12		410U-20		143P-32
	336G-16	09320-08021	322A-6		143R-32
	336H-16		322B-6		143S-32
	336J-12		322C-6		143T-32
	336K-12		322D-6		143U-32
	336L-16		322E-6	09320-09016	310A-6
	336M-16		322F-6	09320-09039	143A-28
	336N-16		322G-6		143B-28
	336P-16		322H-6		143C-28
	336R-16		322J-6		143D-28
	336S-16		322K-6		143E-28
	336T-16		322L-6		143F-28
	336U-16		322M-6		143G-28
09283-37005	116A-11		322N-6		143H-28
09284-08003	210A-18		322P-6		143J-28
	210B-18		322R-6		143K-28
	210C-18		322S-6		143L-28
	210D-18		322T-6		143M-28
	210E-18		322U-6		143N-28
	210F-18	09320-08062	144A-3		143P-28
09289-05012	121A-15		144B-3		143R-28
09289-22007	220A-22		144C-3		143S-28
	220B-22		144D-3		143T-28
	220C-22		144E-3		143U-28
	220D-22		144F-3	09320-09501	136A-3
	220E-22		144G-3	09320-11013	410A-10
	220F-22		144H-3		410B-10
	220G-22		144J-3		410C-10
	220H-22		144K-3		410D-10
	220J-22		144L-3		410E-10
	220K-22		144M-3		410F-10
	220L-22		144N-3		410G-10
	220M-22		144P-3		410H-10
09306-13007	410A-20		144R-3		410J-10
	410B-20		144S-3		410K-10
	410C-20		144T-3		410L-10

PART NO.	FIG.NO.-REF.NO.	PART NO.	FIG.NO.-REF.NO.	PART NO.	FIG.NO.-REF.NO.
	410M-10		162G-12		162N-13
	410N-10		162H-12		162P-13
	410P-10		162J-12		162R-13
	410R-10		162K-12		162S-13
	410S-10		162L-12		162T-13
	410T-10		162M-12		162U-13
	410U-10		162N-12	09362-09008	407N-17
09343-70503-080	146A-12		162P-12		407P-17
09352-50823-00B	143A-29		162R-12		407R-17
	143B-29		162S-12		407S-17
	143C-29		162T-12		407T-17
	143D-29		162U-12		407U-17
	143E-29		507A-2	09367-06006	507A-4
	143F-29		507A-3	09367-08001	432A-13
	143G-29	09352-70103-600	204A-19	09380-12002	337A-24
	143H-29		204B-19		337B-24
	143J-29		204C-19		337C-24
	143K-29		204D-19		337D-24
	143L-29		204E-19		337E-24
	143M-29		204F-19		337F-24
	143N-29		204G-19		337G-24
	143P-29		204H-19		337H-24
	143R-29		204J-19		337J-24
	143S-29		204K-19		337K-22
	143T-29		204L-19		337L-22
	143U-29		204M-19		337M-22
09352-50901-600	410A-21		204N-19		337N-22
	410B-21		204P-19		337P-22
	410C-21		204R-19		337R-22
	410D-21		204S-19		339A-14
	410E-21		204T-19		339B-14
	410F-21		204U-19		339C-14
	410G-21	09355-40805-600	407N-16	09380-38003	336A-18
	410H-21		407P-16		336B-14
	410J-21		407R-16		336C-14
	410K-21		407S-16		336D-18
	410L-21		407T-16		336E-18
	410M-21		407U-16		336F-14
	410N-21	09359-50901-980	162A-13		336G-18
	410P-21		162B-13		336H-18
	410R-21		162C-13		336J-14
	410S-21		162D-13		336K-14
	410T-21		162E-13		336L-18
	410U-21		162F-13		336M-18
09352-50903-600	162A-12		162G-13		336N-18
	162B-12		162H-13		336P-18
	162C-12		162J-13		336R-18
	162D-12		162K-13		336S-18
	162E-12		162L-13		336T-18
	162F-12		162M-13		336U-18

PART NO.	FIG.NO.-REF.NO.	PART NO.	FIG.NO.-REF.NO.	PART NO.	FIG.NO.-REF.NO.
09381-18002	116A-4		143H-30		432A-14
09385-06012	204A-11		143J-30	09401-11425	144A-8
	204A-23		143K-30		144B-8
	204B-11		143L-30		144C-8
	204B-23		143M-30		144D-8
	204C-11		143N-30		144E-8
	204C-23		143P-30		144F-8
	204D-11		143R-30		144G-8
	204D-23		143S-30		144H-8
	204E-11		143T-30		144J-8
	204E-23		143U-30		144K-8
	204F-11	09401-08413	162A-14		144L-8
	204F-23		162B-14		144M-8
	204G-11		162C-14		144N-8
	204G-23		162D-14		144P-8
	204H-11		162E-14		144R-8
	204H-23		162F-14		144S-8
	204J-11		162G-14		144T-8
	204J-23		162H-14		144U-8
	204K-11		162J-14	09401-15414	111A-23
	204K-23		162K-14		111B-23
	204L-11		162L-14		111C-23
	204L-23		162M-14		111D-23
	204M-11		162N-14		111E-23
	204M-23		162P-14		111F-23
	204N-11		162R-14		111G-23
	204N-23		162S-14		111H-23
	204P-11		162T-14		111J-23
	204P-23		162U-14		111K-23
	204R-11		507A-5		111L-23
	204R-23	09401-10415	162A-15		111M-23
	204S-11		162B-15		111N-23
	204S-23		162C-15		111P-23
	204T-11		162D-15		111R-23
	204T-23		162E-15		111S-23
	204U-11		162F-15		111T-23
	204U-23		162G-15		111U-23
09387-52001	220N-25		162H-15	09401-25406	162A-9
	220P-25		162J-15		162B-9
	220R-25		162K-15		162C-9
	220S-25		162L-15		162D-9
	220T-25		162M-15		162E-9
	220U-25		162N-15		162F-9
09401-08412	143A-30		162P-15		162G-9
	143B-30		162R-15		162H-9
	143C-30		162S-15		162J-9
	143D-30		162T-15		162K-9
	143E-30		162U-15		162L-9
	143F-30	09401-11423	146A-6		162M-9
	143G-30		146A-18		162N-9

PART NO.	FIG.NO.-REF.NO.	PART NO.	FIG.NO.-REF.NO.	PART NO.	FIG.NO.-REF.NO.
	162P-9		111U-24		322K-19
	162R-9	09407-08401	530A-8		322L-20
	162S-9		530A-30		322M-20
	162T-9		530B-8		322N-20
	162U-9		530B-30		322P-20
09403-07340	315A-7		530C-8		322R-20
	315C-7		530C-30		322S-20
	315D-13		530D-8		322T-20
	315E-7		530D-30		322U-20
	315F-7		530E-8	09407-14407	315A-9
	315G-13		530E-30		315C-9
	315H-13		530F-8		315D-16
	315L-13		530F-30		315E-9
	315M-13		530G-8		315F-9
	315N-13		530G-30		315G-16
	315P-13		530H-8		315H-16
	315R-13		530H-30		315L-16
	315S-13	09407-10404	326A-4		315M-16
	315T-13		326B-4		315N-16
	315U-13		326C-4		315P-16
09403-11320	146A-17		326D-4		315R-16
09403-11321	315D-14		326E-4		315S-16
	315G-14		326F-4		315T-16
	315H-14		326G-4		315U-16
	315L-14		326H-4		322A-20
	315M-14		326J-4		322B-20
	315N-14		326K-4		322C-20
	315P-14		326L-4		322D-21
	315R-14		326M-4		322E-20
	315S-14		326N-4		322F-20
	315T-14		326P-4		322G-21
	315U-14		326R-4		322H-21
09403-13408	303A-10		326S-4		322J-20
09403-17303	111A-24		326T-4		322K-20
	111B-24		326U-4		322L-21
	111C-24		407N-18		322M-21
	111D-24		407P-18		322N-21
	111E-24		407R-18		322P-21
	111F-24		407S-18		322R-21
	111G-24		407T-18		322S-21
	111H-24		407U-18		322T-21
	111J-24	09407-14403	322A-19		322U-21
	111K-24		322B-19		502A-6
	111L-24		322C-19		502A-18
	111M-24		322D-20		502B-6
	111N-24		322E-19		502B-18
	111P-24		322F-19		502C-6
	111R-24		322G-20		502C-18
	111S-24		322H-20		502D-6
	111T-24		322J-19		502D-18

PART NO.	FIG.NO.-REF.NO.
	502E-6
	502E-18
	502F-6
	502F-18
	502G-6
	502G-18
	502H-6
	502H-18
	502J-6
	502J-18
	502K-6
	502K-18
	502L-6
	502L-18
	502M-6
	502M-18
	502N-6
	502N-18
	502P-6
	502P-18
	502R-6
	502R-18
	502S-6
	502S-18
	502T-6
	502T-18
	502U-6
	502U-18
09407-18402	322A-25
	322B-25
	322C-25
	322D-26
	322E-25
	322F-25
	322G-26
	322H-26
	322J-25
	322K-25
	322L-26
	322M-26
	322N-26
	322P-26
	322R-26
	322S-26
	322T-26
	322U-26
09407-25402	410A-25
	410B-25
	410C-25
	410D-25

PART NO.	FIG.NO.-REF.NO.
	410E-25
	410F-25
	410G-25
	410H-25
	410J-25
	410K-25
	410L-25
	410M-25
	410N-25
	410P-25
	410R-25
	410S-25
	410T-25
	410U-25
	507A-7
09408-00043	143A-33
	143B-33
	143C-33
	143D-33
	143E-33
	143F-33
	143G-33
	143H-33
	143J-33
	143K-33
	143L-33
	143M-33
	143N-33
	143P-33
	143R-33
	143S-33
	143T-33
	143U-33
09408-00121	143A-34
	143B-34
	143C-34
	143D-34
	143E-34
	143F-34
	143G-34
	143H-34
	143J-34
	143K-34
	143L-34
	143M-34
	143N-34
	143P-34
	143R-34
	143S-34
	143T-34

PART NO.	FIG.NO.-REF.NO.
	143U-34
09408-00145	143A-35
	143B-35
	143C-35
	143D-35
	143E-35
	143F-35
	143G-35
	143H-35
	143J-35
	143K-35
	143L-35
	143M-35
	143N-35
	143P-35
	143R-35
	143S-35
	143T-35
	143U-35
	146A-19
09408-00174	144A-9
	144B-9
	144C-9
	144D-9
	144E-9
	144F-9
	144G-9
	144H-9
	144J-9
	144K-9
	144L-9
	144M-9
	144N-9
	144P-9
	144R-9
	144S-9
	144T-9
	144U-9
09408-00175	162A-16
	162B-16
	162C-16
	162D-16
	162E-16
	162F-16
	162G-16
	162H-16
	162J-16
	162K-16
	162L-16
	162M-16

PART NO.	FIG.NO.-REF.NO.
	162N-16
	162P-16
	162R-16
	162S-16
	162T-16
	162U-16
09408-00184	326A-5
	326B-5
	326C-5
	326D-5
	326E-5
	326F-5
	326G-5
	326H-5
	326J-5
	326K-5
	326L-5
	326M-5
	326N-5
	326P-5
	326R-5
	326S-5
	326T-5
	326U-5
09409-05312-6GS	432A-15
09420-04006	160A-20
	160B-20
	160C-20
	160D-20
	160E-20
	160F-20
	160G-20
	160H-20
	160J-20
	160K-20
	160L-20
	160M-20
09420-04008	303A-4
09420-04009	160N-16
	160P-16
	160R-16
	160S-15
	160T-16
	160U-15
09440-06037	444A-60
	444B-61
	444C-61
	444D-60
	444E-60
	444F-61

PART NO.	FIG.NO.-REF.NO.
	444G-61
	444H-61
	444J-61
	444K-61
	570A-74
	570B-75
	570C-74
	570D-75
	570E-75
	570F-75
	570G-75
	570H-75
09440-07033	210A-19
	210B-19
	210C-19
	210D-19
	210E-19
	210F-19
09440-07078	206A-15
	206B-15
	206C-15
	206D-15
	206E-15
	206F-15
	206G-15
	206H-15
	206J-15
	206K-15
	206L-15
	206M-15
09440-08043	220A-17
	220B-17
	220C-17
	220D-17
	220E-17
	220F-17
	220G-17
	220H-17
	220J-17
	220K-17
	220L-17
	220M-17
09440-11020	220N-15
	220P-15
	220R-15
	220S-15
	220T-15
	220U-15
09440-12027	444A-40
	444B-40

PART NO.	FIG.NO.-REF.NO.
	444C-40
	444D-40
	444E-40
	444F-40
	444G-40
	444H-40
	444J-40
	444K-40
	570A-39
	570B-39
	570C-39
	570D-39
	570E-39
	570F-39
	570G-39
	570H-39
09440-40002	220A-18
	220B-18
	220C-18
	220D-18
	220E-18
	220F-18
	220G-18
	220H-18
	220J-18
	220K-18
	220L-18
	220M-18
09440-49004	220N-18
	220P-18
	220R-18
	220S-18
	220T-18
	220U-18
09443-10043	336D-31
	336G-31
	336H-31
	336L-27
	336M-27
	336N-31
	336P-27
	336R-31
	336S-31
	336T-27
	336U-27
09471-12028	502A-4
	502B-4
	502C-4
	502D-4
	502E-4

PART NO.	FIG.NO.-REF.NO.
	502F-4
	502G-4
	502H-4
	502J-4
	502K-4
	502L-4
	502M-4
	502N-4
	502P-4
	502R-4
	502S-4
	502T-4
	502U-4
09471-12077	460A-4
	460B-4
	460C-4
	460D-4
	460E-6
	460F-4
	460G-4
	460H-6
	502A-21
	502A-23
	502B-21
	502C-21
	502D-21
	502D-23
	502E-21
	502E-23
	502F-21
	502G-21
	502G-23
	502H-21
	502H-23
	502J-21
	502K-21
	502L-21
	502M-21
	502N-21
	502N-23
	502P-21
	502R-21
	502R-23
	502S-21
	502S-23
	502T-21
	502U-21
09471-12103	460E-4
	460H-4
	502A-9

PART NO.	FIG.NO.-REF.NO.
	502A-13
	502A-15
	502A-19
	502B-9
	502B-13
	502B-15
	502B-19
	502C-9
	502C-13
	502C-15
	502C-19
	502D-9
	502D-13
	502D-15
	502D-19
	502E-9
	502E-13
	502E-15
	502E-19
	502F-9
	502F-13
	502F-15
	502F-19
	502G-9
	502G-13
	502G-15
	502G-19
	502H-9
	502H-13
	502H-15
	502H-19
	502J-9
	502J-13
	502J-15
	502J-19
	502K-9
	502K-13
	502K-15
	502K-19
	502L-9
	502L-13
	502L-15
	502L-19
	502M-9
	502M-13
	502M-15
	502M-19
	502N-9
	502N-13
	502N-15

PART NO.	FIG.NO.-REF.NO.
	502N-19
	502P-9
	502P-13
	502P-15
	502P-19
	502R-9
	502R-13
	502R-15
	502R-19
	502S-9
	502S-13
	502S-15
	502S-19
	502T-9
	502T-13
	502T-15
	502T-19
	502U-9
	502U-13
	502U-15
	502U-19
09471-12108	460A-2
	460B-2
	460C-2
	460D-2
	460E-2
	460F-2
	460G-2
	460H-2
	502A-2
	502B-2
	502C-2
	502D-2
	502E-2
	502F-2
	502G-2
	502H-2
	502J-2
	502K-2
	502L-2
	502M-2
	502N-2
	502P-2
	502R-2
	502S-2
	502T-2
	502U-2
09481-05501	502A-30
	502A-32
	502B-28

PART NO.	FIG.NO.-REF.NO.
	502B-30
	502C-28
	502C-30
	502D-30
	502D-32
	502E-30
	502E-32
	502F-28
	502F-30
	502G-30
	502G-32
	502H-30
	502H-32
	502J-28
	502J-30
	502K-28
	502K-30
	502L-28
	502L-30
	502M-28
	502M-30
	502N-30
	502N-32
	502P-28
	502P-30
	502R-30
	502R-32
	502S-30
	502S-32
	502T-28
	502T-30
	502U-28
	502U-30
	503A-10
	503D-10
	503E-10
	503G-10
	503H-10
	503N-10
	503R-10
	503S-10
09481-10501	521A-5
	521B-3
	521C-3
	521D-5
	521E-5
	521F-3
	521G-5
	521H-5
	521J-3

PART NO.	FIG.NO.-REF.NO.
	521K-3
	521L-3
	521M-3
	521N-5
	521P-3
	521R-5
	521S-5
	521T-3
	521U-3
09481-15501	322A-12
	322B-12
	322C-12
	322D-12
	322E-12
	322F-12
	322G-12
	322H-12
	322J-12
	322K-12
	322L-12
	322M-12
	322N-12
	322P-12
	322R-12
	322S-12
	322T-12
	322U-12
09481-30401	322A-14
	322B-14
	322C-14
	322D-14
	322E-14
	322F-14
	322G-14
	322H-14
	322J-14
	322K-14
	322L-14
	322M-14
	322N-14
	322P-14
	322R-14
	322S-14
	322T-14
	322U-14
09481-30501	322A-13
	322B-13
	322C-13
	322D-13
	322E-13

PART NO.	FIG.NO.-REF.NO.
	322F-13
	322G-13
	322H-13
	322J-13
	322K-13
	322L-13
	322M-13
	322N-13
	322P-13
	322R-13
	322S-13
	322T-13
	322U-13
09482-00446	111A-28
	111B-28
	111C-28
	111D-28
	111E-28
	111F-28
	111G-28
	111H-28
	111J-28
	111K-28
	111L-28
	111M-28
	111N-28
	111P-28
	111R-28
	111S-28
	111T-28
	111U-28
09800-81812	420A-16
	420B-16
	420C-16
	420D-16
	420E-16
	420F-16
	420G-16
	420H-16
	420J-16
	420K-16
	420L-16
	420M-16
	420N-16
	420P-16
	420R-16
	420S-16
	420T-16
	420U-16

SUZUKI **DF40A/50A/60A** PARTS CATALOGUE

SUZUKI MOTOR CORPORATION All rights reserved
No part of this document may be reproduced or transmitted in any form or by any means, electronic or mechanical, for any purpose, without the express written permission of Suzuki Motor Corporation.

SUZUKI MOTOR CORPORATION
Technical Readiness Group, Quality Administration Department
300 Takatsuka, Minami, Hamamatsu, Japan

Reprint Prohibited

SUZUKI MOTOR CORPORATION

PRINTED IN JAPAN

9900B-45327